Milesight

AM304L&AM305L

Indoor Ambiance Monitoring Sensor

User Guide

14 rue Edouard Petit
42000 St-Etienne

Tel : +33 477 92 03 56
Email : contact@rg2i.com

www.rg2i.com

Contents

Chapter 1. Preface **4**

Chapter 2. Product Introduction **6**

Overview 6

Packing List 6

Hardware Component 7

Hardware Overview 7

Button and Traffic Light 8

Dimensions 8

Chapter 3. Hardware Installation **9**

Power Supply 9

Installation 11

Fixed by 3M Tape 11

Fixed by Screws 12

Chapter 4. ToolBox App Configuration **14**

Access the Device 14

Synchronize Device Time 15

Configure the LoRaWAN® Parameters 17

Configure the Joining Type and the Frequency 17

Configure Other LoRaWAN® Parameters 20

Configure the Milesight D2D Parameters 23

Configure the Device Parameters 26

Change the Device Password 26

Configure the Basic Device Parameters 27

Configure the Data Storage & Retransmission 30

Configure the Calibration Parameters 32

Configure the Threshold Parameters 35

Maintain the Device 39

Upgrade....39
Configure a Template for Configuration Backup....40
Reset the Device....43
Chapter 5. Uplink Packets and Downlink Commands....45
Uplink Packets....45
Basic Information Packet....45
Periodically Reported Data Packet....46
Alarm Report....47
Downlink Commands....49
Commands for General Setting....49
Commands for Calibration Settings....51
Commands for Threshold Settings....53
Commands for D2D Setting....55
Commands for Historical Data Query....56
Chapter 6. Sensor Maintenance....59
Chapter 7. Appendix....60
Carbon Dioxide Levels and Guidelines....60
Illuminance Levels and Guidelines....60
Chapter 8. Services....61

Chapter 1. Preface

Copyright Statement

This guide may not be reproduced in any form or by any means to create any derivative such as translation, transformation, or adaptation without the prior written permission of Xiamen Milesight IoT Co., Ltd (Hereinafter referred to as Milesight).

Milesight reserves the right to change this guide and the specifications without prior notice. The latest specifications and user documentation for all Milesight products are available on our official website http://www.milesight.com

Safety Instruction

These instructions are intended to ensure that user can use the product correctly to avoid danger or property loss. Milesight will not shoulder responsibility for any loss or damage resulting from not following the instructions of this operating guide.

CAUTION:

Injury or equipment damage may be caused if any of these cautions are neglected.

- The device must not be disassembled or remodeled in any way.
- In order to protect the security of the device, please change device password when first configuration. The default password is 123456.
- Do not place the device outdoors where the temperature is below/above operating range. Do not place the device close to objects with naked flames, heat source (oven or sunlight), cold source, liquid and extreme temperature changes.
- The device is not intended to be used as a reference sensor, and Milesight will not should responsibility for any damage which may result from inaccurate readings.
- The device must never be subjected to shocks or impacts.
- Do not clean the device with detergents or solvents such as benzene or alcohol. To clean the device, wipe with a soft moistened cloth. Use another soft, dry cloth to wipe dry.

Revision History

Release Date	Version	Description
January 30, 2026	V 1.0	Initial version

Chapter 2. Product Introduction

This chapter describes basic product information.

Overview

AM300L series is a compact indoor ambience monitoring sensor including motion, humidity, temperature, light, CO_2 for wireless LoRaWAN® network. It is equipped with NFC (Near Field Communication) and can easily be configured via a smartphone.

Sensor data are transmitted in real-time using standard LoRaWAN® protocol. LoRaWAN® enables encrypted radio transmissions over long distance while consuming very little power. Combining Milesight LoRaWAN® gateway and Milesight Development Platform solution, users can manage all sensor data remotely.

AM300L series can be used in offices, stores, classrooms, hospitals, etc.

It has the following features:

- Integrated with multiple sensors like humidity, temperature, CO_2, light, etc.
- Support batteries or DC power supply
- Equipped with traffic light indicator to indicate device status and CO_2 threshold alarms
- Store locally historical records and support retransmission to prevent data loss
- Compliant with standard LoRaWAN® gateways and network servers
- Supports Milesight D2D protocol for ultra-low latency and direct control without gateways
- Quick and easy management with Milesight Development Platform

Packing List

This chapter describes the packing list. You can verify the contents against the following list to ensure all items are present. If any of them is missing or damaged, you can contact your sales representative.

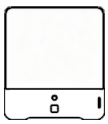

1 × AM300L Device

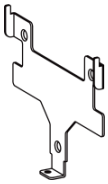

1 × Mounting Bracket

1 × 3M Double-Sided Tape

3 × Wall Mounting Kits

1 × Fixing Screw

1 × Quick Guide

1 × Warranty Card

Hardware Component

Hardware Overview

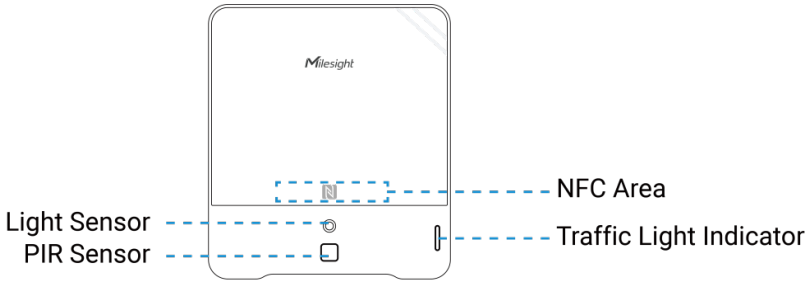

AM300L Series

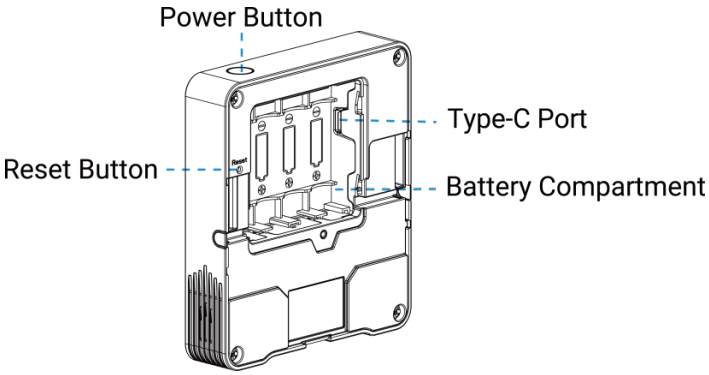

For the description of each component, refer to the following table.

Name	Description
NFC Area	Allows for wireless configuration through mobile phone NFC.
Light Sensor	Used to collect light data.
PIR Sensor	Used to collect PIR status.
Traffic Light Indicator	Indicates the device status and CO_2 level.
Power Button	Controls device power on/off.
Reset Button	Resets to factory default.

Name	Description
Type-C Port	Used to power supply or console.
Battery Compartment	Houses the battery for power supply.

Button and Traffic Light

The device support indicating device status through a traffic light. Additionally, the AM305L uses this indicator to show CO_2 concentration.

Note:
The power button features can be locked by ToolBox or downlink command.

Function	Action	Light Status
Power On/Off	Press and hold the power button for more than 3 seconds.	Power On: Off → On
		Power Off: On → Off
Reset to Factory Default	Press and hold the reset button for more than 10 seconds.	Green Quickly Blinks
CO_2 Level Indication (LED Enabled)	Indicate the 3 levels of CO_2 according to threshold setting. When the concentrations of CO_2 exceeds the threshold, the light color will change to yellow or red.	Excellent: Green Blinks
		Polluted: Yellow Blinks
		Bad: Red Blinks

Dimensions

The following figure shows the device dimensions (unit: mm).

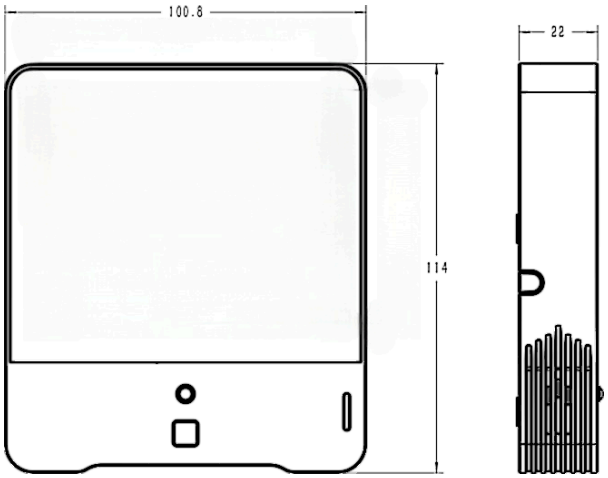

Chapter 3. Hardware Installation

This section describes how to power and install the device.

Power Supply

The device supports two power supply methods : batteries and USB (5V). This section describes how to power the device.

Powered by Batteries

The device has the built-in batteries. Before use, please remove the battery insulation sheet as instructed below.

Steps:

1. Remove the rear cover.

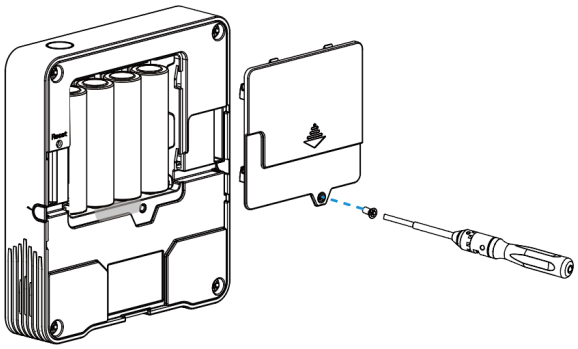

2. Take out the battery insulation sheet.

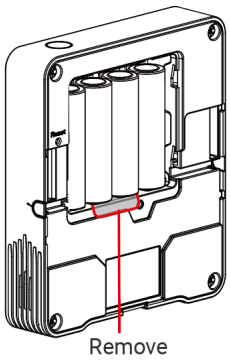

3. Fix the rear cover back to device with the fixing screw.

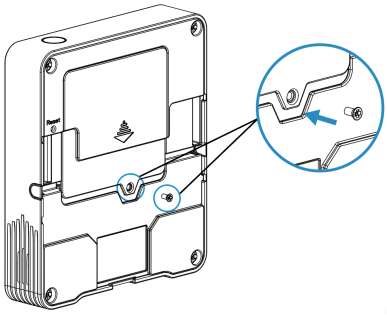

Note:

1. The device can only be powered by ER14505 Li-$SOCl_2$ batteries not alkaline batteries.
2. When replacing the batteries, ensure the battery direction is not reversed.
3. Ensure all replacing batteries are newest, otherwise it may shorten battery life or cause inaccurate power calculation.
4. The battery should be removed from the device if it is not used for an expended period.

Powered by USB (5V)

Steps:

1. Remove the rear cover, install the type-C cable to the device.
2. Make an opening on the left or right side to pass through the type-C cable.

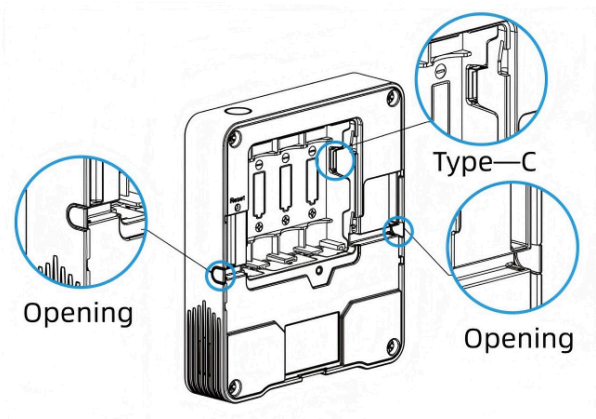

3. Fix the rear cover back to device with the fixing screw.

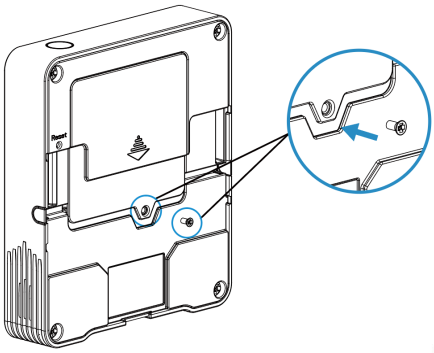

Note:

- The Type-C port can't be used to charge batteries.
- When batteries and external power are both used, external power will be the preferred power supply option.

Installation

Installation Location Requirements:

In order to ensure the best detection and LoRaWAN® communication effect, it is recommended to install devices as follows:

- There should not be any isolates or barriers in PIR and light detection range.
- Do not mount the device where the temperature is below/above operating range and temperature varies greatly.
- Stay far away from any heat source or cold source like oven, refrigerator.
- Do not mount the device close to where airflow varies greatly like windows, vent, fan and air conditioner.
- Do not mount the device upside down.
- Do not place the device right to the window or door. If you have to, you'd better pull the curtain.
- It is recommended to install at least 1.5 m high from floor.

Fixed by 3M Tape

Preparation:

- 3M Double-Sided Tape
- Mounting Bracket
- Fixing Screw

Steps:

1. Paste 3M tape to the back of the mounting bracket.
2. Tear the other side and place it on a flat surface.

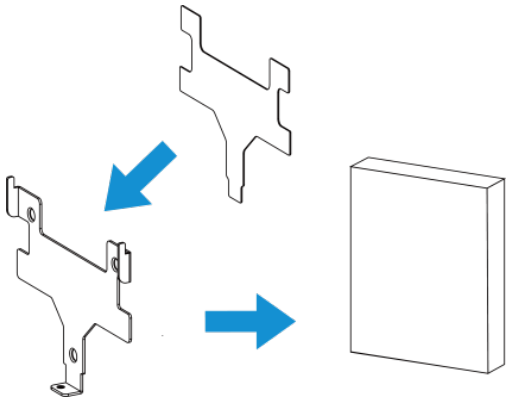

3. Put the device on the mounting bracket.
4. Fix the bottom of the device to the bracket with the theft-deterring screw.

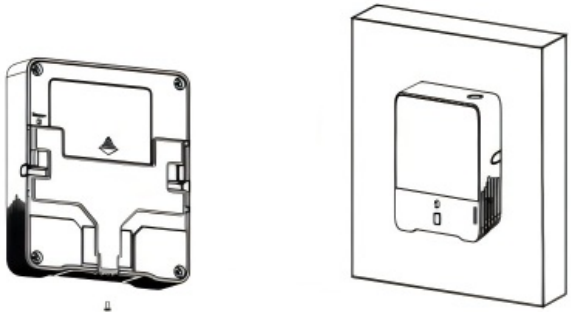

Fixed by Screws

Preparation:

- Mounting Bracket
- Wall Mounting Kits
- Fixing Screw

Steps:

1. Fix the wall plugs into the wall.
2. Fix the mounting bracket to the wall plugs with screws.

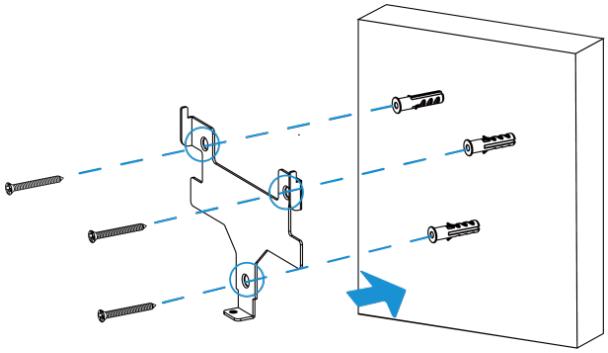

3. Put the device on the mounting bracket.
4. Fix the bottom of the device to the bracket with a fixing screw.

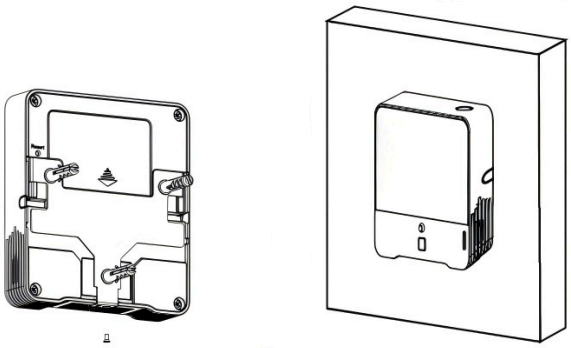

Chapter 4. ToolBox App Configuration

The Milesight ToolBox app can be used to configure the device. This chapter describes ToolBox related configuration.

Access the Device

This section describes how to access the device using NFC.

Steps:

1. Press power button for more than 3s until LED on to power on the device.
2. Download Milesight ToolBox app from Google Play or Apple Store.
3. Enable the NFC function on the smart phone.
4. Launch ToolBox.

   a. Upon first launch, the following page is displayed. Select **NFC** and click **Enter**.

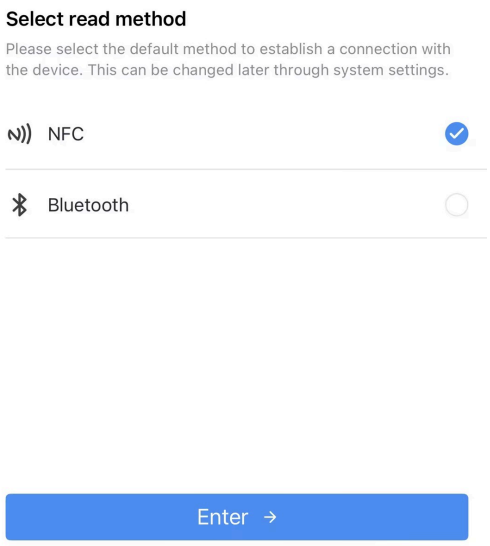

   b. Upon subsequent launches, Click **Maintenance** on the home page, and then select **NFC**.

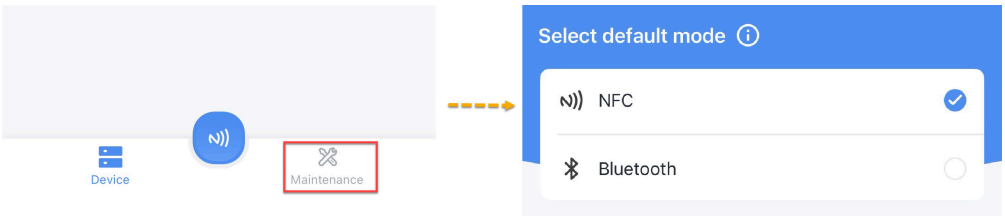

5. (Optional)To locate the NFC detection areas of the phone and the device, click **Can't find the NFC location**.

6. Put the NFC detection area of the phone close to the NFC antenna of the device.

> **Tip:**
> It is recommended to take off the phone case.

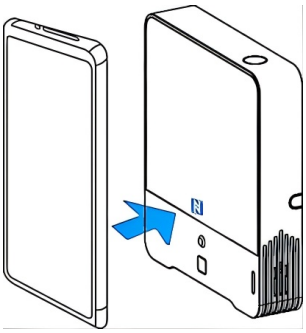

7. Click . If the device is recognized successfully, the homepage is displayed.

> **Troubleshooting:**
> If read fails, move the phone away and reposition it close to the sensor to try again.

For a description of the homepage, refer to the following table.

Item	Description
Basic Information	Shows basic device information and sync the system time.
Setting	Sets the device and network parameters.
	Imports, adds, exports or deletes a template.
	Sets the language, shows NFC positions and checks the version.

8. For the AM305L device, you need to select a calibration method for CO_2 data. Please refer to the Calibration Parameter Settings section for details.

Synchronize Device Time

This section describes how to sync the device time.

Synchronize the Time Manually Through ToolBox

The device time can be synced via Milesight ToolBox App.

Steps:

1. On the homepage of ToolBox, click **Basic Information**.
2. Click to synchronize the time.

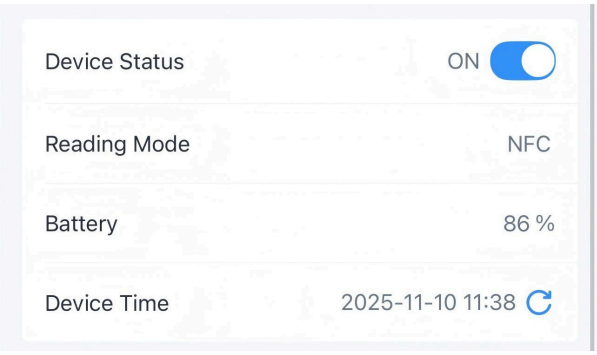

3. Put the NFC detection area of the phone close to the NFC antenna of the device. If the time is synchronized successfully, the following page is displayed.

Synchronize the Time Automatically Through a LoRaWAN® Network Server

Prerequisite: The LoRaWAN® network server supports the device time synchronization feature.

Steps:

1. Set the LoRaWAN® version of the device to **V1.0.3**. For details, refer to Configure the LoRaWAN® Parameters.
2. Connect the device to the network server. Once the device successfully joins the network, it sends a MAC command to query the time from the network server.

Note:
The device will send the DeviceTimeReq command every 5 days since the last sync.

Configure the LoRaWAN® Parameters

This section describes how to configure the device transmission parameters for the LoRaWAN® network. Among them, the joining type and the frequency must be configured. Otherwise, the device cannot join the network.

Configure the Joining Type and the Frequency

This section describes how to configure the joining type and the frequency.

Steps:

1. On the homepage of ToolBox, click **Setting** to enter the **Setting** page.
2. Click **Network**. The **Network** page is displayed, see the following figure.

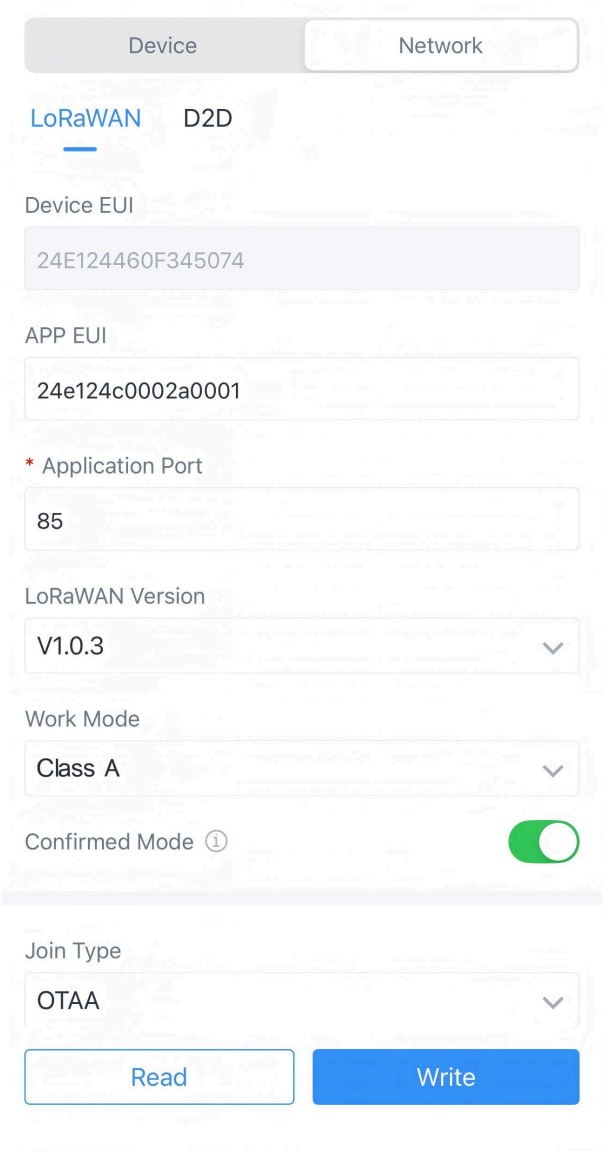

3. From the **Join Type** selection box, select **OTAA** or **ABP** as needed.

> **Note:**
> OTAA is required if you connect the device to the Milesight Development Platform.

4. Configure **Join Type** related parameters as needed. Use default values unless otherwise specified.

- If **OTAA** is selected, configure **Application Key** and **Rejoin Mode** as needed. For details, refer to the following table.

Parameter	Description
Application Key	Appkey for OTAA mode. Default: **Device EUI + Device EUI**. Example: 24e124123456789024e1241234567890. **Tip:** Contact sales before purchase if you need random App keys.
Rejoin Mode	Rejoin mode for OTAA mode. Reporting interval≤35 minutes: The device sends a specific number of LinkCheckReq MAC packets at each reporting interval or at every other reporting interval to validate connectivity. Reporting interval > 35 minutes: The device sends a specific number of LinkCheckReq MAC packets at each reporting interval to validate connectivity. If there is no response, the device will re-join the network. When **Rejoin Mode** is enabled, enter a number in the **Set the number of detection signals sent** text box. The actual sending number is the configured number +1.

- If **ABP** is selected, configure **Network Session Key**, **Application Session Key** and **Device Address** as needed. For details, refer to the following table.

Parameter	Description
Network Session Key	Nwkskey for ABP mode. Default: **5572404C696E6B4C6F52613230313823**.
Application Session Key	Appskey for ABP mode. Default: **5572404C696E6B4C6F52613230313823**.
Device Address	DevAddr for ABP mode. Default: 5th to 12th digits of SN.

5. Select a frequency from the **Support Frequency** selection box as needed. The frequency must be the same as that of the gateway configured on the gateway web GUI.
6. If **CN470**, **US915** or **AU915** is selected, enter the index of the channel that you want to enable in the **Enable Channel Index** input box. The channel indexes should be separated by commas.

   Examples:

   - 1, 40: Enables channel 1 and channel 40

   - 1-40: Enables channel 1 to channel 40

   - 1-40, 60: Enables channel 1 to channel 40 and channel 60

   - Null: Indicates that all channels are disabled
7. Click **Write** and put the NFC detection area of the phone close to the NFC antenna of device. If the configuration succeeds, the following page is displayed.

Write successfully!

Configure Other LoRaWAN® Parameters

This section describes how to configure the LoRaWAN® parameters of the device. You can use default values unless otherwise specified.

Steps:

1. On the homepage of ToolBox, click **Setting** to enter the **Setting** page.
2. Click **Network**. The **Network** page is displayed, see the following figure.

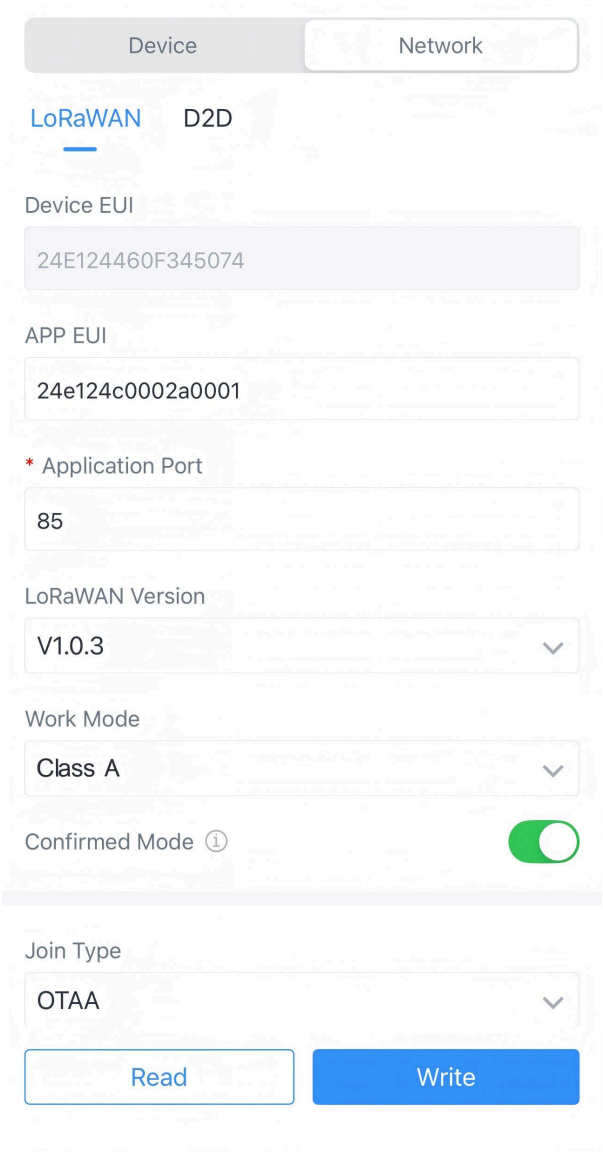

3. Configure the following parameter as needed. Use default values unless otherwise specified. For a description of the parameters, refer to the following table.

Parameter	Description
Device EUI	Unique ID of the device labelled on the device housing. **Tip:** For bulk deployments, contact sales to request the device EUI list.

Parameter	Description
App EUI	The default App EUI (join EUI) is 24E124C0002A0001.
Application Port	Port used for sending and receiving data. Default: **85**.
LoRaWAN® Version	Options: **V1.0.2**, **V1.0.3**.
Work Mode	Fix: Class A.
Confirmed Mode	If it is enabled, the device retransmits data when the device does not receive ACK packet from the network server.
Join Type	Refer to Configure the Joining Type and the Frequency.
Supported Frequency	Refer to Configure the Joining Type and the Frequency.
ADR Mode	Enables the network server to adjust the spreading factor, the bandwidth and the transmission power to optimize data rates, airtime and energy consumption in the network.
Spreading Factor	If ADR mode is disabled, the device sends uplink data using this spreading factor. A higher spreading factor increases transmission range but reduces data rate and increases power consumption. This parameter varies with **Supported Frequency**.
Tx Power	Defined by the LoRa Alliance. Specifies the strength of the radio signal transmitted by the device.
RX2 Data Rate	RX2 data rate to receive downlinks or send D2D messages.
RX2 Frequency	RX2 frequency to receive downlinks or send D2D messages. Unit: Hz

4. Click **Write** and put the NFC detection area of the phone close to the NFC antenna of device. If the configuration succeeds, the following page is displayed.

Write successfully!

Configure the Milesight D2D Parameters

Milesight D2D protocol is developed by Milesight and used for setting up transmission among Milesight devices without gateway, which is able to reduce the latency and achieve the quick control.

D2D Data Transmission Settings

The device supports sending sensor data to other Milesight devices directly via Milesight D2D. Before using this feature, please ensure that you have one or more Milesight sensors **which support D2D Data Receiving feature**.

Steps:

1. On the homepage of ToolBox, click **Setting** to enter the **Setting** page.
2. Click **Network**. Configure the **RX2 Data Rate** and **RX2 Frequency** to be the same as the data receiving devices.
3. Click **D2D**, the **D2D** page is displayed, see the following figure.

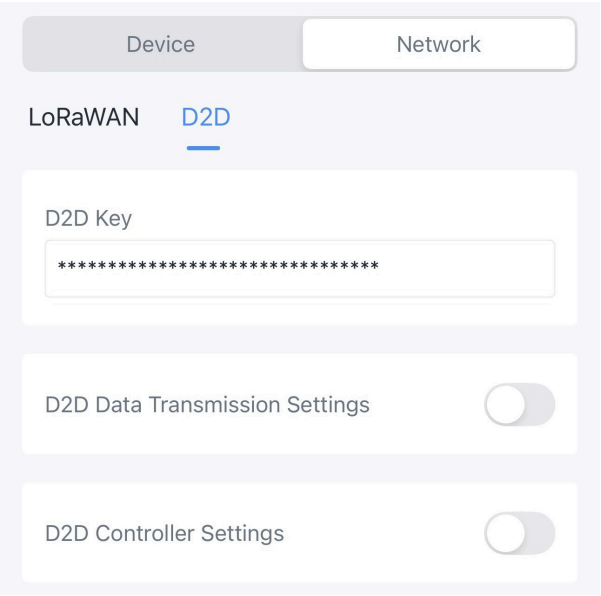

4. Set the D2D key to be the same as the Milesight sensors. (Default D2D Key: 5572404C696E6B4C6F52613230313823)
5. Enable the **D2D Data Transmission Settings**.

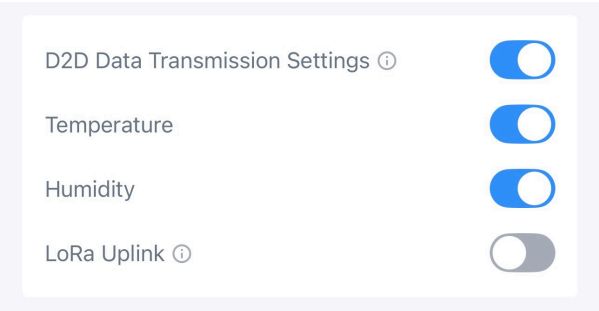

6. Enable the **Temperature** and **Humidity** data transmission as needed.

> **Note:**
> If **LoRa Uplink** is enabled, a LoRaWAN® uplink packet that contains periodically data will be sent to gateway after the Milesight D2D command packet. Otherwise, the packet will not send to LoRaWAN® gateway.

7. Click **Write** and put the NFC detection area of the phone close to the NFC antenna of device. If the configuration succeeds, the following page is displayed.

Write successfully!

Milesight D2D Controller

The device is able to work as a D2D controller device to send commands to trigger D2D agent devices when the threshold alarm is triggered or dismissed.

Requirements: Enable the PIR Collection and Illuminance Collection.

Steps:

1. On the homepage of ToolBox, click **Setting** to enter the **Setting** page.
2. Click **Network**. Configure the **RX2 Data Rate** and **RX2 Frequency** to be the same as the settings of Milesight D2D agent devices.

3. Click **D2D**, the **D2D** page is displayed, see the following figure.

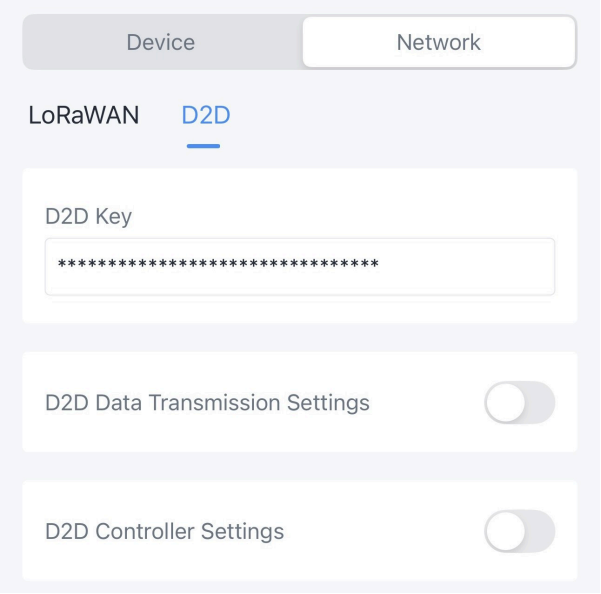

4. Define a unique D2D key to be the same as D2D agent devices. (Default D2D Key: 5572404C696E6B4C6F52613230313823)
5. Enable **D2D Controller Settings**, and enable one of statuses and configure 2-byte hexadecimal Milesight D2D command.

> **Note:**
> If **LoRa Uplink** is enabled, a LoRaWAN® uplink packet that contains corresponding alarm status will be sent to gateway after the Milesight D2D command packet. Otherwise, the packet will not send to LoRaWAN® gateway.

6. Click **Write** and put the NFC detection area of the phone close to the NFC antenna of device. If the configuration succeeds, the following page is displayed.

Write successfully!

Example: When the PIR is triggered, the device will send command ff01 to D2D agent devices.

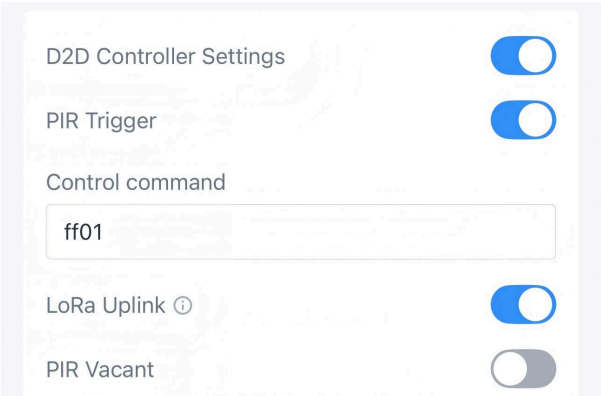

Configure the Device Parameters

This section describes how to configure the device.

Change the Device Password

It is recommended to change the device password upon initial configuration for security purposes. This section describes how to change the password.

Steps:

1. On the homepage, click **Setting** to enter the **Setting** page.
2. In the **General** page, enable **Change Password**.
3. In the **New Password** text box, enter the new password as prompted.
4. In the **Confirm Password** text box, enter the password again.
5. Click **Write** in the lower right corner and put the NFC detection area of the phone close to the NFC antenna of device. If the password was changed successfully, the following page is displayed.

Write successfully!

Configure the Basic Device Parameters

This section describes how to configure the basic parameters of the device, which includes:

- Reporting interval
- Temperature Unit
- LED Indicator
- Button Lock
- Data Storage
- Data Retransmission
- PIR Collection
- Illuminance Collection
- CO2 Collection
- Device password

Steps:

1. On the homepage of ToolBox, click **Setting** to enter the **Setting** page.
2. In the **General** page, configure the following device parameters as needed.

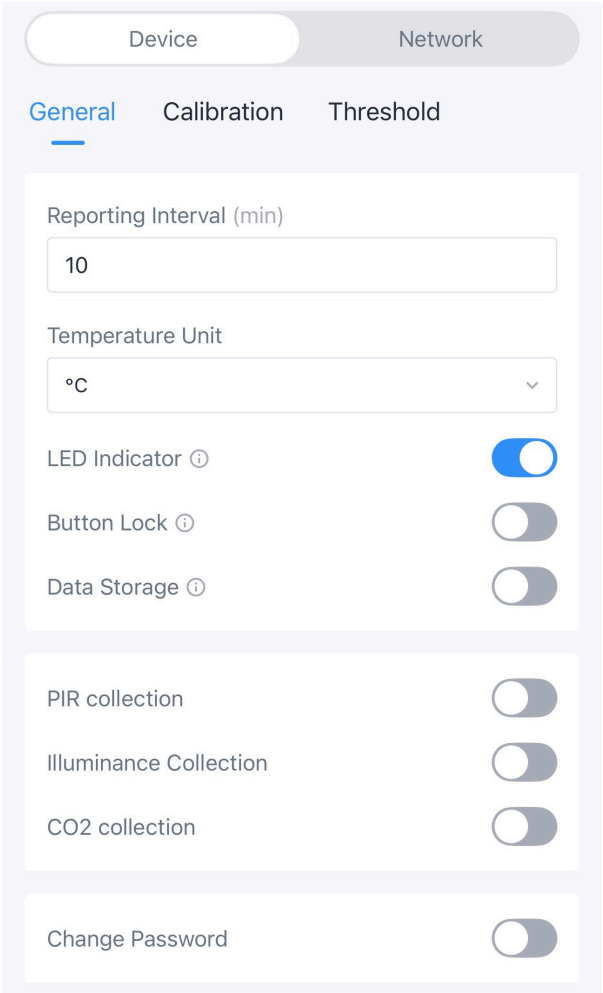

Parameters	Description
Reporting Interval	Reporting interval of transmitting current sensor values to network server. Default: 10 mins, Range: 1-1080 mins.
Temperature Unit	Change the temperature unit displayed on the ToolBox and screen.

Parameters	Description
	Note: a. The temperature unit in the reporting package is fixed as Celsius(°C). b. Please modify the threshold settings if the unit is changed.
LED Indicator	Enable or disable the traffic light indicator to indicate CO_2 level.
Button Lock	After enabled, users can choose to lock the feature of power button: refresh display, power on, power off.
Data Storage	Disables or enables data storage. For details, refer to Configure the Data Storage&Retransmission.
Data Retransmission	Disables or enables data retransmission. For details, refer to Configure the Data Storage&Retransmission.
PIR Collection	Enable or disable the PIR data collection.
PIR Trigger Reporting	Enable or disable the PIR trigger reporting. When the PIR status changes from "vacant" to "trigger", it will be reported immediately.
PIR Vacant Reporting	Enable or disable the PIR vacant reporting. After enable, a vacant status will be reported if the device is not re-triggered within a certain period of time after the initial trigger.
Time To Report Vacancy(s)	The PIR will report a "vacant" status if it is not re-triggered within the set period after a trigger. Default: 120s, Range: 60-3600s.
Illuminance Collection	Enable or disable the light data collection.
Illuminance Mode	Options: **Level** and **Illuminance Value**.
CO2 Collection	Enable or disable the CO_2 data collection.
Change Password	Change the password for ToolBox App to write this device.

3. Click **Write** in the lower right corner and put the NFC detection area of the phone close to the NFC antenna of device. If the configuration succeeds, the following page is displayed.

Write successfully!

Configure the Data Storage & Retransmission

The device supports data storage and data retransmission to ensure data integrity. This section describes how to configure data storage and retransmission.

Export the Local Data

The device supports storing up to 4,320 historical records locally. Data will continue to be saved even when the network is de-activated.

Steps:

1. Sync the time to ensure the data is stored in correct time.
2. On the homepage of ToolBox, click **Setting** to enter the **Setting** page.
3. Enable **Data Storage**.
4. Return to the homepage and click **Maintenance** in the lower right corner.
5. Select the time period to be exported.

> **Tip:**
> Since the ToolBox data export time range is limited to 14 days, you can export the complete data in segments if the time range exceeds this limit.

6. Click **Export**, select the data time range and click **Save** to export data.

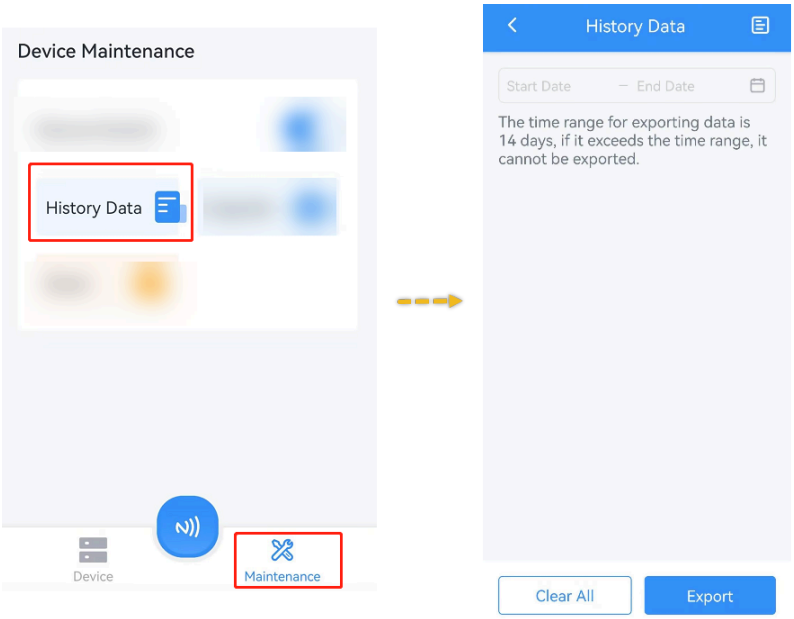

Enable Data Retransmission

Data retransmission allows the network server receives all data, even after temporary network outages. The reported format of retransmission data will include timestamps and is different from periodic report data.

Requirements: Join type is **OTAA** mode.

Steps:

1. On the homepage, click **Setting** to enter the **Setting** page.
2. Enable **Data Storage** and **Data Retransmission**.
3. Click **Network** to enter the **Network** page.
4. Enable **Rejoin Mode** and set the number of packets sent.

5. Click **Write** in the lower right corner and put the NFC detection area of the phone close to the NFC antenna of device. If the configuration succeeds, the following page is displayed.

Write successfully!

Note:

1. Data retransmission increases the uplink traffic and shortens the battery life.
2. If the device reboots or loses power during data retransmission, it restarts and resends the entire retransmission dataset after reconnecting to the network.
3. If a new network disconnection occurs during an ongoing retransmission, only the data logged during this latest outage will be sent upon reconnection.
4. The default report data retransmission interval is 600s, this can be changed via downlink command.

Query Historical Data

The device supports querying historical data for a specific time range via downlink command. The retransmission data format includes timestamps and differs from the periodic report format. For details, refer to Historical Data Query Commands.

Configure the Calibration Parameters

This section describes how to configure calibration parameters.

Numerical Calibration

Set the calibration value, the device will add calibration value to the current value, then display and report the final value.

Steps:

1. On the homepage of ToolBox, click **Setting** to enter the **Setting** page.
2. Click **Calibration**.
3. Enable the **Temperature** or **Humidity** as needed.
4. Enter a value in the **Calibration Value** text box.

5. Click **Write** in the lower right corner and put the NFC detection area of the phone close to the NFC antenna of the device. If the configuration succeeds, the following page is displayed.

Write successfully!

CO_2 Calibration (AM305L Only)

The device provides multiple calibration methods for CO_2 calibration. Among them, it is necessary to select either manual calibration or Auto Background calibration to ensure accurate readings.

Note:
If the CO_2 value is lower than 400 ppm after calibration, the device will display and report the value as 400 ppm.

Steps:

1. On the homepage of ToolBox, click **Setting** to enter the **Setting** page.
2. Click **Calibration**.
3. Enable **CO_2** and select the calibration method.

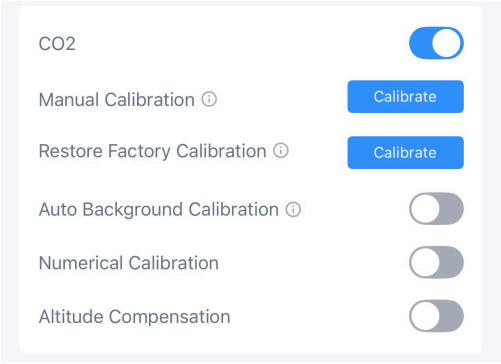

Calibration Method	Description
Manual Calibration	Put the device in an open outdoor environment for more than 10 minutes and click **Manual** button to adjust the current value as 400ppm immediately. This calibration is the fastest but it adapts to the open outdoor environment. This calibration is suitable for some applications which need to place CO_2 sensors in unventilated spaces, you can take sensors out to complete the manual calibration before installation.
Restore Factory Calibration	Clean the manual calibration and turn back to factory calibration.
Auto Background Calibration	After enabled, the device will record the offset between 400ppm and lowest CO_2 level during a calibration period

Calibration Method	Description
	of 168 hours (7 days) and add this offset to original baseline of sensor to complete the calibration. This calibration is suitable for some applications where CO_2 sensors are placed in **well ventilated or semi-ventilated areas**.
Numerical Calibration	Set the calibration value, the device will add calibration value to the current value, then display and report the final value.
Altitude Compensation	Set the altitude of the device to calculate the barometric pressure to compensate the CO_2 value.

4. Click **Write** in the lower right corner and put the NFC detection area of the phone close to the NFC antenna of the device. If the configuration succeeds, the following page is displayed.

Write successfully!

Configure the Threshold Parameters

The device supports to report temperature threshold alarm, light threshold alarm and CO_2 3-Level threshold alarm. This section describes how to configure this threshold parameters.

Temperature Threshold

The device will upload the current data once instantly when temperature is over or below the threshold. Only when the threshold is released and triggered again, the device will report the threshold packet again.

Steps:

1. On the homepage of ToolBox, click **Setting** to enter the **Setting** page.
2. Click **Threshold** and enable **Temperature**.

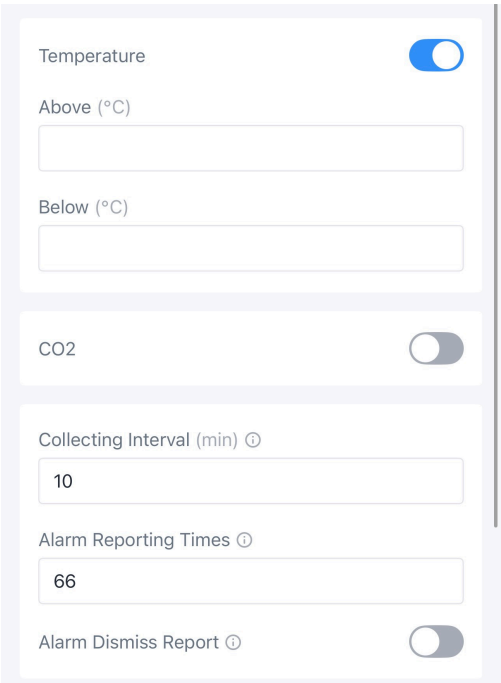

3. Configure the following threshold parameters.

Parameters	Description
Above/Below	Temperature threshold.
Collecting Interval	The interval to detect temperature value, this should be smaller than or equal to the reporting interval. Range: 1-1440mins. Default: 10.
Alarm Reporting Times	Alarm packet report times after threshold alarm triggers. Default is 1.
Alarm Dismiss Report	When enabled, the device reports the current value to signal that the alarm has cleared once the reading returns to within the threshold range.

4. Click **Write** in the lower right corner and put the NFC detection area of the phone close to the NFC antenna of the device. If the configuration succeeds, the following page is displayed.

Write successfully!

Light Threshold

The device will upload the alarm packet once instantly when light value is over or below the threshold.

Steps:

1. On the homepage of ToolBox, click **Setting** to enter the **Setting** page.
2. Click **Threshold** and enable **Light**.

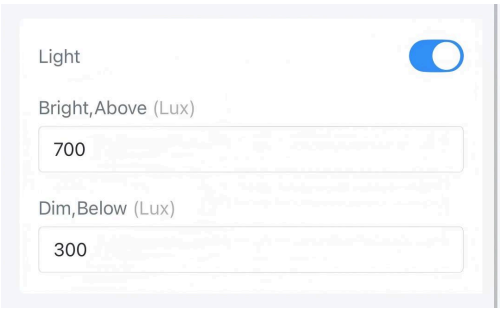

3. Configure the **Bright,Above** value and the **Dim,Below** value.

4. Click **Write** in the lower right corner and put the NFC detection area of the phone close to the NFC antenna of the device. If the configuration succeeds, the following page is displayed.

Write successfully!

CO_2 3-Level Threshold (AM305L Only)

For CO_2, it supports defining Excellent, Polluted and Bad levels. When the value reaches the Polluted or Bad threshold, the device instantly uploads an alarm packet. The LED blinks yellow for Polluted and red for Bad.

Steps:

1. On the homepage of ToolBox, click **Setting** to enter the **Setting** page.
2. Click **Threshold** and enable **CO2**.

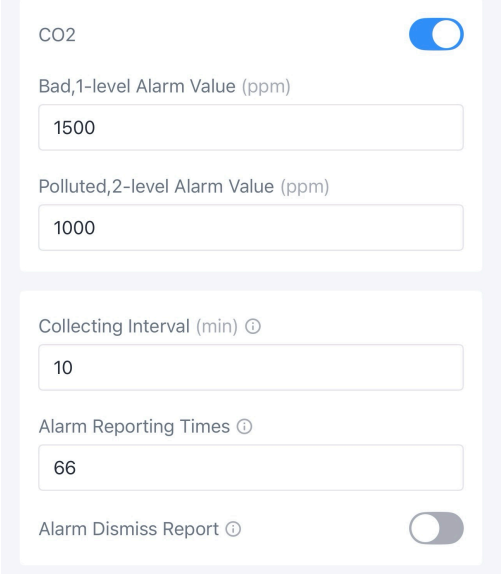

3. Configure the following threshold parameters.

Parameters	Description
Bad,1-level Alarm Value/Polluted, 2-level Alarm Value	Temperature threshold.
Collecting Interval	The interval to detect CO_2 value, this should be smaller than or equal to the reporting interval. Range: 1-1440mins. Default: 10.
Alarm Reporting Times	Alarm packet report times after threshold alarm triggers. Default is 1.
Alarm Dismiss Report	When enabled, the device reports the current value to signal that the alarm has cleared once the reading returns to within the threshold range.

4. Click **Write** in the lower right corner and put the NFC detection area of the phone close to the NFC antenna of the device. If the configuration succeeds, the following page is displayed.

Write successfully!

Maintain the Device

This section describes how to maintain the device.

Upgrade

This chapter describes how to upgrade the device. Any operation on ToolBox is not allowed during upgrading, otherwise the upgrading will be interrupted, or even the device will break down.

Steps:

1. Download firmware from Milesight official website and save it to the smart phone.
2. Launch ToolBox and click **Maintenance** in the lower right corner of the homepage.
3. Click **Upgrade** to import firmware and upgrade the device.
4. Click **Upgrade** to upgrade the device.

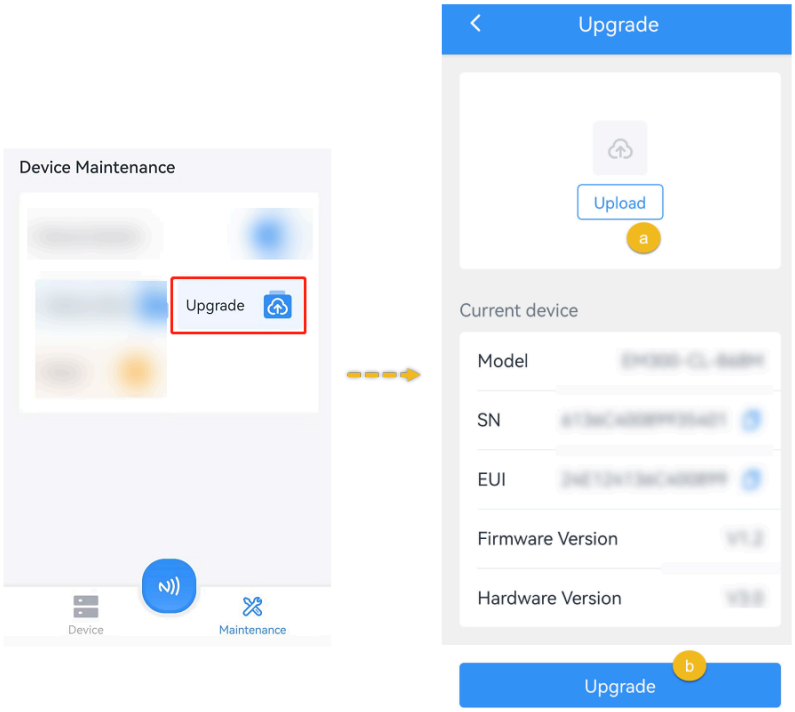

Configure a Template for Configuration Backup

This device supports configuration backup, which enables quick and easy batch configuration. This function only applies for devices of the same model.

Steps:

Set a Template

Steps:

1. Launch ToolBox App, attach the NFC area of smartphone to the device to read the configuration.
2. Edit the configuration as required, click **Set Template** to save current configuration as a template to the ToolBox App.
3. Click **Confirm** to save the current configuration as a template.

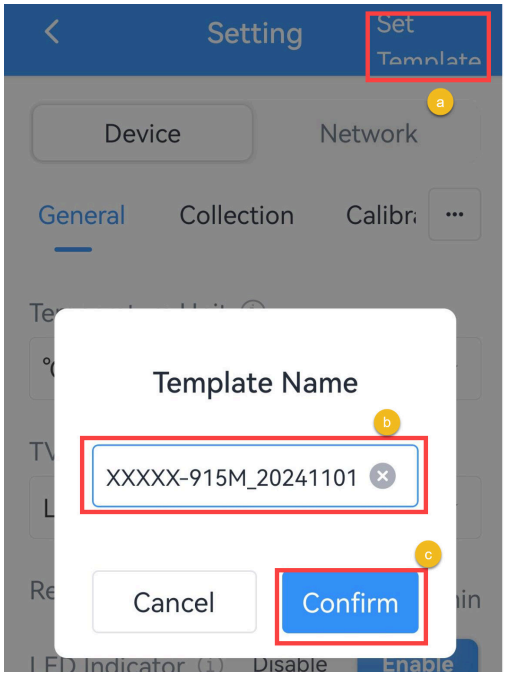

4. If the save is successfully, the following page is displayed.

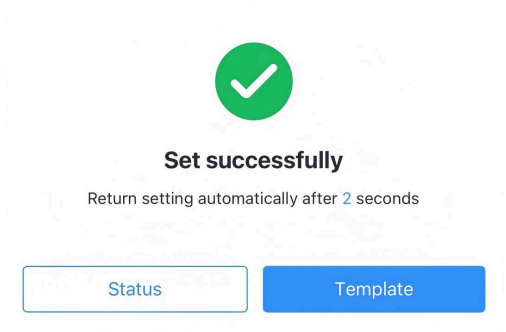

Write the template configuration to the target device

Steps:

1. Go to **Device >Template** page.

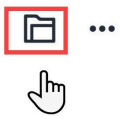

2. Click the saved template. Do not select the template.

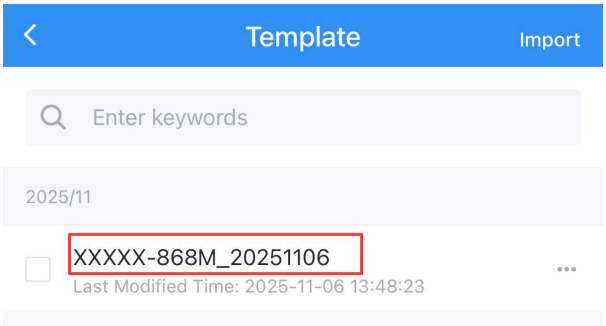

3. In the displayed page, click **Write** in the bottom and put the NFC detection area of the phone close to the NFC antenna of the target device. If the configuration is written to the target device, the following page is displayed.

Write successfully!

Export and Delete a Template

Steps:

1. Select the checkbox of the target template as shown in the following figure.

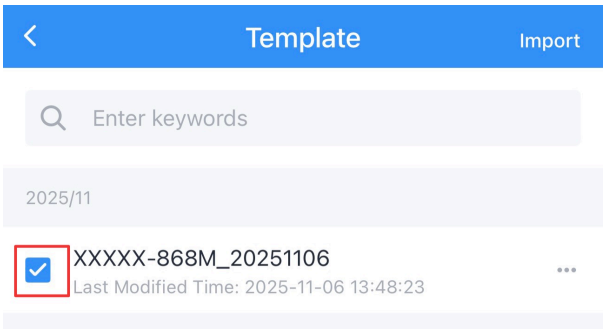

2. Click **Export** to export this template as a JSON format file and save it to the smart phone.
3. Click **Delete** and Confirm to delete this template from ToolBox.

Reset the Device

This section describes how to reset the device in ToolBox. Additionally, the device supports hardware reset. See Button Descriptions for details.

Steps:

1. On the homepage of ToolBox, click **Maintenance** in the lower right corner. The **Maintenance** page is displayed, see the following figure.

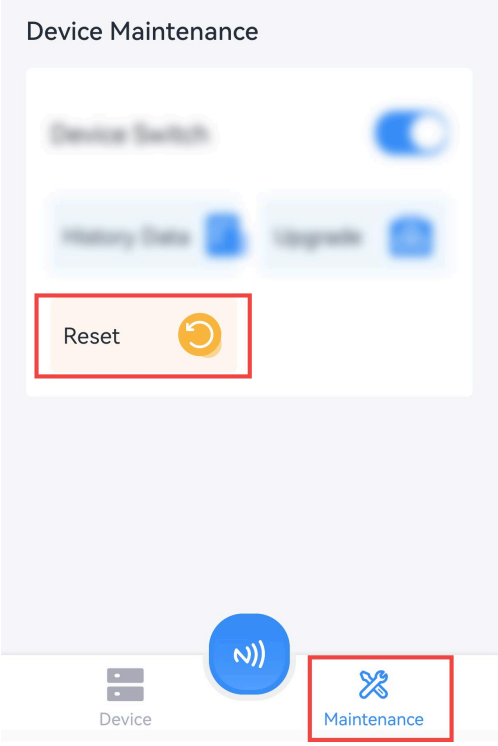

2. Click **Reset**.

3. In the displayed dialog box, click **Confirm**.

4. Put the NFC detection area of the phone close to the NFC antenna of the device. If the device is successfully reset, the following page is displayed.

Write successfully!

Chapter 5. Uplink Packets and Downlink Commands

The device uses the standard Milesight IoT payload format based on IPSO. This chapter describes the uplink data packets and downlink commands supported by the device. They are all structured in the following format, the Data field should follow **little endian**:

Channel 1	Type 1	Data 1	Channel 2	Type 2	Data 2	Channel 3	...
1 Byte	1 Byte	N Bytes	1 Byte	1 Byte	N Bytes	1 Byte	...

All explanations and examples in this document are based on the HEX format. For all the Milesight IoT decoder examples, refer to the files available on https://github.com/Milesight-IoT/SensorDecoders.

Uplink Packets

This section describes the uplink packets reported by the device.

Basic Information Packet

When joining the network, the device reports a packet containing the basic device information to the gateway.

Packet description:

Item	Channel	Type	Byte	Description
Power On	ff	0b	1	Device is on
Protocol Version	ff	01	1	Example: 01=V1
Hardware Version	ff	09	2	Example: 03 10 = V3.1
Software Version	ff	0a	2	Example: 03 01 = V3.1
Device Type	ff	0f	1	00: Class A, 01: Class B, 02: Class C, 03: Class C to B
Serial Number	ff	16	8	16 digits
TSL Version	ff	ff	2	Example: 01 00=>V1.0
Reset Report	ff	fe	1	ff, report after reset to factory default

Example:

ff0bff ff0101 ff166136c40091605408 ff090200 ff0a0101 ff0f00		
Channel	**Type**	**Value**
ff	0b	ff
ff	01	01=V1
ff	16	SN: 6136c40091605408
ff	09	Hardware: 0200=V2.0
ff	0a	Software: 0101=V1.1
ff	0f	00: Class A

Periodically Reported Data Packet

The sensor supports to report sensor data according to reporting interval (10mins by default).

Packet description:

Item	Channel	Type	Byte	Description
Battery Level	01	75	1	UINT8, Unit: %
Temperature	03	67	2	UINT16/10, Unit: °C
Humidity	04	68	1	UINT8/2, Unit: %RH
PIR Status	05	9f	2	Bit 15: 0 = Vacant, 1 = Trigger Bit 14-0: PIR Trigger Time
Light Level	06	cb	1	00: 0-5 lux 01: 6-50 lux 02: 51-100 lux 03: 101-500 lux 04: 501-2000 lux 05: > 2000 lux

Item	Channel	Type	Byte	Description
Light Value	06	9d	2	UINT16, Unit: lux
CO_2	07	7d	2	UINT16, Unit: ppm

Example 1:

Periodically reported data packet of AM304L.

0367ea00 04688a 059f0080 06cb01 077dcd04 087d5e01 09735127		
Channel	**Type**	**Value**
03	67	Temperature:ea 00 => 00 ea = 234/10=23.4°C
04	68	Humidity: 8a=>138/2=69%RH
05	9f	0080=>8000 = Trigger, Trigger Time = 0
06	cb	Light Level: 01= level 1 (6-50 lux)

Example 2:

Periodically reported data packet of AM305L.

0367ea00 04688a 050001 06cb01 077d9001		
Channel	**Type**	**Value**
03	67	Temperature:ea 00 => 00 ea = 234/10=23.4°C
04	68	Humidity: 8a=>138/2=69%RH
05	9f	0080=>8000 = Trigger, Trigger Time = 0
06	cb	Light Level: 01= level 1 (6-50 lux)
07	7d	CO_2: 9001 => 0190=400 ppm

Alarm Report

The device reports the following types of alarm packets.

Packet description:

Item	Channel	Type	Byte	Description
PIR Trigger	05	00	1	00: Vacant, 01: Trigger

Item	Channel	Type	Byte	Description
Temperature Overrange Alarm	b3	67	1	00 = Collection error, 01 = Over-range
Humidity Alarm	b4	68	1	00 = Collection error
Light Level Alarm	b6	cb	1	00 = Collection error
Light Value Alarm	b6	9d	1	00 = Collection error, 01 = Over-range
CO_2 Over-range Alarm	b7	7d	1	00 = Collection error, 01 = Over-range
Temperature Threshold Alarm	83	67	3	**Byte 1-2:** Temperature, INT16/10, Unit: °C **Byte 3:** • 10 = Below dismiss • 11= Below (min. threshold) alarm • 12 = Above dismiss • 13 = Above (max. threshold) alarm • 14 = Within dismiss • 15 = Within alarm • 16 = Beyond dismiss • 17 = Beyond alarm
Light Threshold Alarm	86	9d	3	**Byte 1-2:** Light value, UINT16, Unit: lux **Byte 3:** • 10 = Dim • 11 = Bright
CO_2 Threshold Alarm	87	7d	3	**Byte 1-2:** CO2 concentration, UINT16, Unit: ppm **Byte 3:** • 10 = Polluted threshold alarm dismiss • 11 = Polluted threshold alarm • 12 = Bad threshold alarm dismiss • 13 = Bad threshold alarm

Example 1:

When the PIR sensor is triggered, it will report a status packet.

050001		
Channel	**Type**	**Value**
05	00	01=trigger

Example 2:

AM305L detected a carbon dioxide concentration of 3000ppm, and the Bad threshold alarm is triggered.

87 7d b80b 13		
Channel	**Type**	**Value**
87	7d	b80b => 0bb8 = 3000ppm 13 = Bad threshold alarm

Example 3:

Low battery level alarm: report when the battery level drops to 1%.

017501		
Channel	**Type**	**Value**
01	75	01=1%

Downlink Commands

Downlink commands can be used for remote control of device through a network server. The downlink port (application port) is 85 by default and can be configured through ToolBox.

Commands for General Setting

The device supports multiple commands for general setting.

Command description:

Item	Channel	Type	Byte	Description
Reboot	ff	10	1	ff
Report Interval	f9	bd	3	**Byte 1**: 00 **Byte 2-3**: UINT16, Unit: min
PIR Reporting	f9	bc	2	**Byte 1:** 00: Trigger reporting, 01: Vacant reporting **Byte 2:** 00: Disable, 01: Enable
Temperature Unit/Light Mode	f9	c0	2	**Byte 1:** 00: Temperature, 01: Light **Byte 2:** Temperature: 00: °C, 01: °F Light: 00: Level, 01: Value
Data Collection	ff	18	2	**Byte 1:** 03: PIR, 04: Light, 05: CO_2 **Byte 2:** 00: Disable, 10: Enable
Button Lock	ff	25	1	00: Disable 01: Lock Power Off 02: Lock Power On 03: Lock All Features
Clear History Data	ff	27	1	01
LED Indicator	ff	2e	1	00: Disable 02: Blink
Sync Time	ff	4a	1	00
Data Storage	ff	68	1	00: Disable, 01: Enable
Data Retransmission	ff	69	1	00: Disable, 01: Enable

Item	Channel	Type	Byte	Description
Data Retrans-mission Interval	ff	6a	3	**Byte 1**: 00 **Byte 2-3**: UINT16, Unit: s, Range: 30~1200, Default: 600
Time To Re-port Vacancy	ff	95	2	UINT16, Unit: s, Range: 60-3600.

Example 1:

Reboot the device.

ff10ff

Example 2:

Enable the button lock, the device cannot be turned off by power button.

ff2501		
Channel	**Type**	**Value**
ff	25	01 = Lock turn off

Example 3:

Enable PIR vacant reporting.

f9 bc 01 01		
Channel	**Type**	**Value**
f9	bc	01=Vacant reporting, 01=Enable

Commands for Calibration Settings

Item	Channel	Type	Byte	Description
CO_2 Calibration	ff	1a	1	00: Restore Factory Calibration 03: Manual Calibration

Item	Channel	Type	Byte	Description
CO_2 Auto Back-ground Calibration	ff	39	5	**Byte 1:** 00-disable, 01-enable **Byte 2-5:** 00000000
CO_2 Altitude Calibration	ff	87	3	**Byte 1:** 00-disable, 01-enable **Bytes 2-3:** UINT16, Unit: m, Range: 0-5000
Numerical Calibration	ff	ea	3	**Byte 1:** • 00: disable temperature calibration • 80: enable temperature calibration • 01: disable humidity calibration • 81: enable humidity calibration • 02: disable CO_2 calibration • 82: enable CO_2 calibration **Byte 2-3:** calibration value. Temperature: INT16/10, Range: -80-80°C Humidity: INT16/2, Range: -100-100%RH CO_2: INT16, Range: -4600-4600ppm

Example 1:

Manual calibration after putting device to outdoors for more than 10 minutes.

ff1a03		
Channel	**Type**	**Value**
ff	1a	03=Manual Calibration

Example 2:

Enable temperature numerical calibration, with a calibration value of +10°C.

ff ea 80 64 00		
Channel	**Type**	**Value**
ff	ea	80 = Enable temperature calibration 6400=>0064=100/10=10°C

Commands for Threshold Settings

Item	Channel	Type	Byte	Description
Temperature Threshold Alarm	ff	06	9	**Byte 1**: 48 = Disable, 49= Below, 4a = Above, 4b = Within, 4c = Below or Above **Byte 2-3**: Min. Threshold, INT16/10, Unit: °C, Range:-20-60 **Byte 4-5**: Max. Threshold, INT16/10, Unit: °C, Range:-20-60 **Byte 6-9**: 00000000
CO_2 Threshold	f9	c4	6	**Byte 1**: 00=Disable, 01=Enable **Byte 2**: 00 = Enable Bad threshold alarm, 01 = Enable Polluted threshold alarm, 02 = Both enable **Byte 3-4**: Bad threshold value, INT16, Range:400-5000. **Byte 5-6**: Polluted threshold value, INT16, Range:400-5000.
Light Threshold	f9	bf	5	**Byte 1**: 00=Disable, 01=Enable **Byte 2-3**: Dim threshold value, INT16, Range:0-60000.

Item	Channel	Type	Byte	Description
				Byte 4-5: Bright threshold value, INT16, Range:0-60000.
Collecting Interval	f9	be	4	**Byte 1**: 00 = Temperature, humidity and CO_2, 01 = Light **Byte 2**: 01 **Byte 3-4**: Interval time, UINT16, Unit: min, range: 1-1440.
Alarm Reporting Times	ff	f2	2	UINT16, Range: 1-1000
Alarm Dismiss Report	ff	f5	1	00: Disable, 01: Enable

Example 1:

Enable the CO_2 threshold alarm, set the Bad threshold value as over 1000ppm and Polluted threshold value as over 600ppm.

f9 c4 01 02 e803 5802		
Channel	**Type**	**Value**
f9	c4	0102=Enable Bad and Polluted threshold alarm Bad threshold value: e803=>03e8=1000ppm Polluted threshold value: 5802=>0258=600ppm

Example 2:

Set the light collecting interval to 1 min.

f9 be 01 01 0100		
Channel	**Type**	**Value**
f9	be	0101= Light mode 0100=>0001=1min

Commands for D2D Setting

The device supports multiple commands for D2D setting.

Command description:

Item	Channel	Type	Byte	Description
D2D Data Transmission Feature	f9	63	4	**Byte 1:** • 00: Disable • 01: Enable **Byte 2:** • 00: Disable the LoRa uplink • 01: Enable the LoRa uplink **Byte 3-4:** For every bit: 0=Disable, 1=Enable • Bit 0: Temperature • Bit 1: Humidity
D2D Controller Feature	f9	66	1	00=Disable, 01=Enable
Milesight D2D Key	ff	35	4	First 16 digits, last 16 digits are fixed as 0
D2D Controller Condition	ff	96	8	**Byte 1:** • 00: PIR trigger • 01: PIR vacant • 02: lluminance bright • 03: lluminance dim • 04: Trigger/bright • 05: Trigger/dim **Byte 2:** • 00: Disable • 01: Enable

Item	Channel	Type	Byte	Description
				Byte 3: • 00: Disable the LoRa uplink • 01: Enable the LoRa uplink **Byte 4-5:** Commands **Byte 6-8:** 000000

Example :

When the PIR is triggered and light is bright, the device will send command 0100 to D2D agent devices.

ff 96 04 01 01 0100 0000 00		
Channel	**Type**	**Value**
ff	96	04=Trigger/bright 0101=Enable the D2D controller and the LoRa uplink Commands: 0100

Commands for Historical Data Query

The device can query historical data for a specified time point or range through downlink commands. The specified time point can use Unix Timestamp Converter to calculate. The prerequisites are that the device time is correct and the **data storage function** is enabled. The device uploads a maximum of 300 data records per range query.

When querying data for a specific time point, the device uploads the record closest to the requested time within the current reporting interval. For example, with a 10-minute reporting interval, a query for 17:00 will return the exact record if it exists. Otherwise, the device searches for data within a tolerance of ±10 minutes (16:50 to 17:10) and uploads the record closest to 17:00.

Command format:

Item	Channel	Type	Description
Query data for a specified time point	fd	6b	4 Bytes, Unix timestamp
Query data for a specified time range	fd	6c	Start time (4 bytes) + end time (4 bytes), Unix timestamp
Stop data query report	fd	6d	ff
Report interval	ff	6a	3 bytes **Byte 1:** 01 **Byte 2-3:** interval time, unit:s, range: 30-1200 s, default: 60s

Reply format:

Channel	Type	Description
fc	6b/6c	00: data query success 01: invalid time point or time range 02: no data for this time point or time range
20	ce	Data time stamp (4B) + Data Type (1B) + Temperature (2B) + Data Type (1B) + Humidity (1B) + PIR Status (1B) + PIR Count (2B) + Data Type (1B) + Light Level (2B) + Data Type (1B) + CO_2 (2B)
21	ce	Data time stamp (4B) + Data Type (1B) + Temperature (2B) + Data Type (1B) + Humidity (1B) + PIR Status (1B) + PIR Count (2B) + Data Type (1B) + Light Value (2B) + Data Type (1B) + CO_2 (2B)

Item	Description
Data Type	• 0 = Invalid • 1 = Valid • 2 = Over-range • 3 = Collection error

Item	Description
PIR Status	Bit 7: 0 = Invalid, 1=Valid Bit 6-0: 0 = Vacant, 1 = Trigger

Example:

Enquire the historical data in a time range.

fd6c 64735b63 7c885b63		
Channel	**Type**	**Value**
fd	6c	Start time: 64 73 5b 63 => 63 5b 73 64 = 1666937700s End time: 7c 88 5b 63 => 63 5b 88 7c = 1666943100s

Reply:

fc6c00		
Channel	**Type**	**Value**
fc	6c	00: Enquiry success

20ce 0d755b63 01ff00 0173 810100 010000			
Channel	**Type**	**Time Stamp**	**Value**
20	ce	0d 75 5b 63 => 63 5b 75 0d=1666938125s	Temperature: ff00=>00ff=255/10=25.5°C Humidity: 73=115/2=57.5% PIR: 81 0100=> Trigger , count = 1 Light: 00=>Level 0

Chapter 6. Sensor Maintenance

- Do not expose the device to corrosive gas, silicon vapor or high levels of volatile organic compounds.
- Do not clean the device with detergents or solvents such as benzene or alcohol. To clean the device, wipe with a soft moistened cloth. Use another soft, dry cloth to wipe dry.
- Do not paint or cover the device, which may block the air inlets.
- During the transportation and storage, do not take the device out of default antistatic bags.

Chapter 7. Appendix

Carbon Dioxide Levels and Guidelines

CO_2 Level	Description
400 ppm	Normal outdoor air level.
400-1000 ppm	Typical level indoors with good ventilation.
1000-2000 ppm	Poor air quality - requires ventilation.
≥ 2000 ppm	Headaches, sleepiness and stagnant, stale, stuffy air. Poor concentration, loss of attention, increased heart rate and slight nausea may also be present.
5000 ppm	Workplace exposure limit (as 8-hour TWA) in most jurisdictions.
> 40000 ppm	Exposure may lead to serious oxygen deprivation resulting in permanent brain damage, coma, even death.

Illuminance Levels and Guidelines

Level	Illuminance/Lux	Environment Description
Level 0	0-5	No light or minimal street light, twilight.
Level 1	6-50	Cloudy indoor.
Level 2	51-100	Family living room, hallways.
Level 3	101-500	Offices, show rooms, study library, laboratories.
Level 4	501-2000	Supermarkets, drawing work, detailed mechanical workshops, operation theater.
Level 5	>2000	Performance of very prolonged and exacting visual tasks.

Chapter 8. Services

Milesight provides customers with timely and comprehensive technical support services. End-users can contact your local dealer to obtain technical support. Distributors and resellers can contact directly with Milesight for technical support.

Technical Support Mailbox: iot.support@milesight.com

Online Support Portal: https://support.milesight-iot.com

Resource Download Center: https://www.milesight.com/iot/resources/download-center/

MILESIGHT CHINA

TEL: +86-592-5085280

FAX: +86-592-5023065

Add: Building C09, Software Park Phase III, Xiamen 361024, Fujian, China