AM300(L) Series

Indoor Ambiance Monitoring Sensor

User Guide

14 rue Edouard Petit
42000 St-Etienne

Tel : +33 477 92 03 56
Email : contact@rg2i.com

www.rg2i.com

Contents

Chapter 1. Preface 4

Chapter 2. Product Introduction 6

Chapter 3. Hardware Introduction 7

Packing List 7

Hardware Overview 7

E-ink Screen Description (AM300 Series Only) 8

Button and Traffic Light 10

Dimensions(mm) 11

Chapter 4. Power Supply 12

Chapter 5. Quick Start 15

Chapter 6. Operation Guide 16

Access the Sensor 16

Access the Sensor via NFC 16

Access the Sensor via USB 17

LoRaWAN Settings 18

Time Synchronization 20

General Settings 21

Data Collection Settings 27

Calibration Settings 27

Threshold Settings 30

Maintenance 31

Upgrade 31

Backup and Restore 33

Reset to Factory Default 35

Chapter 7. Installation 37

Fixed by 3M Tape 37

Fixed by Screws 38

Chapter 8. Sensor Maintenance..... 39

Chapter 9. Uplink and Downlink..... 40

Overview..... 40

Uplink Data..... 40

Basic Information..... 42

Periodic Report..... 43

Alarm Report..... 45

Historical Data..... 46

Downlink Command..... 46

General Settings..... 46

CO_2 Calibration Settings..... 48

Screen Settings (AM300 Series Only)..... 49

Historical Data Enquiry..... 50

Chapter 10. Appendix..... 53

Carbon Dioxide Levels and Guidelines..... 53

TVOC Levels and Guidelines..... 53

Illuminance Levels and Guidelines..... 53

Chapter 11. Services..... 55

Chapter 1. Preface

Copyright Statement

This guide may not be reproduced in any form or by any means to create any derivative such as translation, transformation, or adaptation without the prior written permission of Xiamen Milesight IoT Co., Ltd (Hereinafter referred to as Milesight).

Milesight reserves the right to change this guide and the specifications without prior notice. The latest specifications and user documentation for all Milesight products are available on our official website http://www.milesight.com

Safety Instruction

These instructions are intended to ensure that user can use the product correctly to avoid danger or property loss. Milesight will not shoulder responsibility for any loss or damage resulting from not following the instructions of this operating guide.

CAUTION:

Injury or equipment damage may be caused if any of these cautions are neglected.

- The device must not be disassembled or remodeled in any way.
- In order to protect the security of the device, please change device password when first configuration. The default password is 123456.
- Do not place the device outdoors where the temperature is below/above operating range. Do not place the device close to objects with naked flames, heat source (oven or sunlight), cold source, liquid and extreme temperature changes.
- The device is not intended to be used as a reference sensor, and Milesight will not should responsibility for any damage which may result from inaccurate readings.
- The batteries should be removed from the device if it is not to be used for an extended period. Otherwise, the batteries might leak and damage the device. Never leave discharged batteries in the battery compartment.
- The device must never be subjected to shocks or impacts.
- Do not clean the device with detergents or solvents such as benzene or alcohol. To clean the device, wipe with a soft moistened cloth. Use another soft, dry cloth to wipe dry.

Revision History

Release Date	Version	Description
Oct.9, 2021	V 1.0	Initial version
Aug. 18, 2022	V1.1	1. Add button lock feature 2. Add downlink commands 3. Add illuminance levels and guidelines
Aug. 22, 2022	V2.0	1. Update TVOC contents based on hardware 2.x 2. Add AM308 model 3. Support data retransmission feature 4. Support downlink commands to ask for historical data
Aug. 31, 2023	V2.1	1. Update mounting bracket picture, delete 86 box mounting 2. Add single channel mode 3. Add AM300L Series
March 29, 2024	V2.2	1. Change the feature of power button 2. Add CO_2 barometric pressure compensation 3. Support to adjust TVOC mode 4. Support downlink command to configure screen content
October 15, 2025	V2.3	1. Battery pre-installed in the device and removed from packing list. 2. Add AM319-HCHO-IR-W version.

Chapter 2. Product Introduction

AM300(L) series is a compact indoor ambience monitoring sensor including motion, humidity, temperature, light, TVOC, CO_2, HCHO/O_3 level, barometric pressure and PM2.5, PM10 for wireless LoRaWAN® network. It is equipped with NFC (Near Field Communication) and can easily be configured via a smartphone or a PC software.

Sensor data are transmitted in real-time using standard LoRaWAN® protocol. LoRaWAN® enables encrypted radio transmissions over long distance while consuming very little power. The user can obtain sensor data and view the trend of data change through Milesight IoT Cloud or through the user's own Network Server.

It has the following features:

- Integrated with multiple sensors like humidity, temperature, CO_2, light, barometric pressure, PM2.5, PM10, etc.
- Multiple display modes and clear emoticon to easily understand the comfort levels via screen
- Equipped with traffic light indicator and buzzer to indicate device status and threshold alarms
- Store locally historical records and support retransmission to prevent data loss
- Compliant with standard LoRaWAN® gateways and network servers
- Quick and easy management with Milesight IoT Cloud and Milesight Development Platform

Chapter 3. Hardware Introduction

Packing List

1 × AM300(L) Series Device

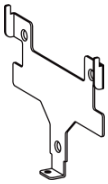

1 × Mounting Bracket

1 × 3M Double-Sided Tape

3 × Wall Mounting Kits

1 × Theft-Deterring Screw

1 × Quick Guide

1 × Warranty Card

AM319 (L) Only

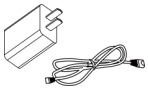

1 × Type-C Cable (1.2 m) & Power Adapter

Note:
If any of the above items is missing or damaged, please contact your sales Representative.

Hardware Overview

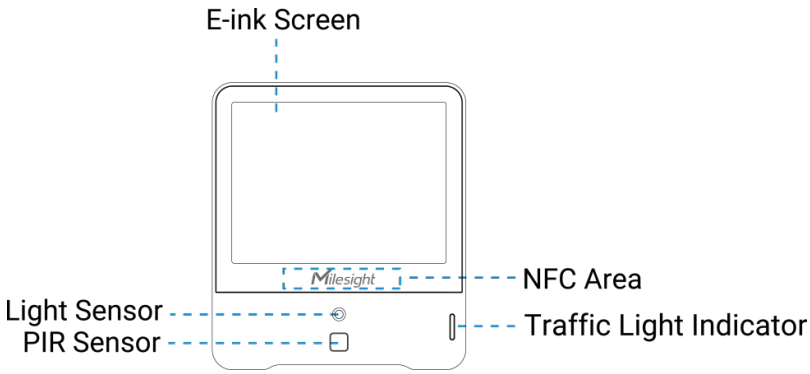

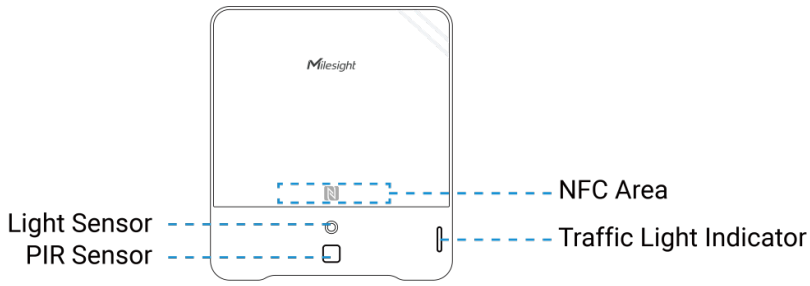

AM300L Series

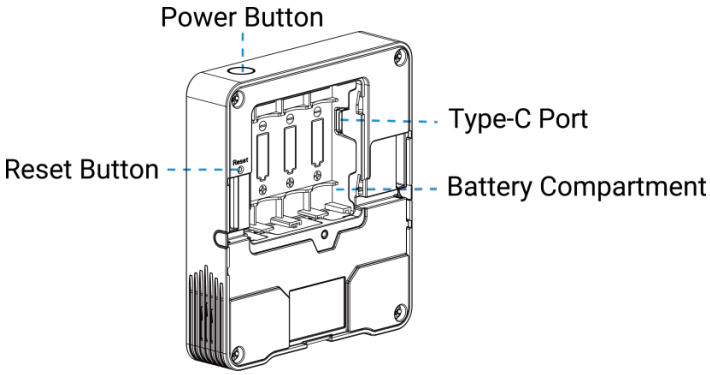

E-ink Screen Description (AM300 Series Only)

Icon	Description
	Battery level (AM30x Only)
	Battery is exhausted (AM30x Only).

Icon	Description
01/01/2021 07:02	Device date and time, see Time Synchronization.
	The device joins the network.
	The device fails to join the network.
	Temperature
	Humidity
	Level 0: 0-5 lux Level 1: 6-50 lux Level 2: 51-100 lux Level 3: 101-500 lux Level 4: 501-2000 lux Level 5: > 2000 lux
TVOC	Level 0: ≤1.99 Level 1: 2.00-2.50 Level 2: 2.51-2.99 Level 3: 3.00-3.99 Level 4: 4.00-4.99 Level 5: ≥5.00
CO2 568 ppm 1500 200	Show CO_2 concentration and history trends
	CO_2/TVOC/PM2.5/PM10/HCHO/O_3 exceeds the Polluted threshold

Icon	Description
	CO_2/TVOC/PM2.5/PM10/HCHO/O_3 exceeds the Bad threshold
	Excellent Environment
	When one of the concentrations of air pollutants of CO_2, TVOC, PM2.5, PM10, HCHO/O_3 exceeds the Polluted threshold
	When one of the concentrations of air pollutants of CO_2, TVOC, PM2.5, PM10, HCHO/O_3 exceeds the Bad threshold

Note:

- AM300 series will update screen data every 1 minute, and do a full-screen refresh every 30 minutes (AM319) or 60 minutes (AM307 and AM308) in order to remove ghosting.
- When AM300 series detects the temperature beyond the range from 0°C to 40°C, the screen will close automatically.
- The screen display mode can be adjusted via ToolBox or downlink command, the display content can be configured via downlink commands.
- The emoticon definition is related to threshold settings.

Button and Traffic Light

Function	Action	Light Status
Power On/Off	Press and hold the power button for more than 3 seconds.	Power On: Off → On
		Power Off: On → Off
Refresh Screen Data	Quick press the power button once.	Blinks once
Reset to Factory Default	Press and hold the reset button for more than 10 seconds.	Quickly Blinks
Air Quality Level Indication (LED Enabled)	Indicate the 3 levels of air quality according to threshold setting. When one of the concentrations of air pollutants of CO_2, TVOC,	Excellent: Green Blinks
		Polluted: Yellow Blinks

Function	Action	Light Status
	PM2.5, PM10 or HCHO/O_3 exceeds the threshold, the light color will change to orange or red	Bad: Red Blinks

Note:

- If the traffic light is disabled, it will not show air quality level indication.
- AM319(L) supports Traffic Light as Blinking or Always On to indicate Polluted or Bad indoor ambience, while AM307(L) and AM308(L) only support Blinking mode.
- The power button features can be locked by ToolBox or downlink command.

Dimensions(mm)

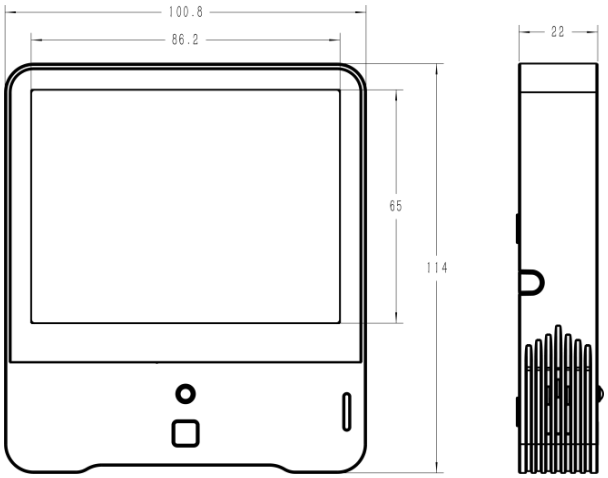

Chapter 4. Power Supply

Powered by Batteries (AM30x Only)

1. Remove the rear cover.

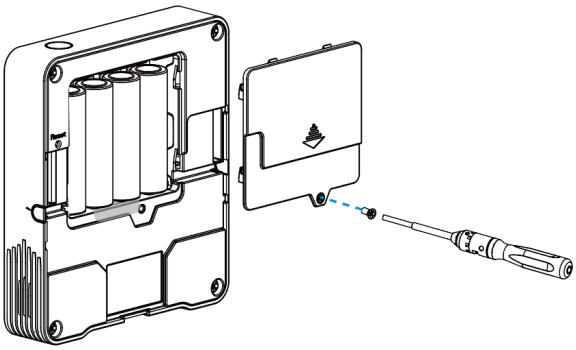

2. Take out the battery insulation sheet.

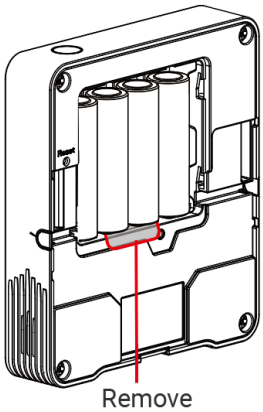

3. Fix the rear cover back to device with the fixing screw.

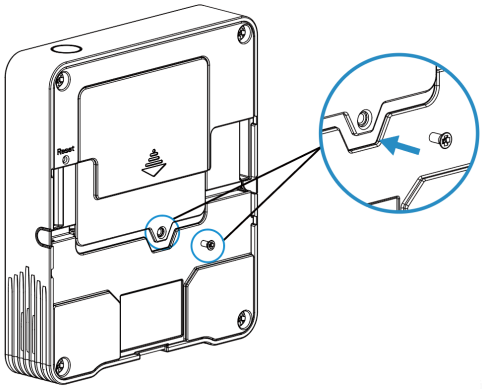

Note:

- The device can only be powered by ER14505 Li-$SOCl_2$ batteries not alkaline batteries.
- Ensure the battery direction is not reversed.
- Ensure all replacing batteries are newest; otherwise it may shorten battery life or cause inaccurate power calculation.
- The battery should be removed from the device if it is not used for an expended period.

Powered by USB (5V)

1. Remove the rear cover, install the type-C cable to the device.
2. Make an opening on the left or right side to pass through the type-C cable.

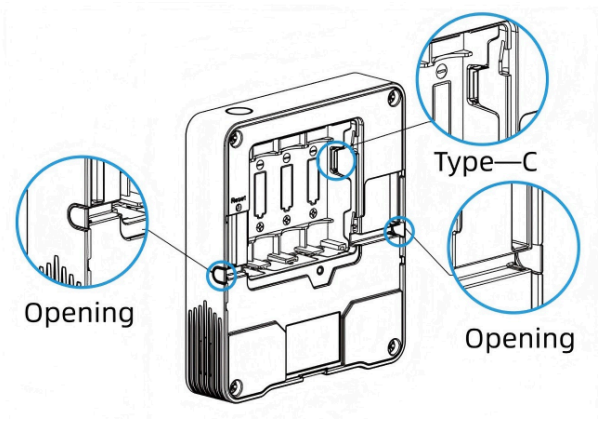

3. Fix the rear cover back to device with the fixing screw.

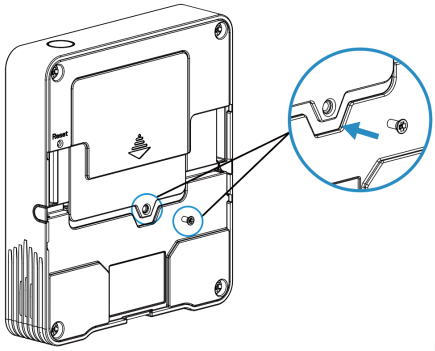

Note:

- The Type-C port can't be used to charge batteries.
- When batteries and external power are both used, external power will be the preferred power supply option.

Chapter 5. Quick Start

This chapter describe the steps to quickly configure this device. If you requires more advanced settings, please refer to operation guide chapter.

1. Press power button for more than 3s until LED on to power on the device.

2. Download and install “Milesight ToolBox” App from Google Play or Apple Store on an NFC-supported smartphone.

3. Enable NFC function on the smartphone, launch Milesight ToolBox, and select the default mode as NFC.

4. Attach the smart phone with NFC area to the device and click to read device information.

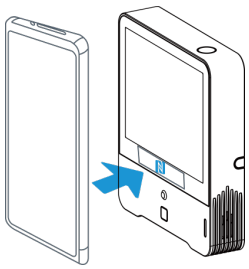

5. Put the device in an open outdoor environment for more than 10 minutes, then go to **Calibration** settings to click **Manual** button and attach the smartphone with NFC area to device to calibrate the CO_2 current value as 400ppm immediately.

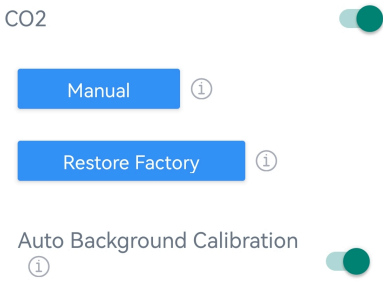

You can also enable Auto Background Calibration to allow the device to calibrate automatically. For more details please refer to Calibration Settings.

6. Keep other settings by default or change as required, then attach the smartphone with NFC area to the device and click **Write** to write the settings. After writing, reread the device to check if the configuration is written well.

Note:

Set the channel index as 8-15 for US915 or AU915 if using default settings of Milesight gateways.

Chapter 6. Operation Guide

Access the Sensor

The device supports local configuration via NFC or USB.

Access the Sensor via NFC

1. Download and install “Milesight ToolBox” App from Google Play or Apple Store on an NFC-supported smartphone.
2. Enable NFC function on the smartphone.
3. Launch Milesight ToolBox, and select the default mode as NFC.
4. Attach the smart phone with NFC area to the device and click to read device information. Basic information, data, and settings of the device will be shown on the Milesight ToolBox App if it’s recognized successfully.
5. Adjust the settings on the App, then attach the smartphone with NFC area to the device and click **Write** to write the settings. After writing, reread the device to check if the configuration is written well.

Note:

- Ensure the location of smartphone NFC area and it’s recommended to take off phone case.
- If the smart phone fails to read/write configurations via NFC, keep the phone away and back to try again.
- The default device password is 123456. Please change a new password for security.

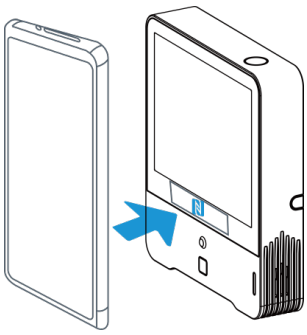

Access the Sensor via USB

1. Download ToolBox software from Milesight official website.

2. Connect the device to a computer via Type-C port.

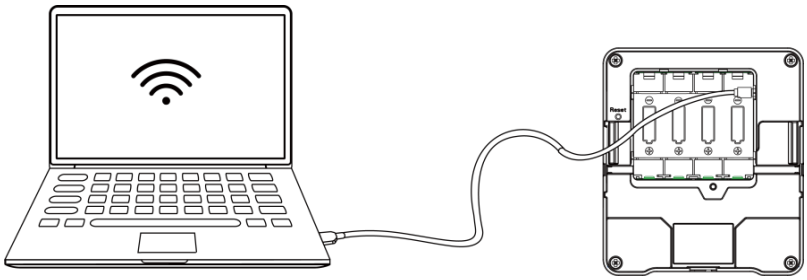

3. Open the ToolBox and select type as **General**, then click password to log in ToolBox. (Default password: **123456**)

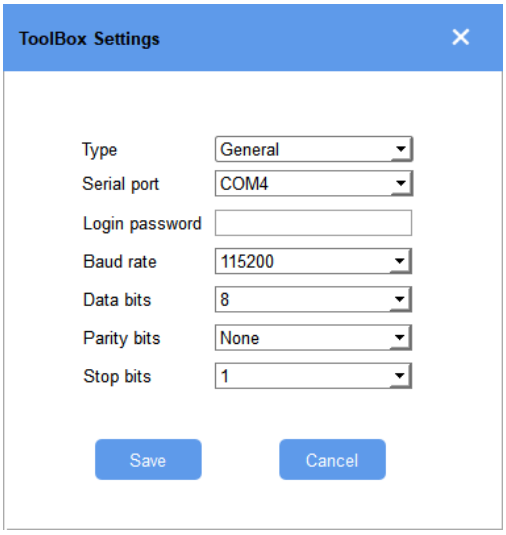

4. After logging in the ToolBox, users can turn on/off device and change other settings.

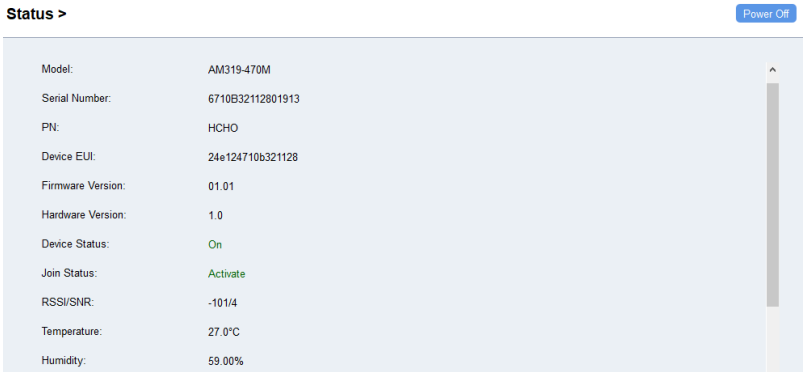

LoRaWAN Settings

This chapter describes the LoRaWAN® network settings of device.

Parameter	Description
Device EUI	Unique ID of the device which can be found on the device. **Note:** please contact sales for device EUI list if you have many units.
App EUI	The default App EUI (join EUI) is 24E124C0002A0001.
Application Port	The port used for sending and receiving data, the default port is 85.
LoRaWAN® Version	V1.0.2 and V1.0.3 are available.
Work Mode	AM30x(L): Class A, AM319(L): Class C
Confirmed Mode	If the device does not receive ACK packet from network server, it will re-send data once.
Join Type	OTAA and ABP mode are available. **Note:** it's necessary to select OTAA mode if connecting device to Milesight IoT Cloud or Milesight Development Platform.
Application Key	Appkey for OTAA mode, default value: "Device EUI" + "Device EUI" (since Q4 of 2025). Example: 24e124123456789024e1241234567890

Parameter	Description
	Note: • The default value of earlier devices is 5572404C696E6B4C6F52613230313823. • Please contact sales before purchase if you require random App Keys.
Network Session Key	Nwkskey for ABP mode, the default is 5572404C696E6B4C6F52613230313823.
Application Session Key	Appskey for ABP mode, the default is 5572404C696E6B4C6F52613230313823.
Device Address	DevAddr for ABP mode, default is the 5th to 12th digits of SN.
Rejoin Mode	Reporting interval≤35 mins: the device will send a specific number of LinkCheckReq MAC packets to the network server every reporting interval or every double reporting interval to validate connectivity; If there is no response, the device will re-join the network. Reporting interval > 35 mins: the device will send a specific number of LinkCheckReq MAC packets to the network server every reporting interval to validate connectivity; If there is no response, the device will re-join the network. **Note:** 1. Only OTAA mode supports rejoin mode. 2. The actual sending number is **Set the number of packets sent** +1.
Channel Mode	Select **Standard-Channel** mode or **Single-Channel** mode. When **Single-Channel** mode is enabled, only one channel can be selected to send uplinks.
Supported Frequency	Enable or disable the frequency to send uplinks. If frequency is one of CN470/AU915/US915, enter the index of the channel to enable in the input box, making them separated by commas.

Parameter	Description
	Examples: 1, 40: Enabling Channel 1 and Channel 40 1-40: Enabling Channel 1 to Channel 40 1-40, 60: Enabling Channel 1 to Channel 40 and Channel 60 All: Enabling all channels Null: Indicate that all channels are disabled
ADR Mode	Enable or disable network server to adjust Spreading Factor, Bandwidth an Tx Power to optimize data rates, airtime and energy consumption in the network.
Spreading Factor	If ADR mode is disabled, the device will send uplink data following this SF parameter. The higher the spreading factor, the longer the transmission distance, the slower the transmission speed and the more the consumption.
Tx Power	Tx power (transmit power) refers to the strength of the outgoing signal transmitted by the device. This is defined by LoRa alliance.
RX2 Data Rate	RX2 data rate to receive downlinks.
RX2 Frequency	RX2 frequency to receive downlinks. Unit: Hz

Time Synchronization

This section describes how to sync the time of the device.

Sync via ToolBox App

After reading the device via Milesight ToolBox App, sync the device time with time zone from the smart phone.

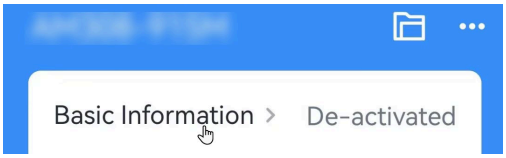

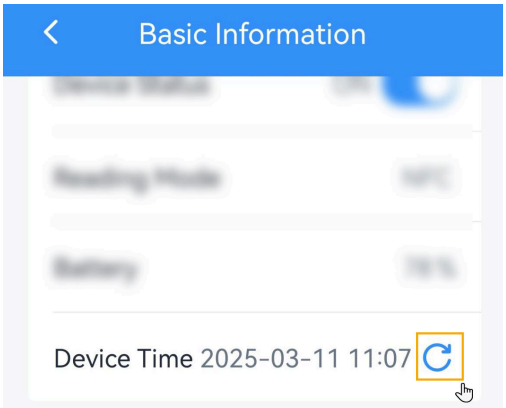

Sync via Network Server

This requires to ensure the LoRaWAN® network server supports device time synchronization feature. Example: Milesight gateway embedded NS.

1. Set the LoRaWAN® version of the device to V1.0.3.
2. Connect the device to the network server. After joining the network, the device will send a DeviceTimeReq MAC command to enquire the time from network server.

Note:

- This only supports to get the time but not time zone. The time zone can be configured by ToolBox App or downlink command.
- The device will send the DeviceTimeReq command every 5 days since the last sync.

General Settings

General settings include the basic parameters of the device.

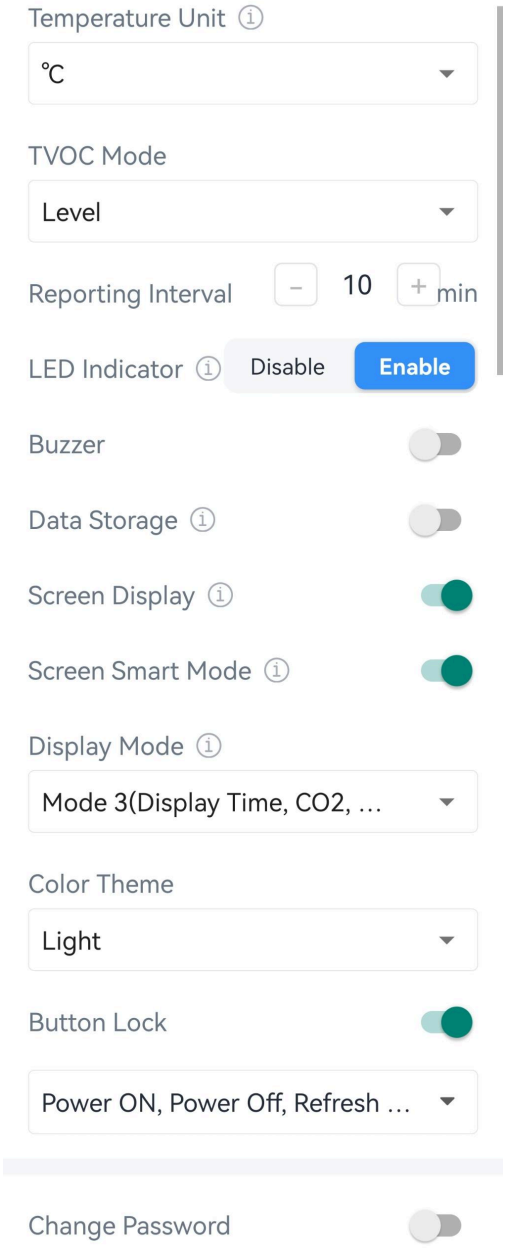

Parameters	Description
Temperature Unit	Change the temperature unit displayed on the ToolBox and screen.

Parameters	Description
	Note: 1. The temperature unit in the reporting package is fixed as Celsius(°C). 2. Please modify the threshold settings if the unit is changed.
TVOC Mode	Change the unit of reported and displayed TVOC data.
Reporting Interval	Reporting interval of transmitting current sensor values to network server. Default: 10 mins, Range: 1-1080 mins.
LED Indicator	Enable or disable the traffic light indicator to indicate air quality level. **AM307 (L)& AM308(L)**: Blink **AM319(L)**: Always On, Blink
Buzzer	Enable or disable the buzzer. If enabled, the buzzer will response when one of concentrations of air pollutants exceeds the **Bad** threshold. It will automatically stop when the concentration values are lower than the Bad threshold. **Check Button**: After enabled, users can press the power button to stop the buzzer beep.
Data Storage	Disable or enable to store **periodic report** data locally. The stored data can be exported as CSV format file and saved to smartphone via ToolBox.

Parameters	Description
	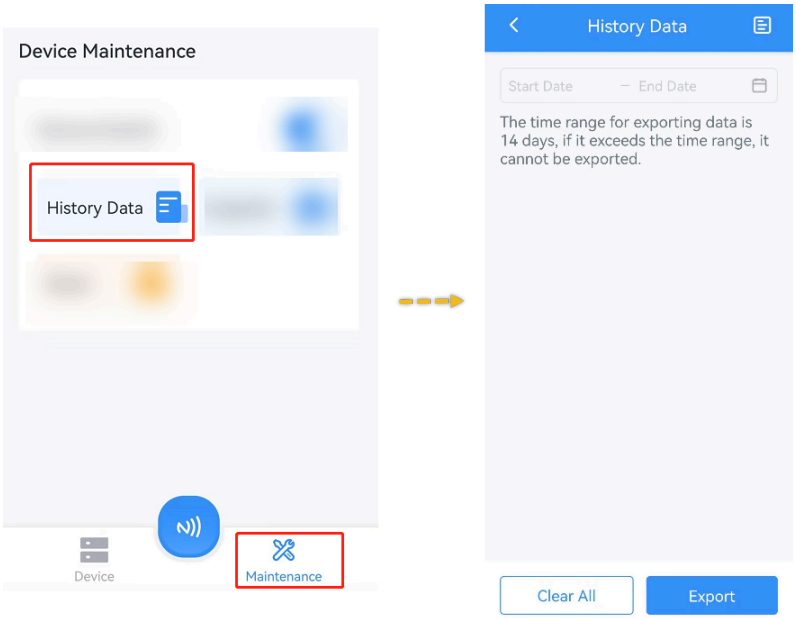 **Maintenance >** 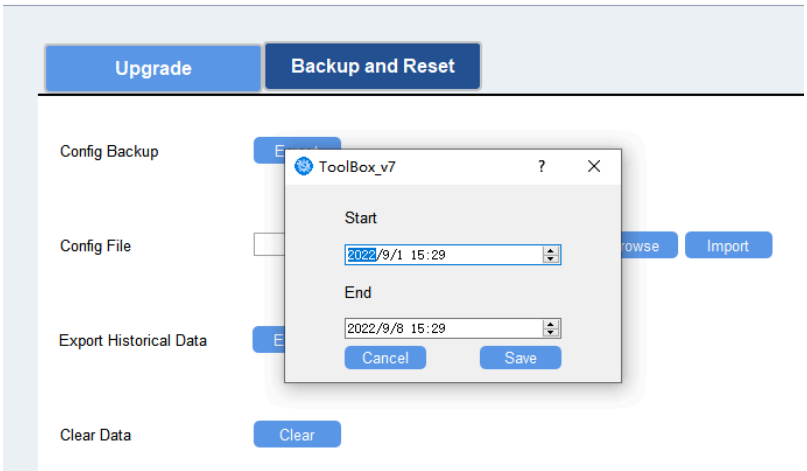

Parameters	Description
	Note: 1. It is necessary to sync the time to ensure the data is stored in correct time. 2. The device will still store the data even the network status is de-activated. 3. ToolBox App can only export the last 14 days' data at most.
Data Retransmission	Disable or enable data retransmssion. When the device detects the network status is de-activated via Rejoin Mode, the device will record a data lost time point and re-transmit the lost data after device re-connects to the network. **Note:** 1. This setting only takes effect when Data Storage is enabled. 2. If the device is rebooted or re-power when data retransmission is not completed, the device will re-send all retransmission data again after device is reconnected to the network. 3. If the network is disconnected again during data retransmission, it will only send the latest disconnected data. 4. The default report data retransmission interval is 600s, this can be changed via downlink command. 5. The reported format of retransmission data will include timestamps and is different from periodic report data. 6. This setting will increase the uplink frequencies and shorten the battery life.
Button Lock	After enabled, users can choose to lock the feature of power button: refresh display, power on, power off.
Change Password	Change the password for ToolBox App to write this device, or for ToolBox software to log in the device.

Screen Settings (AM300 Series Only)

Parameters	Description
Screen Display	Disable or enable screen display.
Smart Screen Mode	When PIR value is 0 (Vacant) and last for 20 mins, the screen will stop updating to save power.
Screen Display Mode	Select the screen display contents. **AM307** Mode 1: Time&Date, CO_2, Temperature, Humidity Mode 2: CO_2, Temperature, Humidity, TVOC, light Mode 3: Time&Date, CO_2, Temperature, Humidity, TVOC, light **AM308** Mode 1: Time&Date, CO_2, PM2.5&PM10, Temperature, Humidity Mode 2: CO_2, PM2.5&PM10, Temperature, Humidity, TVOC, light Mode 3: Time&Date, CO_2, PM2.5&PM10, Temperature, Humidity, TVOC, light **AM319** Mode 1: Time&Date, CO_2, PM2.5, PM10, Temperature, Humidity Mode 2: CO_2, PM2.5, PM10, HCHO/O_3, Temperature, Humidity, TVOC, light Mode 3: Time&Date, CO_2, PM2.5, PM10, HCHO/O_3, Temperature, Humidity, TVOC, light **Note:** when TVOC mode is concentration, light will not included in the display mode.
Color Theme	Select screen display background color as Light or Dark.

Data Collection Settings

Enable or disable the data you need to monitor. Among them, temperature, humidity and CO_2 are not allowed to disable. If any item is disabled, it will disappear from the screen.

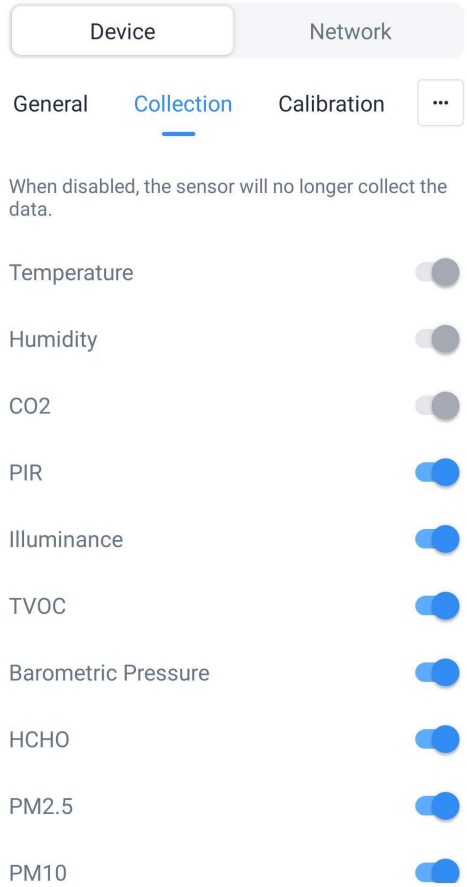

Calibration Settings

Numerical Calibration

Set the calibration value, the device will add calibration value to the current value, then display and report the final value.

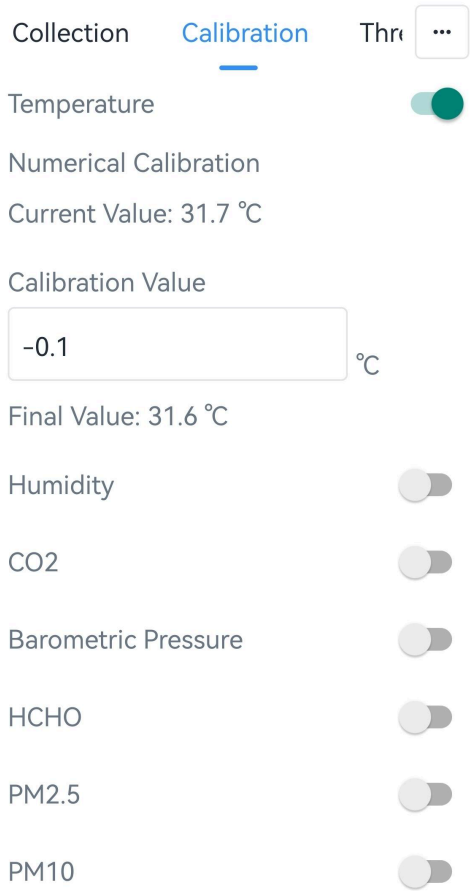

CO_2 Calibration

The device provides multiple calibration methods for CO_2 calibration. Among them, it is necessary to select either manual calibration or Auto Background calibration to ensure accurate readings.

> **Note:**
> If the CO_2 value is lower than 400 ppm after calibration, the device will display and report the value as 400 ppm.

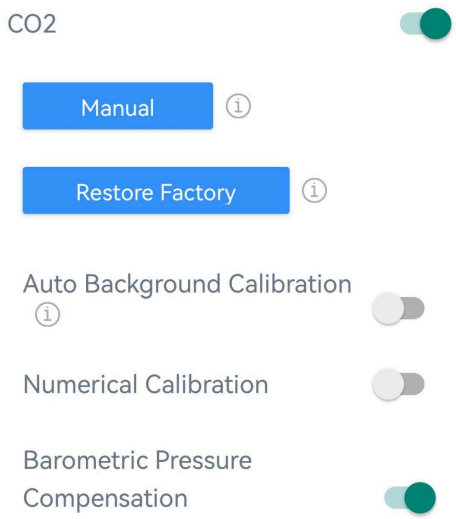

Calibration Method	Description
Manual Calibration	Put the device in an open outdoor environment for more than 10 minutes and click **Manual** button to adjust the current value as 400ppm immediately. This calibration is the fastest but it adapts to the open outdoor environment. This calibration is suitable for some applications which need to place CO_2 sensors in unventilated spaces, you can take sensors out to complete the manual calibration before installation.
Restore Factory Calibration	Clean the manual calibration and turn back to factory calibration.
Auto Background Calibration	After enabled, the device will record the offset between 400ppm and lowest CO_2 level during a calibration period of 168 hours (7 days) and add this offset to original baseline of sensor to complete the calibration. This calibration is suitable for some applications where CO_2 sensors are placed in **well ventilated or semi-ventilated areas**.
Numerical Calibration	Set the calibration value, the device will add calibration value to the current value, then display and report the final value.

Calibration Method	Description
Barometric Pressure Compensation	Enable the barometric pressure to compensate the value. This requires to enable the barometric pressure sensor.

Threshold Settings

Temperature threshold

The device will upload the current data once instantly when temperature is over or below the threshold. Only when the threshold is released and triggered again, the device will report the threshold packet again.

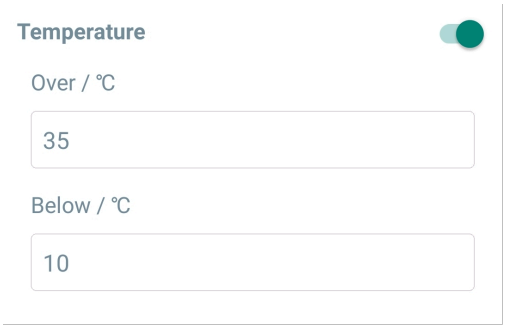

Air Quality 3-Level threshold

For CO_2, TVOC, PM2.5, PM10 and HCHO/O_3, it supports defining Excellent, Polluted and Bad levels. When the corresponding value reaches the Polluted threshold, the LED and the screen will display the alarms; when the corresponding value reaches the Bad threshold, the LED, the buzzer and the screen will response the alarms, and the device will upload the alarm packet once instantly.

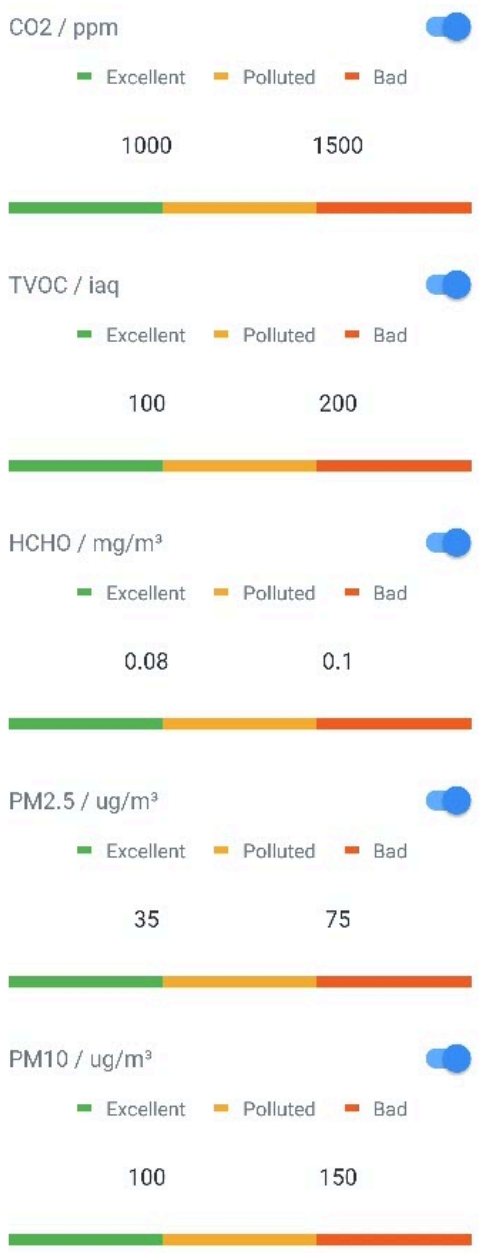

Maintenance

Upgrade

Upgrade via ToolBox App

1. Download firmware from Milesight official website to your smartphone.
2. Read the target device via ToolBox App, click **Upgrade** to upload the firmware file.

3. Click **Upgrade** to upgrade the device.

> **Note:**
> Operation on ToolBox is not supported during an upgrade.

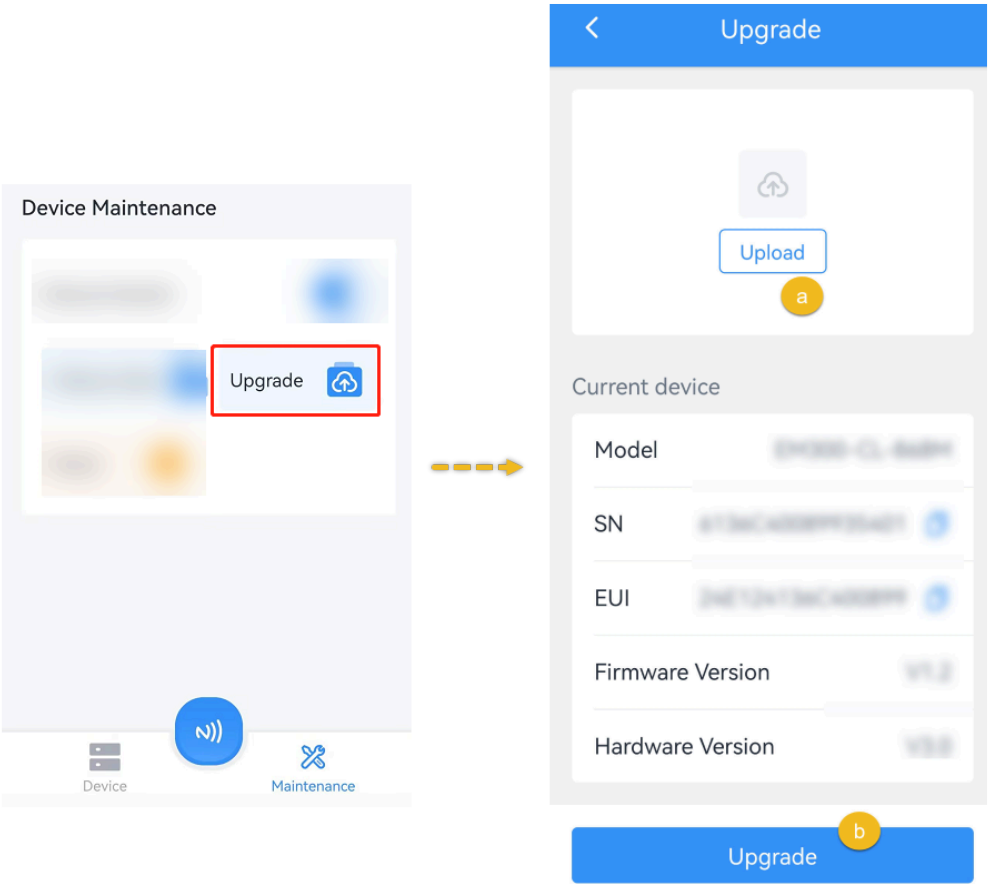

Upgrade via ToolBox Software

1. Download firmware from Milesight official website to your computer.
2. Connect the device to computer via USB port, then log in to the device via ToolBox software.
3. Go to **Maintenance > Upgrade** page, click **Browse** to upload the firmware file and click **Upgrade** to upgrade the device.

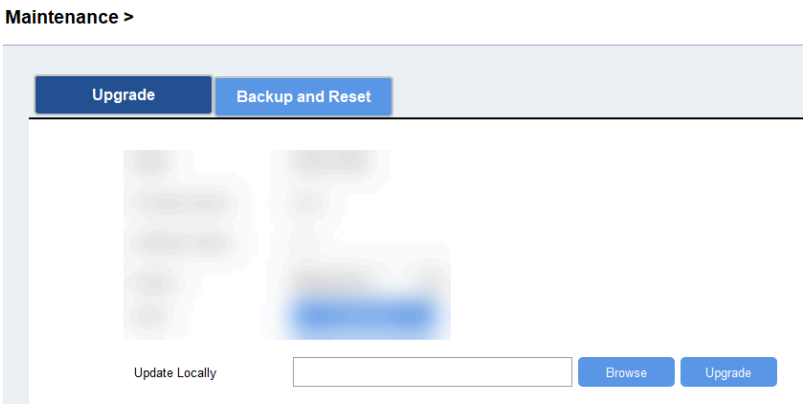

Backup and Restore

This device supports configuration backup for easy and quick device configuration in bulks. Backup and restore is allowed only for devices with the same model and frequency band.

Backup and Restore via ToolBox App

1. Launch ToolBox App, attach the NFC area of smartphone to the device to read the configuration.
2. Edit the configuration as required, click **Set Template** to save current configuration as a template to the ToolBox App.

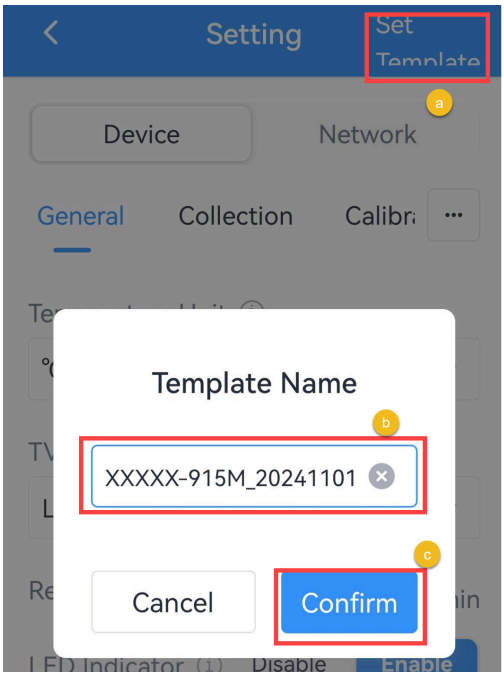

3. Go to **Device >Template** page.

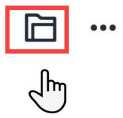

4. Select and click the target template, click **Write** to import the configuration to target devices.

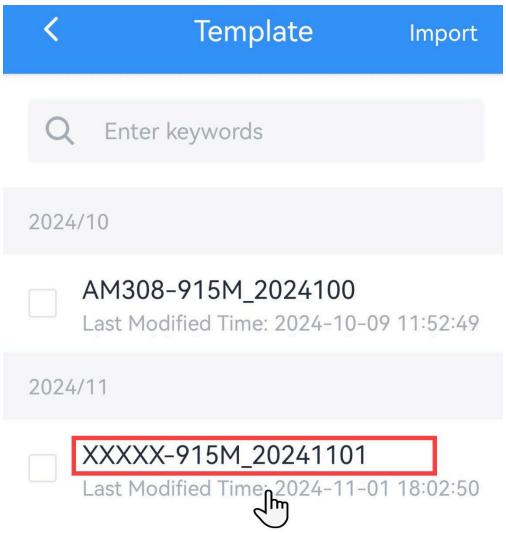

5 (Optional). Check the box of the target template, click **Export** to export this template as JSON format file and save it to the smartphone, click **Delete** to delete this template from your ToolBox App.

Backup and Restore via ToolBox Software

1. Connect the device to a computer via USB port, then log in to the device via ToolBox software.

2. Configure the device and save the settings.

3. Go to **Maintenance > Upgrade** page, click **Export** to save the template file to the computer.

4. Connect another target device to the same computer, go to **Maintenance > Upgrade** page to import the template file.

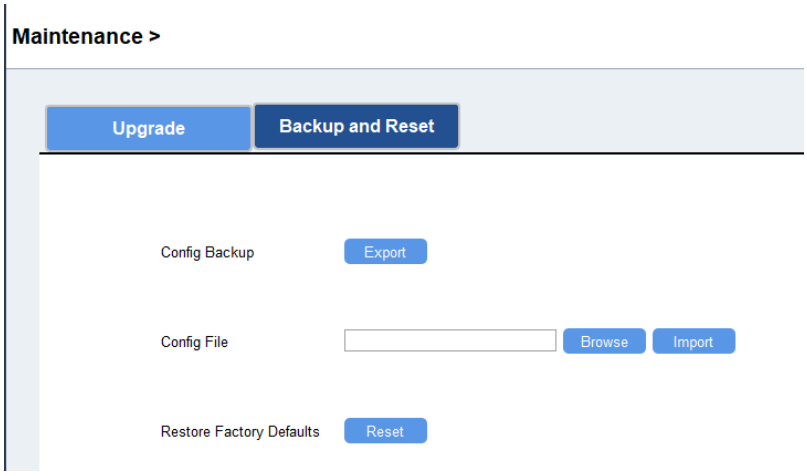

Reset to Factory Default

Via Hardware: Hold on the reset button for more than 10s until the LED indicator quickly blinks.

Via ToolBox App: Click **Reset** and attach the smartphone to device to reset the device.

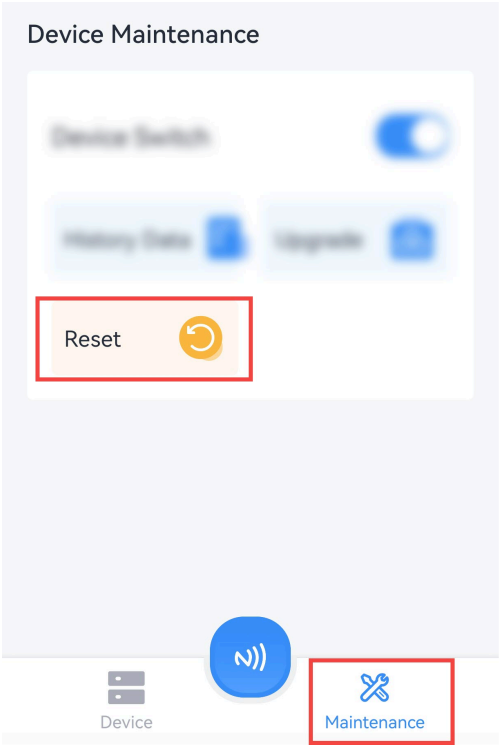

Via ToolBox Software: Go to **Maintenance > Backup and Reset** page, click **Reset** to reset the device.

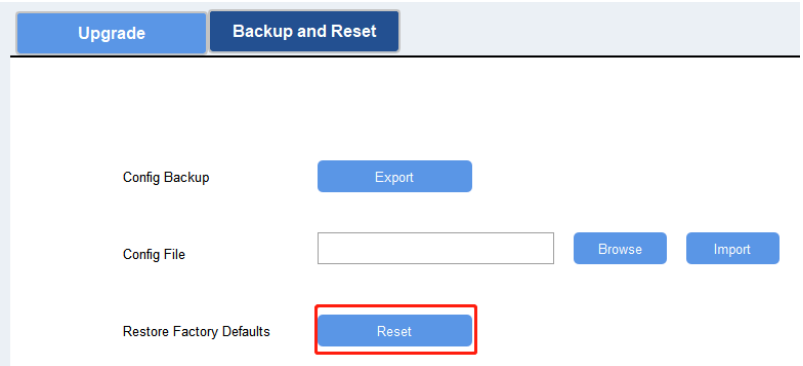
Upgrade
Backup and Reset
Config Backup
Export
Config File
Browse
Import
Restore Factory Defaults
Reset

Chapter 7. Installation

Installation Locations

In order to ensure the best detection and LoRaWAN® communication effect, it is recommended to install devices as follows:

- There should not be any isolates or barriers in PIR and light detection range.
- Do not mount the device where the temperature is below/above operating range and temperature varies greatly.
- Stay far away from any heat source or cold source like oven, refrigerator.
- Do not mount the device close to where airflow varies greatly like windows, vent, fan and air conditioner.
- Do not mount the device upside down.
- Do not place the device right to the window or door. If you have to, you'd better pull the curtain.
- It is recommended to install at least 1.5 m high from floor.

Fixed by 3M Tape

1. Paste 3M tape to the back of the mounting bracket, then tear the other side and place it on a flat surface.

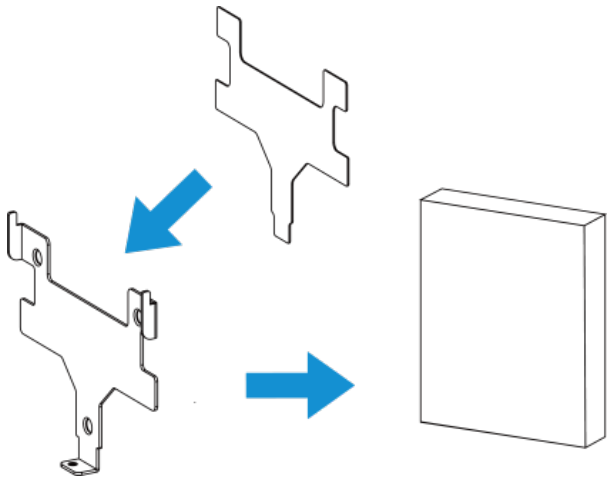

2. Put the device on the mounting bracket, then fix the bottom of the device to the bracket with the theft-deterring screw.

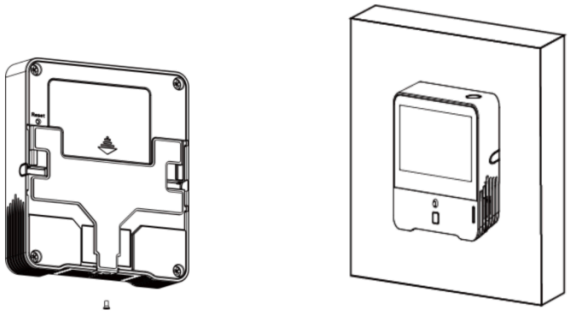

Fixed by Screws

1. Fix the wall plugs into the wall, then fix the mounting bracket to the wall plugs with screws.

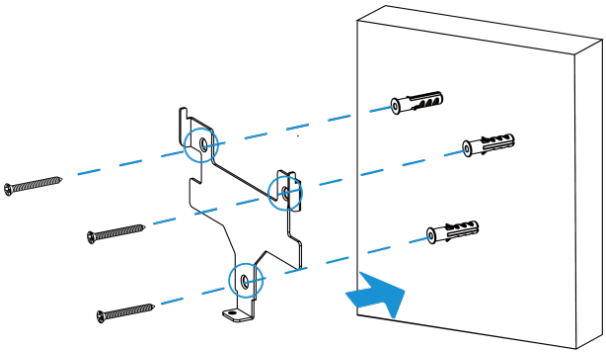

2. Put the device on the mounting bracket, then fix the bottom of the device to the bracket with a fixing screw.

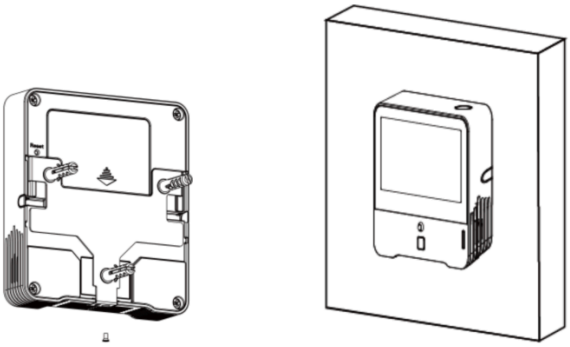

Chapter 8. Sensor Maintenance

- The working life of HCHO sensor is 6 years, and the working life of O_3 sensor is 2 years. Please contact Milesight to purchase sensor replacement chips and refer to replacing video to replace the sensors.
- Avoid exposing the device to gases with high concentrations over a long period time, or it may damage the device and decrease the performance.
- Do not expose the device to corrosive gas, silicon vapor or high levels of volatile organic compounds.
- Do not clean the device with detergents or solvents such as benzene or alcohol. To clean the device, wipe with a soft moistened cloth. Use another soft, dry cloth to wipe dry.
- Do not paint or cover the device, which may block the air inlets.
- During the transportation and storage, do not take the device out of default antistatic bags.
- It is suggested to place device under well-ventilated environment, otherwise the accuracy of TVOC will drop.
- There is possible TVOC accuracy drift if you store without power for a long time in different devices. If you prefer a more consistent reading with better precision, you can keep the device powered on in clear air for some time according to the below list.

Storage Time (Power Off)	Operating Time
Less than 1 month	At least 2 days
1~6 months	At least 3 days
More than 6 months	At least 7 days

Chapter 9. Uplink and Downlink

Overview

All messages are based on following format (HEX), the Data field should follow little-endian:

Channel1	Type1	Data1	Channel2	Type2	Data2	Channel3	...
1 Byte	1 Byte	N Bytes	1 Byte	1 Byte	N Bytes	1 Byte	...

For decoder examples please find files on https://github.com/Milesight-IoT/SensorDecoders.

Uplink Data

This chapter describes the reported data of the device.

Item	Channel	Type	Byte	Description
Power On	ff	0b	1	Device is on
Protocol Version	ff	01	1	Example: 01=V1
Hardware Version	ff	09	2	Example: 03 10 = V3.1
Software Version	ff	0a	2	Example: 03 01 = V3.1
Device Type	ff	0f	1	00: Class A, 01: Class B, 02: Class C, 03: Class C to B
Serial Number	ff	16	8	16 digits
Battery Level	01	75	1	UINT8, Unit: %
Temperature	03	67	2	INT16/10, Unit: °C
Humidity	04	68	1	UINT8/2, Unit: %RH
PIR Status	05	00	1	01=Occupied, 00=Vacant
Light Level	06	cb	1	00: 0-5 lux 01: 6-50 lux

Item	Channel	Type	Byte	Description
				02: 51-100 lux 03: 101-500 lux 04: 501-2000 lux 05: > 2000 lux
CO_2	07	7d	2	UINT16, Unit: ppm
TVOC Level	08	7d	2	UINT16/100
TVOC Concentration	08	e6	2	UINT16, unit: $\mu g/m^3$
Barometric Pressure	09	73	2	UINT16/10, Unit: hPa
HCHO	0a	7d	2	UINT16/100, Unit: mg/m^3
PM 2.5	0b	7d	2	UINT16, Unit: $\mu g/m^3$
PM 10	0c	7d	2	UINT16, Unit: $\mu g/m^3$
O_3	0d	7d	2	UINT16/100, Unit: ppm
Buzzer Status	0e	01	1	00=Not beep (disabled), 01=Beeping
HCHO	0f	7d	2	UINT16/1000, Unit: ppm
Historical Data	20	ce	16-22	**Byte 1-4**: Data unix timestamp, UINT32, Unit: s **Byte 5-6**: Temperature, INT16/10, Unit: °C **Byte 7-8**: Humidity, UINT16/2, Unit: %RH **Byte 9**: PIR status, 01=Occupied, 00=Vacant **Byte 10**: Light Level **Byte 11-12**: CO_2, UINT16, Unit: ppm **Byte 13-14**: TVOC Level, UINT16/100 **Note:** If the TVOC mode is Concentration, the channel ID is 21.

Item	Channel	Type	Byte	Description
				Byte 15-16: Barometric Pressure, UINT16/10, Unit: hpa **Byte 17-18**: PM2.5, UINT16, Unit: μg/m^3 **Byte 19-20**: PM10, UINT16, Unit: μg/m^3 **Byte 21-22**: HCHO/O_3, UINT16/100
Historical Data (AM319-HCHO-IR-W)	22	ce	20	**Byte 1-4**: Data unix timestamp, UINT32, Unit: s **Byte 5-6**: Temperature, INT16/10, Unit: °C **Byte 7-8**: Humidity, UINT16/2, Unit: %RH **Byte 9**: PIR status, 01=Occupied, 00=Vacant **Byte 10**: Light Level **Byte 11-12**: CO_2, UINT16, Unit: ppm **Byte 13-14**: TVOC Level, UINT16/100 **Note:** If the TVOC mode is Concentration, the channel ID is 23. **Byte 15-16**: Barometric Pressure, UINT16/10, Unit: hpa **Byte 17-18**: PM2.5, UINT16, Unit: μg/m^3 **Byte 19-20**: HCHO, UINT16/1000, Unit: ppm

Basic Information

The device will report a basic information packet whenever joining the network.

Example:

ff0bff ff0101 ff166136c40091605408 ff090200 ff0a0101 ff0f00		
Channel	**Type**	**Value**
ff	0b	ff
ff	01	01=V1

ff0bff ff0101 ff166136c40091605408 ff090200 ff0a0101 ff0f00		
Channel	**Type**	**Value**
ff	16	SN: 6136c40091605408
ff	09	Hardware: 0200=V2.0
ff	0a	Software: 0101=V1.1
ff	0f	00: Class A

Periodic Report

AM300(L) series sensors report sensor data according to reporting interval (10mins by default).

1. AM307(L)

0367ea00 04688a 050001 06cb01 077dcd04 087d5e01 09735127		
Channel	**Type**	**Value**
03	67	Temperature:ea 00 => 00 ea = 234/10=23.4°C
04	68	Humidity: 8a=>138/2=69%RH
05	00	PIR: 01=Occupied
06	cb	Light Level: 01= level 1 (6-50 lux)
07	7d	CO_2: cd 04 => 04 cd=1229 ppm
08	7d	TVOC: 5e 01 => 01 5e =350/100=3.50
09	73	Barometric Pressure: 51 27=>27 51=10065/10=1006.5 hPa

2. AM308 (L)

0367ea00 04688a 050001 06cb01 077dcd04 087d5e01 09735127 0b7d3b00 0c7d4300		
Channel	**Type**	**Value**
03	67	Temperature:ea 00 => 00 ea = 234/10=23.4°C
04	68	Humidity: 8a=>138/2=69%RH
05	00	PIR: 01=Occupied
06	cb	Light Level: 01= level 1 (6-50 lux)

0367ea00 04688a 050001 06cb01 077dcd04 087d5e01 09735127 0b7d3b00 0c7d4300		
Channel	**Type**	**Value**
07	7d	CO_2: cd 04 => 04 cd=1229 ppm
08	7d	TVOC: 5e 01 => 01 5e =350/100=3.50
09	73	Barometric Pressure: 51 27=>27 51=10065/10=1006.5 hPa
0b	7d	PM2.5: 3b 00=>00 3b=59 μg/m^3
0c	7d	PM10: 43 00=>00 43=67 μg/m^3

3. AM319(L)-HCHO

0367ea00 04688a 050001 06cb01 077dcd04 087d5e01 09735127 0a7d0700 0b7d3b00 0c7d4300		
Channel	**Type**	**Value**
03	67	Temperature:ea 00 => 00 ea = 234/10=23.4°C
04	68	Humidity: 8a=>138/2=69%RH
05	00	PIR: 01=Occupied
06	cb	Light Level: 01= level 1 (6-50 lux)
07	7d	CO_2: cd 04 => 04 cd=1229 ppm
08	7d	TVOC: 5e 01 => 01 5e =350/100=3.50
09	73	Barometric Pressure: 51 27=>27 51=10065/10=1006.5 hPa
0a	7d	HCHO: 07 00=>00 07=7/100=0.07 mg/m^3
0b	7d	PM2.5: 3b 00=>00 3b=59 μg/m^3
0c	7d	PM10: 43 00=>00 43=67 μg/m^3

4. AM319-HCHO-IR-W

0367ea00 04688a 050001 06cb01 077dcd04 087d5e01 09735127 0f7d1000 0b7d3b00		
Channel	**Type**	**Value**
03	67	Temperature:ea 00 => 00 ea = 234/10=23.4°C

0367ea00 04688a 050001 06cb01 077dcd04 087d5e01 09735127 0f7d1000 0b7d3b00		
Channel	**Type**	**Value**
04	68	Humidity: 8a=>138/2=69%RH
05	00	PIR: 01=Occupied
06	cb	Light Level: 01= level 1 (6-50 lux)
07	7d	CO_2: cd 04 => 04 cd=1229 ppm
08	7d	TVOC: 5e 01 => 01 5e =350/100=3.50
09	73	Barometric Pressure: 51 27=>27 51=10065/10=1006.5 hPa
0f	7d	HCHO: 10 00=>0010=10/1000=0.010ppm
0b	7d	PM2.5: 3b 00=>00 3b=59 μg/m^3

Alarm Report

The device supports to report below types of alarm report packets.

1. Temperature threshold alarm: report when threshold alarm is triggered.

03671001		
Channel	**Type**	**Value**
03	67	Temperature: 1001=> 0110 = 272/10=27.2°C

2. Air quality threshold alarm: report when the value exceeds the Bad threshold.

077d0a06 0e0100		
Channel	**Type**	**Value**
07	7d	CO_2: 0a 06 => 06 0a=1546 ppm
0e	01	00=>Buzzer is not beeping (disabled)

3. Low battery level alarm: report when the battery level drops to 1%.

017501		
Channel	**Type**	**Value**
01	75	01=1%

Historical Data

The device will report retransmission data or stored data as below example.

20ce 0d755b63 0801 57 ff00 7300 0000 f802 6400 9127 2200 2600			
Channel	**Type**	**Time Stamp**	**Value**
20	ce	0d 75 5b 63 => 63 5b 75 0d=1666938125s	Temperature: ff00=>00ff=255/10=25.5°C Humidity: 7300=>0073=115/2=57.5% PIR: 00=> Vacant Light: 00=>Level 0 CO_2: f802=>02f8=760 ppm TVOC Level: 6400=>0064=100/100=1.00 Pressure: 9127=>2791=10129/10=1012.9 hPa PM2.5: 2200=>0022=34 μg/m^3 PM10: 2600=>0026=38 μg/m^3

Downlink Command

General Settings

Item	Channel	Type	Byte	Description
Reboot	ff	10	1	ff
Report Interval	ff	03	2	UINT16, Unit: s
TVOC Mode	ff	eb	1	00: Level, 01: Concentration (μg/m^3)
LED Indicator	ff	2e	1	00: Disable 01: Always On (AM319&AM319L Only) 02: Blink
Buzzer	ff	3e	1	00: Disable, 01: Enable
Stop Buzzer	ff	3d	1	00
Enquire LED and Buzzer Mode	ff	2c	1	00

Item	Channel	Type	Byte	Description
Data Storage	ff	68	1	00: Disable, 01: Enable
Data Retransmission	ff	69	1	00: Disable, 01: Enable
Data Retrans-mission Interval	ff	6a	3	**Byte 1**: 00 **Byte 2-3**: UINT16, Unit: s, Range: 30~1200, Default: 600
Button Lock	ff	25	1	00: Disable 01: Lock Power Off 02: Lock Power On 04: Lock Refresh Display 07: Lock All Features
UTC Time Zone	ff	17	2	INT16/10

Examples:

1. Reboot the device.

ff10ff

2. Set report interval as 20 minutes.

ff03b004		
Channel	**Type**	**Value**
ff	03	b004=>04b0=1200s=20 minutes

3. Set time zone as UTC-2.

ff17ecff		
Channel	**Type**	**Value**
ff	17	ecff=>ff ec=-20/10=-2

4. Enquire LED and buzzer mode.

ff2c00

Reply:

fe2e02 fe3e00		
Channel	**Type**	**Value**
fe	2e	02=Blink
fe	3e	00=Off

CO_2 Calibration Settings

Item	Channel	Type	Byte	Description
Calibration	ff	1a	1	00=Restore Factory Calibration 03=Manual Calibration
Auto Background Calibration (AM30x)	ff	39	5	**Byte 1:** 00-disable, 01-enable **Bytes 2-5:** 00000000
Auto Background Calibration (AM319)	ff	39	1	00-disable, 01-enable
Barometric Pressure Compensation	ff	f4	1	00-disable, 01-enable

Example:

1. Manual calibration after putting device to outdoors for more than 10 minutes.

ff1a03		
Channel	**Type**	**Value**
ff	1a	03=Manual Calibration

2. Enable Auto Background Calibration of AM307 device.

ff390100000000		
Channel	**Type**	**Value**
ff	39	01=Enable

Screen Settings (AM300 Series Only)

<table>
<tr><th>Item</th><th>Channel</th><th>Type</th><th>Byte</th><th>Description</th></tr>
<tr><td>Screen Display</td><td>ff</td><td>2d</td><td>1</td><td>00: Disable, 01: Enable</td></tr>
<tr><td>Screen Display Mode</td><td>ff</td><td>3c</td><td>1</td><td>01: Mode 1, 02: Mode 2, 03: Mode 3</td></tr>
<tr><td>Screen Alarm</td><td>ff</td><td>66</td><td>1</td><td>00: Disable, 01: Enable</td></tr>
<tr><td>Screen Content</td><td>ff</td><td>f0</td><td>4</td><td>Byte 1-2: ffff
Byte 3-4: 0=disable, 1=enable for per bit
<table>
<tr><th>Bit</th><th>Screen Content</th></tr>
<tr><td>0</td><td>Temperature</td></tr>
<tr><td>1</td><td>Humidity</td></tr>
<tr><td>2</td><td>CO_2</td></tr>
<tr><td>3</td><td>Light</td></tr>
<tr><td>4</td><td>TVOC</td></tr>
<tr><td>5</td><td>Emoticon</td></tr>
<tr><td>6</td><td>Character</td></tr>
<tr><td>7</td><td>PM2.5</td></tr>
<tr><td>8</td><td>PM10</td></tr>
<tr><td>9</td><td>$HCHO/O_3$</td></tr>
<tr><td>15-10</td><td>000000</td></tr>
</table></td></tr>
</table>

Example:

1. Disable the e-ink screen display.

ff2d00		
Channel	**Type**	**Value**
ff	2d	00=Disable

2. Disable the display of emoticon and characters.

fff0 ffff9f03		
Channel	**Type**	**Value**
ff	f0	9f 03=>03 9f = 0000 0011 1001 1111 Bit5 and Bit6=0 means emoticon and characters disable

Historical Data Enquiry

The device supports data retrievability feature to send downlink command to enquire the historical data stored in the device. Before that, ensure the device time is correct and data storage feature was enabled to store data.

Command Format:

Item	Channel	Type	Byte	Description
Enquire Data in Time Point	fd	6b	4	Unix timestamp, Unit: s
Enquire Data in Time Range	fd	6c	8	Byte 1-4: Start timestamp, Unit: s Byte 5-8: End timestamp, Unit: s
Stop Query Data Report	fd	6d	1	ff
Data Retrievability Interval	ff	6a	3	Byte 1: 01 Byte 2-3: UINT16, Unit: s, Range: 30~1200, Default: 60

Reply Format:

Item	Channel	Type	Byte	Description
Enquiry Result	fc	6b/6c	1	00: Enquiry success. The device will report the historical data according to data retrievability interval. 01: Time point or time range invalid 02: No data in this time or time range

Note:

1. Use Unix Timestamp Converter to calculate the time.
2. The device only uploads no more than 300 data records per range enquiry.
3. When enquiring the data in time point, it will upload the data which is closest to the search point within the reporting interval range. For example, if the device's reporting interval is 10 minutes and users send command to search for 17:00's data, if the device find there is data stored in 17:00, it will upload this data; if not, it will search for data between 16:50 to 17:10 and upload the data which is closest to 17:00.

Example:

Enquire the historical data in a time range.

fd6c 64735b63 7c885b63		
Channel	**Type**	**Value**
fd	6c	Start time: 64 73 5b 63 => 63 5b 73 64 = 1666937700s End time: 7c 88 5b 63 => 63 5b 88 7c = 1666943100s

Reply:

fc6c00		
Channel	**Type**	**Value**
fc	6c	00: Enquiry success

20ce 0d755b63 0801 57 ff00 7300 0000 f802 6400 9127 2200 2600			
Channel	**Type**	**Time Stamp**	**Value**
20	ce	0d 75 5b 63 => 63 5b 75 0d=1666938125s	Temperature: ff00=>00ff=255/10=25.5°C Humidity: 7300=>0073=115/2=57.5% PIR: 00=> Vacant Light: 00=>Level 0 CO_2: f802=>02f8=760 ppm TVOC Level: 6400=>0064=100/100=1.00

20ce 0d755b63 0801 57 ff00 7300 0000 f802 6400 9127 2200 2600			
Channel	**Type**	**Time Stamp**	**Value**
			Pressure: 9127=>2791=10129/10=1012.9 hPa PM2.5: 2200=>0022=34 µg/m^3 PM10: 2600=>0026=38 µg/m^3

Chapter 10. Appendix

Carbon Dioxide Levels and Guidelines

CO_2 Level	Description
400 ppm	Normal outdoor air level.
400-1000 ppm	Typical level indoors with good ventilation.
1000-2000 ppm	Poor air quality - requires ventilation.
≥ 2000 ppm	Headaches, sleepiness and stagnant, stale, stuffy air. Poor concentration, loss of attention, increased heart rate and slight nausea may also be present.
5000 ppm	Workplace exposure limit (as 8-hour TWA) in most jurisdictions.
> 40000 ppm	Exposure may lead to serious oxygen deprivation resulting in permanent brain damage, coma, even death.

TVOC Levels and Guidelines

IAQ Rating	TVOC ($\mu g/m^3$)	Air Quality
≤1.99	<300	Very Good
2.00 to 2.99	300 to 1000	Good
3.00 to 3.99	1000 to 3000	Medium (not recommended for exposure > 12 months)
4.00 to 4.99	3000 to 10000	Poor (not recommended for exposure > 1 months)
≥5.00	>10000	Bad (not recommended)

Note:
the conversion from μg/m3 to ppb by the factor is about 0.5.

Illuminance Levels and Guidelines

Level	Illuminance/Lux	Environment Description
Level 0	0-5	No light or minimal street light, twilight.

Level	Illuminance/Lux	Environment Description
Level 1	6-50	Cloudy indoor.
Level 2	51-100	Family living room, hallways.
Level 3	101-500	Offices, show rooms, study library, laboratories.
Level 4	501-2000	Supermarkets, drawing work, detailed mechanical workshops, operation theater.
Level 5	>2000	Performance of very prolonged and exacting visual tasks.

Chapter 11. Services

Milesight provides customers with timely and comprehensive technical support services. End-users can contact your local dealer to obtain technical support. Distributors and resellers can contact directly with Milesight for technical support.

Technical Support Mailbox: iot.support@milesight.com

Online Support Portal: https://support.milesight-iot.com

Resource Download Center: https://www.milesight.com/iot/resources/download-center/

MILESIGHT CHINA

TEL: +86-592-5085280

FAX: +86-592-5023065

Add: Building C09, Software Park Phase III, Xiamen 361024, Fujian, China