Milesight

VS321

Wireless AI Occupancy Sensor

User Guide

14 rue Edouard Petit
42000 St-Etienne

Tel : +33 477 92 03 56
Email : contact@rg2i.com

www.rg2i.com

Contents

Chapter 1. Preface 4
Copyright Statement 4
Safety Instruction 4
Revision History 4
Chapter 2. Product Introduction 6
Overview 6
Features 6
Chapter 3. Hardware Introduction 7
Packing List 7
Hardware Overview 7
Button and LED Indicators 7
Dimensions (mm) 8
Chapter 4. Power Supply 10
Chapter 5. Installation 12
Recommended Scenarios 12
Preparation before Installation 12
Installation Requirements 12
Covered Detection Area 13
Installation Step 14
Screw Installation 14
Adhesive Backed Installation 16
Factors Affecting Accuracy 18
Chapter 6. Operation Guide 19
Bluetooth Configuration 19
General Setting 20
People Counting 21
Desk Occupancy 24

Other Settings....28
Threshold Setting.... 33
Network Settings.... 35
LoRaWAN® Settings.... 35
Milesight D2D Settings....37
Maintenance....39
Upgrade....39
Backup and Restore....40
Reset to Factory Default....42
Chapter 7. Uplink Packets and Downlink Commands.... 44
Overview.... 44
Uplink Packets.... 44
Basic Information....44
Periodic Report....45
Alarm Report.... 47
Historical Data....48
Downlink Commands 49
General Setting....49
Threshold Setting....50
LoRaWAN® Setting.... 51
Milesight D2D Setting....52
Historical Data Enquiry.... 53
Chapter 8. Services....56

Chapter 1. Preface

Copyright Statement

This guide may not be reproduced in any form or by any means to create any derivative such as translation, transformation, or adaptation without the prior written permission of Xiamen Milesight IoT Co., Ltd (Hereinafter referred to as Milesight).

Milesight reserves the right to change this guide and the specifications without prior notice. The latest specifications and user documentation for all Milesight products are available on our official website http://www.milesight.com

Safety Instruction

These instructions are intended to ensure that user can use the product correctly to avoid danger or property loss. Milesight will not shoulder responsibility for any loss or damage resulting from not following the instructions of this operating guide.

CAUTION:
Injury or equipment damage may be caused if any of these cautions are neglected.

- The device is not intended to be used as a reference sensor, and Milesight will not should responsibility for any damage which may result from inaccurate readings.
- The device must not be disassembled or remodeled in any way.
- Do not place the device close to objects with naked flames.
- Do not place the device where the temperature is below/above the operating range.
- Make sure electronic components do not drop out of the enclosure while opening.
- When installing the battery, please install it accurately, and do not install the reverse or wrong model.
- The device must never be subjected to shocks or impacts.
- In order to protect the security of the device, please change device password when first configuration. The default password is 123456.

Revision History

Release Date	Version	Revision Content
Jun. 23, 2025	V1.0	Initial version

Release Date	Version	Revision Content
Oct. 15, 2025	V1.1	Battery pre-installed in the device and removed from packing list.

Chapter 2. Product Introduction

Overview

VS321 is a low-power, battery-operated wireless occupancy sensor empowered by advanced AI algorithms. It achieves up to 95% occupancy detection accuracy powered by its AI algorithm. It is equipped with built-in temperature, humidity, and ambient light sensors to provide comprehensive environmental monitoring. Its wire-free design enables effortless and flexible installation.

With simple configuration and wireless detection, VS321 can be integrated with the Milesight LoRaWAN® gateway and Milesight Development Platform, enabling remote monitoring, data visualization, and centralized management. As a Milesight D2D controller, VS321 seamlessly communicates with other Milesight D2D devices, peer-to-peer interaction without gateway dependency.

VS321 can be used in scenarios such as meeting rooms, offices, and campuses to detect space occupancy or personnel activity.

Features

- Achieves up to 95% detection accuracy with advanced AI recognition and analysis technologies
- Adopting a low-power AI chip and PIR triggered detection, combined with scheduled hibernation, effectively reduces overall power consumption
- Supports switching between People Counting and Desk Occupancy modes to meet various needs across different scenarios
- Integrates temperature, humidity and light sensors to enable comprehensive environmental awareness and intelligent scenario-based control
- Wireless and battery-operated design ensures simple, fast and easy installation
- Stores local historical records and supports retransmission to prevent data loss
- Fully GDPR-compliant, with no image collection, ensuring privacy and data security
- Supports Milesight D2D protocol for ultra-low latency, direct device-to-device control without a gateway
- Fully compatible with standard LoRaWAN® gateways and network servers
- Supports remote monitoring and management via the Milesight Development Platform

Chapter 3. Hardware Introduction

Packing List

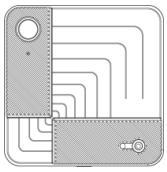

1 × VS321 Device

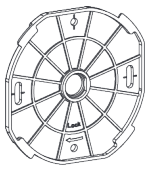

1 × Mounting Bracket

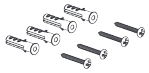

4 × Ceiling Mounting Screws Kits

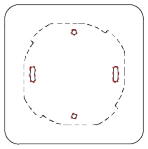

1 × Installation Positioning Sticker

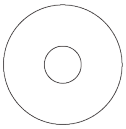

1 × Adhesive Backing

1 × Quick Guide

1 × Warranty Card

Note:
If any of the above items is missing or damaged, please contact your sales representative.

Hardware Overview

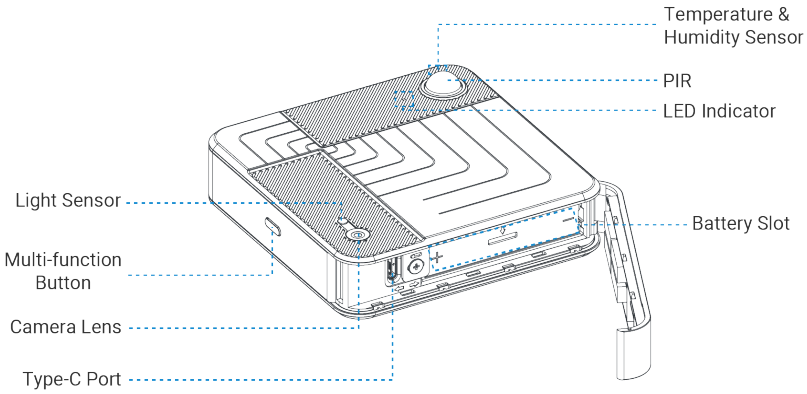

Button and LED Indicators

Function	Action & Description	LED Indication
Power On	Put the batteries in	/
Power Off	Remove batteries	

Function	Action & Description	LED Indication
Confirm Device Status	Short press the Multi-function button once	Power On: Lights up
		Power Off: Lights off
Turn On Bluetooth	Press and hold the Multi-function button for over 3s	Green Blinks Slowly
Turn Off Bluetooth		Green Stays on
Reset to Factory Defaults	Press and hold the Multi-function button for over 10s	Green Blinks Quickly
Device Upgrade	Upgrading (takes about 4~5 mins)	Upgrading & Upgrade failed: Red Light Stays On
		Upgrade Success: Lights off

Dimensions (mm)

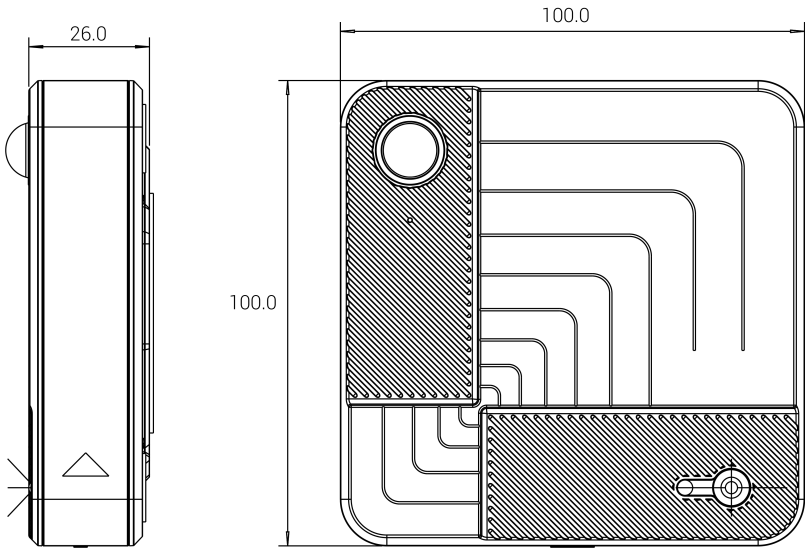

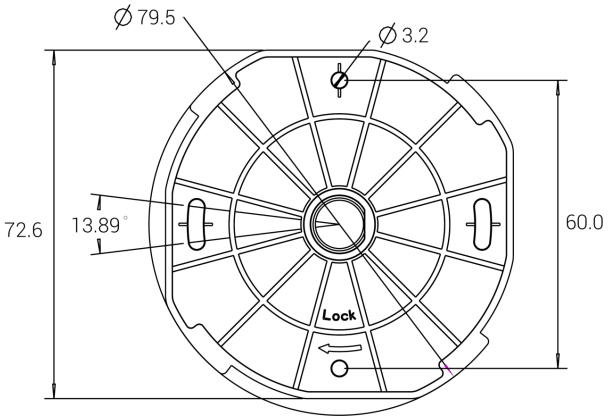
∅ 79.5
∅ 3.2
72.6
13.89°
60.0
Lock

Chapter 4. Power Supply

Step 1: The battery cover can be opened automatically by gently pulling the Access Pull Tab in the direction shown in ①. After the first use, users can decide whether to remove the Access Pull Tab or not according to the actual needs. If you want to open the battery cover again after removing the Access Pull Tab, please refer to the direction shown in ② and gently open it with your finger.

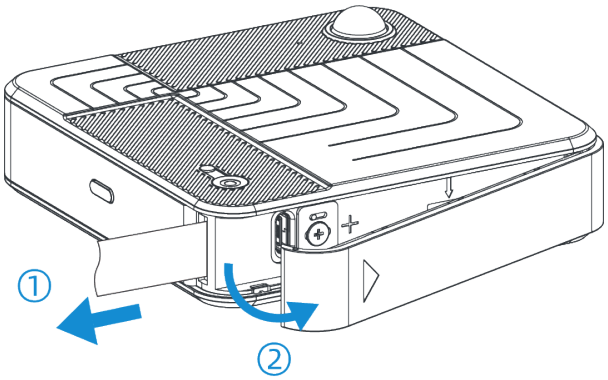

Step 2: Remove the Battery Retention Latch and tilt the device appropriately according to the direction of ① in the illustration, and the batteries will slide out smoothly.

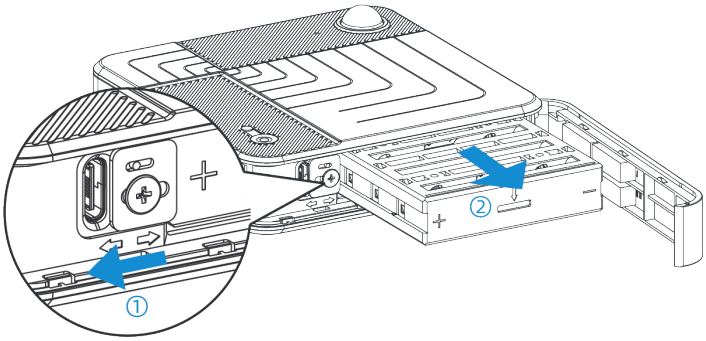

Step 3: Please remove the Battery Insulation Tab from the battery slot as indicated by the marking.

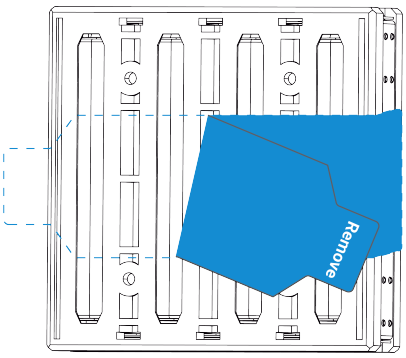

Step 4: Place the battery slot with the batteries already installed inside the device and reset the Battery Retention Latch in the direction of ② in the illustration to prevent the battery from slipping out. Finally, close the battery cover to ensure a secure installation.

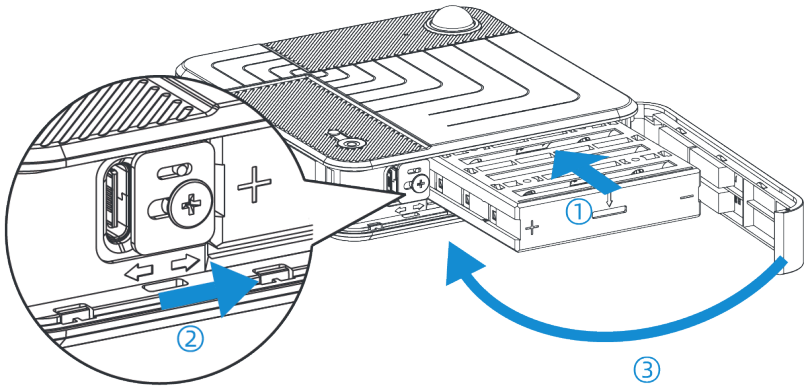

Step 5: Short press the multi-function button, if the green light is on, it means that the device has been successfully powered up.

Note:

- The device only supports ER14505 Li-$SOCl_2$ batteries, and does not support the use of alkaline batteries.
- If the device has not been used for a long period of time, please remove the batteries, otherwise it may cause battery leakage and damage internal components.
- When replacing the batteries make sure that all batteries are new, otherwise it may result in shorter battery life or abnormal power calculations.

Chapter 5. Installation

Recommended Scenarios

Recommendation	Scenarios
Most Recommended	Meeting Room (Refer to Covered Detection Area)
	Office Desk (4~8 desks)
	Study Room (4~8 desks)
	Library (4~8 desks)
Medium Recommended	Large meeting rooms (>40m^2)
	Classroom
	Open Office Scenarios
Not Recommended	Retail Scenarios

Note:

1. The reference area size is for 1 device unit. If your scenarios are larger, you need to deploy more than 1unit ensuring the coverage.
2. If your scenarios are not listed above, please enquire Milesight for details.

Preparation before Installation

Installation Requirements

Installation Conditions: Ceiling Thickness > 3cm

Recommended Height: For sedentary targets, recommended height > 2.2m; for standing targets, recommended height > 3m

Installation Position: Position the device lens at the exact center of the detection area.

If the detection area is rectangular, the lens's long side should align with the long side of the detection area, and the short side should align with the short side.

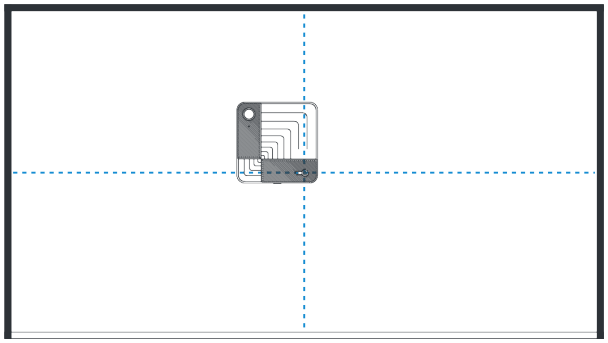

Note:

- Do not install the device too close to doors or mirrors.
- Ensure that the device is facing downward toward the detection area.
- Ensure that the surrounding environment is well-lit (>50 lux), while avoiding interference from bright lights.

Covered Detection Area

Recommended Height	Effective Detection Area	Optimal Detection Area
2.4m	2.6m × 5.0m	1.4m × 3.0m
2.5m	2.3m × 5.2m	1.6m × 3.6m
2.6m	2.6m × 5.6m	1.8m × 4.0m
2.7m	2.8m × 6.1m	2.0m × 4.3m
2.8m	3.1m × 6.3m	2.1m × 4.6m
2.9m	3.4m × 6.8m	2.3m × 5.0m
3.0m	4.0m × 7.2m	2.3m × 5.0m
3.1m	4.0m × 7.6m	2.7m × 5.7m
3.2m	4.1m × 8.0m	2.9m × 6.0m
3.3m	4.4m × 8.4m	3.0m × 6.4m
3.4m	4.7m × 8.7m	3.3m × 6.7m
3.5m	5.0m × 9.0m	3.3m × 7.4m
3.6m	5.2m × 9.5m	3.0m × 7.5m

Recommended Height	Effective Detection Area	Optimal Detection Area
3.7m	5.5m × 9.8m	3.8m × 7.8m
3.8m	5.7m ×10.2m	4.0m × 8.1m
3.9m	6.0m × 10.6m	4.2m × 8.4m
4.0m	6.0m × 11.0m	4.6m × 8.7m

Parameters	Description
Effective Detection Region	The area within which the sensor can identify object presence.
Optimal Detection Region	The area that can be detected with greater than 95% accuracy*.

**:The accuracy represents ideal data. Actual results may be affected by various factors (see the Factors Affecting Accuracy for details).*

Installation Step

Note:
Check that the device and accessories are complete according to the **Quick Start Guide** in the unit's box.

Screw Installation

Note:

1. Wall materials must have sufficient strength and stability to ensure that screws are securely fastened and the overall structure is sturdy.
2. Screws should be fastened in locations that avoid electrical wiring, water pipes, and other elements within the wall to prevent damage to the wall structure or safety hazards.

Step 1: Take out the positioning stickers from the packing list, peel off the protective film, and apply the stickers to the installation area.

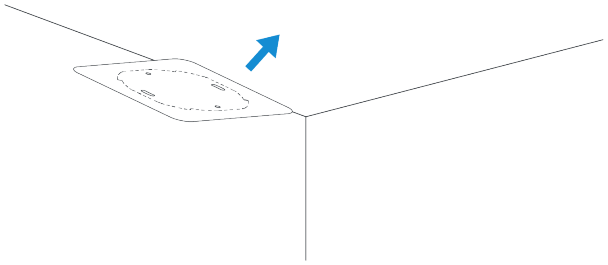

Step 2: Install Mounting Bracket

1. Drill two holes (6mm diameter) at the installation location.
2. Align the bracket using the two oval holes and fix it temporarily.
3. Insert wall plugs into the holes and fasten the bracket with screws.
4. Temporarily install the device and use the ToolBox to check its field of view. Adjust and rotate the bracket as needed until the view is correct.
5. Once aligned, mark and drill two additional holes (6mm diameter) through the two round holes.
6. Insert wall plugs into these new holes, then secure the bracket by tightening screws through the round holes.

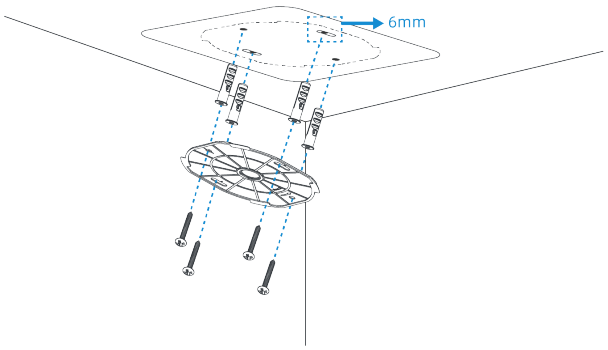

Step 3: Hold both sides of the device with your hands. Align the slots on the back of the device with the hooks on the bracket.

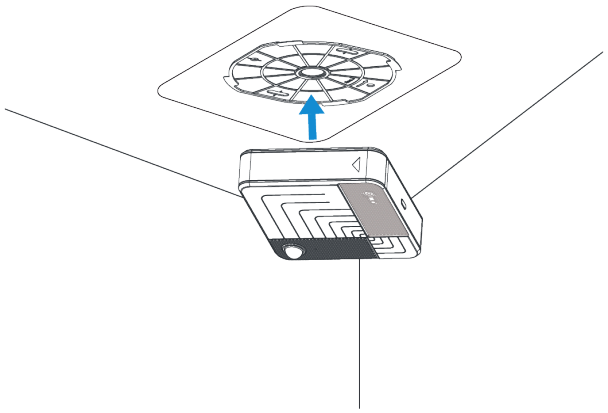

Step 4: Rotate the device clockwise until you hear a clear “click” sound. Gently pull on the device to ensure it does not move, confirming that the installation is secure.

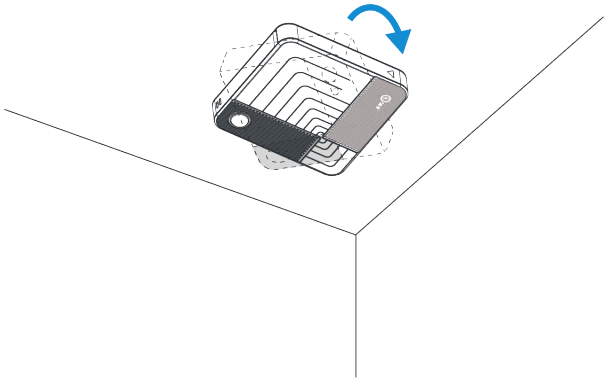

Step 5: Remove the lens film and ready to use.

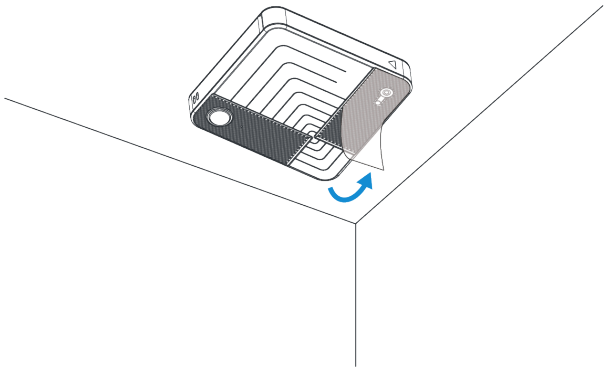

Adhesive Backed Installation

Note:

To ensure the devices are securely installed and prevent them from falling due to adhesive peeling, please strictly adhere to the following requirements:

1. Install the device on a dry, smooth, sturdy, grease-free wall.
2. Do not install the device on rough, damp, crumbling, greasy, or wallpapered walls.
3. Before installation, wipe the wall with a clean cloth to ensure it is free of dust and grease.
4. After adhering the device to the wall, press firmly to ensure it is fully adhered. Allow 24 hours for the best adhesion results.
5. If the wall conditions do not meet the above requirements, choose an alternative installation method, such as screw fixation.

Step 1: Take out the adhesive backing from the packing list, peel off the protective film, and apply adhesive backing to the mounting bracket.

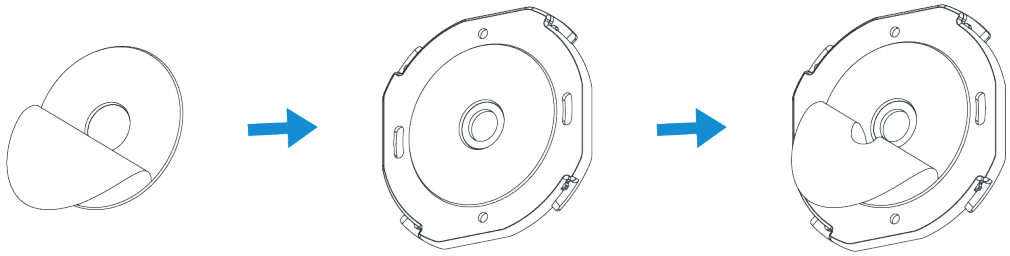

Step 2: Use the installation positioning sticker to mark the positions of the 4 holes as need. Afterwards, remove the sticker to ensure the adhesive backing adheres seamlessly to the wall.

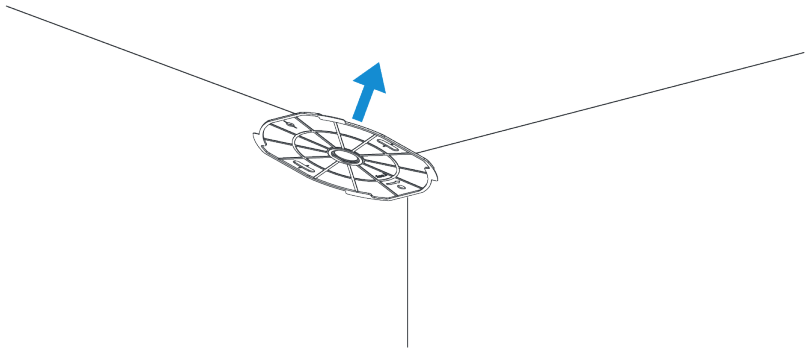

Step 3: Hold both sides of the device with your hands. Align the slots on the back of the device with the hooks on the bracket.

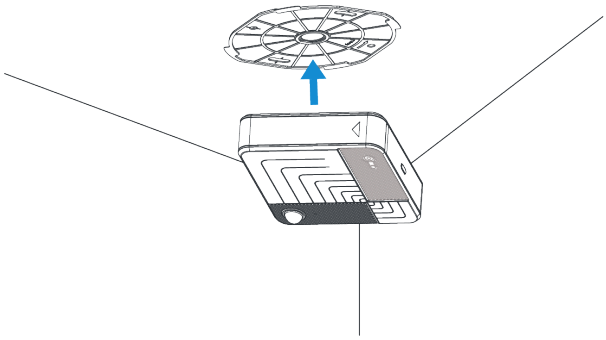

Step 4: Rotate the device clockwise until you hear a clear “click” sound. Gently pull on the device to ensure it does not move, confirming that the installation is secure.

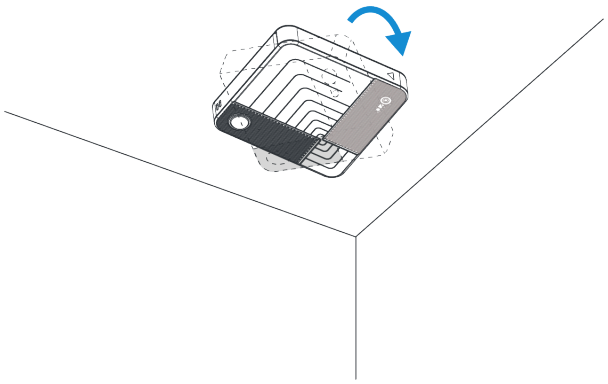

Step 5: Remove the lens film and ready to use.

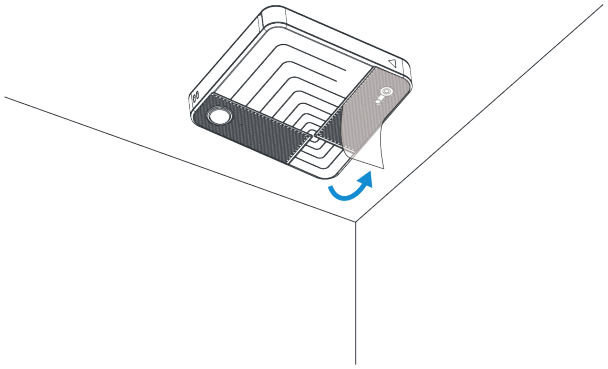

Factors Affecting Accuracy

The following conditions may reduce detection performance:

1. **Small or Obstructed Target:** The target’s head and shoulders are too small in the frame or partially blocked.
2. **Poor Positioning:** The target is too close to the frame edge (outside the optimal detection zone), where lens distortion may impair recognition.
3. **Low Background Contrast:** The target's color blends with the background, making contour detection difficult.
4. **Human-like Interferences:** Objects within the field of view resemble human shapes, causing potential misidentification.
5. **Improper Lighting:** Ambient brightness is below the device’s operating range (50 lux).

Chapter 6. Operation Guide

Bluetooth Configuration

1. Download and install “Milesight ToolBox” App on an Bluetooth-supported smartphone.
2. Enable Bluetooth and location function on the smartphone.
3. Open “Milesight ToolBox” App and switch the reading mode to “Bluetooth”. Tap “Bluetooth Read” to automatically search for nearby devices to connect. The default Bluetooth name is `VS321-xxxxxxx`(5th to 11th of device SN) and the default login password is 123456.
4. When connecting to Bluetooth for the first time, you need to set the Bluetooth password. After the setup is completed, you can get the basic information of the product.

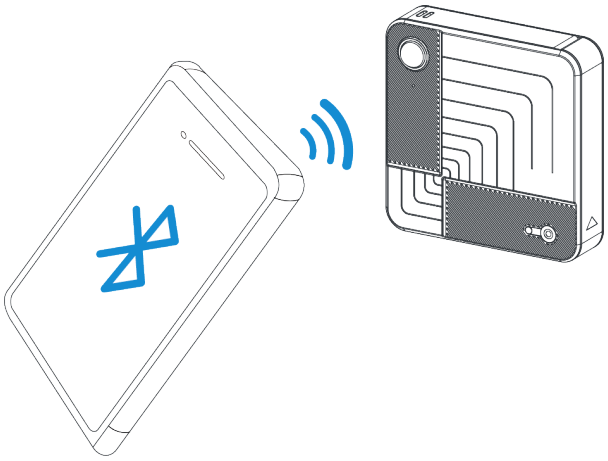

Note:

1. The Bluetooth connection will be terminated if there’s no data interaction within 3 minutes. It will request to connect again.
2. The device can connect to only one smartphone via Bluetooth at a time. For example, if the device is connected to Smart phone A via Bluetooth, the connection will be terminated after it is connected to Smartphone B.

General Setting

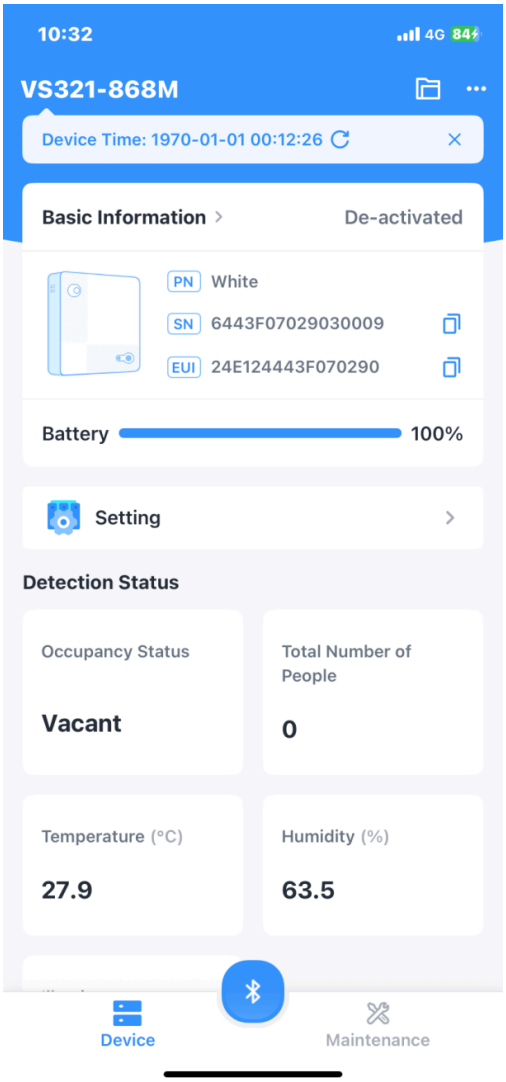

Parameters	Description
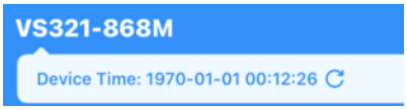	Click to synchronize time, disappears after first click.
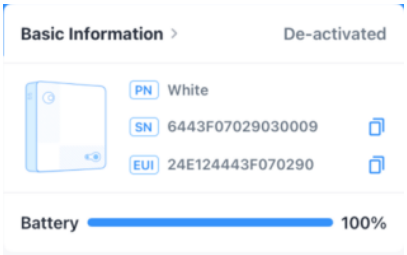	Basic information page of the device.

Parameters	Description
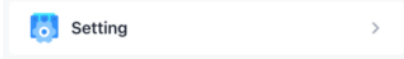	Configuration information for the device, including general settings and communication settings.
	Status display page, which presents different information depending on the mode.
	Tap to read device again or replace connected Bluetooth device.
	Maintenance settings page, for details see Maintenance.

People Counting

People Counting mode counts the total number of people in the detection regions.

Step 1: Choose Detection Function as **People Counting**. Set up detection-related parameters.

Step 2: Click **Edit** to draw Detection Regions. Up to 10 detection regions can be added. If the detection region is not drawn, the count is the number of people applies to the entire screen.

Note:
After switching the detection function, please redraw the detection region.

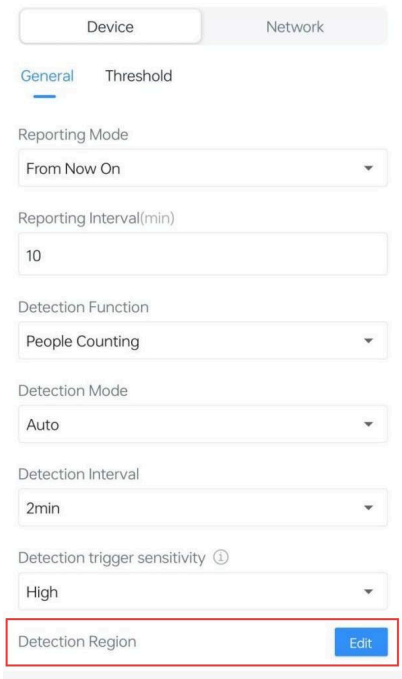

Step 3: Click **Add+** to add a region, then drag and drop region vertices to adjust the shape; add region vertices via the plus sign between two points, up to 8 vertices per region. The regions allows overlapping.

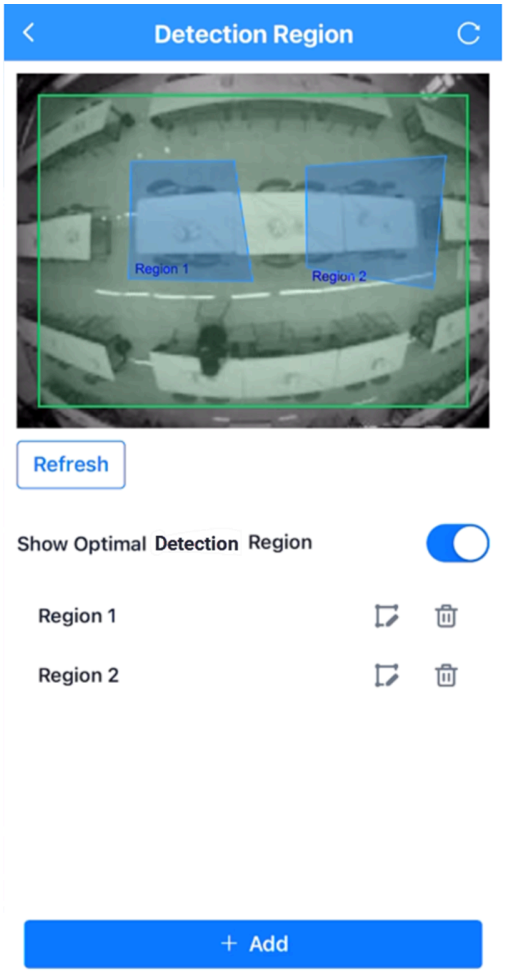

After adding the regions, click the arrow on the upper left corner to save the settings.

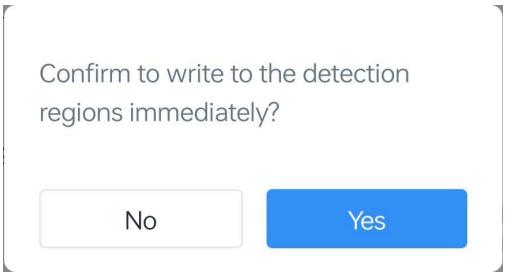

Step 4: Configure Other Setting and Threshold Setting as need, or leave them as defaults. After all configuration, click **Write** to save the settings.

Step 5: Switch to homepage, click to read current device, and click **Refresh** to get the detection status, Detection Status shows the related information.

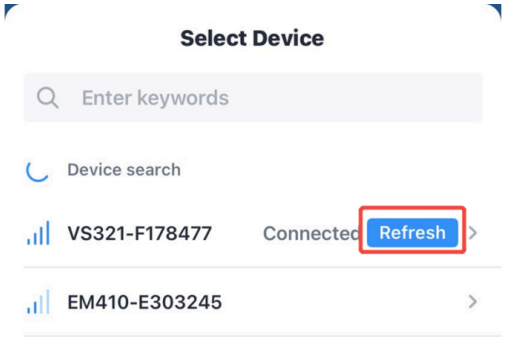

When arrive reporting interval, click **Refresh** again, can see the status value change.

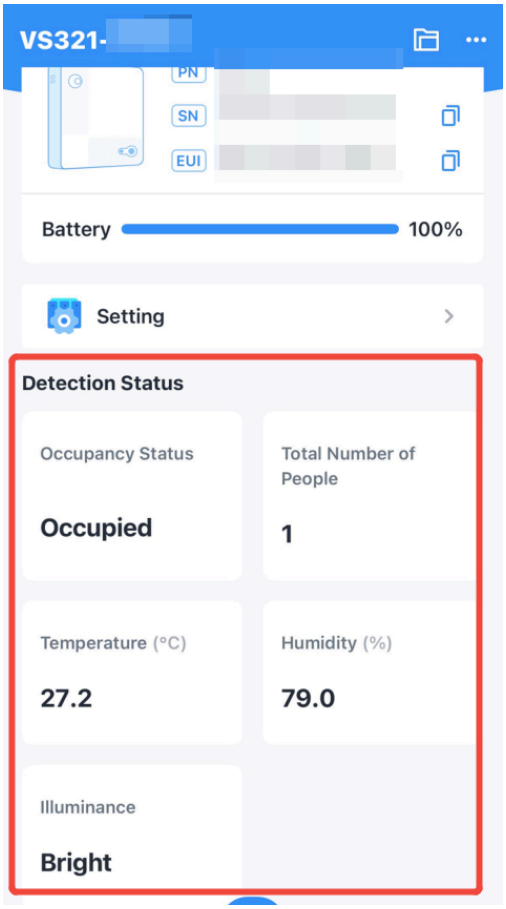

Once the detection interval ends, the total number of people in the regions is displayed. When the number of people in the regions changes from 0 to 1, the occupancy status will change from **Vacant** to **Occupied**.

Desk Occupancy

Desk Occupancy mode can detect every region's occupancy status.

Step 1: Choose Detection Function as **Desk Occupancy**. Set up detection-related parameters.

Step 2: Click **Edit** to draw Detection Regions. Up to 10 detection regions can be added, with at least one required.

Note:
After switching the detection function, please redraw the detection region.

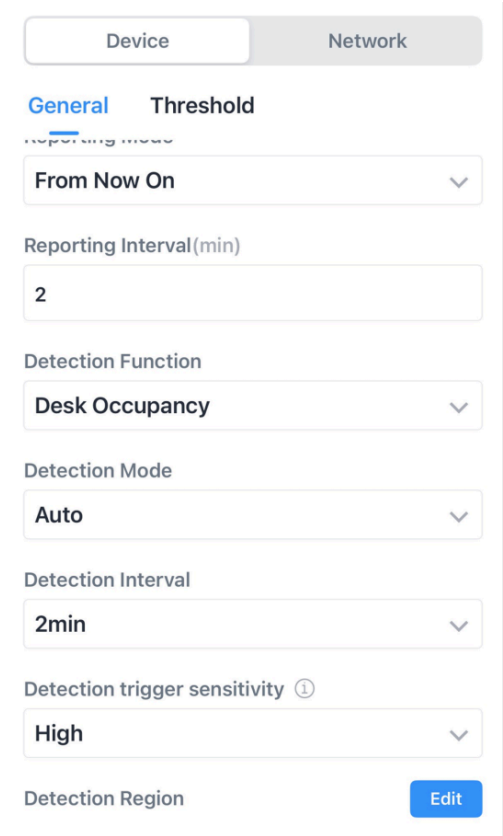

Step 3: Click **Add+** to add a region, then drag and drop region vertices to adjust the shape; add region vertices via the plus sign between two points, up to 8 vertices per region. Region overlap is not permitted.

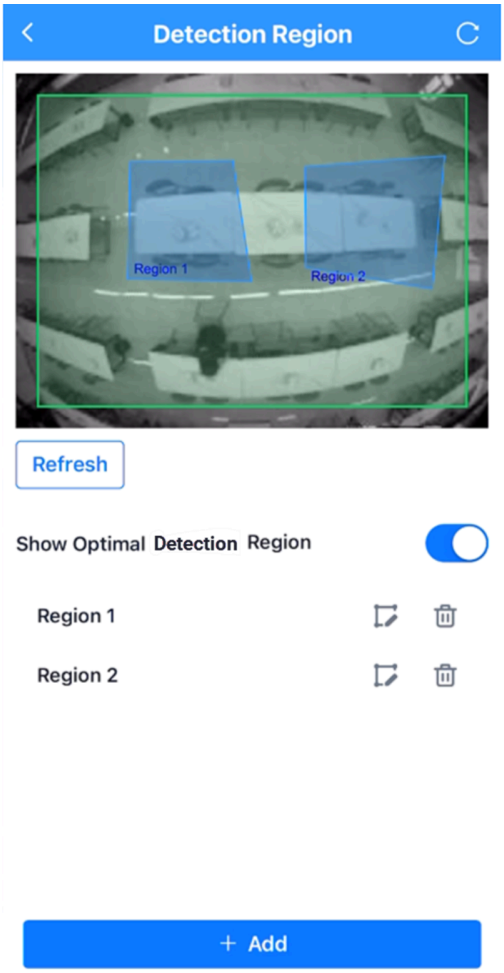

After adding the regions, click on the upper left corner to save the settings.

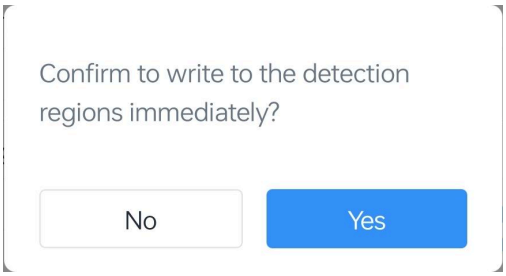

Step 4: Configure Other Setting and Threshold Setting as need, or leave them as defaults. After all configuration, click **Write** to save the settings.

Step 5: Switch to homepage, click to read current device, and click **Refresh** to get the detection status, Detection Status shows the related information.

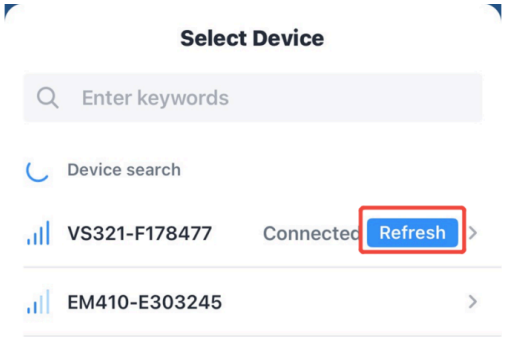

When arrive reporting interval, click **Refresh** again, can see the status value change.

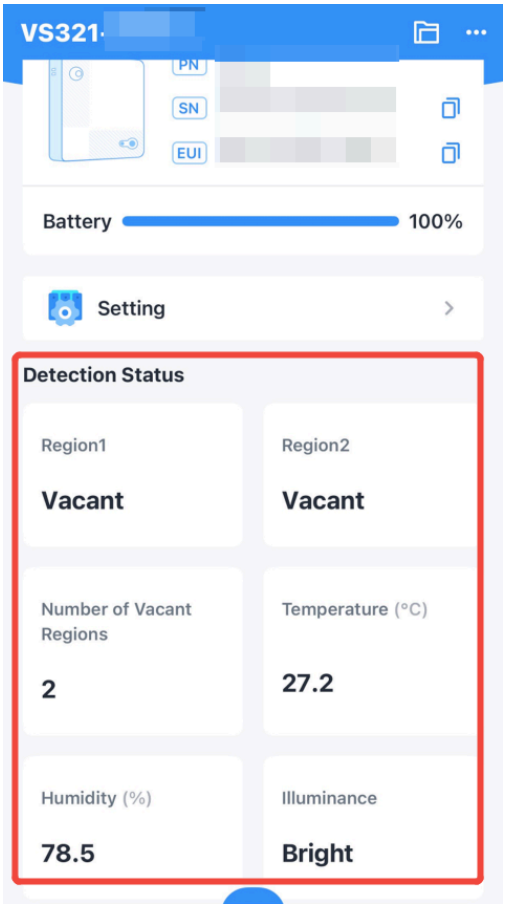

Once the detection interval ends, display the number of vacant regions and the status of each region.

Other Settings

Report-related parameters

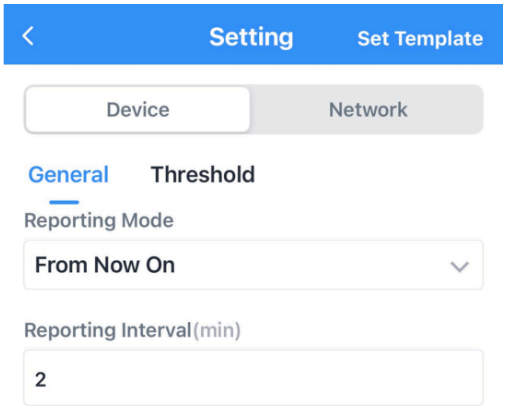

Parameters	Description
Reporting Mode	**On the Dot:** Report at each integer moment. For example, current time is 0:07, when the interval is set to 10 minutes, it will report at 0:10, 0:20, 0:30, and so on. **From Now On:** Begin reporting from this moment onwards and regularly report based on the interval cycle.
Reporting Interval	The interval of reporting battery level, temperature, humidity, current total number of people (or regions occupancy status), illuminance status and detection status to network server. Default: 10 min, Range: 2 ~ 1440 min. **Note:** The reporting interval should be greater than the detection interval.

Detection-related parameters

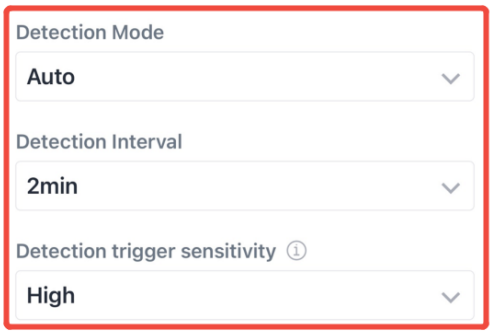

Parameters	Description
Detection Mode	Whether the device uses PIR trigger detection or RGB constant work detection. **Auto:** When the PIR senses a person's activity, it will actively scan the state of the detection region at the end of the detection interval; if no one is present during the entire detection interval, this detection will be stopped to save power. **Always On:** The device has been acquiring images and scanning the state of the detection region, whether or not anyone is in the detection region.
Detection Interval	Set interval for the device to capture images, scan region status and collect sensor data. The results of a detection interval will be available at the conclusion of the interval.
Detection Trigger Sensitivity	Appears when Auto is selected for detection mode. When no one is present and the device triggers detection, it is recommended to turn down the sensitivity. When someone is present, but the device does not detect, it is recommended to turn up the sensitivity.

Other parameters

Set up Time-related settings, Illuminance setting and other general settings.

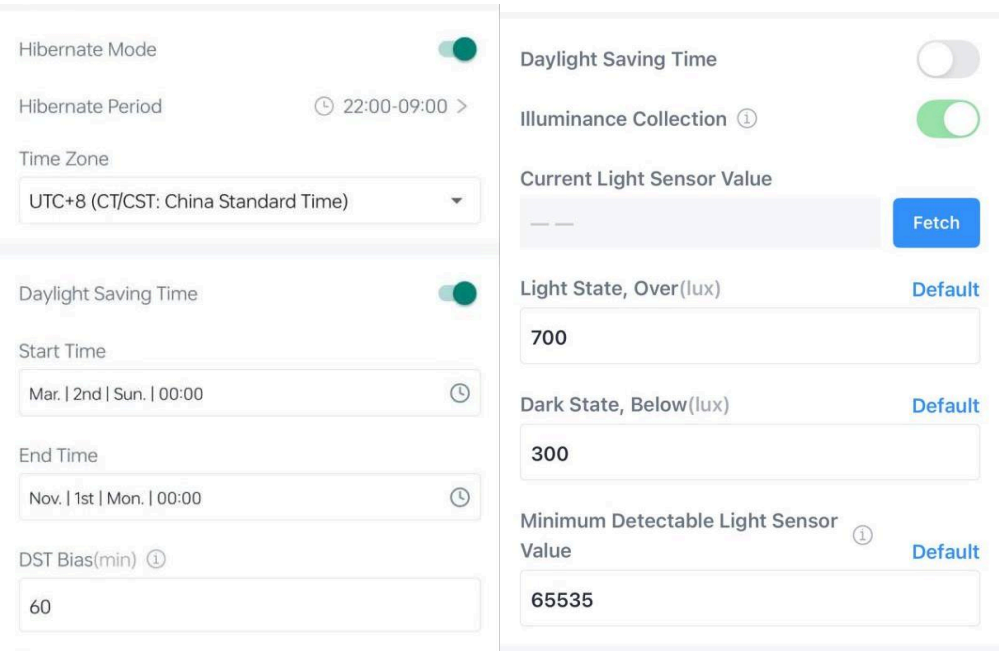

Parameters	Description
Hibernate Mode	Disable or enable hibernate mode to stop detecting and reporting during a period. **Hibernate Period**: Set the period of hibernate.
Time Zone	Set the time zone of the current location. When you click **Sync** button of ToolBox App to sync time, the device will also sync the time zone from smartphone automatically. 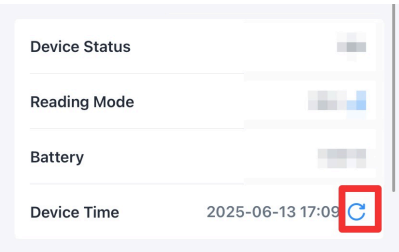
Daylight Saving Time	Enable or disable Daylight Saving Time (DST). It only works with this device and does not affect the network server. **Start Time:** the start time of DST time range. **End Time:** the end time of DST time range.

Parameters	Description
	DST Bias: the DST time will be faster according to this bias setting.
Illuminance Collection	
Current Light Sensor Value	Click **Fetch** to retrieve the current illuminance value. This value is only for reference.
Light State, Over	If the light is higher than this value, the illuminance status is displayed and reported as **Bright**.
Dark State, Below	If the light is lower than this value, the illuminance status is displayed and reported as **Dim**.
Minimum Detectable Light Sensor Value	The device will not be able to detect the light when it is below this value. **Note:** It is recommended that the ambient illumination be set to above 50 lux to ensure optimal detection performance.
Data Storage	
Data Storage	Disable or enable to store data locally. The stored data can be exported as CSV format file and saved to smartphone via ToolBox. 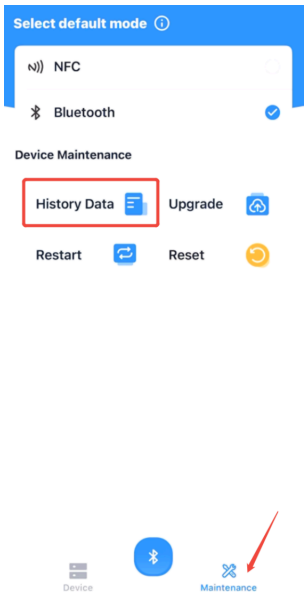

Parameters	Description
	Note: 1. It is necessary to sync the time to ensure the data is stored in correct time. 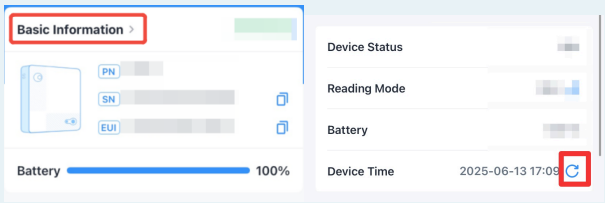 2. The device will still store the data even the network status is de-activated. 3. ToolBox App can only export the last 14 days' data at most.
Data Retransmission	Enable this feature to ensure the network server can receive all data even if the network is down for some time. Before using this feature, please follow below steps to complete the relevant prerequisites: **Step 1:** Ensure the data storage is enabled and the device time is correct. **Step 2:** Go to **Setting > Network > LoRaWAN** to enable rejoin mode and set the number of packets sent. 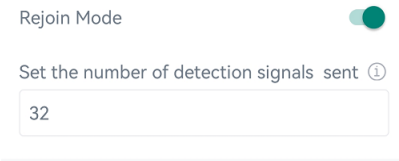 For example, the device will send LinkCheckReq MAC packets to the network server regularly to check any network disconnection; if there is no response for 8+1 times, the join status will change to de-active and the device will record a data lost time point (the time it reconnected to the network). **Step 3:** Ensure the device is always on-line and powered at all times.

Parameters	Description
	After the network connection is restored, the device will send the lost data from the point in time when the data was lost according to the data retransmission interval (600s by default). **Note:** 1. If the device is rebooted or re-powered when data retransmission is not completed, the interrupted retransmission data will be retransmitted first after the network is reconnected to the network, and then the newly triggered retransmission data will be transmitted. 2. If the network is disconnected again during data retransmission, it will only send the latest disconnection data. 3. The retransmission data format is started with “20ce”, please refer to section Historical Data Enquiry. 4. Data retransmission will increase the uplinks and shorten the battery life.
Other	
Bluetooth Name	Customize the Bluetooth name. The default Bluetooth name is VS321-XXXXXXX
Remember your password	Enable to avoid entering the password every time once you connect to Bluetooth.
Change Password	Change the password for ToolBox App to write to this device.

Threshold Setting

The device can set temperature and humidity threshold. Enable the threshold settings and enter the threshold.

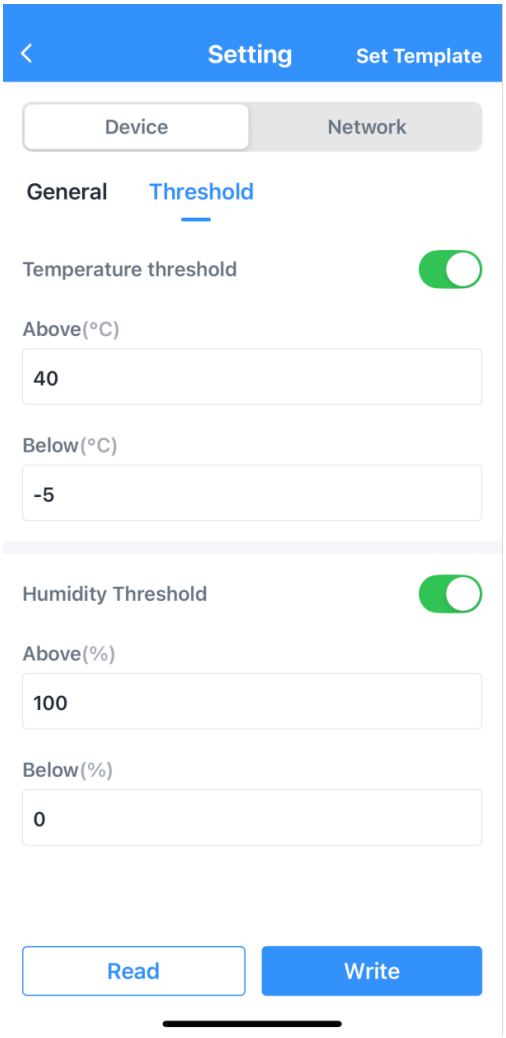

Parameters	Description
Temperature Threshold	When the detected temperature is outside the set value or range during the detection interval, the device will send the alarm packet once. Only when the threshold is released and re-triggered, the device will report the threshold alarm packet again.
Humidity Threshold	When the detected humidity is outside the set value or range during the detection interval, the device will send the alarm packet once. Only when the threshold is released and re-triggered, the device will report the threshold alarm packet again.

Network Settings

LoRaWAN® Settings

Parameters	Description
Device EUI	Unique ID of the device which can be found on the device. **Note:** please contact sales for device EUI list if you have many units.
App EUI	The default App EUI (join EUI) is 24E124C0002A0001.
Application Port	The port used for sending and receiving data, the default port is 85.
LoRaWAN® Version	V1.0.2 and V1.0.3 are available.
Work Mode	It's fixed as Class A.
Confirmed Mode	If the device does not receive ACK packet from network server, it will resend data once.
Join Type	OTAA and ABP mode are available. **Note:** it's necessary to select OTAA mode if connecting device to Milesight Development Platform.
Application Key	Appkey for OTAA mode, default value: "Device EUI" + "Device EUI" (since Q4 of 2025). Example: 24e124123456789024e1241234567890 **Note:** • The default value of earlier devices is 5572404C696E6B4C6F52613230313823. • Please contact sales before purchase if you require random App Keys.

Parameters	Description
Rejoin Mode	Reporting interval≤35 mins: the device will send a specific number of LinkCheck-Req MAC packets to the network server every reporting interval or every double reporting interval to validate connectivity; If there is no response, the device will re-join the network. Reporting interval > 35 mins: the device will send a specific number of LinkCheck-Req MAC packets to the network server every reporting interval to validate connectivity; If there is no response, the device will re-join the network. **Note:** 1. Only OTAA mode supports rejoin mode. 2. The actual sending number is **Set the number of packets sent** +1.
Device Address	DevAddr for ABP mode, default is the 5th to 12th digits of SN.
Network Session Key	Nwkskey for ABP mode, the default is 5572404C696E6B4C6F52613230313823.
Application Session Key	Appskey for ABP mode, the default is 5572404C696E6B4C6F52613230313823.
Supported Frequency	Enable or disable the frequency to send uplinks. If frequency is one of CN470/AU915/US915, enter the index of the channel to enable in the input box, making them separated by commas. **Examples:** 1, 40: Enabling Channel 1 and Channel 40 1-40: Enabling Channel 1 to Channel 40 1-40, 60: Enabling Channel 1 to Channel 40 and Channel 60 All: Enabling all channels Null: Indicate that all channels are disabled
ADR Mode	Enable or disable network server to adjust Spreading Factor, Bandwidth an Tx Power to optimize data rates, airtime and energy consumption in the network.

Parameters	Description
Spreading Factor	If ADR mode is disabled, the device will send uplink data following this SF parameter. The higher the spreading factor, the longer the transmission distance, the slower the transmission speed and the more the consumption.
Tx Power	Tx power (transmit power) refers to the strength of the outgoing signal transmitted by the device. This is defined by LoRa alliance.
RX2 Data Rate	RX2 data rate to receive downlinks or send D2D commands..
RX2 Frequency	RX2 frequency to receive downlinks or send D2D commands. Unit: Hz

Milesight D2D Settings

Milesight D2D protocol is developed by Milesight and used for setting up transmission among Milesight devices without gateway. When the Milesight D2D settings is enabled, the device can work as a D2D controller to send control commands to trigger Milesight D2D agent devices.

Note:
Since the minimum detection interval is 2 minutes, the D2D function will be not triggered immediately upon event detection but only after the current at least 2-minute detection interval is completed.

1. Configure the RX2 datarate and RX2 frequency.

Note:
It is suggested to change the default values if there are many LoRaWAN® devices around.

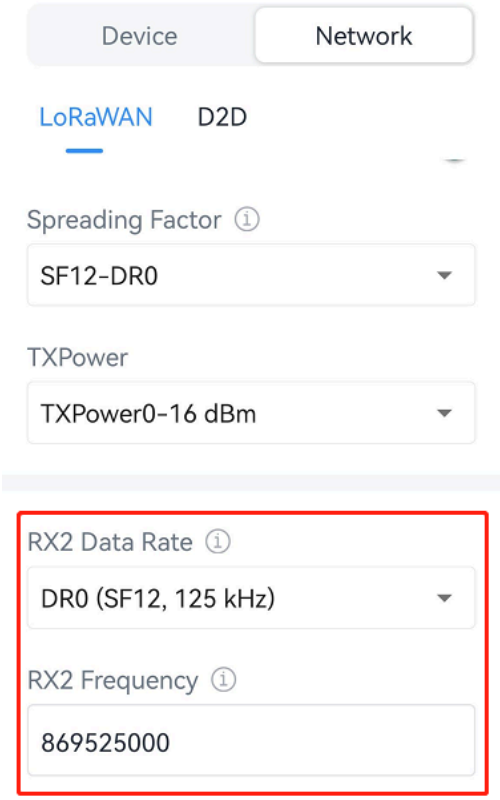

2. Enable Milesight D2D feature and define a unique D2D key that is the same as Milesight D2D agent devices. (Default D2D key: 5572404C696E6B4C6F52613230313823)

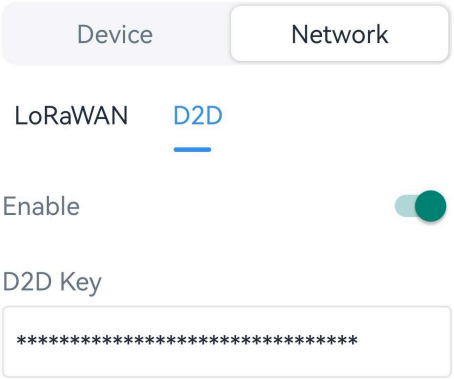

3. Enable one of statuses and configure 2-byte hexadecimal Milesight D2D command.

Note:

- If you enable **LoRa Uplink**, a LoRaWAN® uplink packet that contains corresponding alarm status will be sent to gateway after the Milesight D2D command packet. Otherwise, the alarm packet will not send to LoRaWAN® gateway.
- If you enable the control time setting, Milesight D2D agent devices will take corresponding actions within this duration after receiving commands from Milesight D2D controller. This feature is currently under development for Milesight D2D agent devices.

Example

When Occupied is triggered, VS321 will send D2D command 0004 to Milesight D2D agent devices, which perform the corresponding action for 5 minutes.

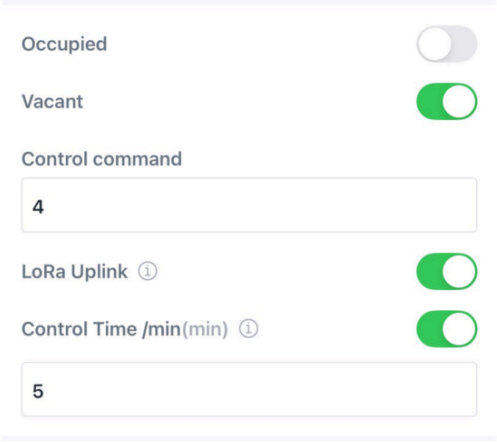

Maintenance

Upgrade

This chapter describes the steps to upgrade the device via ToolBox App.

1. Download firmware from Milesight official website to your smartphone.
2. Read the target device via ToolBox App, click **Upgrade** to upload the firmware file.
3. Click **Upgrade** to upgrade the device.

Note:
Operation on ToolBox is not supported during an upgrade.

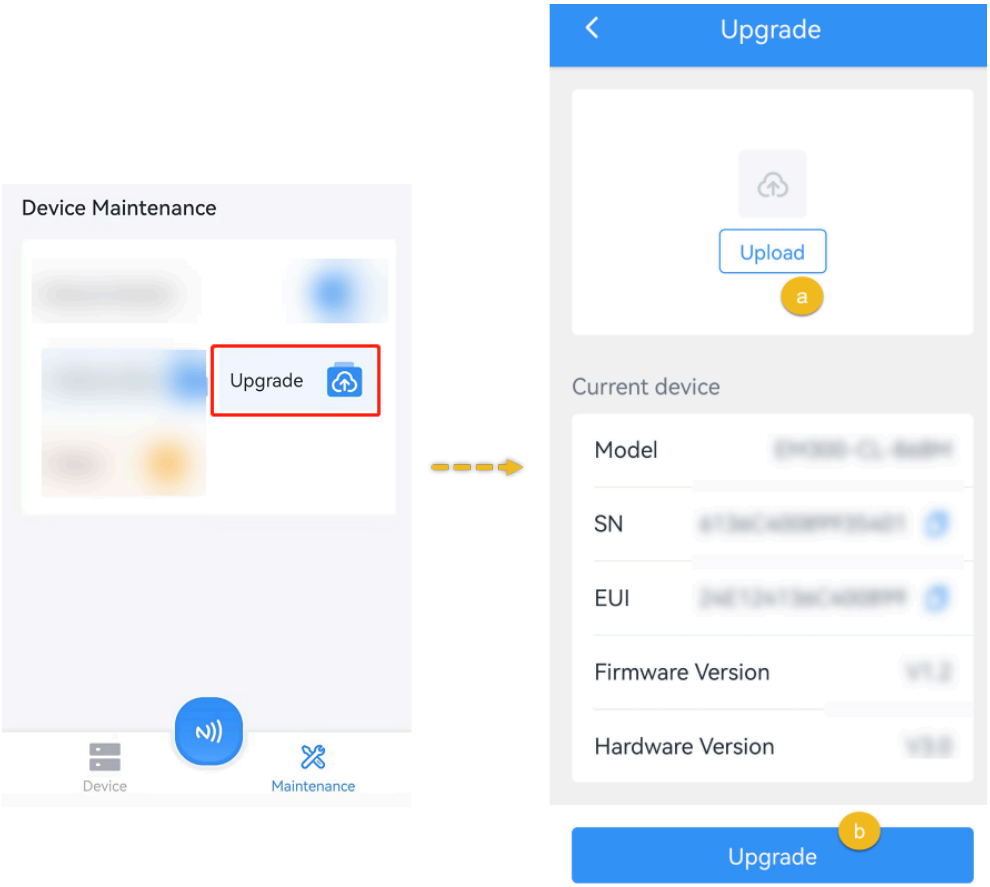

Backup and Restore

This device supports configuration backup for easy and quick device configuration in bulks. Backup and restore is allowed only for devices with the same model and frequency band.

Backup and Restore

1. Launch ToolBox App, access the device via bluetooth to read the configuration.

2. Edit the configuration as required, click **Set Template** to save current configuration as a template to the ToolBox App.

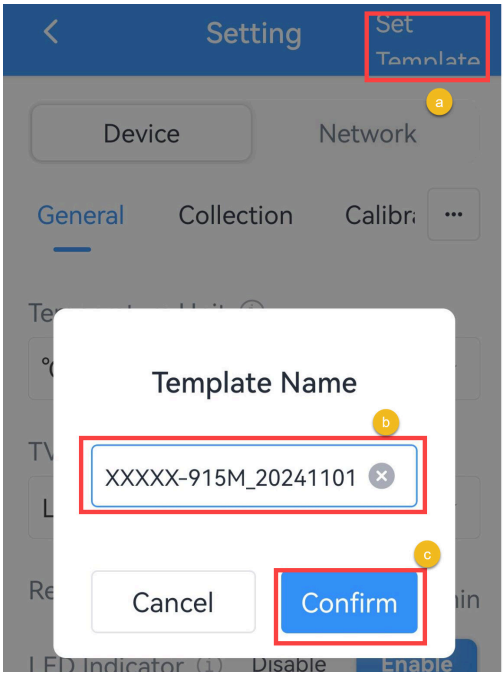

3. Go to **Device >Template** page.

4. Select and click the target template, click **Write** to import the configuration to target devices.

Export and Delete Template

1. Check the box of the target template.

2. Click **Export** to export this template as JSON format file and save it to the smartphone, click **Delete** to delete this template from your ToolBox App.

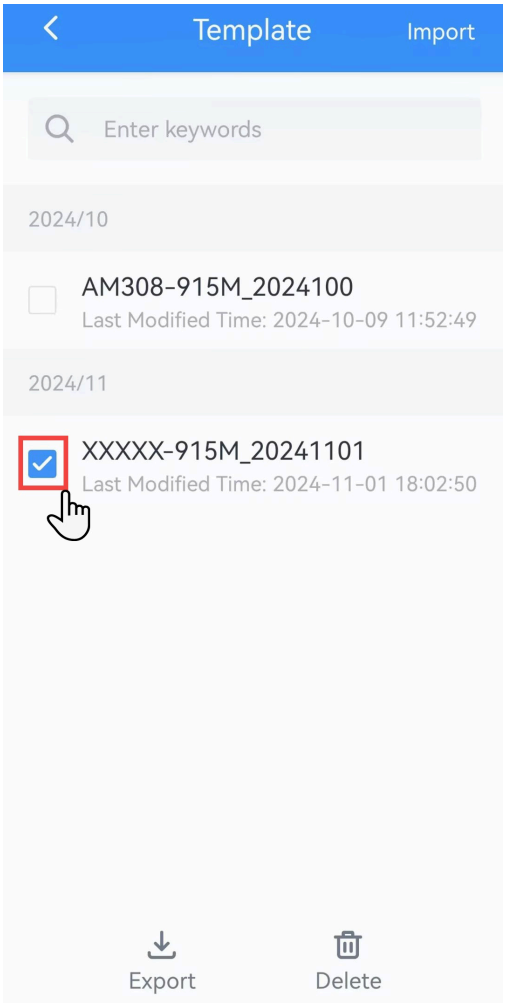

Reset to Factory Default

Via Hardware: Hold on the multi-function button for more than 10s until the LED indicator quickly blinks.

Via ToolBox App: Click **Reset** to reset the device.

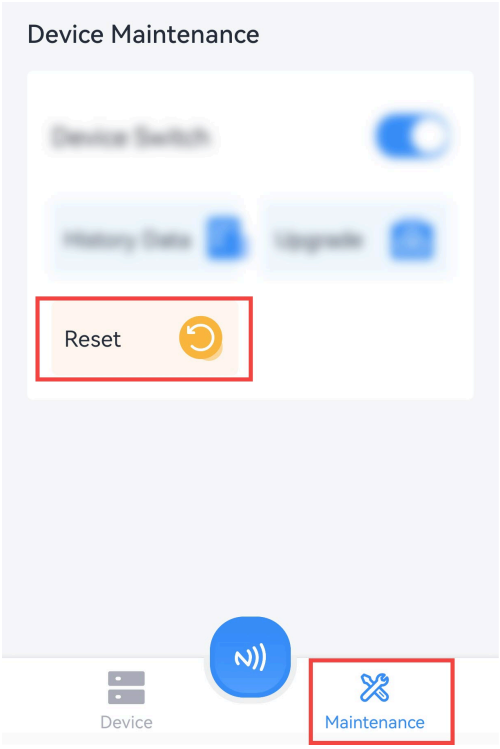
Device Maintenance
Reset
Device
Maintenance

Chapter 7. Uplink Packets and Downlink Commands

Overview

All messages are based on following format (HEX), the Data field should follow little-endian:

Channel1	Type1	Data1	Channel2	Type2	Data2	Channel3	...
1 Byte	1 Byte	N Bytes	1 Byte	1 Byte	N Bytes	1 Byte	...

For decoder examples please find files on https://github.com/Milesight-IoT/SensorDecoders.

Uplink Packets

Basic Information

The device will report a basic information packet whenever joining the network.

Item	Channel	Type	Byte	Description
Power On	ff	0b	1	Device is on
Protocol Version	ff	01	1	Example: 01=V1
Serial Number	ff	16	8	16 digits
Hardware Version	ff	09	2	Example: 03 10 = V3.1
Firmware Version	ff	0a	2	01 14 => V1.14
Device Type	ff	0f	1	00: Class A, 01: Class B, 02: Class C, 03: Class C to B
TSL Version	ff	ff	2	0100=>1.0
Reset Report	ff	fe	1	ff

Example:

ff0f00 ffff0100 ff090100 ff0a0101 ff166791d19604050005 ff0bff ff0101 fffeff		
Channel	**Type**	**Value**
ff	0f	Device Type: 00(Class A)

ff0f00 ffff0100 ff090100 ff0a0101 ff166791d19604050005 ff0bff ff0101 fffeff		
Channel	**Type**	**Value**
ff	ff	TSL Version: 0100 (V1.0)
ff	09	Hardware Version: 0100 (V1.0)
ff	0a	Firmware Version: 0101(V1.1)
ff	16	SN: 6791d19604050005
ff	0b	Power On: ff
ff	01	Protocol Version: 01(V1)
ff	fe	Reset Report: ff

Periodic Report

The device supports the sensor data according to reporting interval.

Item	Channel	Type	Byte	Description
Battery Level	01	75	1	UINT8, Unit: %, [1-100]
Temperature	03	67	2	INT16*0.1, Unit: °C
Humidity	04	68	1	UINT8*0.5, Unit: %RH
People Counting	05	fd	2	UINT16, total number of persons in the detection regions
Desk Occupancy	06	fe	4	Byte 1-2: Enabled status of per region • Bit15-10: 000000; • Bit9-0: 1-Enable, 0-Disable for per bit Byte 3-4: Occupancy status of per region • Bit 15-10: 000000; • Bit 9-0: 1-Occupancy, 0-Vacant for per bit
Illumination	07	ff	1	01-Bright, 00-Dim

Item	Channel	Type	Byte	Description
Detection Status	08	f4	2	Byte1: 02 Byte2: 00-Normal detection, 01-Undetectable
Timestamp	0a	ef	4	Current timestamp, only available when reporting mode is on the dot. Unit: s.

Example:

1. Enable Desk Occupancy mode and the reporting mode is from now on.

017564 03671101 07ff00 08f40200 04686a 06fe03000200		
Channel	**Type**	**Value**
01	75	Battery Level: 64 => 100%
03	67	Temperature: 1101 => 0111 =>273*0.1 =27.3°C
07	ff	Illumination: 00=>Dim
08	f4	Detection Status: 02 00=>Normal detection
04	68	Humidity: 6a=>106*0.5=53%RH
06	fe	Desk Occupancy: 03 00=>00 03=>00000000 00000011=>Enable 2 regions 02 00=>00 02=>00000000 00000010=> Region 2 is Occupied, Region 1 is Vacant.

2. Enable People Counting mode and the reporting mode is on the dot.

0aef94715568 07ff00 08f40200 05fd0300 017564 03671301 046880		
Channel	**Type**	**Value**
0a	ef	Timestamp: 94715568=>68557194=>1750430100s
07	ff	Illumination: 00=>Dim
08	f4	Detection Status: 02 00=>Normal detection

0aef94715568 07ff00 08f40200 05fd0300 017564 03671301 046880		
Channel	**Type**	**Value**
05	fd	People Counting: 03 00=>00 03=>3=>Total number of persons in the current regions is 3
01	75	Battery Level: 64 => 100%
03	67	Temperature: 1301 => 0113 =>275*0.1 =27.5°C
04	68	Humidity: 80=>128*0.5=64%RH

Alarm Report

The device supports to report below types of alarm report packets.

Item	Channel	Type	Byte	Description
Temperature Threshold	83	67	3	Byte 1-2: INT16*0.1, Unit: °C Byte 3: 01-Threshlod Alarm, 00-Threshlod Alarm Release
Humidity Threshold	84	68	2	Byte 1: UINT8*0.5, Unit: %RH Byte 2: 01-Threshlod Alarm, 00-Threshlod Alarm Release

Example:

Report when the temperature value reaches the threshold.

8367 1301 01		
Channel	**Type**	**Value**
83	67	Temperature Threshold: 1301=> 0113=275*0.1=27.5 °C 01-Threshlod Alarm

Historical Data

The device will report retransmission data or stored data as below example.

Item	Channel	Type	Byte	Description
Historical Data	20	ce	9	Byte 1-4: Timestamp, Unit:s Byte 5: 01-People Counting Byte 6-7: Total number of people Byte 8-9: 0000
				Byte 1-4: Timestamp, Unit:s Byte 5: 00-Desk Occupancy Byte 6-7: Enable status of per region, • Bit 15-10: 000000; • Bit 9-0: 1-Enable, 0-Disable for per bit Byte 8-9: Occupancy status of per region, • Bit 15-10: 000000; • Bit 9-0: 1-Occupancy, 0-Vacant for per bit

Example

20ce 1932ec64 01 0500			
Channel	**Type**	**Time Stamp**	**Value**
20	ce	1932ec64 => 64ec3219 = 1693200921s	01 => People Counting 0500=> 0005=5=>Total number of people

Downlink Commands

This device supports downlink commands for configuration and control. The downlink application port is 85 by default.

General Setting

Item	Channel	Type	Byte	Description
Reporting Mode	f9	10	1	00-Form now on, 01-On the dot
Detection Mode	f9	6b	1	00-Auto, 01-Always
Immediate Detection	f9	6c	1	ff
Reset	f9	6e	1	ff
Reboot	ff	10	1	ff
Reporting Interval	ff	8e	3	Byte 1: 00 Byte 2-3: Interval, [2~1440], Unit: min
Detection Interval	ff	02	2	UNIT 16, [2~60], Unit: min
Illuminance Collection	ff	06	9	Byte1: 1c Byte2-3: Dark State, UINT16, Unit: lux, Byte4-5: Light State, UINT16, Unit: lux Byte6-9: 00000000
Data Storage	ff	68	1	00: Disable, 01: Enable
Data Retransmission	ff	69	1	00: Disable, 01: Enable
Data Retrans-mission Interval	ff	6a	3	**Byte 1**: 00 **Byte 2-3**: UINT16, Unit: s, Range: 30~1200, Default: 600

Example:

1. Set report interval as 20 minutes.

ff8e001400		
Channel	**Type**	**Value**
ff	8e	1400=>0014=20minutes

2. Set Detection Interval as 2 min.

ff02 0200		
Channel	**Type**	**Value**
ff	02	0200=> 0002=2min

3. Set Over 800 lux as Light Status and Below 200 lux as Dark Status.

ff06 1c 0002 2003 00000000		
Channel	**Type**	**Value**
ff	06	Dark Status: c800=> 00c8=200 Light Status: 2003=>0320=> 800 lux

4. Enable data storage feature.

ff6801		
Channel	**Type**	**Value**
ff	68	01=Enable

Threshold Setting

Item	Channel	Type	Byte	Description
Threshold setting	ff	06	9	Byte1:

Item	Channel	Type	Byte	Description
				• Bit 2-0: 000-disable; 001-below; 010-over; 011-within; 100-below or over • Bit 5-3: 001-Temperature, 010-Humidity • Bit 7-6: 00 Byte2-3: Min. Value • Temperature, INT16*0.1, Unit: °C • Humidity, UINT16*0.5, Unit: %RH Byte4-5: Max. Value • Temperature, INT16*0.1, Unit: °C • Humidity, UINT16*0.5, Unit: %RH Byte6-9: 00000000

Example:

Set Temperature Threshold as below 5°C or over 37°C.

ff06 0c 3200 7201 00000000		
Channel	**Type**	**Value**
ff	06	0c=>00001100=Temperature, below or over 3200=> 0032 => 50*0.1=5°C 72 01=> 01 72 => 370*0.1=37°C

LoRaWAN® Setting

Modifying the following parameters triggers the device to rejoin the network.

Item	Channel	Type	Byte	Description
ADR Mode	ff	40	1	01-Enable, 00-Disable
Application Port	ff	65	1	[1-223], Default:85

Example:

Set Application Port as 85.

ff65 55		
Channel	**Type**	**Value**
ff	65	55=> 85

Milesight D2D Setting

Item	Channel	Type	Byte	Description
Milesight D2D Feature	ff	84	1	01-enable, 00-disable
Milesight D2D Key	ff	35	8	First 16 digits, last 16 digits are fixed as 0
Milesight D2D Settings	ff	96	8	Byte 1: **People Counting:** 01-Occupied 02-Vacant 03-Dim 04-Occupied/Bright 05-Occupied/Dim **Desk Occupancy:** 01-Region 1 Occupied 02-Region 1 Vacant 03-Region 2 Occupied 04-Region 2 Vacant ... 13-Region 10 Occupied 14-Region 10 Vacant

Item	Channel	Type	Byte	Description
				Byte 2: 01-enable, 00-disable Byte 3: 01-enable LoRa Uplink, 00-disable LoRa Uplink Byte 4-5: D2D control command Byte 6-7: control time, Unit: min Byte 8: 01-enable control time, 00-disable control time

Example:

Set Milesight D2D settings.

ff96 03 01 01 04e0 0500 01		
Channel	**Type**	**Value**
ff	96	03=> Dim; 01=>Enable; 01=>Enable LoRa Uplink; 04 e0=>e0 04, Control Command is e0 04; 05 00=>00 05, Control time is 5 mins; 01=>Enable Control Time

Historical Data Enquiry

The device supports data retrievability feature to send downlink command to enquire the historical data stored in the device. Before that, ensure the device time is correct and data storage feature was enabled to store data.

Command Format:

Item	Channel	Type	Byte	Description
Enquire Data in Time Point	fd	6b	4	Unix timestamp, Unit: s
Enquire Data in Time Range	fd	6c	8	Byte 1-4: Start timestamp, Unit: s Byte 5-8: End timestamp, Unit: s
Stop Query Data Report	fd	6d	1	ff
Data Retrieva-bility Interval	ff	6a	3	Byte 1: 01 Byte 2-3: UINT16, Unit: s, Range: 30~1200, Default: 600

Reply Format:

Item	Channel	Type	Byte	Description
Enquiry Result	fc	6b/6c	1	00: Enquiry success. The device will report the historical data according to data retrievability interval. 01: Time point or time range invalid 02: No data in this time or time range

Note:

1. Use Unix Timestamp Converter to calculate the time.
2. The device only uploads no more than 300 data records per range enquiry.
3. When enquiring the data in time point, it will upload the data which is closest to the search point within the reporting interval range. For example, if the device's reporting interval is 10 minutes and users send command to search for 17:00's data, if the device find there is data stored in 17:00, it will upload this data; if not, it will search for data between 16:50 to 17:10 and upload the data which is closest to 17:00.

Example:

Enquire the historical data in a time range.

fd6c 64735b63 7c885b63		
Channel	**Type**	**Value**
fd	6c	Start time: 64 73 5b 63 => 63 5b 73 64 = 1666937700s End time: 7c 88 5b 63 => 63 5b 88 7c = 1666943100s

Reply:

fc6c00		
Channel	**Type**	**Value**
fc	6c	00: Enquiry success

20ce 1932ec64 01 0500			
Channel	**Type**	**Time Stamp**	**Value**
20	ce	1932ec64 => 64ec3219 = 1693200921s	01 => People Counting 0500=> 0005=5=>Total number of people

Chapter 8. Services

Milesight provides customers with timely and comprehensive technical support services. End-users can contact your local dealer to obtain technical support. Distributors and resellers can contact directly with Milesight for technical support.

Technical Support Mailbox: iot.support@milesight.com

Online Support Portal: https://support.milesight-iot.com

Resource Download Center: https://www.milesight.com/iot/resources/download-center/

MILESIGHT CHINA

TEL: +86-592-5085280

FAX: +86-592-5023065

Add: Building C09, Software Park Phase III, Xiamen 361024, Fujian, China