Milesight

VS361

Storefront Footfall Sensor

User Guide

14 rue Edouard Petit
42000 St-Etienne

Tel : +33 477 92 03 56
Email : contact@rg2i.com

www.rg2i.com

Contents

Chapter 1. Preface 3

Copyright Statement 3

Safety Instruction 3

Revision History 4

Chapter 2. Product Introduction 5

Overview 5

Packing List 6

Hardware Components 6

Main Components 6

Device Dimensions 8

Chapter 3. Power Supply 9

Chapter 4. DO Wirings 11

Chapter 5. Install the Device 12

Indoor Installation 13

Outdoor Installation 16

Chapter 6. Services 21

Chapter 1. Preface

Copyright Statement

This guide may not be reproduced in any form or by any means to create any derivative such as translation, transformation, or adaptation without the prior written permission of Xiamen Milesight IoT Co., Ltd (Hereinafter referred to as Milesight).

Milesight reserves the right to change this guide and the specifications without prior notice. The latest specifications and user documentation for all Milesight products are available on our official website http://www.milesight.com

Safety Instruction

These instructions are intended to ensure that user can use the product correctly to avoid danger or property loss. Milesight will not shoulder responsibility for any loss or damage resulting from not following the instructions of this operating guide.

Warning:

Serious injury or death may be caused if any of these warnings is neglected.

- The installation and maintenance must be conducted by a qualified service person and should strictly comply with the electrical safety regulations of the local region.
- Disconnect the device power before installation.
- To avoid risk of fire and electric shock, do keep the product away from rain and moisture before installed.

CAUTION:

Injury or equipment damage may be caused if any of these cautions are neglected.

- The device is not intended to be used as a reference sensor, and Milesight will not should responsibility for any damage which may result from inaccurate readings.
- The device must not be disassembled or remodeled in any way.
- Do not place the device close to objects with naked flames.
- Do not place the device where the temperature is below/above the operating range.
- Make sure electronic components do not drop out of the enclosure while opening.

- The device must never be subjected to shocks or impacts.
- Use a soft, dry cloth to clean the lens of the device. Avoid using chemical cleaners.

Revision History

Release Date	Version	Revision Content
Jan. 7, 2026	V1.0	Initial version

Chapter 2. Product Introduction

This chapter describes basic product information.

Overview

The VS361 is a pedestrian traffic counter sensor based on diffuse photoelectric switch technology. It detects passersby by emitting an infrared beam and identifying its reflection off objects, enabling accurate people counting. Positioned as an entry-level, cost-effective solution for outdoor customer flow statistics, it features an IP65 waterproof rating and an adjustable detection range of 1 to 9 meters, ensuring reliable environmental adaptability. It is designed to provide essential data for analyzing foot traffic trends and is a key component for calculating store entry conversion rates within a smart retail analytics ecosystem.

The device can be used in storefront windows, passageways, and similar environments. It has the following features:

- **Proven Reliability & Easy Deployment**
  - Utilizes mature diffuse reflection technology for consistent and dependable detection.
  - A clean design, multiple mounting options, and waterproof cable entries support quick installation and deployment.
  - Supports Power over Ethernet (PoE), providing power through the network cable without requiring additional power wiring.

- **Environmental Resilience**
  - IP65-rated enclosure ensures protection against dust and water, supporting deployment in demanding conditions.
  - Provides an adjustable detection range of up to 9 meters to suit different application scenarios.
  - Delivers stable performance unaffected by ambient temperature variations.

- **Integrated Analytics Ecosystem**
  - Combines seamlessly with VS12X/VS13X indoor people counting sensors and UR32 DI routers to form a comprehensive solution enabling Store Entry Conversion Rate analysis.
  - Supports direct DI device connection for precise and reliable counting.

Packing List

This chapter describes the packing list. You can verify the contents against the following list to ensure all items are present. If any of them are missing or damaged, you can contact your sales representative.

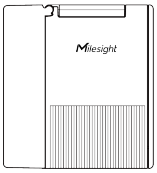

1 × VS361 Sensor

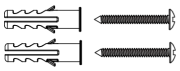

2 × Mounting Kits

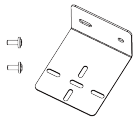

1 × Installation Bracket Kit

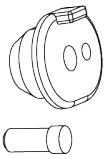

1 × Waterproof Grommet and Plug Set

1 × Warranty Card

1 × Installation Guide

Hardware Components

Main Components

The following figure shows the main components of the device.

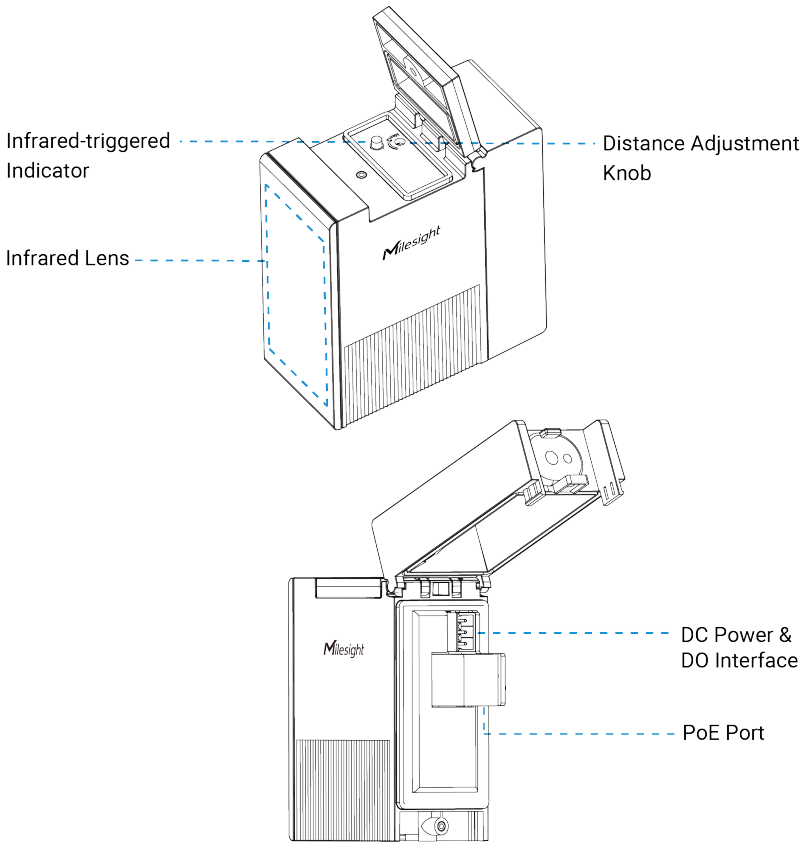

For the description of each component, refer to the following table.

Name	Description
Infrared-triggered Indicator	When an object obstruction is detected, the indicator light illuminates to display the recognition status.
Distance Adjustment Knob	Used to adjust the detection distance by rotating the knob. Rotate clockwise to increase distance; rotate counterclockwise to decrease distance.
Infrared Lens	The core optical component for transmitting and receiving infrared beams. If dust or stains appear on the infrared lens surface, gently wipe with a soft, dry cloth. Avoid using chemical cleaners.
DC Power & DO Interface	Includes three terminals: DC, GND, DO. Power Interface(DC & GND): Power supply interfaces.

Name	Description
	DO Interface (DO & GND): Connects to the DI (Digital Input) of a third-party device. When an object obstruction is detected, this interface outputs a low-level signal.
PoE Port	This port functions solely as an 802.3af PoE Powered Device (PD) input for receiving power. It does not transmit or receive data signals.

Device Dimensions

The following figure shows the device dimensions (unit: mm).

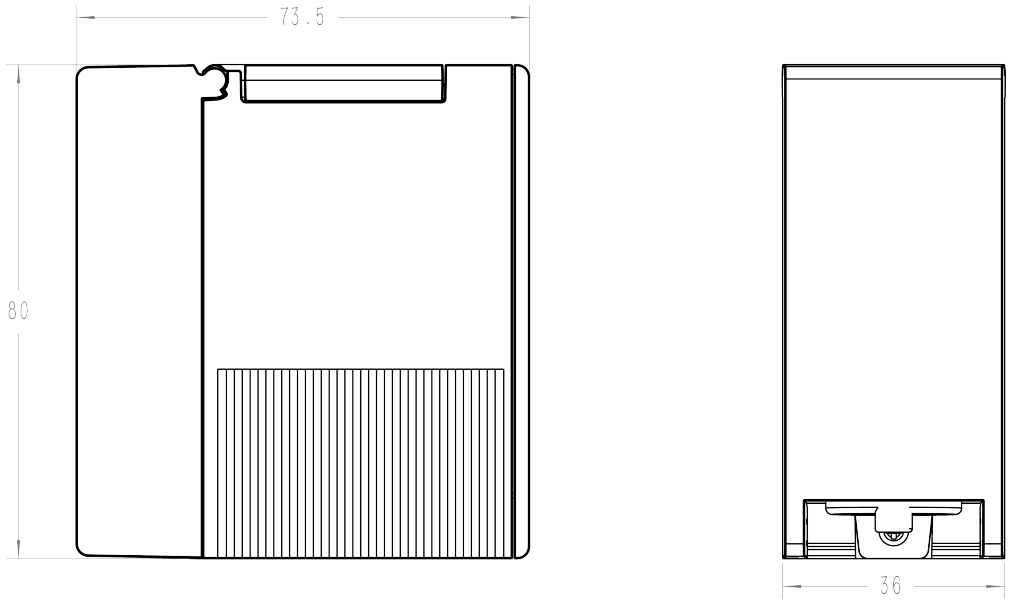

Chapter 3. Power Supply

This section describes how to power on the device.

1. You can choose one of the following power supply methods.
    - The device can be powered by a DC power adapter (12 - 60V, 1 mA).
    - The device can be powered by a PoE switch or router (802.3af compliant).
2. Then connect the cables.

If	Do
Powered by a DC power adapter	Connect to terminals: ◦ VIN: Connect to power supply positive terminal ◦ GND: Connect to power supply negative terminal 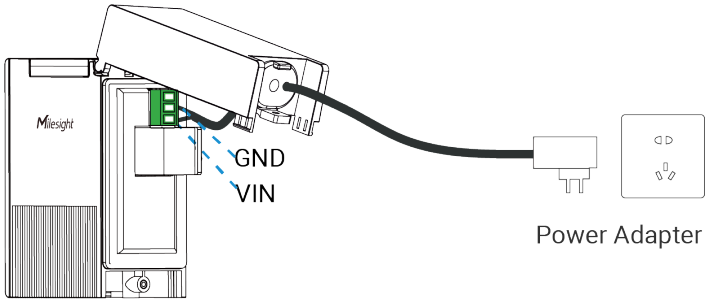 **Note:** Ensure correct polarity. Reversing polarity may damage the device.
Powered by a PoE switch or router	Connect the Ethernet cable: 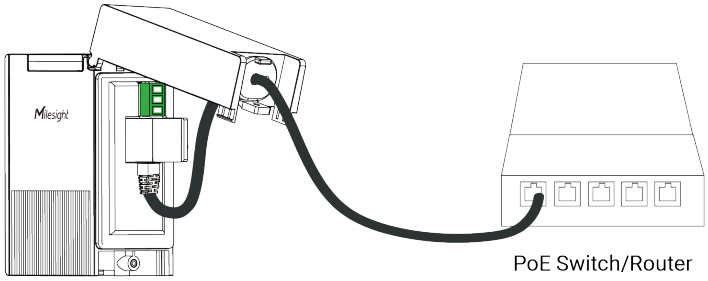

If	Do
	Note: The length of the Ethernet cable crystal head must be between 12 and 20 mm. 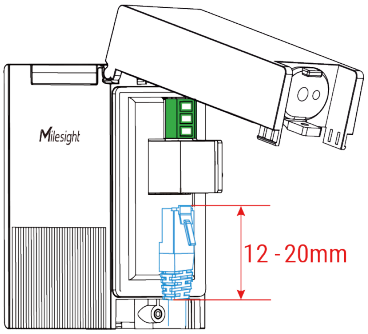

Chapter 4. DO Wirings

Device provides a level signal output for connecting to DI devices (e.g., Routers or Indoor People Counting Sensors).

Connect to Terminal:

- DO: Signal Output.
  - When an object obstruction is detected: The infrared-triggered indicator activates, and the device outputs a **low-level** signal.
  - When no object obstruction is detected: The infrared-triggered indicator remains off, and the device outputs a **high-level** signal.
- GND: Ground (Shared with Power Supply GND)
  - Output Current: ≤ 1mA @ 5VDC

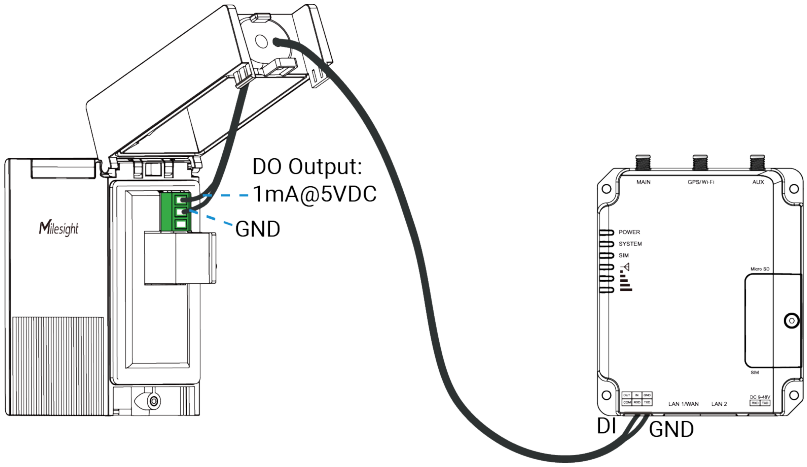

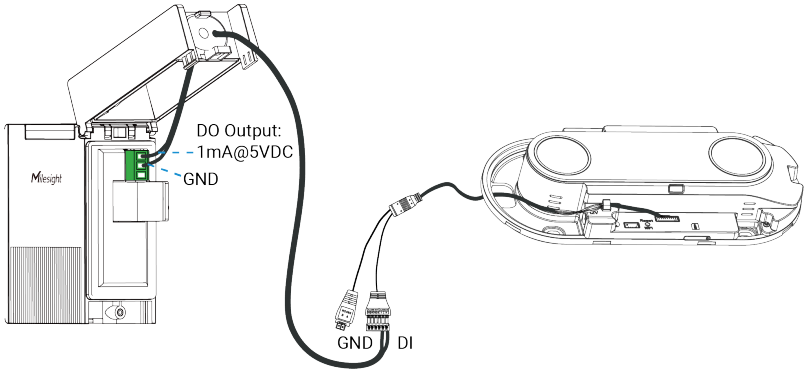

Chapter 5. Install the Device

This section describes how to install the device.

Environmental Requirements:

- Avoid direct sunlight and infrared sources (e.g., remote controls).
- Ensure the detection path is clear and unobstructed.
- When installing outdoors, verify that the waterproof grommet is properly fitted and all screws are tightened to ensure IP65 protection level.
- When installing device on a surface using adhesive, ensure that:
    1. Install the device on a dry, smooth, sturdy, grease-free surface (e.g., glass or metal).
    2. Do not install the device on rough, damp, crumbling, greasy, or wallpapered surfaces.
    3. Before installation, wipe the surface with a clean cloth to ensure it is free of dust and grease.
    4. After adhering the device to the surface, press firmly to ensure it is fully adhered. Allow 24 hours for the best adhesion results.
- When installing device to the wall with screws, ensure that:
    1. Wall materials must have sufficient strength and stability to ensure that screws are securely fastened and the overall structure is sturdy.
    2. Screws should be fastened in locations that avoid electrical wiring, water pipes, and other elements within the wall to prevent damage to the wall structure or safety hazards.

Location Requirements:

- Recommended Installation Height: 0.7-1.2 m.
- Adjustable Detection Distance (Unobstructed): 1-9 m.

Limitations: Uncontrollable Factors Affecting Accuracy

1. May Cause Undercounting:
    a. Two people passing side-by-side or facing each other
    b. Passing closely behind or in front (distance less than 20cm)
    c. Passing at high speed (speed > 1.5m/s)
2. May Cause Overcounting:
    a. Carrying large objects in front of the body (e.g., boxes, bags)
    b. Pushing a shopping cart, stroller, etc.

Indoor Installation

This section describes how to install the device in an indoor environment.

Preparation:

- Mounting Kits
- Installation Bracket
- Screwdriver

Steps:

1. Connect Required Cables.

   You can choose one method to power on the device.

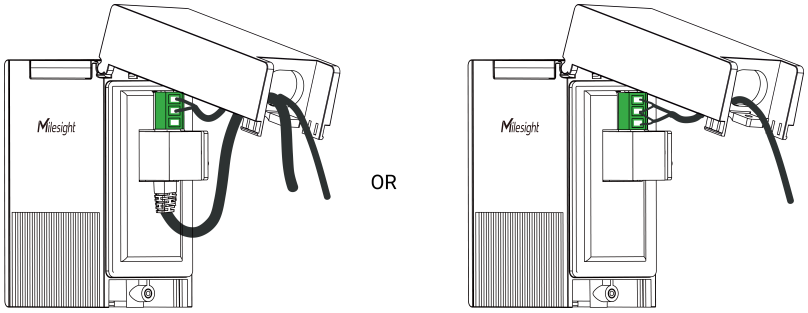

2. Fix Installation Bracket:
   a. Remove the small screws from the installation bracket kits.
   b. Align the installation bracket's holes with the screw holes on the bottom of the device.
   c. Tighten securely as shown in the figure.

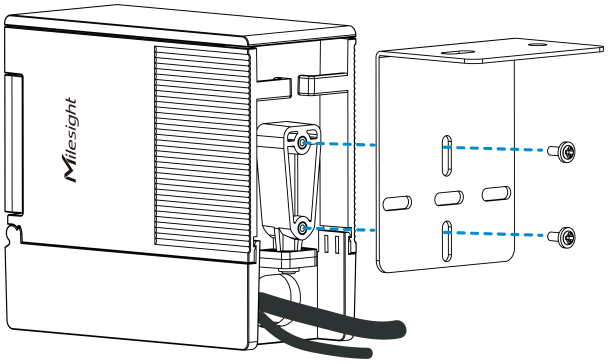

   Installation bracket can be rotated 90° clockwise or counterclockwise as needed for the installation environment.

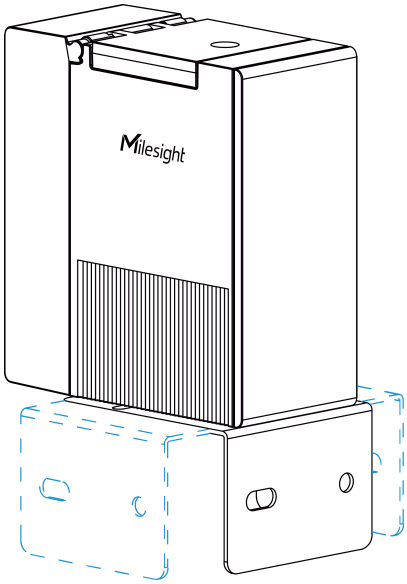

3. Choose Mounting Method.

If	To Do
Adhesive Mounting	a. Peel off the protective film from the installation bracket. b. Attach the bracket to a smooth, non-porous surface such as glass or metal. c. (Optional) When the lens needs to be in contact with a glass surface, ensure that it is pressed firmly against the glass surface to minimize refraction effects. d. Press firmly for 30 seconds to ensure secure adhesion. 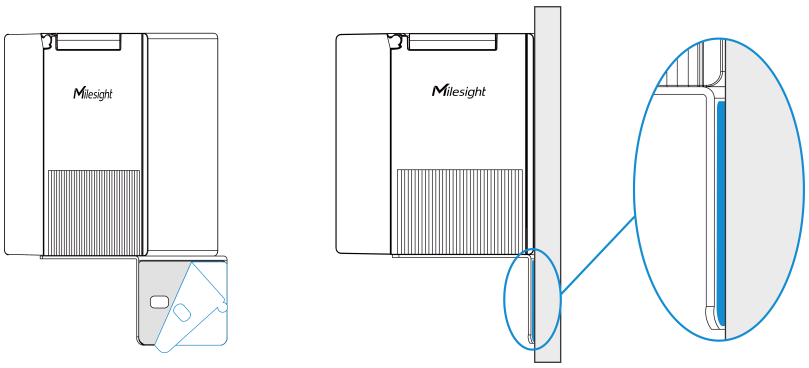
Screw Mounting	a. Mark two screw hole positions on the wall. b. Drill holes and insert wall plugs. c. Secure the bracket to the wall using screws.

If	To Do
	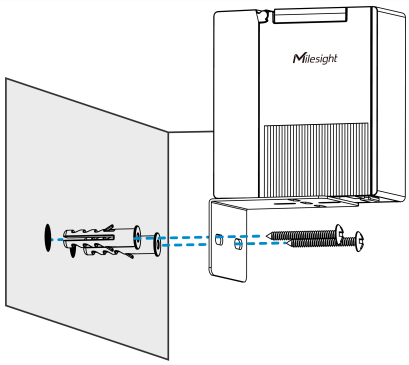

4. Select a Reflector.

   Ensure the maximum detection distance you wish to set, then select or place a target object at the desired location. This target object must be positioned directly in front of the infrared lens to serve as a reflector. The reflector is used to reflect infrared signals for distance calibration.

   - If fixed obstacles are present (e.g., walls, bus shelters, railings or other non-transparent objects), use them directly as reflectors.
   - If no fixed obstacles are present, have an assistant hold an A4 sheet of paper at the edge of the monitoring area as a reflector.

5. Calibrate Detection Distance (Adjustable Unobstructed Range: 1 - 9 m).

   a. Point the device's infrared lens toward the reflector, ensuring no obstructions between the lens and the reflector.
   b. Use a screwdriver to turn the **distance adjustment knob** counterclockwise to its maximum position, and ensure the indicator light remains solid red.
   c. Slowly turn the knob clockwise to reduce detection distance.
   d. Continue adjusting the knob until the indicator light just turn off, indicating that the current position is the desired detection distance.

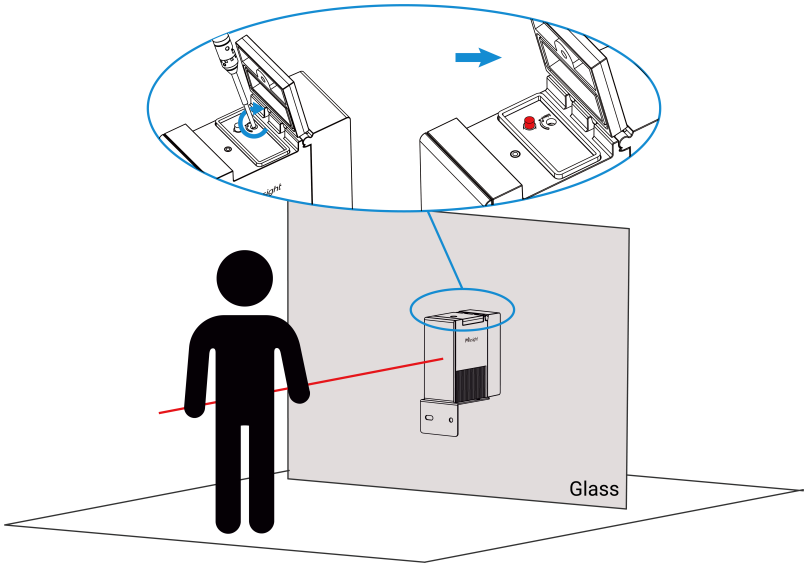

Note:
Detection distance is affected by lighting and glass refraction; refer to actual calibration results.

Outdoor Installation

This section describes how to install the device by Adhesive.

Preparation:

- Installation Bracket
- Mounting Kits
- Waterproof Grommet and Plug Set
- Screwdriver

1. Connect Required Cables.

   You can choose one method to power on the device.

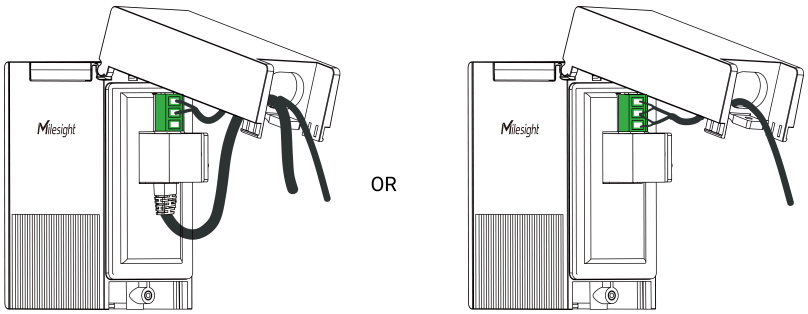

2. Use Waterproof Grommet and Plug Set to ensure waterproof performance:

   a. Insert the terminal wire into the smaller port of the waterproof grommet through the opening on its side, then:
      - If an Ethernet cable is used, insert it into the larger port through the opening on waterproof grommet's side.
      - If no Ethernet cable is required, use the waterproof plug to seal the larger port.

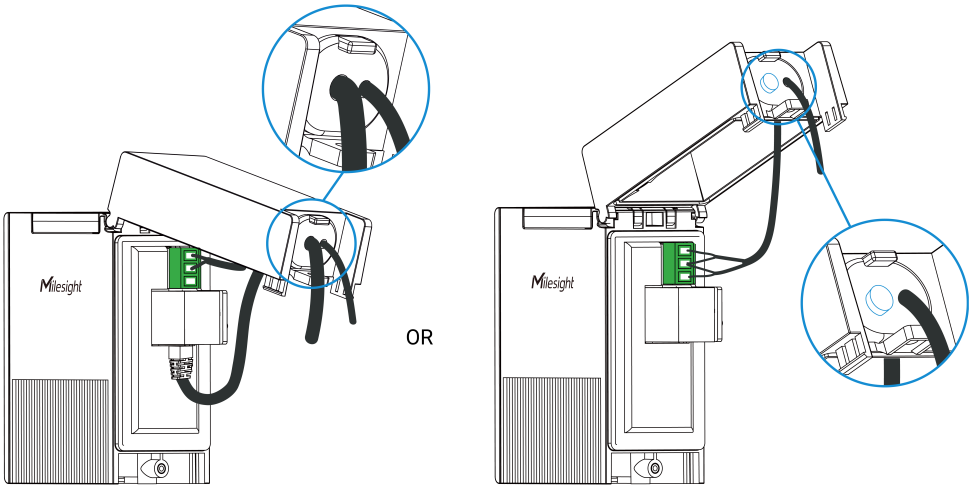

   b. Insert the waterproof grommet with cables into the position shown in the figure, and adjust it to ensure it is fully inserted and sealed.

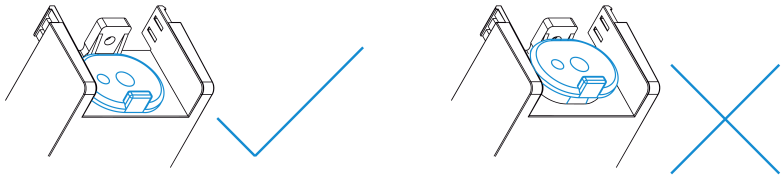

3. Fix Installation Bracket:
   a. Remove the small screws from the installation bracket kits.
   b. Align the installation bracket's holes with the screw holes on the bottom of the device.

c. Tighten securely as shown in the figure.

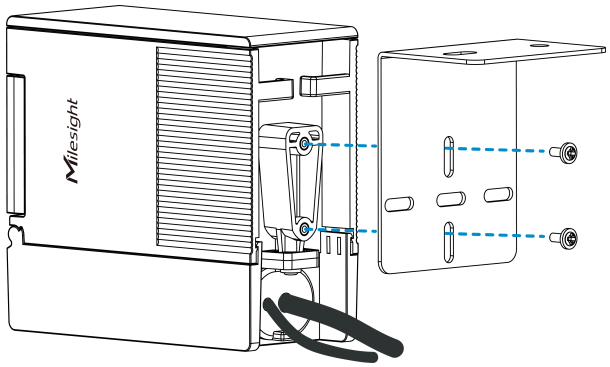

Installation bracket can be rotated 90° clockwise or counterclockwise as needed for the installation environment.

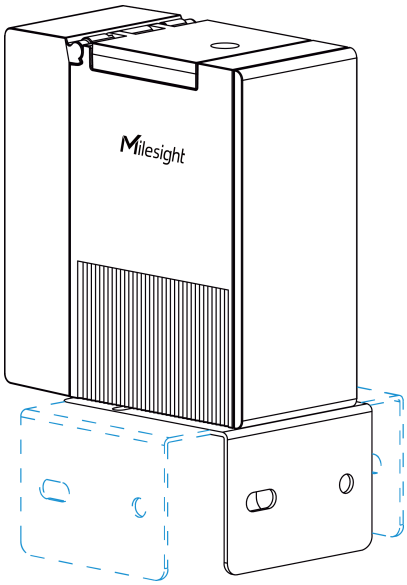

4. Choose Mounting Method.

If	To Do
Adhesive Mounting	a. Peel off the protective film from the installation bracket. b. Attach the bracket to a smooth, non-porous surface such as glass or metal. c. (Optional) When the lens needs to be in contact with a glass surface, ensure that it is pressed firmly against the glass surface to minimize refraction effects. d. Press firmly for 30 seconds to ensure secure adhesion.

If	To Do
	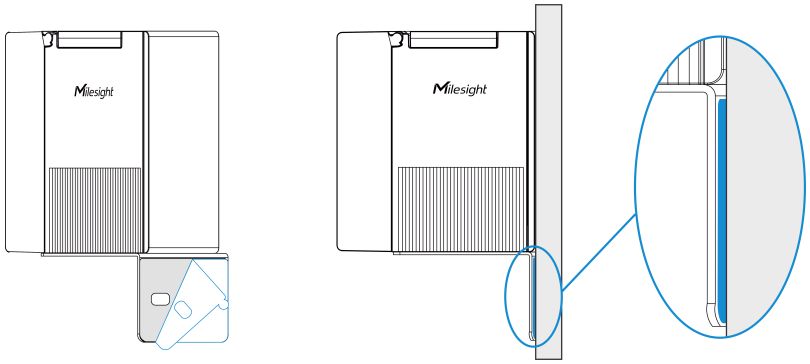
Screw Mounting	a. Mark two screw hole positions on the wall. b. Drill holes and insert wall plugs. c. Secure the bracket to the wall using screws. 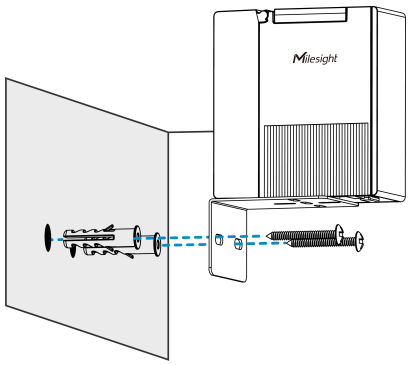

5. Select a Reflector.

   Ensure the maximum detection distance you wish to set, then select or place a target object at the desired location. This target object must be positioned directly in front of the infrared lens to serve as a reflector. The reflector is used to reflect infrared signals for distance calibration.
   - If fixed obstacles are present (e.g., walls, bus shelters, railings or other non-transparent objects), use them directly as reflectors.
   - If no fixed obstacles are present, have an assistant hold an A4 sheet of paper at the edge of the monitoring area as a reflector.
6. Calibrate Detection Distance (Adjustable Unobstructed Range: 1 - 9 m).
   a. Point the device's infrared lens toward the reflector, ensuring no obstructions between the lens and the reflector.
   b. Use a screwdriver to turn the **distance adjustment knob** counterclockwise to its maximum position, and ensure the indicator light remains solid red.

c. Slowly turn the knob clockwise to reduce detection distance.

d. Continue adjusting the knob until the indicator light just turn off, indicating that the current position is the desired detection distance.

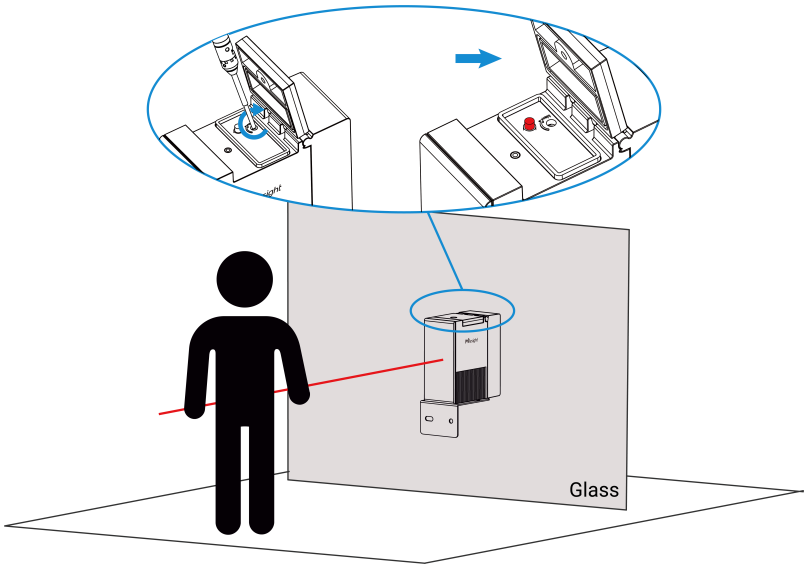

Note:

Detection distance is affected by lighting and glass refraction; refer to actual calibration results.

7. Tighten the top and bottom screws of the device with a screwdriver.

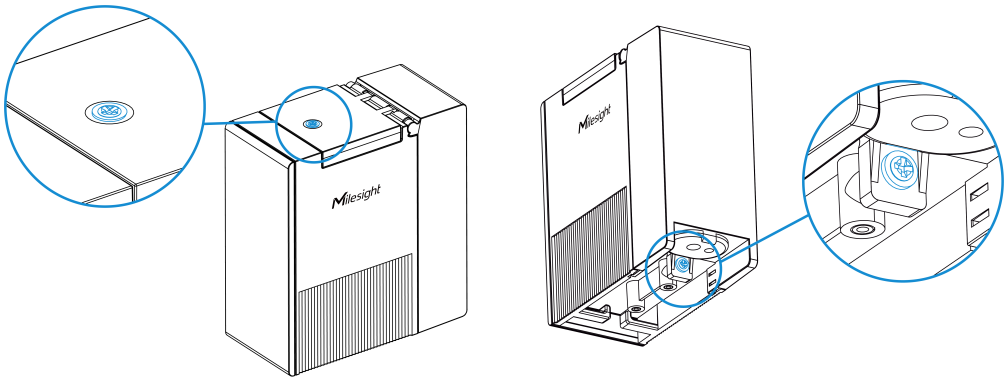

Chapter 6. Services

Milesight provides customers with timely and comprehensive technical support services. End-users can contact your local dealer to obtain technical support. Distributors and resellers can contact directly with Milesight for technical support.

Technical Support Mailbox: iot.support@milesight.com

Online Support Portal: https://support.milesight-iot.com

Resource Download Center: https://www.milesight.com/iot/resources/download-center/

MILESIGHT CHINA

TEL: +86-592-5085280

FAX: +86-592-5023065

Add: Building C09, Software Park Phase III, Xiamen 361024, Fujian, China