Industrial Router Pro Series

UR35

Quick Start Guide

Safety Precautions

Milesight will not shoulder responsibility for any loss or damage resulting from not following the instructions of this operating guide.

- The device must not be modified in any way.
- Do not place the device close to objects with naked flames.
- Do not place the device where the temperature is below/above the operating range.
- Do not power on the device or connect it to other electrical device when installing.
- Check lightning and water protection when used outdoors.
- Do not connect or power the equipment using cables that have been damaged.

Related Documents

This Start Guide only explains the installation of Milesight UR35 router. For more functionality and advanced settings, please refer to the relevant documents as below.

Document	Description
UR35 Datasheet	Datasheet for UR35 industrial cellular router.
UR35 User Guide	Users could refer to the guide for instruction on how to log in the web GUI, and how to configure all the settings.

The related documents are available on Milesight website: https://www.milesight-iot.com

Declaration of Conformity

UR35 are in conformity with the essential requirements and other relevant provisions of the CE, FCC, and RoHS.

© 2011-2022 Xiamen Milesight IoT Co., Ltd.

All rights reserved.

All information in this guide is protected by copyright law. Whereby, no organization or individual shall copy or reproduce the whole or part of this user guide by any means without written authorization from Xiamen Milesight IoT Co., Ltd.

For assistance, please contact
Milesight technical support:
Email: iot.support@milesight.com
Support Portal: support.milesight-iot.com
Tel: 86-592-5085280
Fax: 86-592-5023065
Address: Building C09, Software Park III, Xiamen 361024, China

Revision History

Date	Doc Version	Description
Aug. 1, 2019	V 1.0	Initial version
Feb. 11, 2020	V 1.1	1. Replace serial port picture; 2. Delete reboot descriptions of reset button
Aug. 26, 2020	V 1.2	1. Web GUI change; 2. 2.Add -485 model
Nov. 20, 2020	V 2.0	Layout replace
Dec. 1, 2021	V 2.1	Update cellular pictures
June 8, 2022	V 2.2	1. Wall mounting bracket customizable 2. Web GUI logo update
Oct. 31, 2022	V 2.3	Delete Ethernet cable

Contents

1. Packing List 5
2. Hardware Introduction 6
2.1 Overview 6
2.2 Dimensions 6
2.3 Serial & IO & Power Pinouts 7
2.4 LED Indicators 7
2.5 Reset Button 8
2.6 Ethernet Port Indicator 8
3. Hardware Installation 9
3.1 SIM Card/Micro SD Card Installation 9
3.2 Antenna Installation 9
3.3 Router Installation 9
3.3.1 DIN Rail Mounting 10
3.3.2 Wall Mounting 10
3.4 Protective Grounding Installation 10
4. Log in the Web GUI of Router 11
5. Network Configuration 13
5.1 Ethernet WAN Configuration 13
5.2 Cellular Connection Configuration 13

1. Packing List

Before you begin to install the UR35 router, please check the package contents to verify that you have received the items below.

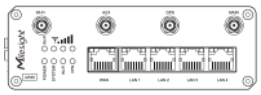

1 × UR35

1 × Power Adapter

1 × 8-Pin Pluggable Terminal

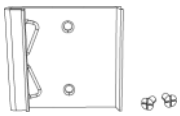

1 × DIN Rail Kit

2 × Magnetic Cellular Antennas

1 × Quick Start Guide

1 × Warranty Card

1 × Wi-Fi Antenna
(Wi-Fi Version Only)

1 × GPS Antenna
(GPS Version Only)

2 × Stubby Cellular Antennas
(Optional)

If any of the above items is missing or damaged, please contact your sales representative.

2. Hardware Introduction

2.1 Overview

A. Front Panel

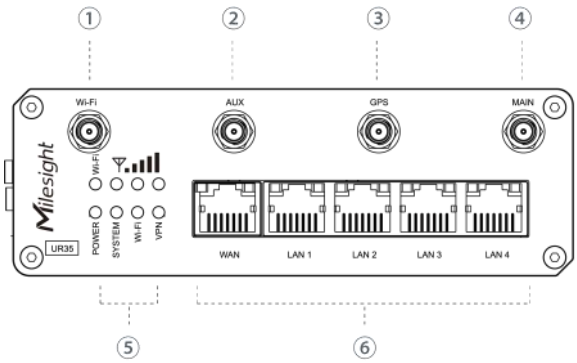

① Wi-Fi Antenna Connector
② AUX Antenna Cellular Connector
③ GPS Antenna Connector
④ MAIN Cellular Antenna Connector
⑤ LED Indicator Area
POWER: Power Indicator
SYSTEM: Status Indicator
Wi-Fi: Wi-Fi Indicator
VPN: VPN Indicator
SIM : SIM Status Indicator
: Signal Strength Indicator
⑥ Ethernet Port & Indicator

B. Left Side Panel

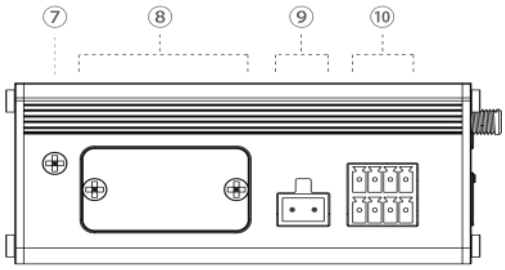

⑦ Grounding Stud
⑧ SIM and Reset Button Holder
⑨ Power Connector
⑩ Serial Port & I/O

2.2 Dimensions (mm)

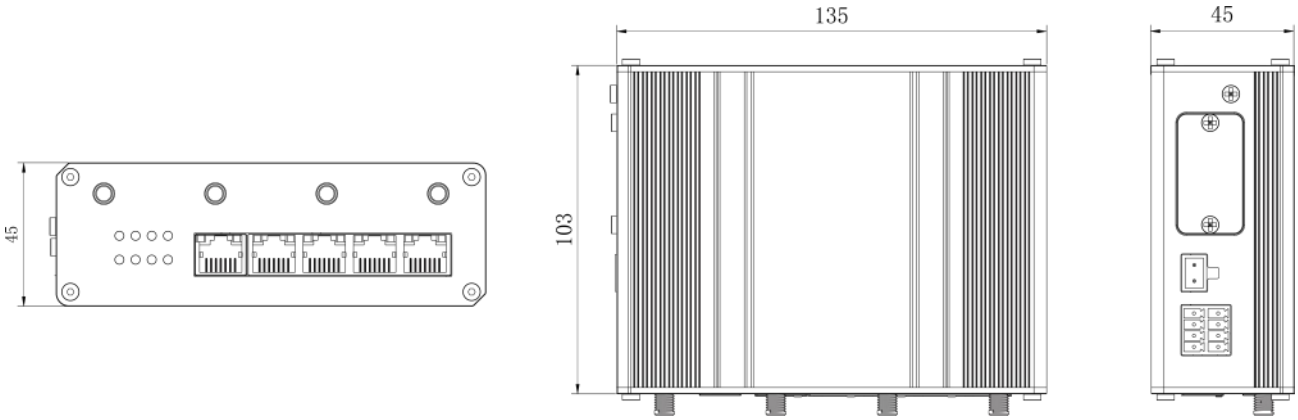

2.3 Serial & IO & Power Pinouts

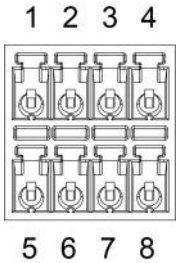

PIN	RS232	RS485	DI	DO	Description
1	---	---	IN	---	Digital Input
2	GND	---	GND	---	Ground
3	---	B	---	---	Data -
4	TXD	---	---	---	Transmit Data
5	---	---	---	COM	Common Ground
6	---	---	---	OUT	Digital Output
7	---	A	---	---	Data +
8	RXD	---	---	---	Receive Data

Note: For -RS485 model, RXD--->A, TXD--->B.

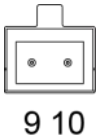

PIN	Description	Wire Color
9	Positive	Red
10	Negative	Black

2.4 LED Indicators

LED	Indication	Status	Description
POWER	Power Status	Off	The power is switched off
		On	The power is switched on
SYSTEM	System Status	Green Light	Static: Start-up
			Blinking slowly: the system is running properly
		Red Light	The system goes wrong
VPN	VPN Status	Off	VPN is disconnected
		Green Light	VPN is connected
Wi-Fi	Wi-Fi Status	Off	Wi-Fi is disabled
		Green Light	Static: Wi-Fi is enabled
			Blinking slowly: sending or receiving data via Wi-Fi
SIM	SIM Card Status	Off	SIM1 or SIM2 is registering or fails to register (or there are no SIM cards inserted)
		Green Light	Blinking slowly: SIM1 (as primary SIM) has been registered and is ready for dial-up
			Blinking rapidly: SIM1(as primary SIM) has been registered and is dialing up now
			Static: SIM1 (as primary SIM) has been registered and dialed up successfully
		Orange Light	Blinking slowly: SIM2 (as primary SIM) has been registered and is ready for dial-up
			Blinking rapidly: SIM2 (as primary SIM) has been

			registered and is dialing up now
			Static: SIM2 (as primary SIM) has been registered and dialed up successfully
Signal Strength	Signal 1/2/3	Off	No signal
		Green Light	Static/Off/Off: weak signals with 1-10 ASU (please check if the antenna is installed correctly, or move the antenna to a suitable location to get better signal)
			Static/Static/Off: normal signals with 11-20 ASU (average signal strength)
			Static/Static/Static: strong signals with 21-31 ASU (signal is good)

2.5 Reset Button

Reset button is under the SIM slots.

Function	Description	
	SYSTEM LED	Action
Reset	Blinking	Press and hold the reset button for more than 5 seconds.
	Static Green → Rapidly Blinking	Release the button and wait.
	Off → Blinking	The router is now reset to factory defaults.

2.6 Ethernet Port Indicator

Indicator	Status	Description
Link Indicator (Orange)	On	Connected
	Blinking	Transmitting data
	Off	Disconnected

3. Hardware Installation

Environmental Requirements

- Power Input: 9-48 VDC (48 VDC is needed for PoE output)
- Power Consumption: Typical 3.9 W (Max 4.6 W)
- Operating Temperature: -40°C to 70°C (-40°F -158°F)
- Relative Humidity: 0% to 95% (non-condensing) at 25°C/77°F

3.1 SIM Card/Micro SD Card Installation

UR35 do not support hot-plug. Please cut off the power before insert or take off cards.

A. Unscrew the cover of the SIM card then take it off.

B. Put SIM card/Micro SD into the slot and screw it up.

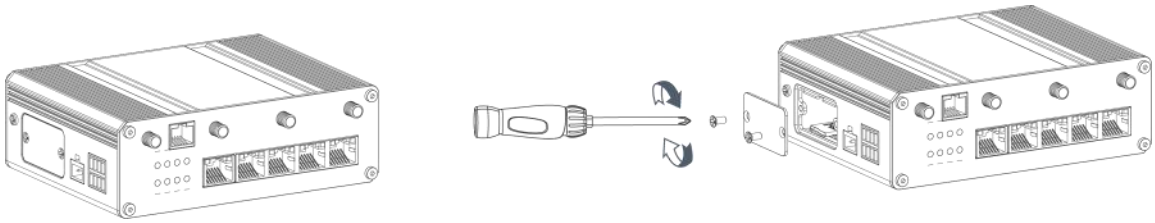

3.2 Antenna Installation

Rotate the antenna into the antenna connector accordingly. The external antenna should be installed vertically always on a site with a good signal.

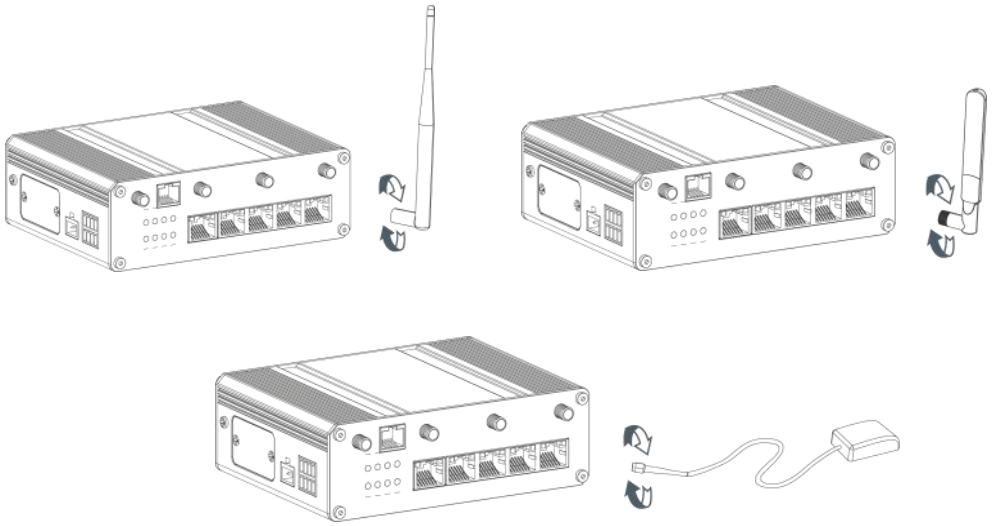

3.3 Router Installation

The router can be placed on a desktop or mounted to a wall or a DIN rail.

3.3.1 DIN Rail Mounting (Measured in mm)

Use 2 pcs of M3 × 6 flat head Phillips screws to fix the mount clip to the router, and then hang the device to the DIN rail. The width of DIN rail is 3.5 cm.

Recommended torque for mounting is 1.0 N·m, and the maximum allowed is 1.2 N·m.

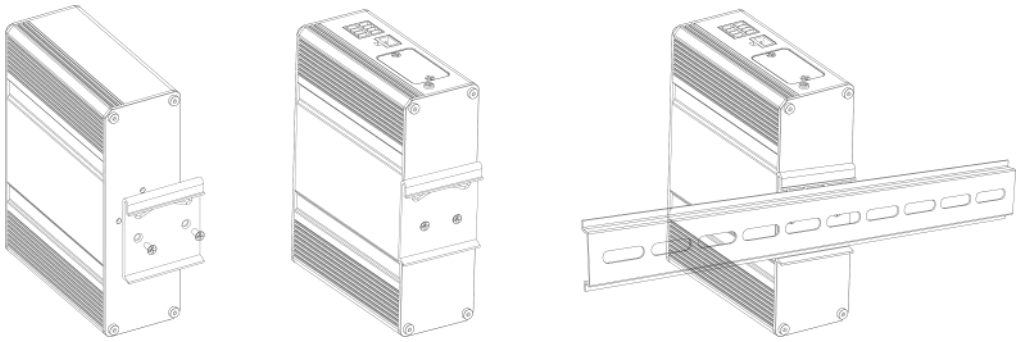

3.3.2 Wall Mounting (Measured in mm)

Use 2 pcs of M3 × 6 flat head Phillips screws to fix the wall mounting bracket to the router, and then use 2 pcs of M3 drywall screws to mount the router associated with the wall plugs on the wall.

Recommended torque for mounting is 1.0 N·m, and the maximum allowed is 1.2 N·m.

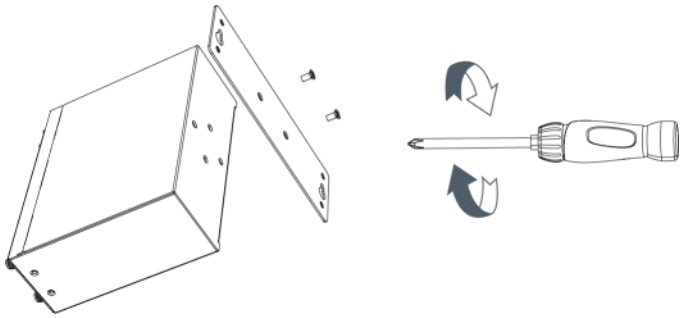

3.4 Protective Grounding Installation

Remove the grounding nut, then connect the grounding ring of the cabinet's grounding wire onto the grounding stud and screw up the grounding nut.

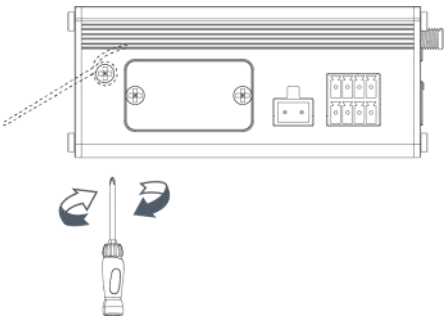

The router must be grounded when deployed. According to operating environment, the ground wire should be connected with grounding stud of router.

4. Log in the Web GUI of Router

Please connect PC to LAN port of UR35 router. PC can obtain an IP address, or you can configure a static IP address manually. The following steps are based on Windows 10 operating system for your reference.

IP Address: **192.168.1.1**

Username: **admin**

Password: **password**

A. Go to “Control Panel” → “Network and Internet” → “Network and Sharing Center”, then click “Ethernet” (May have different names).

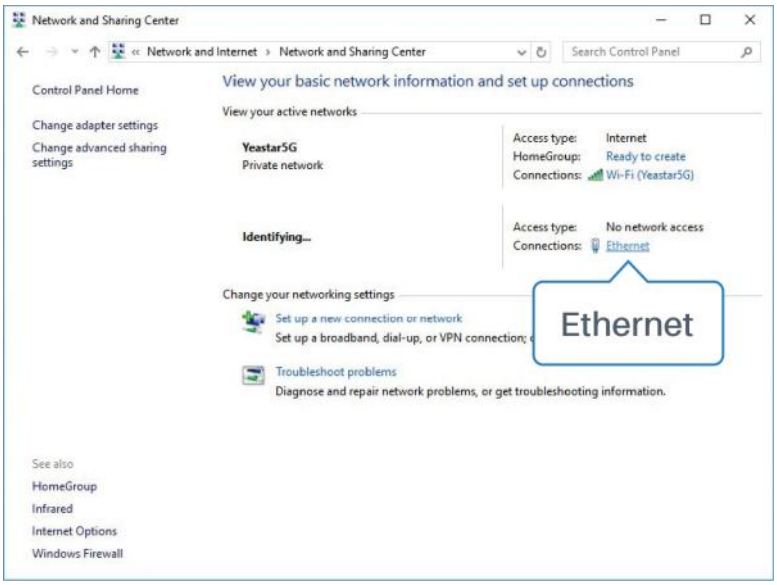

B. Go to “Properties” → “Internet Protocol Version 4(TCP/IPv4) ”, select “Obtain an IP address automatically” or “Use the following IP address”, then assign a static IP manually within the same subnet of the device.

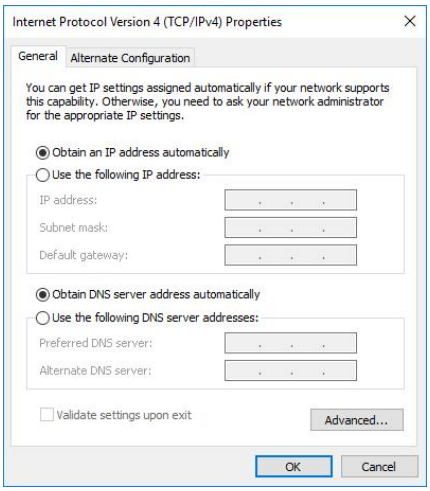

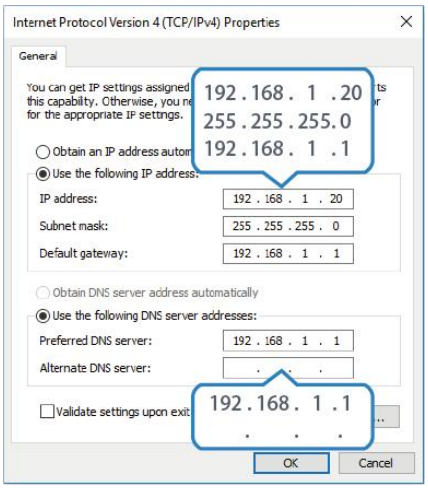

C. Open a Web browser on your PC (Chrome is recommended), type in the IP address 192.168.1.1, and press Enter on your keyboard.

D. Enter the username, password, and click "Login".

If you enter the username or password incorrectly more than 5 times, the login page will be locked for 10 minutes.

E. When you login with the default username and password, you will be asked to modify the password. It's suggested that you change the password for the sake of security. Click "Cancel" button if you want to modify it later.

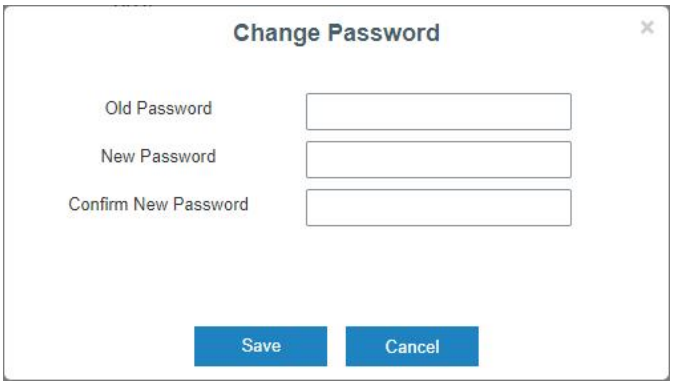

F. After you login the Web GUI, you can view system information and perform configuration on the router.

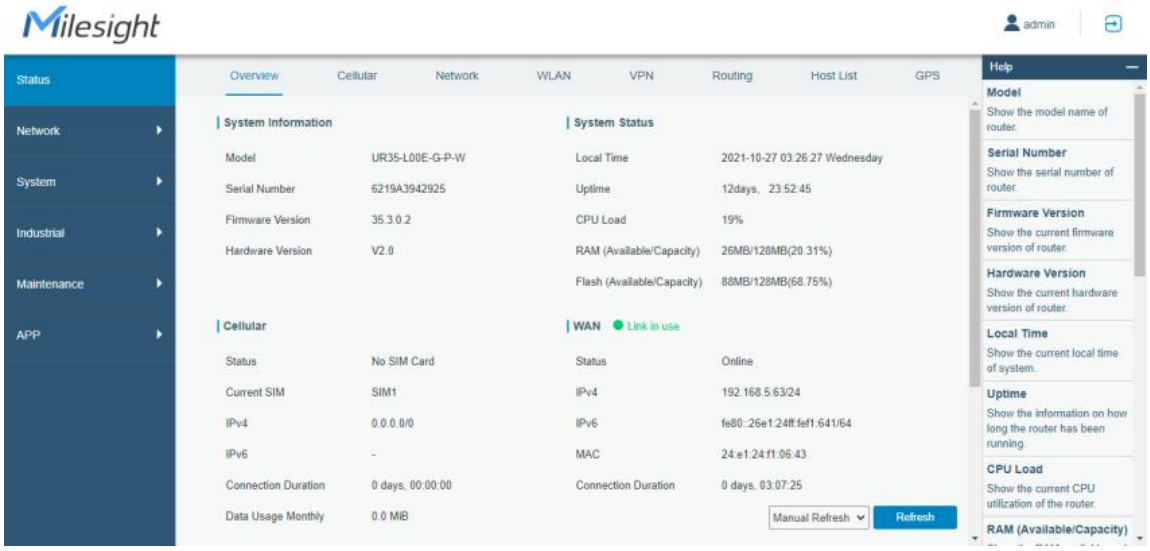

5. Network Configuration

This chapter explains how to connect UR35 to network via WAN connection or cellular.

5.1 Ethernet WAN Configuration

A. Go to “Network” → “Interface” → “WAN” to select connection type and configure WAN parameters, click “Save & Apply” button to make the changes take effect.

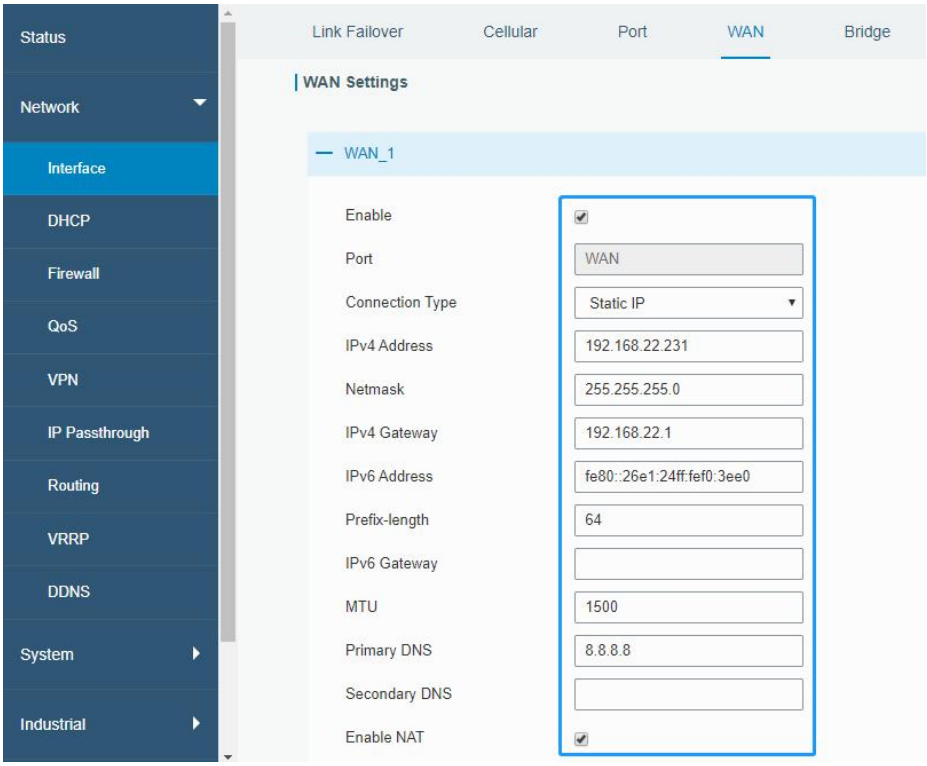

B. Connect WAN port to another network devices like modem.

C. Go to “Network” → “Interface” → “Link Failover” to rise the WAN priority to 1.

D. Open your preferred browser on PC, then type any available web address into address bar and see if it is able to visit Internet via UR35 router.

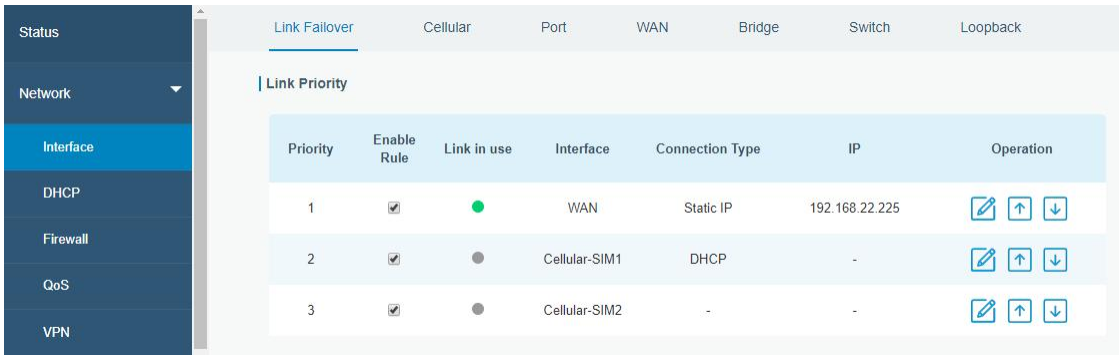

5.2 Cellular Connection Configuration

Take inserting SIM card into SIM1 slot as an example; please refer to the following detailed operations.

A. Go to “Network” → “Interface” → “Cellular” → “Cellular Setting” to configure APN, PIN code or other

cellular info, click “Save” and “Apply” to save the configuration.

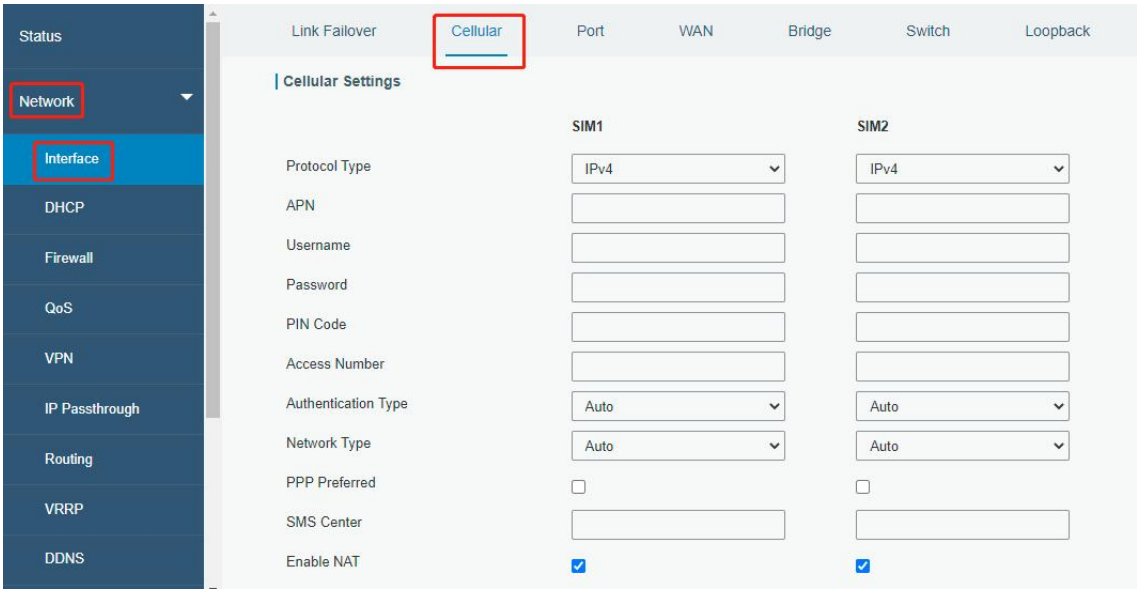

B. Go to “Network” → “Interface” → “Link Failover” to enable SIM1 and rise link priority of SIM1.

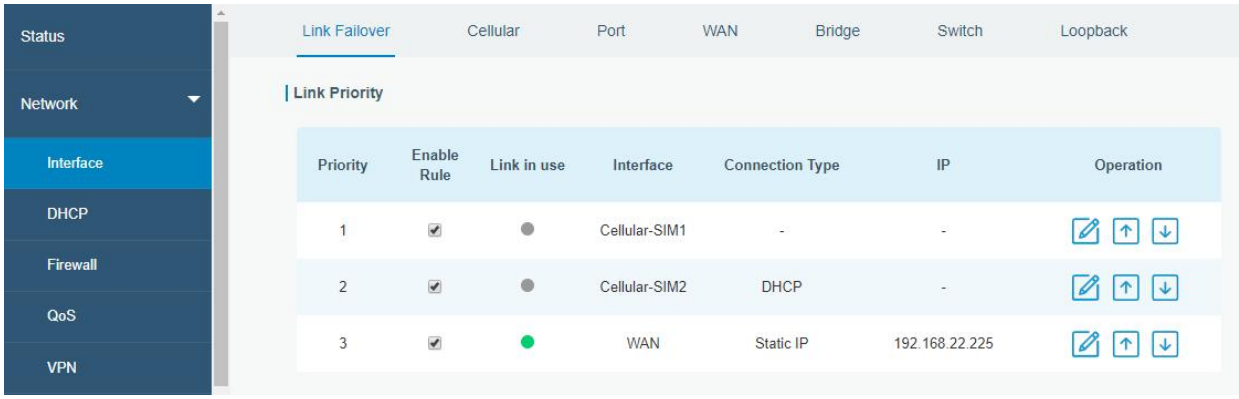

C. Click to configure ICMP ping detection information.

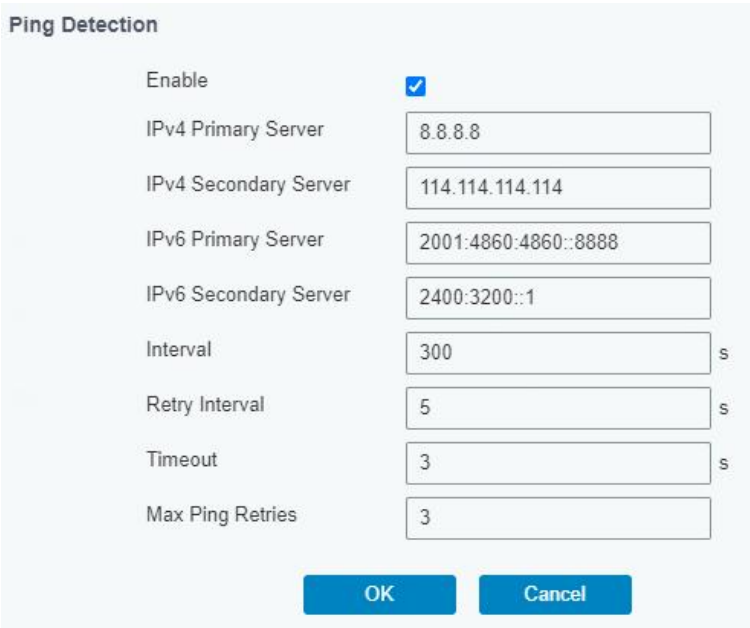

D. Click “Status” → “Cellular” to view the status of the cellular connection. If it shows “Connected”, it means SIM1 has dialed up successfully. On the other hand, you can check the status of SIM indicator. If it keeps on green light statically, it means SIM1 has dialed up successfully.

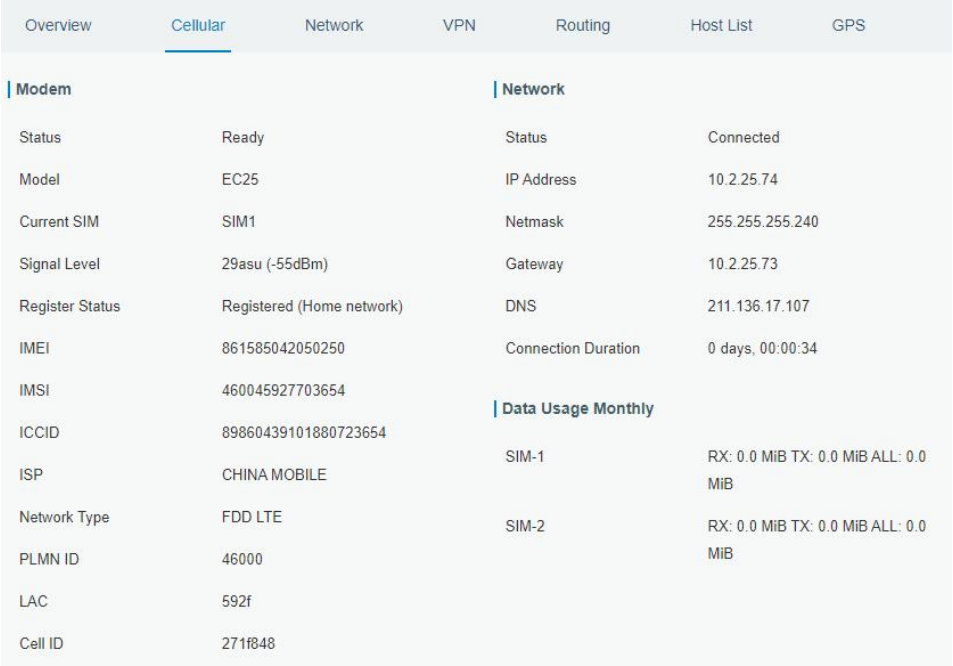

E. Open your preferred browser on PC, then type any available web address into address bar and see if it is able to visit Internet via UR35 router.

[END]