RG2i
Spécialiste IoT & M2M

# Z-KEY / R-KEY-LT

## 1 / 2-PORT MODBUS RTU INDUSTRIAL GATEWAY / SERIAL DEVICE SERVER

- ModBUS / Ethernet ↔ Serial Gateway
- ModBUS / Serial ↔ Ethernet Gateway
- ModBUS Gateway with tags
- Serial Device Server

100% Made & Designed in Italy

SENECA
www.seneca.it

RG2i
Spécialiste IoT & M2M
14 rue Edouard Petit
42000 St-Etienne
Tel : +33 477 92 03 56
Email : contact@rg2i.com
www.rg2i.com

# 1 / 2-PORT MODBUS RTU INDUSTRIAL GATEWAY / SERIAL DEVICE SERVER

Z-KEY and R-KEY-LT are devices that can extend networks and enable the passing of data process between different layers of the communication IT and OT. They ensure the transmission of signals between ModBUS TCP-IP / ModBUS RTU/ASCII in different modes, effectively increasing the number of nodes that can be connected and the distances that can be reached in the network. The devices can extend the serial network as well by operating as Serial Servers transparent to the serial communication protocol. Equipped of 1 Fast Ethernet 10/100 Tx port and 1 or 2 serial ports (RS232/RS485, RS485), Z-KEY and R-KEY-LT offers multiple configuration options thanks to EASY SET-UP 2 (PC software), web server and software tools such as SDD (Seneca Discovery Device), SESC (Seneca Ethernet to Serial Connection). Advanced features include advanced serial diagnostics and “quarantine” mode with settable time for failing devices.

## HIGHLIGHTS

**MULTIFUNCTION GATEWAYS**

**BUILT-IN WEBSERVER**

**MAXIMUM FLEXIBILITY OF CONFIGURATION**

**EXCEL TEMPLATE FOR ASSIGNMENT AND EXPORT TAGS**

**SUPPORT UP TO 8 SIMULTANEOUS MODBUS TCP-IP CLIENTS**

**SUPPORT UP TO 128 MODBUS RTU SLAVE NODES AND 10 MODBUS TCP-IP SERVERS**

**AUTOMATIC SCANNING FOR SEARCHING CONNECTED IP ADDRESSES**

**FIRMWARE UPDATE VIA WEB SERVER**

**QUARANTINE MODE WITH TIME SET UP**

**TRANSPARENT TO SERIAL COMMUNICATION PROTOCOL**

**WIDE OPERATING TEMPERATURE**

**UL APPROVAL**

# APPLICATION EXAMPLES

## MODBUS GATEWAY
**MODBUS TCP-IP → MODBUS RTU**

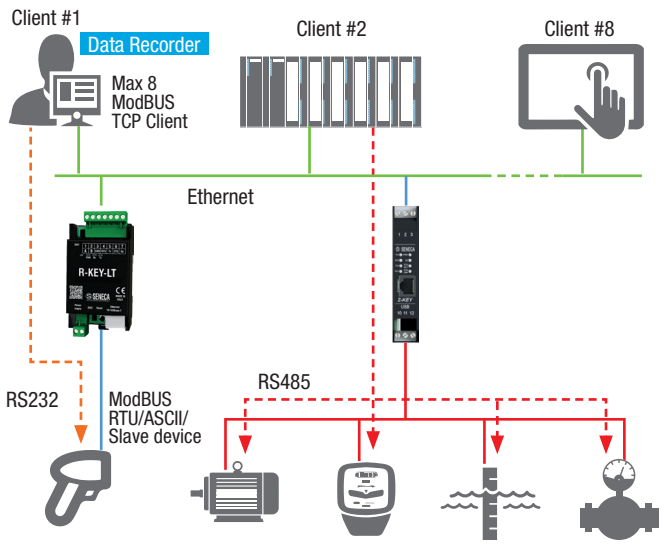


## MODBUS GATEWAY
**MODBUS TCP-IP → MODBUS RTU**

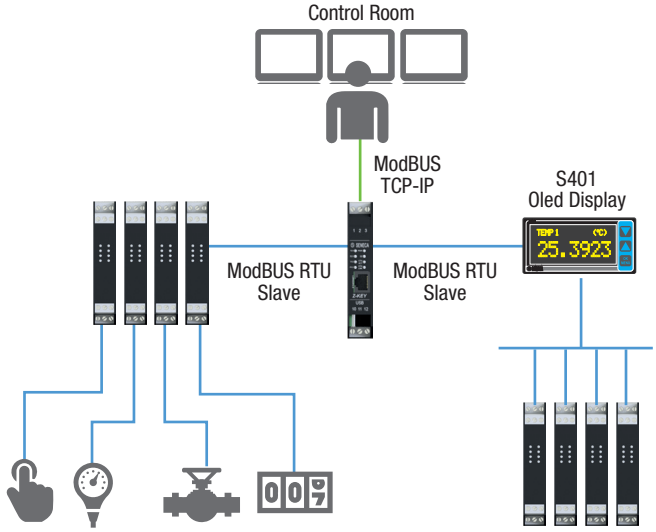


## MODBUS GATEWAY WITH TAGS
**MODBUS TCP-IP → MODBUS RTU MASTER/SLAVE**

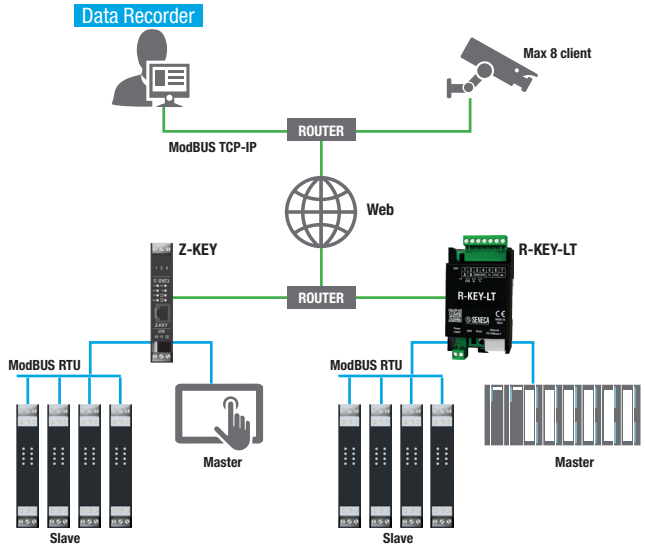


## MODBUS GATEWAY WITH TAGS
**MODBUS TCP-IP CLIENT → ModBUS RTU Slave / ModBU TCP-IP Server**

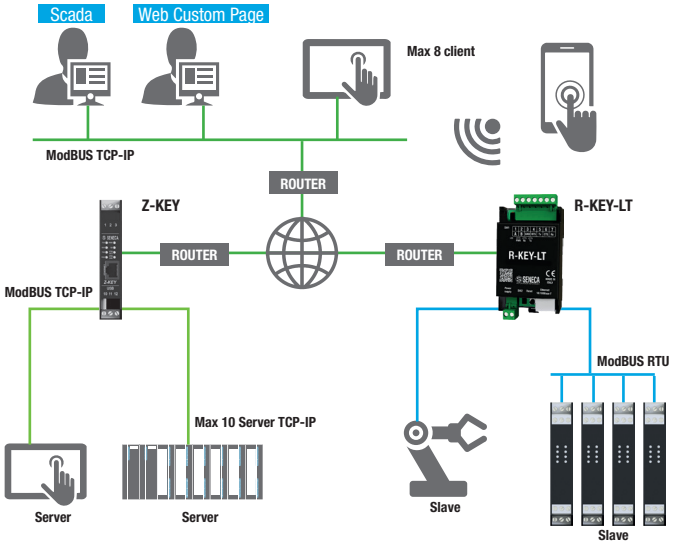


## SERIAL DEVICE SERVER

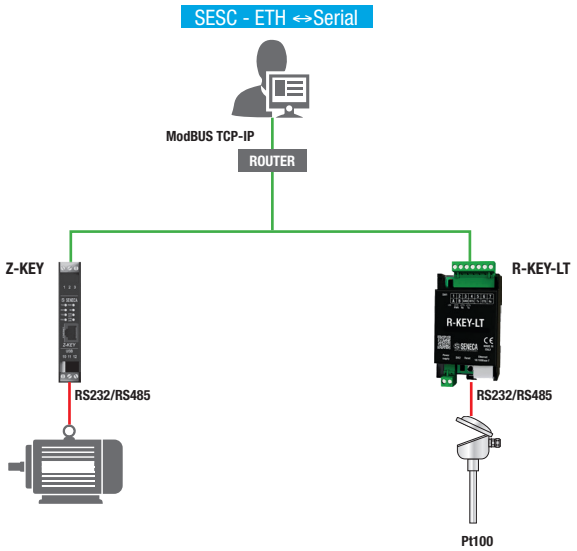


## SERIAL DEVICE SERVER

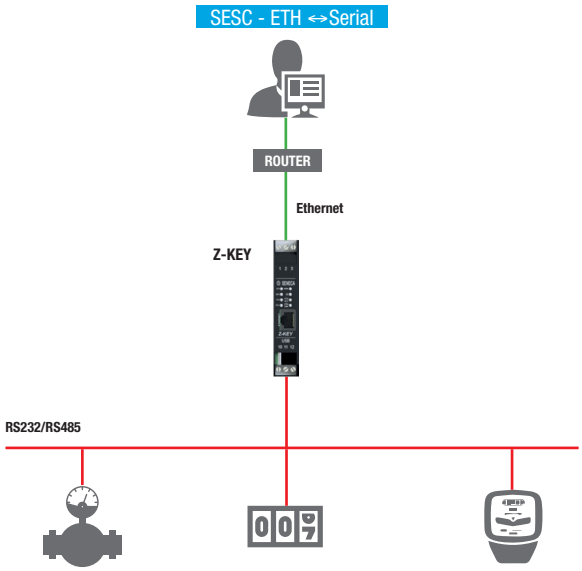

# Z-KEY / R-KEY-LT

| | R-KEY-LT | Z-KEY |
|---|---|---|
| | | |
| | 1-Port ModBUS RTU/ASCII Industrial Gateway / Serial Device Server | 2-Port ModBUS RTU/ASCII Industrial Gateway / Serial Device Server |
| **GENERAL DATA** | | |
| **Power Supply** | 10..40 Vdc; 19..28 Vac | 10..40 Vdc; 19..28 Vac |
| **Power Consumption** | Max 1 W | 2 W @ 24 Vac (typical) |
| **LED - Status indicators** | Power Supply<br>Rx/Tx RS232/R485<br>Ethernet ACT/LNK | Power Supply<br>Rx/Tx RS232/R485 (port 1)<br>Rx/Tx RS232/R485 (port 2)<br>Ethernet ACT/LNK |
| **Isolation** | 1,5 kVac a 2 vie (Power//Eth) | 1,5 kVac a 3 vie (Power//Eth.//Ser) |
| **Protection degree** | IP20 | IP20 |
| **Operating temperature** | -20..+70°C | -20..+70°C |
| **Connections** | 7-way removable screw terminal, 5 mm pitch<br>2-way removable screw terminal, 5 mm pitch<br>Connector on the bottom side RJ45 for Ethernet | Removable 3-way screw terminals, 5 mm pitch<br>IDC10 rear connector for DIN rail 46277<br>RJ45 front connector |
| **Dimension (wxhxd)** | 32 x 90 x 53 mm | 17,5 x 112 x 100 mm |
| **Weght** | 80 g | 170 g |
| **Case** | PC/ABS self-extinguishing UL94-V0 gray color RAL 7035 | Nylon PA6 30% glass fiber, self-extinguishing class V0 |
| **Mounting** | For DIN Rail (IEC EN 60715) | For DIN Rail (IEC EN 60715) |
| **Approval** | CE, UL | CE, UL |
| **COMMUNICATION** | | |
| **Ethernet port** | Nr.1 Fast Ethernet 100 Tx, RJ45 frontal port<br>Up to 8 TCP-IP Clients<br>Up to 10 TCP/IP Servers | Nr.1 Fast Ethernet 100 Tx, RJ45 frontal port<br>Up to 8 TCP-IP Clients<br>Up to 10 TCP/IP Servers |
| **Serial ports** | Nr.1 RS232 or RS485 serial port, max. baud rate 115kbps on connector | Nr.1 serial port on terminals, switchable RS232 / RS485, max baud rate 115kbps on connector<br>No. 1 RS485 port on IDC10 connector for bus, baud rate max 115kbps |
| **Communication protocols** | ModBUS TCP-IP<br>ModBUS RTU<br>Modbus ASCII | ModBUS TCP-IP<br>ModBUS RTU<br>Modbus ASCII |
| **Operating modes** | ModBUS / Ethernet ↔ Serial Gateway<br>ModBUS / Serial ↔ Ethernet Gateway<br>Modbus Gateway con tag<br>Serial Device Server | ModBUS / Ethernet ↔ Serial Gateway<br>ModBUS / Serial ↔ Ethernet Gateway<br>Modbus Gateway con tag<br>Serial Device Server |
| **Connectivity** | Max 8 Modbus TCP-IP Clients (Server Mode)<br>Max 500 variables (tags)<br>Max 10 Modbus TCP-IP Servers (Client Mode)<br>128 MobBUS RTU/ASCII Slave Nodes | Max 8 Modbus TCP-IP Clients (Server Mode)<br>Max 500 variables (tags)<br>Max 10 Modbus TCP-IP Servers (Client Mode)<br>128 MobBUS RTU/ASCII slave nodes (per port) |
| **SETTINGS AND ADVANCED FUNCTIONS** | | |
| **Programming** | EASY SETUP 2, Web Server, DIP-switch | EASY SETUP 2, Web Server, DIP-switch |
| **Tools** | SDD (Seneca Discovery Device),<br>SESC (Seneca Ethernet to Serial Connection) | SDD (Seneca Discovery Device),<br>SESC (Seneca Ethernet to Serial Connection) |
| **Traffic Monitor** | Yes | Yes |

## ORDER CODES

| Code | Description |
|---|---|
| **GATEWAYS** | |
| R-KEY-LY | 1-Port ModBUS RTU/ASCII Industrial Gateway / Serial Device Server |
| Z-KEY-0 | 2-Port ModBUS RTU/ASCII Industrial Gateway / Serial Device Server |
| **SOFTWARE TOOLS** | |
| EASY SETUP 2 | SENECA programmable device configurator |
| TEMP-TAG-Z-KEY | Excel template gateway mode tag management |
| **ACCESSORIES** | |
| CS-DB9M-MEF-PH | Serial communication cable (DB9M connector / 4-way female connector) 3 wires mt 1.5 |
| CE-RJ45-RJ45-R | Straight ethernet cable (RJ45 / RJ45) |
| Z-PC-DIN2-17.5 | Support for quick mounting on DIN rail 2 slots pitch 17.5 mm |
| Z-PC-DIN8-17.5 | Support for quick mounting on DIN rail 8 slots pitch 17.5 mm |
| Z-PC-DINAL2-17.5 | Support for quick mounting on DIN rail head + 2 slots pitch 17.5 mm |
| Z-SUPPLY | Single-phase switching power supply 24V @ 1.5 A |

22C0301 - Publication - Z-KEY / R-KEY_2206EN – June 2022