CMi4140

User manual

14 rue Edouard Petit
42000 St-Etienne

Tel : +33 477 92 03 56
Email : contact@rg2i.com

www.rg2i.com

1.5 Edition
Copyright © 2024 Elvaco AB

All rights reserved. No part of the contents of this manual may be transmitted or reproduced in any form by any means without the written permission of Elvaco AB. Printed in Sweden.

All trademarks and copyrights are acknowledged.

The contents of this manual, including product data, diagrams, charts, etc. represent information on products at the time of publication and are subject to change without prior notice. It is therefore recommended to contact Elvaco AB for the latest product information before purchasing the product.

The documentation and product are provided on an “as is” basis only and may contain deficiencies or inadequacies. Elvaco AB takes no responsibility for damages, liabilities, or other losses resulting from the usage of this product or manual.

Table of Contents

1. About this manual **4**
1.1. Symbols 4
1.2. Terms and abbreviations 4
2. Safety **5**
3. Product overview **6**
3.1. Application description 6
3.2. Features 6
3.3. Compatibility 6
3.4. Parts overview 7
4. Installation **8**
4.1. Mounting the product 8
4.2. Connection of the LoRaWAN® antenna 8
4.3. Activating the module 8
4.4. LoRaWAN® network end-device activation 9
4.5. Reading the module status via meter display 9
5. Operation **11**
5.1. Configuration 11
5.2. Transmit interval 12
5.2.1. Transmit interval using EcoMode 12
5.3. Time handling 12
5.4. Adaptive data rate (ADR) 13
5.5. Message encoding 13
5.6. Security and access control 13
5.7. Reset procedures 13
5.7.1. Rebooting the module 13
5.7.2. Switching off the module 14
5.8. Meter communication error messages 14
6. Configuration options **15**
6.1. Elvaco OTC App configuration options 15
6.2. Downlink configuration options 16
6.3. Message formats 17
6.3.1. Unscheduled message formats 17
6.3.2. Scheduled message formats 20
7. Technical specifications **33**
8. Simplified Declaration of Conformity **34**
9. Document history **35**

1. About this manual

This manual covers information needed to mount, install, configure, and use the product. It is intended for installers and system integrators.

To download the latest version of this User manual, visit the Elvaco website, https://www.elvaco.com. There you will also find information about Elvaco's other products and services.

1.1. Symbols

The following symbols are used throughout the manual to emphasize important information and useful tips:

Warning
Indicates a potentially dangerous situation that could result in severe injuries or serious equipment damage.

Caution
Indicates a potentially dangerous situation that could result in minor injuries or equipment damage.

Note
Indicates information that is important to take into consideration for safety reasons or to assure correct operation of the product.

Tip
Indicates information intended to help you get the most out of your product. It can for example be used to highlight a possible customization option related to the current section.

1.2. Terms and abbreviations

Abbreviation	Description
DIB	Data Information Block
DIF	Data Information Field
VIF	Value Information Field
MCM	Meter Connectivity Module

Number representation

- Decimal numbers are represented as normal number, i.e. 10 (ten)
- Hexadecimal numbers are represented with prefix 0x, i.e. 0x0A (ten)
- Binary numbers are represented with the prefix 0b, i.e. 0b00001010 (ten)

European standards

M-Bus standard EN 13757-3:2013: Communication systems for and remote reading of meters – Part 3: Dedicated application layer.

2. Safety

The following safety precautions must be observed during all phases of the operation, usage, service, or repair of the product. Users of the product are advised to convey the following safety information to users and operating personnel and to incorporate these guidelines into all manuals supplied with the product. Failure to comply with these precautions violates safety standards of design, manufacture and intended use of the product. Elvaco AB assumes no liability for customer's failure to comply with these precautions.

Caution
This is an electrostatic-sensitive product. Observe the necessary ESD protective measures when installing the product.

Note
The product receives and transmits radio frequency energy while switched on. Remember that interference can occur if the product is used close to TV sets, radios, computers or inadequately shielded equipment. Follow any special regulations and always switch off the product wherever forbidden, or when you suspect that it may cause interference or danger.

Note
Waste electrical products should not be disposed of with household waste. Please recycle where facilities exist. Contact your Local Authority for recycling advise.

3. Product overview

3.1. Application description

CMi4140 is a meter connectivity module mounted inside a Kamstrup MULTICAL 403/603/803 heating/cooling meter to deliver meter data to a receiving server via a LoRaWAN® network. The module is energy-efficient and offers 11 years of battery lifetime with EcoMode enabled. It can be retrofitted into deployed meters and is ideal for applications where long range is required. CMi4140 is easily configured through Elvaco OTC mobile app, or via downlink commands. With CMi4140, Elvaco offers a meter connectivity module designed for customers that require a user-friendly and cost-effective solution.

3.2. Features

CMi4140 offers a combination of battery operation with very long lifetime and a versatile application through its many configuration options. Key features of the module include:

- **LoRaWAN Certified^{CM}**
  The CMi4140 is countrified according to LoRa Alliance®.
  For more information, see https://lora-alliance.org/.
- **Extensive battery lifetime**
  The module's EcoMode feature enables the module to achieve a battery-lifetime of at least 11+1 years.
- **No meter installation needed**
  As soon as the meter connectivity module is mounted in the meter and activated, it will try to join a LoRaWAN® network and start to deliver meter data, i.e. no manual steps need to be taken in order to install the product in the meter.
- **Easy and secure commissioning**
  With Elvaco's One-Touch Commissioning (OTC), deployment, configuration and key transferring can be performed in a secure and flexible way. Use the Elvaco OTC App to enter your desired settings and place your phone next to the meter. New settings will be applied via NFC.
- **Unique and flexible message schemes**
  CMi4140 comes with several different message formats to choose from. This makes it easy to customize the product to the demands of your application.

3.3. Compatibility

CMi4140 is compatible with Kamstrup MULTICAL® 403, MULTICAL® 603 and MULTCAL® 803 heat/cooling meters with a compatible firmware version. Once the module is mounted and activated, a compatibility check is made to ensure that it is compatible with the meter firmware. If the module is mounted in an incompatible meter, this is indicated in the Elvaco OTC App.

3.4. Parts overview

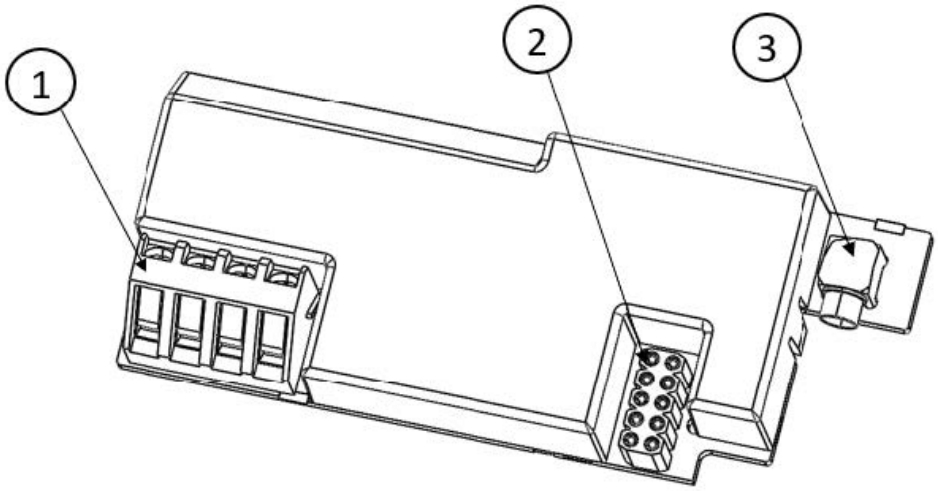

1. Pulse inputs In A and In B (allowing to connect adjacent pulse meters)
2. Power connector
3. MCX antenna connector

> **Note**
> The MCX antenna connector is used for connecting either an internal or an external antenna.

4. Installation

4.1. Mounting the product

CMi4140 can be used in either a Kamstrup MULTICAL® 403, MULTICAL® 603, or a MULTICAL® 803 heat/cooling meter. If the module is not mounted in the meter upon delivery, it is easily inserted and installed:

1. Grab the device by the outer edges.
2. Gently press it into position in the module slot.
3. Connect the power connector to the meter power supply.

4.2. Connection of the LoRaWAN® antenna

CMi4140 has an option for using either an internal or an external LoRaWAN® antenna. Since both antennas are using the MCX connector, they are interchangeable.

1. Connect the internal or external or antenna with MCX connector to the module in the meter.
2. Route the antenna cable (if using an external antenna)
3. Push the connector gently into the socket on the module.

> ⚠ **Caution**
> If using an external antenna, make sure to mount it at least 0.5 meters away from the meter in order not to cause interference.

4.3. Activating the module

> ⓘ **Note**
> Before activating the module, and trying to join a LoRaWAN® network, make sure the LoRaWAN® network server of use is prepared with necessary device and security related information. Security keys for Elvaco devices can be accessed in Elvaco EVO, Elvaco EVO Login.

Upon delivery, the module is set to inactive mode, which means no messages will be transmitted from the module before being activated. The module can be activated either via the buttons on the meter, or via the Elvaco OTC App:

Module activation via meter buttons

- On MULTICAL® 403, press and hold both buttons on the front of the meter until “CALL” is displayed.
- On MULTICAL® 603 and MULTICAL® 803, press down the two arrow buttons on the front of the meter until “CALL” is displayed.

Module activation via Elvaco OTC App

1. Open Elvaco OTC app (available for Android and iOS).
2. Scan the module (make sure NFC is activated on the phone).
3. Go to **Apply mode**.
4. Set the power mode to **Active**.
5. Select **Apply settings**.

6. Scan the module to apply new settings.
   To verify that the module has been activated, go to **Inspect**, scan the module, and make sure that power mode is set to **Active**.

Tip

- If the module is mounted inside a MULTICAL® 403, the NFC field is easiest accessible if placing your phone in the middle of the higher part of the back.
- MULTICAL® 603 has two module slots. If mounted in the left module slot, the NFC field is easiest accessible if placing your phone in the middle of the higher part of the back. If the module is mounted in the right module slot, place your phone to the right of the higher part of the back.
- If the module is mounted in MULTICAL® 803, the meter needs to be open to access the NFC field. Place your phone close to the CMi4140 when making the NFC scan.

4.4. LoRaWAN® network end-device activation

Before being able to transmit data over a LoRaWAN® network, the module must be personalized and activated. This can be done in two different ways for LoRaWAN®, Over-the-air activation (OTAA) or Activation by Personalization (ABP). For security reasons, Elvaco strongly recommends using OTAA, where all network keys are generated each time the module joins the LoRaWAN® network. In contrast, for ABP, all keys are set manually and stay constant over time.

In OTAA mode

Before the module is able to transmit messages via the LoRaWAN® network, device information needs to be added to the network server. More specifically, the following parameters needs to be registered in order to enable the network server to receive messages from the module:

Device EUI	16 digit module unique identification number. It is not configurable.
Application key	The application key of each device is generated by Elvaco and used in OTAA mode to generate network keys when the module joins the LoRaWAN® network. Keys are managed in a secure way using Elvaco's OTC (One Touch Commissioning) solution which includes the mobile application for configuration.
JoinEUI	Sets the identification number of the join server. The identification number is set to a default value in all devices. The default value is presented in Elvaco OTC configuration options.

In ABP mode

If the activation mode is set to ABP, the application key does not need to be added to the network server. Instead the following information will be needed:

Network session key	Used by both the module and the network server.
Application session key	Used for payload encryption and decryption.
Device address	Unique identifier of the module.

4.5. Reading the module status via meter display

In addition to the Elvaco OTC App, the current status of the module can be read via the meter display. To retrieve the status of the module via the meter display, enter the tech loop of the meter display and request the status information of the module. For detailed information, see the Kamstrup MULTICAL® Technical description.

The following table provides a description of how the current status of module is read off the meter's display.

As an example, if the display shows "5311111", that means that the module has been activated and has successfully joined the LoRaWAN® network.

Table 1. Module status indication on meter display

Character, MSB -> lsb	Status
1-2	53 = Module identification number (CMi4140)
3	1 = All following characters are set to “1” 0 = One or more of the following characters are set to “0”
4	1 = Meter has granted active mode for the module 0 = Meter has requested the module to be idle
5	1 = Module has joined the LoRaWAN® network 0 = module has not joined the LoRaWAN® network
6	1 = Module SuperCap has been charged 0 = Module SuperCap is charging
7	1 = Module is active 0 = Module is inactive

5. Operation

5.1. Configuration

CMi4140 can be configured in two ways, either via the Elvaco OTC App, or via downlink commands. Configuration via the Elvaco OTC App is highly flexible, and all configuration options available in the module can be set. In contrast, donwlink configuration comes with some limitations, where all options are not available. For a detailed view of what's options available, see Downlink configuration options [16].

> **Important**
> Before relying on downlink configuration, a complete understanding of its limitations in terms of accessibility and limited option set should be considered and understood.

Via Elvaco OTC app

The module is configured via the Elvaco OTC app. The app uses NFC to transfer settings to the module. It is compatible with iPhone or Android phones with Android 5.0 or later. The OTC app can be downloaded from Google Play for Android and App Store for iOS.

It is possible to create a configuration profile to apply preconfigured settings to multiple devices. For further information, refer to the OTC app documentation, available on the Elvaco website.

1. Open the Elvaco OTC app on your smartphone.
2. Place your smartphone close to the device and press **Scan**.
3. After a successful scan, the current settings will be displayed on the **Inspect** tab.
4. To change settings, go to the **Apply** tab. Use the toggle button to activate an option, and make your changes.
5. When done with changes press **Apply** at the bottom of the screen, then apply settings. Repeat step 2 to change the settings in the device.
   A successful change is acknowledged by a vibration.

> **Tip**
> - If the module is mounted inside a MULTICAL® 403, the NFC field is easiest accessible if placing your phone in the middle of the higher part of the back.
> - MULTICAL® 603 has two module slots. If mounted in the left module slot, the NFC field is easiest accessible if placing your phone in the middle of the higher part of the back. If the module is mounted in the right module slot, place your phone to the right of the higher part of the back.
> - If the module is mounted in MULTICAL® 803, the meter needs to be open to access the NFC field. Place your phone close to the CMi4140 when making the NFC scan.

Via downlink

The product supports configuration via downlink, i.e. sending commands to an end-device via the LoRaWAN® network. Communication via downlink is sent on LoRa port 2 and can only be made in a short window after an uplink transmission from module to server. Therefore, time-critical communication should not be performed over downlink.

Downlink commands are structured according to the following format: *“0x00” "TLV" "Number of bytes in configuration" "Configuration"*.

> **Note**
> The downlink feature should only be used sparingly due to bandwidth consideration.

5.2. Transmit interval

The transmit interval is used to set how frequently the module should transmit data on the LoRaWAN® network. The parameter can be set to a value between 5 and 1440 minutes (i.e. between 5 minute values and daily values). It is possible to fix the transmit interval, but for battery operated devices where battery lifetime is critical, Elvaco recommends using the EcoMode feature, adapting the transmit interval depending on prevailing radio conditions.

5.2.1. Transmit interval using EcoMode

When EcoMode is active, a battery-lifetime of at least 11+1 years is guaranteed for the module. The module is able to achieve this by using a table of allowed transmit intervals settings for each data rate. When radio conditions are poor (and data rate is low), the module will be able to send data less frequently in order to conserve battery-life. When signal conditions are good, the module will be able to send data more frequently. When EcoMode is enabled, the module will continuously check if the set transmit interval is “allowed” by the EcoMode table. If a lower transmit interval is needed for the specific data rate in order to achieve 11 years of battery life, the module will adjust the parameter accordingly.

The following table shows the transmit intervals that the module will use for different data rates in order to achieve a11-year battery-life.

Table 2. Transmit intervals for different data rates in EcoMode

Data rate	Transmit interval
DR0	180 min
DR1	120 min
DR2	60 min
DR3	30 min
DR4-DR5	15 min

The following table shows the transmit interval for different data rates when using a message format with two telegrams, such as the Scheduled Extended+. Sending two telegrams instead of one will double the possible transmit interval using EcoMode.

Table 3. Transmit intervals for different data rates in EcoMode using a two-telgeram message format

Data rate	Transmit interval
DR0	360 min
DR1	240 min
DR2	120 min
DR3	60 min
DR4-DR5	30 min

> **Note**
> For applications where battery lifetime is critical, EcoMode should be enabled. If EcoMode has been disabled, battery-life guarantees no longer apply, even if EcoMode is activated later on.

5.3. Time handling

The module relies on the meter’s clock for keeping time. Time in the meter is assumed to be in standard local time (no DST). When synchronizing time in the meter using the Elvaco OTC App, local standard time is always used, even if DST is in effect. The timestamped meter data sent from the module can be adjusted to be sent in UTC by specifying the “UTC offset” configuration parameter. The UTC offset

will be subtracted from the timestamp prior to transmission. If the meter is in Sweden, which uses CET (Central European Time), it should have UTC offset set to +60 (+1h). In this case at time 12.00 a telegram is sent with timestamp 11.00 as this is the corresponding UTC time. A meter in New York (USA) should have a UTC offset of "-300" (-5h) etc. A UTC offset of "0" means the meter time is used as-is.

If the meter is set to used DST this is ignored by the module and the standard time is used. Thus, the time on the meter's display may not match the time in the telegram or in the Elvaco OTC App.

5.4. Adaptive data rate (ADR)

ADR is part of the LoRaWAN® standard where the network server determines the optimal rate of communication for the module based on current signal conditions. In the best radio conditions, the module will use its highest data rate (DR5) in order to be as energy-efficient as possible. When signal conditions are poor, the network server will incrementally lower the data rate until it is able to receive the message. When the data rate is low, the energy consumption per telegram will increase.

5.5. Message encoding

All message formats encoded to M-Bus standard will have the following structure. Each telegram begins with one byte specifying the message format. Then follows a sequence of data information blocks (DIBs). The data and structure of the DIBs depends on the message type set. Each DIB contains a data information field (DIF), a value information field (VIF) and a data field (DATA), where the actual payload is stored.

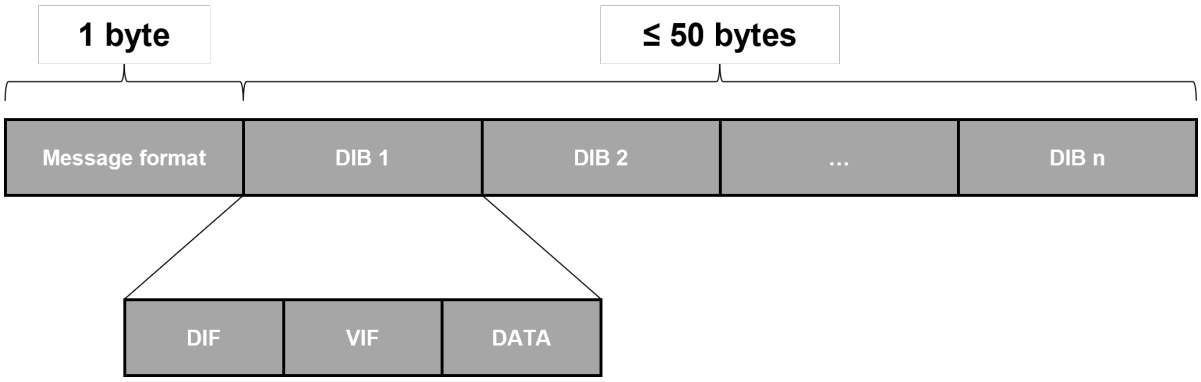

M-Bus message structure

> **Note**
> If using message format JSON, the data will be presented as plain text, and not according to the M-Bus structure as presented above.

5.6. Security and access control

The product has a configuration lock feature, which prevents unauthorized access to the module. When configuration lock has been enabled, a device-specific Product Access Key (PAK) will be needed to access the device. Keys are managed in a secure way using Elvaco's OTC solution which includes the mobile application for configuration.

> **Note**
> For more information about security and access control for the product, refer to the One-touch commissioning (OTC) documentation, available on the Elvaco website.

5.7. Reset procedures

5.7.1. Rebooting the module

The module can be rebooted using the Elvaco OTC App:

Via the Elvaco OTC app

1. Open the Elvaco OTC app.
2. Scan the module.
3. Go to **Apply mode**.
4. Choose the **reboot switch** and **apply changes**.

5.7.2. Switching off the module

To switch off the module use the Elvaco OTC app.

1. Open the Elvaco OTC app.
2. Scan the module.
3. Go to **Apply mode**.
4. Choose **switch off** and **apply changes**.

> **Note**
> This function is restricted to registered owner of the product in Elvaco OTC app and will not be visible/available for other users.

5.8. Meter communication error messages

The payloads using M-Bus encoded data uses the Function field of the DIF to indicate errors. In this case it is set to “value during error state” (M-Bus standard EN 13757-3:2013) and the value sent should not be used. A typical case for this is when the module is unable to communicate with the meter and retrieve meter values, in which case all the fields in the payload have the DIF indicating “value during error state”. In case of erroneous data or if the module is unable to communicate with meter, bit 4-5 of the bit of the DIF code (first byte of each index field) will be set to 11b.

Example 1. Example

A DIF code of 0x02 will be set to 0x32 in case of error. (This applies to all message format except JSON.) For message format JSON, the actual value will be replaced with “null” in case of error state. If no meter communication is possible at all, all fields have this error indication set.

6. Configuration options

6.1. Elvaco OTC App configuration options

Below table list all settings that can be made using the Elvaco OTC App. If the device is locked, and the app user does not have access to the PAK key, available settings are only readable.

Table 4. All configuration options

Field name (Abbr.)	Description	Default value	Locked device & correct PAK or open device	Locked device & no PAK	Downlink
Meter ID	Meter identification number of the meter. Not configurable.	N/A	Readable	Readable	N/A
Power mode	Used to activate/deactivate the module.	Inactive	Readable / Writeable	Readable	N/A
Message format	The message format determines the structure and payload of the telegram sent from the module.	0x15 (Standard)	Readable / Writeable	Readable	Writeable
EcoMode	When activated, 11+1 years of battery-life is guaranteed by adapting the transmit interval of the module to current signal conditions (using Kamstrup's D-Cell meter battery).	On	Readable / Writeable	Readable	Writeable
Transmit interval	Sets the number of minutes between each transmission from the module	60 min	Readable / Writeable	Readable	Writeable
Date & Time	Date and time set for the meter.	N/A	Readable	Readable	N/A
Set absolute time	Sets the time of the meter.	N/A	Writeable	N/A	N/A
Set Time Relative	Adjusts the time of the meter relative to the current time	N/A	N/A	N/A	Writeable
Set UTC offset	Sets the UTC offset of the meter.	N/A	Readable / Writeable	Readable	Writeable
Configuration Lock	Locks the module to prevent unauthorized access.	Open	Readable / Writeable	Readable	Writeable
LoRaWAN® settings					
Device EUI	Unique module identification number. Not configurable.	Device-unique 64-bit number	Readable	Readable	N/A
Activation type	Sets the way the device joins the LoRaWAN® network.	OTAA	Readable / Writeable	Readable	N/A
Network join	Displays whether the module has joined the LoRaWAN® network or not.	N/A	Readable	Readable	N/A
JoinEUI	Application ID that determines where data ends up.	0x 94 19 3A 03 0B 00 00 01	Readable / Writeable	Readable	N/A
Device address	32-bit address used by the module to identify itself on the LoRaWAN® network.	N/A	Readable / Writeable	N/A	N/A
Current data rate	The current data rate used for the module.	N/A	Readable	Readable	N/A

6.2. Downlink configuration options

Below table list what settings that can be made using the LoRaWAN® downlink commands.

Table 5. Downlink commands

Field name	TLV	Number of bytes in configuration	Configuration	Example
Configuration lock	0x05	0x01	0x00 = Locked 0x01 = Open	0x00050101 (Enables configuration lock)
Transmit interval	0x06	0x02	0xNumber of minutes between transmission (lsByte -> msByte)	0x0006021E00 (Sets the Tx interval to 30 minutes)
Message format	0x07	0x01	0x15 = Message format Standard 0x16 = Message format Compact 0x17 = Message format JSON 0x18 = Message format Scheduled-daily redundant 0x19 = Message format Scheduled-Extended 0x1A = Message format Combined heat/cooling 0x1B = Message format Heat Intelligence 0x3B* = Message format Scheduled Extended+ 0x1C* = Message format Pulse 0x4D* = Message format Pulse Extended **Note** *message formats built up by 2 telegrams. only the first Message ID should be included in the downlink command)	0x00070116 (Sets the message format to compact)
EcoMode	0x0F	0x01	0x00 = Disable EcoMode 0x01 = Enable EcoMode	0x000F0100 (Disables EcoMode)
Set Time Relative	0x13	0x04	0xNumber of seconds* (lsByte -> msByte) *Negative numbers supported.	0x0013043C000000 (Adds 60 seconds to the current time) 0x0013043C000080 (Subtracts 60 seconds from the current time)
UTC offset	0x17	0x02	0xNumber of minutes* (lsByte -> msByte) *Negative numbers supported.	0x17023C00 (Sets the UTC offset to +60 minutes) 0x17023C80 (Sets the UTC offset to -60 minutes)
Reboot	0x22	0x02	0x759E is used to reboot device (note endianness, LSB first).	0x0022029E75 (Reboots the device)

6.3. Message formats

To allow a flexible output from the device, CMi4140 has several message formats. Some of them are scheduled, meaning the meter is read on top of every hour, and sending a clock message once per day, see Scheduled message formats [20].

Table 6. CMi4140 message formats

Message format name	Message ID	Scheduled	Introduced in FW
Standard	`0x15`	No	1.0.1
Compact	`0x16`	No	1.0.1
JSON	`0x17`	No	1.0.1
Scheduled Daily Redundant	`0x18`	Yes	1.0.1
Scheduled Extended	`0x19`	Yes	1.0.1
Combined heating/cooling	`0x1A`	Yes	1.0.1
Heat Intelligence	`0x1B`	Yes	1.0.1
Scheduled Extended+	`0x3B` telegram 1 `0x3C` telegram 2	Yes	1.0.3
Pulse	`0x1C` telegram 1 `0x1D` telegram 2	Yes	1.0.4
Pulse Extended	`0x4D` telegram 1 `0x4E` telegram 2	Yes	1.0.4

> **Note**
> Message formats with more than one message ID, such as Pulse Extended, have been divided into several telegrams due to size limitations.

6.3.1. Unscheduled message formats

6.3.1.1. Standard

Table 7. Payload, message format Standard [0x15]

Field	Size	Data type	Description
Message format identifier	1 byte	-	0x15 (Standard)

Field	Size	Data type	Description
Heat energy E1 / Cooling energy E3	6-7 bytes	INT32	Energy consumption (Wh, J, Cal) 0400xxxxxxxx = xxxxxxxx,xxx Wh 0401xxxxxxxx = xxxxxxxx,xx Wh 0402xxxxxxxx = xxxxxxxx,x Wh 0403xxxxxxxx = xxxxxxxx Wh 0404xxxxxxxx = xxxxxxxx * 10 Wh 0405xxxxxxxx = xxxxxxxx * 100 Wh 0406xxxxxxxx = xxxxxxxx kWh 0407xxxxxxxx = xxxxxxxx * 10 kWh 040Exxxxxxxx = xxxxxxxx MJ 040Fxxxxxxxx = xxxxxxxx * 10 MJ 04FB0Dxxxxxxxx = xxxxxxxx MCal 04FB0Exxxxxxxx = xxxxxxxx * 10 MCal 04FB0Fxxxxxxxx = xxxxxxxx * 100 MCal
Volume	6 bytes	INT32	Volume (m³) 0411xxxxxxxx = xxxxxxxx * 0.00001 m³ 0412xxxxxxxx = xxxxxxxx * 0.0001 m³ 0413xxxxxxxx = xxxxxxxx * 0.001 m³ 0414xxxxxxxx = xxxxxxxx * 0.01 m³ 0415xxxxxxxx = xxxxxxxx * 0.1 m³ 0416xxxxxxxx = xxxxxxxx m³ 0417xxxxxxxx = xxxxxxxx * 10 m³
Power	4 bytes	INT16	Power (W) 022Bxxxx = xxxx W 022Cxxxx = xxxx * 10 W 022Dxxxx = xxxx * 100 W 022Exxxx = xxxx kW 022Fxxxx = xxxx * 10 kW
Flow	4 bytes	INT16	Flow (m³/h) 023Bxxxx = xxxx * 0.001 m³/h 023Cxxxx = xxxx * 0.01 m³/h 023Dxxxx = xxxx * 0.1 m³/h 023Exxxx = xxxx m³/h 023Fxxxx = xxxx * 10 m³/h
Fw temp	4 bytes	INT16	Forward temperature (°C) 0258xxxx = xxxx * 0.001 °C 0259xxxx = xxxx * 0.01 °C 025Axxxx = xxxx * 0.1 °C 025Bxxxx = xxxx °C

Field	Size	Data type	Description
Rt temp	4 bytes	INT16	Return temperature (°C) 025Cxxxx = xxxx * 0.001 °C 025Dxxxx = xxxx * 0.01 °C 025Exxxx = xxxx * 0.1 °C 025Fxxxx = xxxx °C
Meter ID	6 bytes	According to M-Bus EN13757-3 identification field	Meter ID 0C78xxxxxxxx
Info bits	7 bytes	INT32	Error and warning flags 04FD17xxxxxxxx For further information about Info bits please refer to the meter's manual

6.3.1.2. Compact

Table 8. Payload, message format Compact [0x16]

Field	Size	Data type	Description
Message format identifier	1 byte	-	0x16 (Compact)
Heat energy E1 / Cooling energy E3	6-7 bytes	INT32	Energy consumption (Wh, J, Cal) 0400xxxxxxxx = xxxxxxxx,xxx Wh 0401xxxxxxxx = xxxxxxxx,xx Wh 0402xxxxxxxx = xxxxxxxx,x Wh 0403xxxxxxxx = xxxxxxxx Wh 0404xxxxxxxx = xxxxxxxx * 10 Wh 0405xxxxxxxx = xxxxxxxx * 100 Wh 0406xxxxxxxx = xxxxxxxx kWh 0407xxxxxxxx = xxxxxxxx * 10 kWh 040Exxxxxxxx = xxxxxxxx MJ 040Fxxxxxxxx = xxxxxxxx * 10 MJ 04FB0Dxxxxxxxx = xxxxxxxx MCal 04FB0Exxxxxxxx = xxxxxxxx * 10 MCal 04FB0Fxxxxxxxx = xxxxxxxx * 100 MCal
Meter ID	6 bytes	According to M-Bus EN13757-3 identification field	Meter ID 0C78xxxxxxxx
Info bits	7 bytes	INT32	Error and warning flags 04FD17xxxxxxxx For further information about Info bits please refer to the meter's manual

6.3.1.3. JSON

For message format JSON, the data is presented in a plain text format, instead of M-Bus, as the other message formats. Below table contains a description of all fields included in the JSON telegram.

Table 9. Payload, message format JSON [0x17]

Field	Description
Message format identifier	0x17 (Message format JSON)
Energy	Energy consumption
Unit	Unit of energy consumption (Wh, kWh, MWh, GWh, J, kJ, MJ, GJ, Cal, kCal, MCal or GCal)
Meter ID	Identification number of the meter in which the module is mounted.

See the following example of a telegram for message format JSON:

{"E":12345678,"U":"kWh","ID":87654321}

6.3.2. Scheduled message formats

For message scheduled formats, such as Scheduled Daily Redundant Pulse Extended, two types of messages will be transmitted from the module - a clock message and a data message. Scheduled message formats will read the meter on top of the hour, allowing a predictability of the received telegrams. The difference between a clock message and a data message is described in the following table.

Table 10. Clock message and data message

Message	Time interval	Description
Clock message	Once per day	The clock message presents the current time of the meter. It can be used to verify that the clock is correct and has not drifted more than accepted.
Data message	Determined by Transmit interval parameter	The actual meter data collected from the meter.

The following table contains a detailed description of the payload of the clock message.

Table 11. Payload, clock message

Field	Size	Data type	Description
Message format identifier	1 byte	-	0xFA (=Clock message)
Data/Time	6 bytes	32 bit binary integer M-Bus type F	046Dxxxxxx = Valid date/time message 346Dxxxxxx = Invalid date/time message

The clock message will be transmitted once every day and the data message at least (regulated by transmit interval parameter or EcoMode) once every day. The transmit interval can only be set the values listed in Table 12, “Transmit interval options ” [21].

Although the meter readout will occur on top-of-the-hour, the data message will not necessarily be transmitted at that exact time. The LoRaWAN® transmission will occur after a random delay of 0-15 minutes to decrease the risk of collisions. The readout for the clock message occurs at a random hour (00:00- 23:00) at a random minute in the 35-45 interval and will be transmitted immediately after the readout.

> **Note**
> When using scheduled message formats, the transmit interval cannot not be set to higher than 1440 (24 hours).

Table 12. Transmit interval options

Parameter	Values	Unit
Transmit interval	60, 120, 180, 240, 360, 480, 720, 1440	Minutes

6.3.2.1. Scheduled Daily Redundant

Message format *Scheduled Daily Redundant* contains an accumulated daily energy field, which is updated at 24:00 each day. In other words, depending on transmit interval settings and data rate, the field will be included in between 1-24 telegrams per day. This will increase the probability of the value being received. For example, if the transmit interval is set to “2”, the accumulated energy read at 24:00 will be transmitted 12 times during the 24 next coming hours (every 2nd hour).

Table 13. Payload, message format Scheduled Daily Redundant [0x18]

Field	Size	Data type	Description
Message format identifier	1 byte	-	0x18 (Scheduled-daily redundant)
Heat energy E1 / Cooling Energy E3	6-7 bytes	INT32	Energy consumption (Wh, J, Cal) 0400xxxxxxxx = xxxxxxxx,xxx Wh 0401xxxxxxxx = xxxxxxxx,xx Wh 0402xxxxxxxx = xxxxxxxx,x Wh 0403xxxxxxxx = xxxxxxxx Wh 0404xxxxxxxx = xxxxxxxx * 10 Wh 0405xxxxxxxx = xxxxxxxx * 100 Wh 0406xxxxxxxx = xxxxxxxx kWh 0407xxxxxxxx = xxxxxxxx * 10 kWh 040Exxxxxxxx = xxxxxxxx MJ 040Fxxxxxxxx = xxxxxxxx * 10 MJ 04FB0Dxxxxxxxx = xxxxxxxx MCal 04FB0Exxxxxxxx = xxxxxxxx * 10 MCal 04FB0Fxxxxxxxx = xxxxxxxx * 100 MCal
Volume	6 bytes	INT32	Volume (m³) 0411xxxxxxxx = xxxxxxxx * 0.00001 m³ 0412xxxxxxxx = xxxxxxxx * 0.0001 m³ 0413xxxxxxxx = xxxxxxxx * 0.001 m³ 0414xxxxxxxx = xxxxxxxx * 0.01 m³ 0415xxxxxxxx = xxxxxxxx * 0.1 m³ 0416xxxxxxxx = xxxxxxxx m³ 0417xxxxxxxx = xxxxxxxx * 10 m³
Meter ID	6 bytes	According to M-Bus EN13757-3 identification field	Meter ID 0C78xxxxxxxx

Field	Size	Data type	Description
Info bits	7 bytes	INT32	Error and warning flags 04FD17xxxxxxxx For further information about Info bits please refer to the meter's manual
Meter date/ time	6 bytes	INT32	Meter date and time (YY-MM-DD HH:MM) 046Dxxxxxxxx Bit 31-28 = Year-high* Bit 27-24 = Month Bit 23-21 = Year-low* Bit 20-16 = Day Bit 15 = Summertime flag** Bit 12-8 = Hour Bit 7 = Error flag*** Bit 6 = Reserved for future use*** Bit 5-0 = Minute *The year is read by combining the year-high and year-low field. For example, year-high = 0010 and year-low = 010 => year = 0010010 **0 = standard time, 1= daylight-saving time ***0 = timestamp is valid, 1 = timestamp is not valid
Accumulated heat / cooling energy at 24:00	6-7 bytes	INT32	Energy consumption (Wh, J, Cal) 4400xxxxxxxx = xxxxxxxx,xxx Wh 4401xxxxxxxx = xxxxxxxx,xx Wh 4402xxxxxxxx = xxxxxxxx,x Wh 4403xxxxxxxx = xxxxxxxx Wh 4404xxxxxxxx = xxxxxxxx *10 Wh 4405xxxxxxxx = xxxxxxxx *100 Wh 4406xxxxxxxx = xxxxxxxx kWh 4407xxxxxxxx = xxxxxxxx * 10 kWh 440Exxxxxxxx = xxxxxxxx MJ 440Fxxxxxxxx = xxxxxxxx * 10 MJ 44FB0Dxxxxxxxx = xxxxxxxx MCal 44FB0Exxxxxxxx = xxxxxxxx * 10 MCal 44FB0Fxxxxxxxx = xxxxxxxx * 100 MCal Note: Before a midnight reading has been performed the Function field of the DIF is set to "value during error state" to indicate that the value is not valid.

6.3.2.2. Scheduled Extended

The data message format *Scheduled Extended* contains all the data fields from message format *Standard*. In addition to these, it also includes the meter date/time to transmit messages on the full hour.
As for all scheduled message formats, the transmit interval can only be set to the values included in Table 12, “Transmit interval options ” [21]

The following tables contains a detailed description of the payload of message format *Scheduled Extended*.

Table 14. Payload, message format Scheduled Extended [0x19]

Field	Size	Data type	Description
Message format identifier	1 byte	-	0x19 (Scheduled-Extended)
Heat energy E1 / Cooling Energy E3	6-7 bytes	INT32	Energy consumption (Wh, J, Cal) 0400xxxxxxxx = xxxxxxxx,xxx Wh 0401xxxxxxxx = xxxxxxxx,xx Wh 0402xxxxxxxx = xxxxxxxx,x Wh 0403xxxxxxxx = xxxxxxxx Wh 0404xxxxxxxx = xxxxxxxx * 10 Wh 0405xxxxxxxx = xxxxxxxx * 100 Wh 0406xxxxxxxx = xxxxxxxx kWh 0407xxxxxxxx = xxxxxxxx * 10 kWh 040Exxxxxxxx = xxxxxxxx MJ 040Fxxxxxxxx = xxxxxxxx * 10 MJ 04FB0Dxxxxxxxx = xxxxxxxx MCal 04FB0Exxxxxxxx = xxxxxxxx * 10 MCal 04FB0Fxxxxxxxx = xxxxxxxx * 100 MCal
Volume	6 bytes	INT32	Volume (m³) 0411xxxxxxxx = xxxxxxxx * 0.00001 m³ 0412xxxxxxxx = xxxxxxxx * 0.0001 m³ 0413xxxxxxxx = xxxxxxxx * 0.001 m³ 0414xxxxxxxx = xxxxxxxx * 0.01 m³ 0415xxxxxxxx = xxxxxxxx * 0.1 m³ 0416xxxxxxxx = xxxxxxxx m³ 0417xxxxxxxx = xxxxxxxx * 10 m³
Power / Flow / Fw temp / Rt temp	12 bytes	INT64	Byte 0-2 = DIF/VIF codes, 0x07FFA0 Byte 3 = VIFE defining scaling of Power/Flow -Bit 6.4 (n), 10n-3 W, n = 0..7 -Bit 2..0 (m), 10m-3 m³/h, m = 0..7 Byte 4-5 = Fw temp (lsByte -> msByte), °C, 2 decimals Byte 6-7 = Rt temp (lsByte -> msByte), °C, 2 decimals Byte 8-9 = Flow (lsByte -> msByte), 10m-6 m³/h Byte 10-11 = Power (lsByte -> msByte), 10n-3 W

Field	Size	Data type	Description
Meter ID / Info bits	11 bytes	INT96	Byte 0-2 = DIF/VIF codes, 0x07FF21 Byte 3-6 = Info bits (lsByte -> msByte) Byte 7-10 = Meter ID (lsByte -> msByte)* *Sent in binary format
Meter date/ time	6 bytes	INT32	Meter date and time (YY-MM-DD HH:MM) 046Dxxxxxxxx Bit 31-28 = Year-high* Bit 27-24 = Month Bit 23-21 = Year-low* Bit 20-16 = Day Bit 15 = Summertime flag** Bit 12-8 = Hour Bit 7 = Error flag*** Bit 6 = Reserved for future use*** Bit 5-0 = Minute *The year is read by combining the year-high and yearlow field. For example, year-high = 0010 and year-low = 010 => year = 0010010 **0 = standard time, 1= daylight-saving time ***0 = timestamp is valid, 1 = timestamp is not valid

6.3.2.3. Combined heat/cooling

> **Note**
> Message format Combined heat/cooling is only meant to be used in combined heat/cooling meters.

Table 15. Payload, message format Combined heat/cooling [0x1A]

Field	Size	Data type	Description
Message format identifier	1 byte	-	0x1A (Combined heat/cooling)

Field	Size	Data type	Description
Heat energy E1	6-7 bytes	INT32	Energy consumption (Wh, J, Cal) 0400xxxxxxxx = xxxxxxxx,xxx Wh 0401xxxxxxxx = xxxxxxxx,xx Wh 0402xxxxxxxx = xxxxxxxx,x Wh 0403xxxxxxxx = xxxxxxxx Wh 0404xxxxxxxx = xxxxxxxx * 10 Wh 0405xxxxxxxx = xxxxxxxx * 100 Wh 0406xxxxxxxx = xxxxxxxx kWh 0407xxxxxxxx = xxxxxxxx * 10 kWh 040Exxxxxxxx = xxxxxxxx MJ 040Fxxxxxxxx = xxxxxxxx * 10 MJ 04FB0Dxxxxxxxx = xxxxxxxx MCal 04FB0Exxxxxxxx = xxxxxxxx * 10 MCal 04FB0Fxxxxxxxx = xxxxxxxx * 100 MCal
Cooling Energy E3	8-9 bytes	INT32	Energy consumption (Wh, J, Cal) 0483FF02xxxxxxxx = xxxxxxxx Wh 0484FF02xxxxxxxx = xxxxxxxx * 10 Wh 0485FF02xxxxxxxx = xxxxxxxx * 100 Wh 0486FF02xxxxxxxx = xxxxxxxx kWh 0487FF02xxxxxxxx = xxxxxxxx * 10 kWh 048EFF02xxxxxxxx = xxxxxxxx MJ 048FFF02xxxxxxxx = xxxxxxxx * 10 MJ 04FB8DFF02xxxxxxxx = xxxxxxxx MCal 04FB8EFF02xxxxxxxx = xxxxxxxx * 10 MCal 04FB8FFF02xxxxxxxx = xxxxxxxx * 100 MCal
Volume	6 bytes	INT32	Volume (m³) 0411xxxxxxxx = xxxxxxxx * 0.00001 m³ 0412xxxxxxxx = xxxxxxxx * 0.0001 m³ 0413xxxxxxxx = xxxxxxxx * 0.001 m³ 0414xxxxxxxx = xxxxxxxx * 0.01 m³ 0415xxxxxxxx = xxxxxxxx * 0.1 m³ 0416xxxxxxxx = xxxxxxxx m³ 0417xxxxxxxx = xxxxxxxx * 10 m³
Fw temp	4 bytes	INT16	Forward temperature (°C) 0258xxxx = xxxx * 0.001 °C 0259xxxx = xxxx * 0.01 °C 025Axxxx = xxxx * 0.1 °C 025Bxxxx = xxxx °C

Field	Size	Data type	Description
Rt temp	4 bytes	INT16	Return temperature (°C) 025Cxxxx = xxxx * 0.001 °C 025Dxxxx = xxxx * 0.01 °C 025Exxxx = xxxx * 0.1 °C 025Fxxxx = xxxx °C
Meter ID	6 bytes	According to M-Bus EN13757-3 identification field	Meter ID 0C78xxxxxxxx
Info bits	7 bytes	Unit32	Error and warning flags 04FD17xxxxxxxx For further information about Info bits please refer to the meter's manual

6.3.2.4. Heat intelligence

This telegram will be adapted to the type of meter in which the module is mounted. That means that it will look slightly different depending on whether the module is mounted in a heat meter, a cooling meter or a combined heat/cooling meter. Please note for instance that DIB 2 in below table is only included in combined heat/cooling meters, i.e. not in pure heat meters or pure cooling meters.

Table 16. Payload, message format Heat Intelligence [0x1B]

Field	Size	Data type	Description
Message format identifier	1 byte	-	0x1B (Heat intelligence)
Heat energy E1	6-7 bytes	INT32	Energy consumption (Wh, J, Cal) 0400xxxxxxxx = xxxxxxxx,xxx Wh 0401xxxxxxxx = xxxxxxxx,xx Wh 0402xxxxxxxx = xxxxxxxx,x Wh 0403xxxxxxxx = xxxxxxxx Wh 0404xxxxxxxx = xxxxxxxx * 10 Wh 0405xxxxxxxx = xxxxxxxx * 100 Wh 0406xxxxxxxx = xxxxxxxx kWh 0407xxxxxxxx = xxxxxxxx * 10 kWh 040Exxxxxxxx = xxxxxxxx MJ 040Fxxxxxxxx = xxxxxxxx * 10 MJ 04FB0Dxxxxxxxx = xxxxxxxx MCal 04FB0Exxxxxxxx = xxxxxxxx * 10 MCal 04FB0Fxxxxxxxx = xxxxxxxx * 100 MCal

Field	Size	Data type	Description
Cooling energy E3	8-9 bytes	INT32	Energy consumption (Wh, J, Cal) 0480 FF02xxxxxxxx = xxxxxxxx,xxx Wh 0481 FF02xxxxxxxx = xxxxxxxx,xx Wh 0482 FF02xxxxxxxx = xxxxxxxx,x Wh 0483FF02xxxxxxxx = xxxxxxxx Wh 0484FF02xxxxxxxx = xxxxxxxx * 10 Wh 0485FF02xxxxxxxx = xxxxxxxx * 100 Wh 0486FF02xxxxxxxx = xxxxxxxx kWh 0487FF02xxxxxxxx = xxxxxxxx * 10 kWh 048EFF02xxxxxxxx = xxxxxxxx MJ 048FFF02xxxxxxxx = xxxxxxxx * 10 MJ 04FB8DFF02xxxxxxxx = xxxxxxxx MCal 04FB8EFF02xxxxxxxx = xxxxxxxx * 10 MCal 04FB8FFF02xxxxxxxx = xxxxxxxx * 100 MCal
Volume	6 bytes	INT32	Volume (m³) 0411xxxxxxxx = xxxxxxxx * 0.00001 m³ 0412xxxxxxxx = xxxxxxxx * 0.0001 m³ 0413xxxxxxxx = xxxxxxxx * 0.001 m³ 0414xxxxxxxx = xxxxxxxx * 0.01 m³ 0415xxxxxxxx = xxxxxxxx * 0.1 m³ 0416xxxxxxxx = xxxxxxxx m³ 0417xxxxxxxx = xxxxxxxx * 10 m³
Meter ID / Info bits	16 bytes	INT96	Byte 0-2 = DIF/VIF codes, 0x07FF21 Byte 3-6 = Info bits (lsByte -> msByte) Byte 7-10 = Meter ID (lsByte -> msByte)* *Sent in binary format
Energy E8	7 bytes	INT32	Energy (m³ * °C) 04FF07xxxxxxxx = xxxxxxxx m³ * °C
Energy E9	7 bytes	INT32	Energy (m³ * °C) 04FF08xxxxxxxx = xxxxxxxx m³ * °C

6.3.2.5. Scheduled Extended+

The data message of message format *Scheduled mode-extended+* contains three tariffs and all the meter data included in the Standard telegram. In addition to these, a timestamp from the meter (meter date/time) is included in each telegram. It is divided into two telegrams for keeping each telegram below 45 bytes.

Table 17. Telegram 1 - Payload, message format Scheduled – Extended + [0x3B]

Field	Size	Data type	Description
Message format identifier	1 byte	-	0x3B (Scheduled-Extended +, telegram 1)

Field	Size	Data type	Description
Heat energy E1 / Cooling energy E3	6-7 bytes	INT32	Energy consumption (Wh, J, Cal) 0400xxxxxxxx = xxxxxxxx,xxx Wh 0401xxxxxxxx = xxxxxxxx,xx Wh 0402xxxxxxxx = xxxxxxxx,x Wh 0403xxxxxxxx = xxxxxxxx Wh 0404xxxxxxxx = xxxxxxxx * 10 Wh 0405xxxxxxxx = xxxxxxxx * 100 Wh 0406xxxxxxxx = xxxxxxxx kWh 0407xxxxxxxx = xxxxxxxx * 10 kWh 040Exxxxxxxx = xxxxxxxx MJ 040Fxxxxxxxx = xxxxxxxx * 10 MJ 04FB0Dxxxxxxxx = xxxxxxxx MCal 04FB0Exxxxxxxx = xxxxxxxx * 10 MCal 04FB0Fxxxxxxxx = xxxxxxxx * 100 MCal
Energy Tariff 2	8	INT32	840203xxxxxxxx = xxxxxxxx Wh
Energy Tariff 3	8	INT32	840303xxxxxxxx = xxxxxxxx Wh
Meter ID	6 bytes	According to M-Bus EN13757-3 identification field	Meter ID 0C78xxxxxxxx
Meter date/ time	6 bytes	INT32	Meter date and time (YY-MM-DD HH:MM) 046Dxxxxxxxx Bit 31-28 = Year-high* Bit 27-24 = Month Bit 23-21 = Year-low* Bit 20-16 = Day Bit 15 = Summertime flag** Bit 12-8 = Hour Bit 7 = Error flag*** Bit 6 = Reserved for future use*** Bit 5-0 = Minute *The year is read by combining the year-high and year-low field. For example, year-high = 0010 and year-low = 010 => year = 0010010 **0 = standard time, 1= daylight-saving time ***0 = timestamp is valid, 1 = timestamp is not valid

Table 18. Telegram 2 - Payload, message format Scheduled – Extended +

Field	Size	Data type	Description
Message format identifier	1 byte	-	0x3C (Scheduled-Extended +)

Field	Size	Data type	Description
Volume	6 bytes	INT32	Volume (m³) 0411xxxxxxxx = xxxxxxxx * 0.00001 m³ 0412xxxxxxxx = xxxxxxxx * 0.0001 m³ 0413xxxxxxxx = xxxxxxxx * 0.001 m³ 0414xxxxxxxx = xxxxxxxx * 0.01 m³ 0415xxxxxxxx = xxxxxxxx * 0.1 m³ 0416xxxxxxxx = xxxxxxxx m³ 0417xxxxxxxx = xxxxxxxx * 10 m³
Power	4 bytes	INT16	Power (W) 022Bxxxx = xxxx W 022Cxxxx = xxxx * 10 W 022Dxxxx = xxxx * 100 W 022Exxxx = xxxx kW 022Fxxxx = xxxx * 10 kW
Flow	4 bytes	INT16	Flow (m³/h) 023Bxxxx = xxxx * 0.001 m³/h 023Cxxxx = xxxx * 0.01 m³/h 023Dxxxx = xxxx * 0.1 m³/h 023Exxxx = xxxx m³/h 023Fxxxx = xxxx * 10 m³/h
Fw temp	4 bytes	INT16	Forward temperature (°C) 0258xxxx = xxxx * 0.001 °C 0259xxxx = xxxx * 0.01 °C 025Axxxx = xxxx * 0.1 °C 025Bxxxx = xxxx °C
Rt temp	4 bytes	INT16	Return temperature (°C) 025Cxxxx = xxxx * 0.001 °C 025Dxxxx = xxxx * 0.01 °C 025Exxxx = xxxx * 0.1 °C 025Fxxxx = xxxx °C
Meter ID	6 bytes	According to M-Bus EN13757-3 identification field	Meter ID 0C78xxxxxxxx

Field	Size	Data type	Description
Meter date/ time	6 bytes	INT32	Meter date and time (YY-MM-DD HH:MM) 046Dxxxxxxxx Bit 31-28 = Year-high* Bit 27-24 = Month Bit 23-21 = Year-low* Bit 20-16 = Day Bit 15 = Summertime flag** Bit 12-8 = Hour Bit 7 = Error flag*** Bit 6 = Reserved for future use*** Bit 5-0 = Minute *The year is read by combining the year-high and year-low field. For example, year-high = 0010 and year-low = 010 => year = 0010010 **0 = standard time, 1= daylight-saving time ***0 = timestamp is valid, 1 = timestamp is not valid
Info bits	7 bytes	INT32	Error and warning flags 04FD17xxxxxxxx For further information about Info bits please refer to the meter's manual

6.3.2.6. Pulse

Message format *Pulse* includes data from the pulse inputs In A and In B of the module. How the pulses should be interpreted can be configured in the meter interface. Depending on configuration, the pulses can represent either volume or energy. Due to size, the message format is divided in two telegrams.

The following table contains a detailed description of the payload of message format *Pulse*.

Table 19. Telegram 1 - Payload, message format Pulse [0x1C]

Field	Size (bytes)	Data type	Description
Message ID	1	UINT8	Always 0x1C
Date and time	6	INT32	Date and Time (M-Bus Type F) Example: 046Dxxxxxxxx
Meter ID	6	BCD8	According to M-Bus EN13757-3 identification field Example: 0C78xxxxxxxx
Energy	6-7	INT32	Example: 0406xxxxxxxx, 040Fxxxxxxxx
Volume	6	INT32	Example: 0413xxxxxxxx
Power	4	INT16	Example: 022Bxxxx
Flow	4	INT16	Example: 023Bxxxx
Fw temp	4	INT16	Example: 025Axxxx
Rt temp	4	INT16	Example: 025Exxxx

Table 20. Telegram 2 - Payload, message format Pulse [0x1D]

Field	Size (bytes)	Data type	Description
Message ID	1	UINT8	Always 0x1C
Date and time	6	INT32	Date and Time (M-Bus Type F) Example: 046Dxxxxxxxx
Meter ID	6	BCD8	According to M-Bus EN13757-3 identification field Example: 0C78xxxxxxxx
Pulse In A	7	INT32	Reads the registers corresponding to the In A connector on the module. Sub-unit 1 is used in DIFE for In A. Examples: Volume: 844014B1EB0100 = 1258,73 m^3 Energy: 84400725120000 = 46450 kWh
Pulse In B	8	INT32	Reads the registers corresponding to the In B connector on the module Sub-unit 2 is used in DIFE for In B Examples: Volume: 848040144E1E0100 = 732,94 m^3 Energy: 8480400601230000 = 8961 kWh
Operating hours	6	INT32	Reads the Operating Hours register of the meter. Examples: 042238220000 = 8 760h (~1 year) 042280230200 = 140 160h (~16 years)
Info codes	7	INT32	Error and warning flags. Example: 04FD17xxxx Note that this field is always 32 bits, even when using MultiCal 403 which only reports 16 bits.

6.3.2.7. Pulse Extended

Message format *Pulse Extended* is similar to message format Pulse and includes data from the pulse inputs In A and In B of the module. Besides other data points, this message format also include energy tariffs. How the pulses should be interpreted can be configured in the meter interface. Depending on configuration, the pulses can represent either volume or energy. Due to size, the message format is divided in two telegrams.

The following table contains a detailed description of the payload of message format *Pulse Extended*.

Table 21. Telegram 1 - Payload, message format Pulse [0x1C]

Field	Size (bytes)	Data type	Description
Message ID	1	UINT8	Always 0x1C
Date and time	6	INT32	Date and Time (M-Bus Type F) Example: 046Dxxxxxxxx
Meter ID	6	BCD8	According to M-Bus EN13757-3 identification field Example: 0C78xxxxxxxx
Energy	6-7	INT32	Example: 0406xxxxxxxx, 040Fxxxxxxxx
Volume	6	INT32	Example: 0413xxxxxxxx
Power	4	INT16	Example: 022Bxxxx
Fw temp	4	INT16	Example: 025Axxxx

Field	Size (bytes)	Data type	Description
Rt temp	4	INT16	Example: 025Exxxx
Info codes	7	INT32	Error and warning flags Example: 04FD17xxxx Note that this field is always 32 bits, even when using MultiCal 403 which only reports 16 bits.

Table 22. Telegram 2 - Payload, message format Pulse [0x1D]

Field	Size (bytes)	Data type	Description
Message ID	1	UINT8	Always 0x1C
Date and time	6	INT32	Date and Time (M-Bus Type F) Example: 046Dxxxxxxxx
Meter ID	6	BCD8	According to M-Bus EN13757-3 identification field Example: 0C78xxxxxxxx
Energy Tariff 2	7-8	INT32	842003xxxxxxxx
Energy Tariff 3	7-8	INT32	843003xxxxxxxx
Pulse In A	7	INT32	Reads the registers corresponding to the In A connector on the module. Sub-unit 1 is used in DIFE for In A. Examples: Volume: 844014B1EB0100 = 1258,73 m^3 Energy: 84400725120000 = 46450 kWh
Pulse In B	8	INT32	Reads the registers corresponding to the In B connector on the module Sub-unit 2 is used in DIFE for In B Examples: Volume: 848040144E1E0100 = 732,94 m^3 Energy: 8480400601230000 = 8961 kWh

7. Technical specifications

Mechanics	Value
Dimensions (w x h x d)	90 x 12 x 35 mm
Weight	33 g
Mounting	In module slot of Kamstrup MULTICAL® 403/603/803
External antenna connector	MCX

Electrical connections	Value
Supply voltage	Internal meter battery (up to 11 years lifetime, having EcoMode enabled, using Kamstrup's D-Cell meter battery).

Electrical characteristics	Value
Nominal voltage	3.0 VDC
Power consumption (max)	50 mA
Power consumption (sleep mode)	2.5 µA

Environmental specifications	Value
Operating temperature	+5 - +55 ºC
Operating humidity	0 - 93 % RH, no condensation
Operating altitude	2000 m
Pollution degree	Degree 1
Usage environment	Indoors
Storage temperature	-20 - 60 ºC

Radio characteristics	Value
Frequency	868 MHz
Output power	14 dBm
Receiver sensitivity	-135 dBm

LoRaWAN® characteristics	Value
Device class	Class A, bi-directional
LoRaWAN® version	1.0.2
Activation	OTAA or ABP
Data rate	DR0 - DR5 (250 bit/s-5470 bit/s)

User interface	Value
Push button	Start-up / reboot / switch off module
Configuration	NFC via Elvaco OTC app or downlink data

Approvals	Value
LoRa Alliance®	LoRaWAN Certified^{CM}
EMC	EN 301489-1, EN 301489-3

8. Simplified Declaration of Conformity

Hereby, Elvaco declares that CMi4140 is in compliance with the following directives:

EU	UK
2014/53/EU (RED)	2017 No. 1206 (RED)
2014/30/EU (EMC)	2016 No. 1091 (EMC)
2014/35/EU (LVD)	2016 No. 1101 (LVD)
2011/65/EU + 2015/863 (RoHS)	2012 No. 3032 (RoHS)

See EU Declaration of Conformity for a complete EU DoC.

See UK Declaration of Conformity for a complete UK DoC

9. Document history

Table 23. Versions

Version	Date	Description
0.1	2019-03	PoC version
0.2	2019-10	Evaluation samples version
1.0	2019-12	Commercial release version
1.1	2020-06	Commercial release v1.1
1.2	2021-05	Commercial release v1.2
1.3	2021-11	Commercial release v1.3
1.4	2023-12	Minor layout changes were made.
1.5	2024-09	Adaptation to release of FW 1.0.4. Added two new message formats, Pulse and Pulse Extended.

Manufacturer:

Elvaco AB / Kabelgatan 2T / 434 37 Kungsbacka / SWEDEN

info@elvaco.com

Support:

support.elvaco.com

support@elvaco.se