Ewon Flexy Base Units

INSTALLATION GUIDE

IG-0014-00 1.12 en-US ENGLISH

14 rue Edouard Petit
42000 St-Etienne

Tel : +33 477 92 03 56
Email : contact@rg2i.com
www.rg2i.com

Important User Information

Disclaimer

The information in this document is for informational purposes only. Please inform HMS Networks of any inaccuracies or omissions found in this document. HMS Networks disclaims any responsibility or liability for any errors that may appear in this document.
HMS Networks reserves the right to modify its products in line with its policy of continuous product development. The information in this document shall therefore not be construed as a commitment on the part of HMS Networks and is subject to change without notice. HMS Networks makes no commitment to update or keep current the information in this document.
The data, examples and illustrations found in this document are included for illustrative purposes and are only intended to help improve understanding of the functionality and handling of the product. In view of the wide range of possible applications of the product, and because of the many variables and requirements associated with any particular implementation, HMS Networks cannot assume responsibility or liability for actual use based on the data, examples or illustrations included in this document nor for any damages incurred during installation of the product. Those responsible for the use of the product must acquire sufficient knowledge in order to ensure that the product is used correctly in their specific application and that the application meets all performance and safety requirements including any applicable laws, regulations, codes and standards. Further, HMS Networks will under no circumstances assume liability or responsibility for any problems that may arise as a result from the use of undocumented features or functional side effects found outside the documented scope of the product. The effects caused by any direct or indirect use of such aspects of the product are undefined and may include e.g. compatibility issues and stability issues.

Copyright © 2023 HMS Networks

Table of Contents

Page

1 Preface ... 3

1.1 About This Document ... 3
1.2 Document history ... 3
1.3 Related Documents ... 3
1.4 Trademark Information ... 3

2 Product Summary ... 4

2.1 Introduction ... 4
2.2 Modular Concept of the Flexy ... 4
2.3 Features of the Flexy ... 6
2.4 General Specification of the Hardware Platform ... 6
2.5 Typical applications ... 6
2.6 Types & Part Numbers ... 7

3 Safety, Environmental & Regulatory Information ... 8

3.1 Scope ... 8
3.2 Power Supply ... 8
3.3 ESD Damage Prevention ... 8
3.4 Applicable Directives, Standards and Compliance ... 8
3.5 Reference Standards for Type Tests ... 9
3.6 Internal Battery ... 10
3.7 Field Implementation & Environmental Conditions ... 12

4 Base Unit Hardware Description ... 15

4.1 Base Unit Label ... 15
4.2 Mechanical Dimensions ... 16
4.3 Base Unit Interface ... 16

5 Extension Cards ... 22

5.1 Base Unit Slot Compatibility ... 22
5.2 Extension Card Insertion ... 23
5.3 Powering On the Flexy with its Extension Cards ... 24
5.4 Multiple Extension Cards ... 25
5.5 Extension Card Power Requirements ... 25

6 IP Address & Access to the Web Configuration ... 27

6.1 Factory Default IP Settings ... 27
6.2 Powering On ... 27
6.3 Connecting to the LAN IP Address ... 27
6.4 Web Interface ... 28

7 Resetting the Flexy 29

7.1 Normal Boot Sequence 29
7.2 First Level Reset (User Reset) 29
7.3 Second Level Reset (Factory Reset) 29
7.4 Reset Impact Matrix 30

A Connector Pinout & Related Specifications 31

A.1 Main Connector 31
A.2 Specification of the External Power Supply 31
A.3 Digital Output & Digital Inputs 32
A.4 Serial Interface (Flexy 102 & 202) 33
A.5 MPI Interface (Flexy 103 & 203) 34

B Flexy Products Overview 35

B.1 Base Unit 35
B.2 Extension Cards 35

C Flexy Isolation Scheme 38

C.1 Base Unit 38
C.2 Extension Cards 38

1 Preface

1.1 About This Document

This document describes the hardware of the Ewon Flexy base units and explains how to get started with the embedded web site. It also describes the basic software features needed to install the equipment.

For additional related documentation and file downloads, please visit www.ewon.biz/support.

1.2 Document history

Version	Date	Description
1.0	2015-03-06	First release
1.1	2015-05-11	Changed: Content / Label
1.2	2015-11-18	Changed: New template
1.3	2016-01-11	Changed: DO diagram
1.4	2016-07-27	Changed: Update of the Legal References
1.5	2016-09-05	Added: Energy points for FLB3402 and FLB3601
1.6	2017-05-22	Added: Appendix C Added: Appendix B.2 – FLB 3204
1.7	2017-08-31	Changed: New document template
1.8	2019-08-20	Changed: *Related Documents, p. 3* Changed: *Safety, Environmental & Regulatory Information, p. 8*
1.9	2020-01-02	Changed: *Digital Output & Digital Inputs, p. 32*
1.10	2020-09-15	Changed: *Features of the Flexy, p. 6*
1.11	2020-09-30	Changed: *Types & Part Numbers, p. 7*
1.12	2023-02-27	Removed: Chapter A.3.1 (info was related to Cosy devices):

1.3 Related Documents

Document	Author	Document ID
Easy Commissioning via SD Card & USB Drive	HMS	AUG-0062-00
eBuddy	HMS	AUG-0063-00
EUM Card - Extend Ewon User directory memory	HMS	AUG-0069-00
FLA 3301 - 2 Serial Ports Extension Card	HMS	IG-0016-00
FLX 3101 - Single Ethernet Extension Card	HMS	IG-0017-00
FLX 3401 - 8DI-4AI-2DO Extension Card	HMS	IG-0018-00
FLX 3402 - 8DI-4AI-2DO Extension Card	HMS	IG-0018-01
FLB 3202 - 3G GSM Extension card	HMS	IG-0019-00
FLB 3271 - Wi-Fi Extension Card	HMS	IG-0020-00
FLA 3501 - PSTN Extension Card	HMS	IG-0021-00
FLB 3204 - 4G (Europe) Extension card	HMS	IG-0026-00
FLB 3208 - 4 NA Extension Card	HMS	IG-0033-00
Reference Guide for Flexy Family	HMS	RG-0008-00

1.4 Trademark Information

Ewon® is a registered trademark of HMS Industrial Networks SA. All other trademarks mentioned in this document are the property of their respective holders.

2 Product Summary

2.1 Introduction

The Flexy is the first modular industrial M2M router available on the market.

It has been designed to fulfill the following key requirements:

- Flexible WAN, allowing within the same product to address different Internet connectivity technologies (Ethernet, Wi-Fi, 4G,…) and securing the investment in case of technology upgrade (eg. 3G > 4G).
- Flexible Field, providing easy connection to a wide range of external devices, including various field protocols.
- Flexible Apps, embedding alarms, data logging, remote access, routing and web HMI applications with mouse click based configuration but also customization offering openness and programming tools.

The Flexy is fully compatible with the Talk2M cloud connectivity services and with the eFive, a VPN server appliance, for real-time control application.

Fig. 1 Housing of the Flexy 201 Base Unit with its Original 4 Slot Fillers

2.2 Modular Concept of the Flexy

The Flexy family is a range of modular industrial gateway/router. As the name *Flexy* suggests, it has been designed to enable numerous different combinations by addition of extension cards.

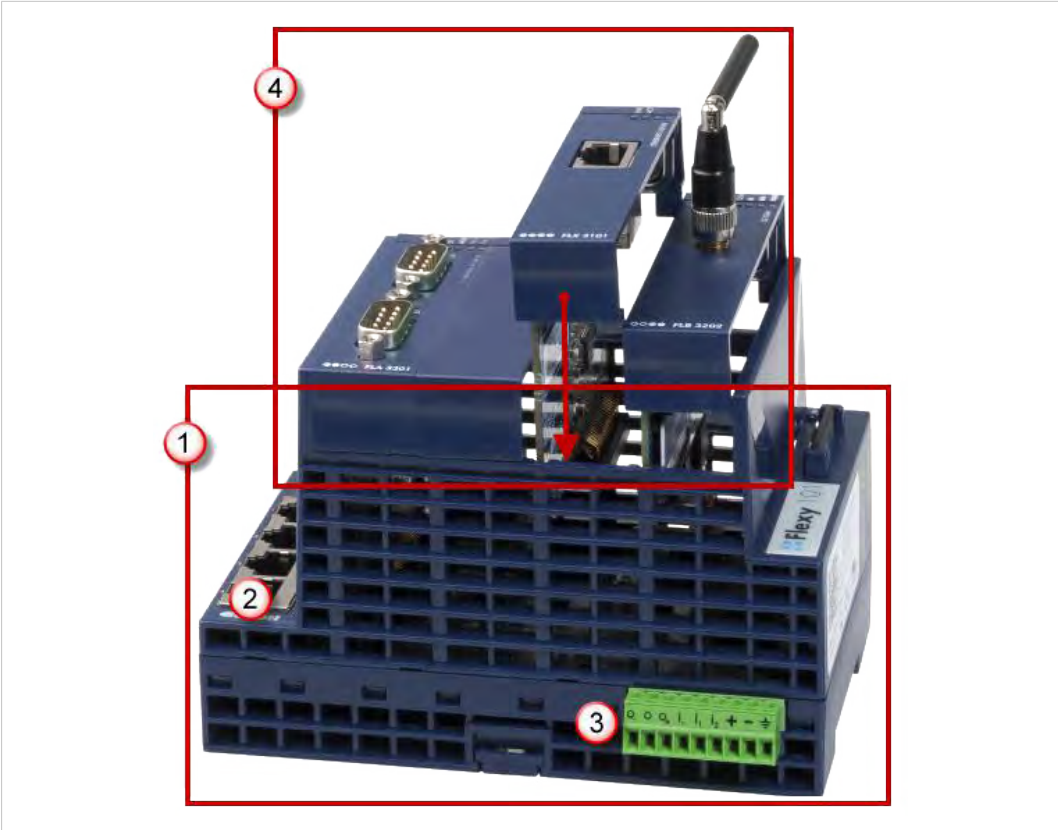

Fig. 2 Modular Concept of the Flexy

1	Base unit
2	Communication interface
3	Main connector including power input terminals (1 DO and 2 DIs)
4	Extension cards

2.2.1 Base Unit

The Flexy base units are available in 3 different versions (mother boards) depending on their communication interface:

Ethernet Switch	Flexy 10**1** & 20**1**
Serial & Ethernet	Flexy 10**2** & 20**2**
MPI & Ethernet	Flexy 10**3** & 20**3**

Each base unit features:

- 2 DIs and 1 DO.
- 4 free slots allowing the insertion of extension cards

Each base unit version is available as:

M2M Data Gateway	Flexy **1**0x (without WAN / LAN / serial routing)
M2M Router	Flexy **2**0x (full version)

See features matrix in *Features of the Flexy, p. 6*

2.2.2 Extension Cards

The extension cards fit inside all the different base unit versions and extend the communication features by adding either:

- a WAN communication interface (Ethernet WAN, wireless modem, ...)
- a field communication interface (serial, IO card, …)

How the extension cards should be integrated in the Ewon Flexy base units is explained in *Extension Cards, p. 22*.

2.3 Features of the Flexy

The following section lists the different main features supported by the Flexy.

	M2M Data Gateway (Flexy 10x)	M2M Router (Flexy 20x)
Open VPN	•	•
Talk2M connections	•	•
Data acquisition protocols (IO Servers)	•	•
Alarm management and notification	•	•
Data logging	•	•
BASIC scripting	•	•
JAVA ETK	•	•
Web server	•	•
ViewON 4 Web HMI	•	•
FTP client and server	•	•
HTTP(S) client (Get & Post requests)	•	•
Ethernet to Serial gateway		•
Routing between Ethernet interfaces (WAN to LAN)		•
Routing features: IP forwarding, NAT, Port forwarding		•

2.4 General Specification of the Hardware Platform

Characteristic	Value
Design	Industrial design (24 VDC power supply, DIN Rail mounting, extended temperature)
Processor	ARM9
Clock	Backed up real time clock (RTC) Backup battery has 10 years life expectancy
Ethernet Interface	4 LAN Ethernet ports 10/100 Mbps
Digital Input	2
Digital Output	1
Mounting	Latch for DIN rail EN50022-compliant

2.5 Typical applications

The Flexy is mostly used for

- Remote access of Ethernet, serial and MPI devices
- Industrial VPN router
- Remote metering and monitoring

2.6 Types & Part Numbers

Available Types

Routing capabilities	Communication Interface		
	4 Ethernet ports only	**1Ethernet port + 1 serial port**	**1 Ethernet port + 1 MPI port**
M2M Data Gateway	Flexy 101	Flexy 102	Flexy 103
M2M Router	Flexy 201	Flexy 202	Flexy 203

Available Part Numbers

Part Number	Type	Description
FLEXY10100_00MA	Flexy 101	M2M Data Gateway – 4 Ethernet ports
FLEXY10200_00MA	Flexy 102	M2M Data Gateway – 1 Ethernet port + 1 serial port
FLEXY10300_00MA	Flexy 103	M2M Data Gateway – 1 Ethernet port + 1 MPI port
FLEXY20100_00MA	Flexy 201	M2M Router – 4 Ethernet ports
FLEXY20200_00MA	Flexy 202	M2M Router – 1 Ethernet port + 1 serial port
FLEXY20300_00MA	Flexy 203	M2M Router – 1 Ethernet port + 1 MPI port

In the above table, the MA extension stands for "Multiple language A" (regrouping EN, FR, DE and IT). The part number syntax is explained in the *Base Unit Label, p. 15*.

3 Safety, Environmental & Regulatory Information

3.1 Scope

The present section addresses safety, environmental & regulatory information for the Ewon Flexy base units. They generally have a similar compliance frame but some aspects differ. For example, in the case of telecommunication extension cards, additional directives, standards and instructions apply.

3.2 Power Supply

The external power supply is a third party device that is not part of this certification.

The device shall be powered by an LPS power supply certified according to IEC/UL60950-1 or Class2 per NEC or by a 12-24Vdc 100w max. certified for 60°C and for altitudes up to 2000m for conformity to the UL/IEC 62368-1 (for more information, refer to *Specification of the External Power Supply, p. 31*).

3.3 ESD Damage Prevention

To avoid possible damage to the base unit and / or extension card, please wait 30 seconds after switching off the equipment before inserting (or removing) an extension card.

> **!** Always use ESD precautions when handling extension cards and / or opened base unit as they contain parts and assemblies susceptible to be damaged by electrostatic discharge (ESD).

The printed circuit boards (PCBs) of the Ewon Flexy base units described in the present document are partially exposed when slot fillers are removed to place extension cards. In order to avoid ESD damage, the product, when it is opened, must be handled with the necessary precaution including:

- Grounded ESD functional work surface
- Personal grounding
- Verification that the configuration is compatible with the firmware capabilities before being operated.
- Verification that the configuration complies with the energy point balance before operating (see *Energy Demand Points (Extension Cards), p. 26*).

The extension cards described in this document are modules exposing both sides of an electronic printed circuit board. Therefore, they are packed in anti static ESD bags. In order to avoid ESD damage, the product must be handled with the necessary precaution as described above.

3.4 Applicable Directives, Standards and Compliance

The Ewon Flexy base units belong to class A Information Technology Equipment (ITE). In a domestic environment, this product may cause radio interference in which case the user might have to take appropriate measures.

3.4.1 Conformity to European Directives

The Ewon Flexy base units and their extension cards are in conformity with the following EC directives:

- RoHS Directive 2011/65/EU

- EMC Directive 2014/30/EU
- RE Directive 2014/53/EU[1]

3.4.2 Applicable Safety Standards

The Ewon Flexy base units and their extension cards are in conformity with the following safety standards:

- UL 60950-1
- CSA-C22.2 No 60950-1-07
- EN IEC 62368-1:2020 + A11:2020
- UL 62368-1 Third Edition
- CAN/CSA C22.2 No. 62368-1: 19 Third Edition

3.4.3 FCC Compliance

The Ewon Flexy base units and their extension cards comply with Part 15 of the FCC Rules.

Operating is subject to the following two conditions:

- This device may not cause harmful interference
- This device must accept any interference received, including interference that may cause undesired operation.

3.4.4 Certifications

The Ewon Flexy base units and their extension cards have been duly certified by authorized bodies:

- UL Certificate of Compliance (COC) # 20190529_E350576
- CB certificate # DK-133387-UL

These certificates can be downloaded on www.ewon.biz/support

3.5 Reference Standards for Type Tests

The Ewon Flexy base units and their extension cards have been fully validated on temperature, vibration and shock against the requirements of the following standards:

Operating & Storage Temperature	
Test nature	**Reference Standard**
Cold test	IEC 60068-2-1
Dry heat test	IEC 60068-2-2
Temperatur change test	IEC 60068-2-14
Cyclic damp heat test	IEC 60068-2-30

1. When applicable, the product conforms to the corresponding RE Directive articles: RF spectrum efficiency: Art 3(2); EMC: Art. 3 (1)(b); Safety: Art. (3)(1)(a)

Vibration & Shock Tests	
Test nature	**Reference Standard**
Programmable controllers test	IEC 61131-2
Vibration test (sinusoidal)	IEC 60068-2-6
Vibration test (broad-band random)	IEC 60068-2-64
Shock test	IEC60068-2-27

3.6 Internal Battery

3.6.1 Purpose and Reference

The Ewon Flexy base units contains a CR2032 battery. This battery is used to maintain the real time clock up-to-date even when the unit is not powered.

Here is a list of risks and recommendations regarding the battery:

- Risk of explosion if the battery is replaced by an incorrect type. The battery is not intended to be replaced by the consumer: the product shall be returned to the manufacturer for replacement.
- Do not ingest battery, chemical burn hazard.
- Keep new and used batteries away from children.
- If the cell battery is swallowed, it can cause several internal burns in just 2 hours and can lead to death.
- If the equipment's enclosure do not close securely, stop using the product and keep it away from children.
- If you think batteries might have been swallowed or placed inside any part of the body, seek immediate medical attention.

Please do not use any other battery than the following one, delivered by HMS Industrial Networks SA:

- Replacement CR2032 Battery
- Flexy part number: FAC90101_0000.

3.6.2 Battery Replacement Procedure

> **!** There is a risk of explosion if the battery is replaced by an incorrect type.

Before starting, make sure the necessary precautions to avoid ESD damage (see *ESD Damage Prevention, p. 8*) have been taken.

Be aware that insulated tweezers (e.g from manufacturer EREM model 249 SA, see below) are needed to be able to handle the battery without short-circuiting it.
The RTC battery is located on the mother board in the alignment of slot 3 starting from the left as the Ewon logo is on the right side.

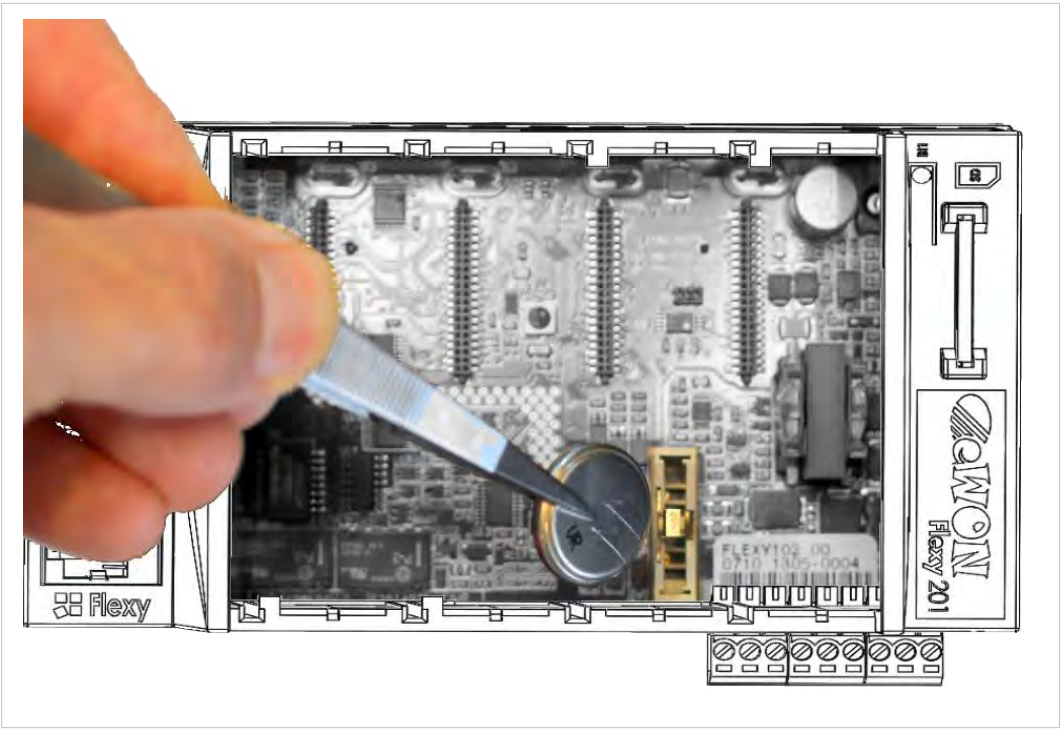

Fig. 3 Battery Replacement

Here's the procedure to replace the battery:

1. Power the unit off and wait 30 seconds before continuing the procedure.
2. For a practical access, it is recommended to remove all slot fillers and / or extension cards.
3. Carefully remove the battery from its holder and put the new one in place.
4. Check that the locking tab is correctly placed on top of the battery.

> **!** Do not dismantle, crush, puncture the battery or attempt to open the service battery as this can lead to severe injuries.

> **!** Do not dispose of batteries in fire or with household waste but according to instructions. Consider the environment, check the battery recycling services available in your region.

3.7 Field Implementation & Environmental Conditions

3.7.1 Ingress Protection

The Ewon Flexy base units have an IP20 protection grade. Therefore, the Ewon Flexy base units are NOT suited for outdoor mounting.

They have to be integrated in an electrical cabinet, protected from excessive heat, humidity and dust. Do not push any sharp object into the air vents or openings of the equipment.

3.7.2 Mounting Recommendations

The normal mounting position of the Flexy is to be mounted on a horizontal Omega type DIN-rail (EN 50022).

To ensure a proper ventilation of the equipment, a free gap of at least 2 cm must be respected in front of all ventilation openings of the unit.

> **!** In any other mounting position than the one explained here under, the specified temperature has to be derated to -25°C to +40°C.

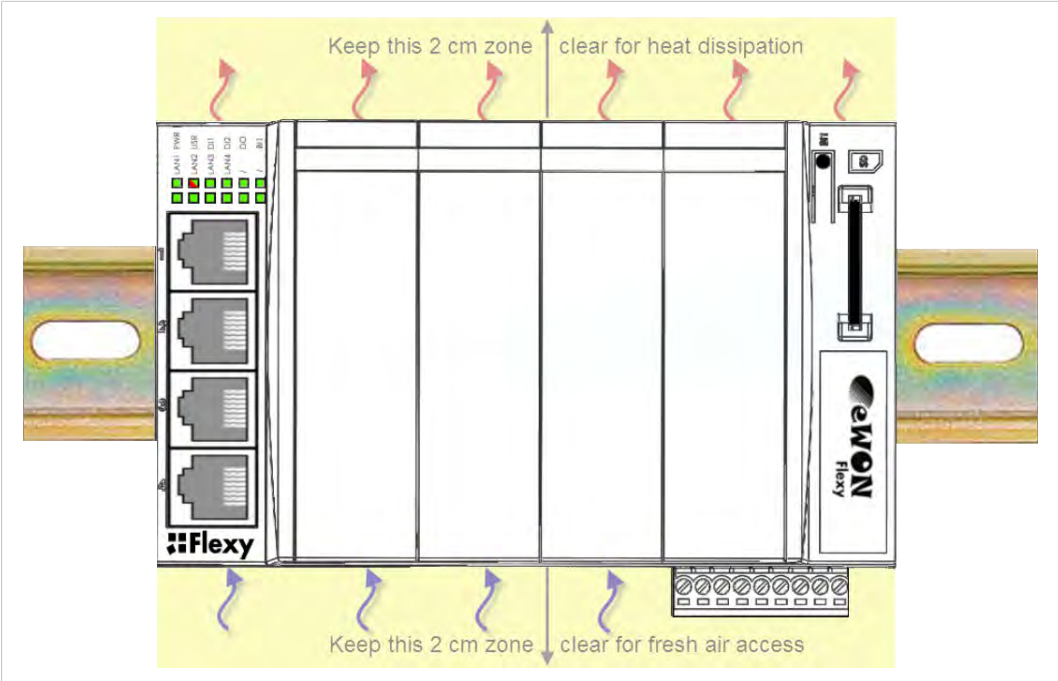

Fig. 4 **Flexy Heat Ventilation**

Here is the process how to mount / remove a unit from a DIN-rail:

- **Mounting the unit on DIN-rail**
  Present the unit in front of the DIN rail and tilt it upwards in order to hang it on the upper edge of the DIN rail by the hooks at the rear. Gently tilt the unit downwards until the slide lock snaps. The slide lock is located in the middle at the bottom of the unit (see *Mechanical Dimensions, p. 16*).
- **Removing the unit from DIN-rail**
  Insert a medium size screwdriver in the small slot of the slide lock located in the middle at the bottom of the unit. Release the unit by pulling the slide lock downwards while gently tilting the unit upwards. Free the unit by unhooking it from the upper rail edge (see *Mechanical Dimensions, p. 16*).

3.7.3 Earthing

Earthing the Flexy is necessary to eliminate unwanted transients (lightning protection) and to conform to the EMC requirements.

Therefore, a functional earth (FE) terminal is available on the main connector as shown in *Main Connector, p. 31*. Connect this terminal directly to a low impedance ground. Shielded cables have to be used for Ethernet and serial connectivity to comply with the EMC requirements.

A scheme of the Flexy isolation is available in *Flexy Isolation Scheme, p. 38*.

3.7.4 Environmental Limits

The equipment will operate properly within the following environmental limits provided it is mounted according to *Mounting Recommendations, p. 12*.

Characteristic	Value
Operating temperature	-25° to +60°C
Storage temperature	-40° to +70°C
Relative humidity	10 to 95% non-condensing
Operating altitude	Up to maximum 2000m
Storage altitude	Up to maximum 3000m
Mounting	Latch for DIN rail EN50022-compliant

3.7.5 Labelling Information

The OEM User Manual (for integrators) must provide clear instructions, to the OEM, explaining the labeling requirements, options and OEM User Manual instructions that are required.

The host OEM User Manuel (Ewon's manual) must contain clear instructions on how end users can find and/or access the module and the FCC ID

4 Base Unit Hardware Description

4.1 Base Unit Label

The identification label of the Ewon Flexy base units is placed on the right hand side of the housing. The different parts of the label are described below:

Label	Definition
PN	Part Number (see syntax in *Syntax of the Part Number, p. 15*)
SN	Serial Number YYWW-SSSS-PP YY = 2 last digits of production year WW = production week number SSSS = Sequential production number PP = Product Code
MAC	MAC address of the Ethernet adapter
Rating	Power supply requirements
Marks	CE, UL,... logos if applicable

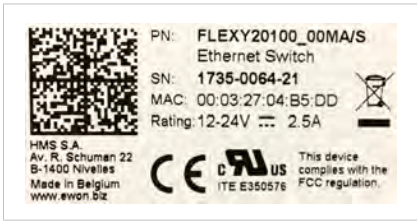

Fig. 5 Flexy 201 Label

Syntax of the Part Number			
FLEXY12233_44AA/BB			
Position(s)	**Description**	**Acceptable values**	
FLEXY	Name of the Ewon device model	Only Flexy (constant)	
1	Single figure Defines routing capabilities	1	M2M Data Gateway
		2	M2M Router
22	Two figures Defines the type of the motherboard	01	4 Ethernet ports
		02	1 Ethernet port & 1 Serial port
		03	1 Ethernet port & 1 MPI port
33	Two figures Defines the primary software option	00	No primary software option
44	Two figures Defines the secondary software option	00	No secondary software option
AA	Two capital letters Defines the firmware language	MA	EN + FR + DE + IT
/BB	Two capital letters Defines the model type	S	Compliance with UL / IEC / EN 60950 Standard
		H	Compliance with Hazardous Location (C1D2)

Marks	
Marks	**Description**
CE	Conformité Européenne or European Conformity (EC)
c UL us	UL Recognized - Underwriters Laboraties

4.2 Mechanical Dimensions

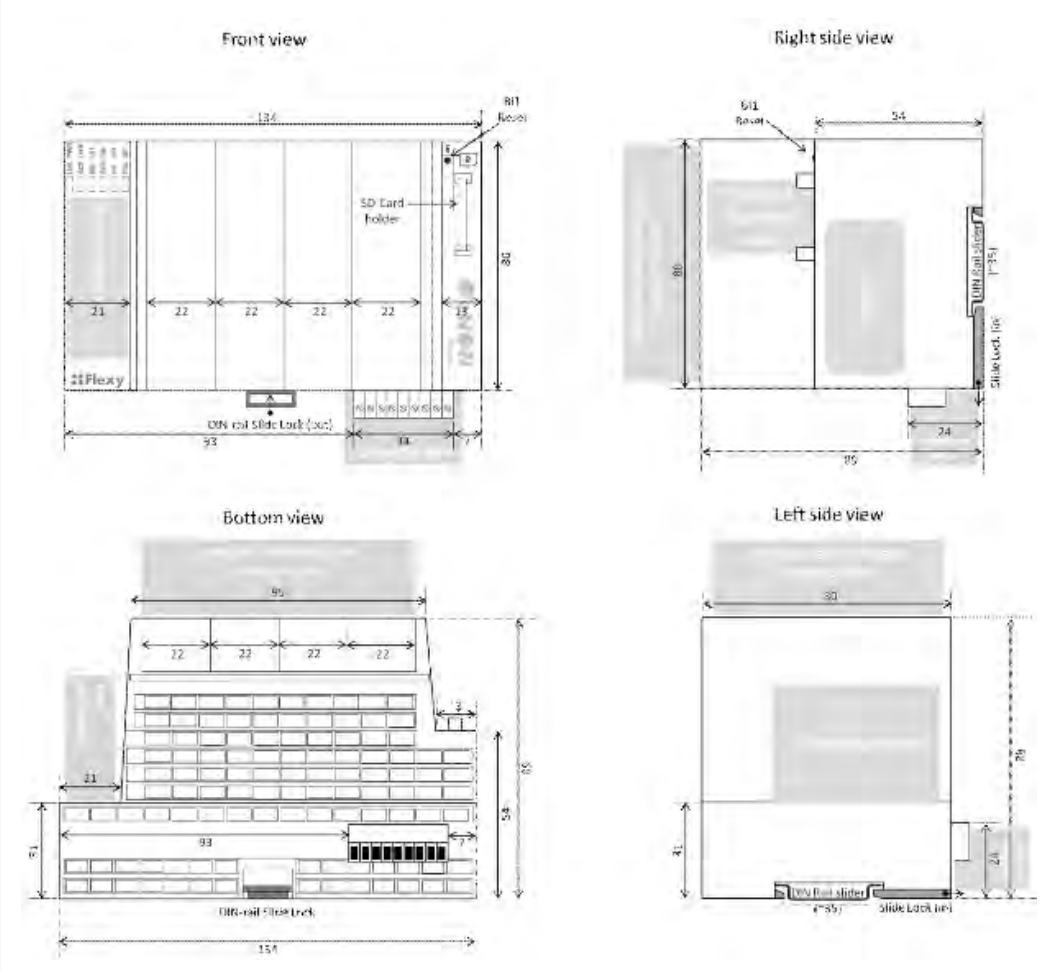

Fig. 6 Mechanical Dimensions

In the above picture:

- **Unit**: Dimensions are in millimeters (mm).
- **Accuracy**: Suited only for implementation drawings (rounded @ full mm).

Shaded areas show provisions of empty space that should be considered in the implementation arrangement.

The provision of empty space in front of the slot fillers is spared for the connectors of extension cards. Even if the application requires no extension card(s), it is good practice to plan the free space anyhow, in case an extension card is inserted later on.

4.3 Base Unit Interface

This section addresses the interface that represents the Ewon Flexy base units. The items numbered in the image below are explained subsequently in separate paragraphs.

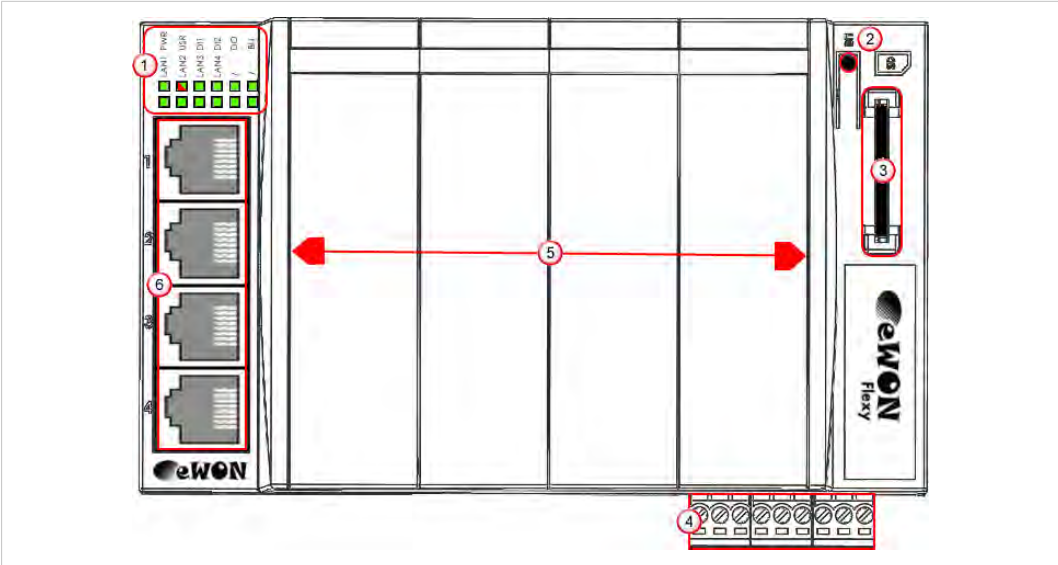

Fig. 7 Base Unit Interface

1	LED panel
2	RESET button - BI1
3	SD card slot
4	Main connector Used to connect the power supply and the digital I/O
5	4 slots fillers Can be removed and replaced by extension cards
6	Main board communication interfaces Depends on the base unit type (in the above picture: 4 Ethernet Ports)

4.3.1 LED Panel

The LED panel displays the system status and is located opposite the Ewon logo. The following table explains the common LEDs of all base units.

Label	Definition
PWR	Power Steady green = unit is powered on
USR	User Blinking green slowly = Unit is ok Red pattern = special attention required
DI1	Digital IN 1 Green = ON : Signal on Input 1 detected
DI2	Digital IN 2 Green = ON : Signal on Input 2 detected
DO	Digital output Green = ON : Signal on Output detected
BI1	Button BI1 input Steady green = reset button is being pressed

Specific LEDs of each base unit model are addressed in distinct chapters.

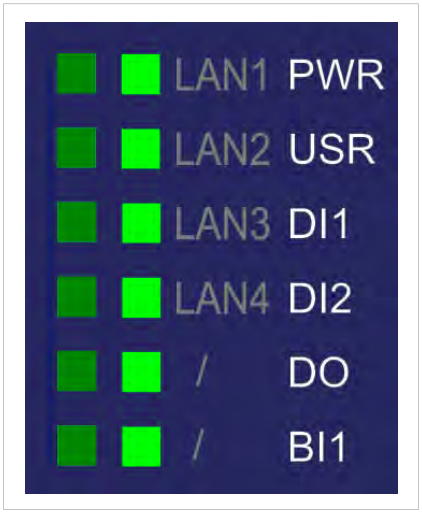

Fig. 8 LED Panel Example of a Flexy

4.3.2 Reset Button

The reset button allows the reset of the Flexy partially (Reset Level 1) or completely (Reset Level 2). For the reset procedures check *Resetting the Flexy, p. 29*.

4.3.3 SD Card Slot

The SD card can be used for two purposes:

- Easy Commissioning: Configure a Flexy and perform actions such as a firmware upgrade / downgrade, recovery, restore a backup, Talk2M account integration, ...
- Extended User Memory: Named as the EUM card, it increases the user memory capacity of the Flexy.

For more information on each of those possibilities, easy commissioning or EUM, please refer to the *Related Documents, p. 3*.

4.3.4 Main Connector

The Flexy is powered via its main connector using a male connector (a mating female connector with screw terminals is delivered with the Ewon Flexy base units).

For details see *Main Connector, p. 31*.

4.3.5 Four Slots for Extensions

The slot fillers can be removed to add extension cards. A general overview of the available extension cards is available in the *Extension Cards, p. 35*.

It is recommended to never leave a slot empty. Either a slot filler or an extension card should always be inserted in the Flexy.

4.3.6 Specific Interface

4 Ethernet Ports Model (Flexy 101 & 201)

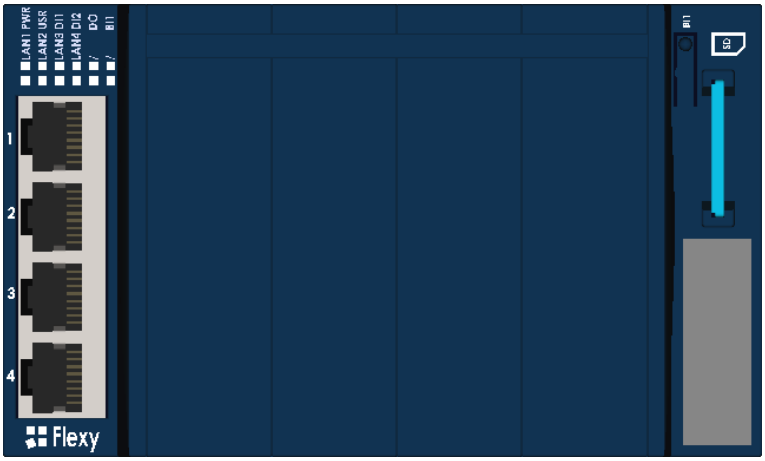

Fig. 9 Interface of the Flexy 101 & 201

The LAN interface consists of a 4 auto-sense Ethernet ports (10/100 Mbps). Auto-sense means that both UTP Class 5 direct and crossed cables with RJ45 terminations at both ends can be used. Default parameters see *Factory Default IP Settings, p. 27*.

However, the minimum required regarding the Ethernet cable type is Cat.5 with RJ45 connectors.

LED Interface

Label	Definition
LAN1	Ethernet activity on port 1 Green steady = Ethernet link OK Green flashing = Ethernet traffic (Rx and Tx)
LAN2	Ethernet activity on port 2 (same as above)
LAN3	Ethernet activity on port 3 (same as above)
LAN4	Ethernet activity on port 4 (same as above)

Fig. 10 LED Panel of the Flexy 101 & 201

Serial Port Model (Flexy 102 & 202)

Fig. 11 Interface of the Flexy 102 & 202

The above picture shows:

- 1 x RJ45 ports switch LAN Ethernet 10/100.
- SubD 9 male RS232/422/485 port
  1500V functional galvanic isolation through the power supply isolation from ground.

LAN Port

The LAN interface consists of one auto-sense Ethernet port (10/100 Mbps). Auto-sense means that both UTP Class 5 direct and crossed cables with RJ45 terminations at both ends can be used. Default parameters see *Factory Default IP Settings, p. 27*.

However, the minimum required regarding the Ethernet cable type is Cat.5 with RJ45 connectors.

Serial Port

The configuration of the physical serial mode is done through the device web interface. Possible configurations are RS232, RS422 and RS485. There is no dip switch settings required.

LED Interface

Label	Definition
LNK	Ethernet link Green steady = Ethernet link OK
ACT	Ethernet activity Green flashing = Ethernet traffic (Rx & Tx)
232	RS232 mode Green steady = port configured in RS232 mode
SER	Green flashing = RX/TX traffic on serial port
HD	Half duplex Green steady = configured in RS485 mode
POL	Polarization resistors Green steady = Polarization and termination ON

Fig. 12 LED Panel of the Flexy 102 & 202

MPI Port Model (Flexy 103 & 203)

Fig. 13 Interface of the Flexy 103 & 203

The above picture shows:

- 1 x RJ45 ports switch LAN Ethernet 10/100.
- SubD 9 female MPI-port
  1500V functional galvanic isolation through the power supply isolation from ground.

LAN Port

The LAN interface consists of one auto-sense Ethernet port (10/100 Mbps). Auto-sense means that both UTP Class 5 direct and crossed cables with RJ45 terminations at both ends can be used. Default parameters see *Factory Default IP Settings, p. 27*.

However, the minimum required regarding the Ethernet cable type is Cat.5 with RJ45 connectors.

MPI Port

The MPI - Profibus port allows the connection to an MPI or Profibus network. No further hardware configuration is required.

LED Interface

Label	Definition
LNK	Ethernet link Green steady = Ethernet link OK
ACT	Ethernet activity Green flashing = Ethernet traffic (Rx & Tx)
MPI	MPI status Green flashing = TX activity on the MPI port
MTK	MPI token Green steady = Hold Token in MPI operation mode

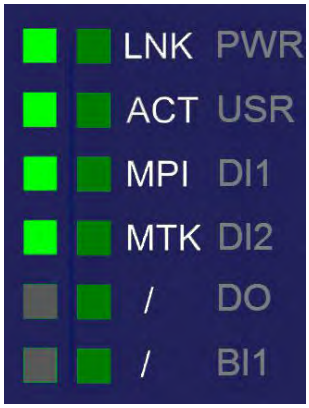

Fig. 14 LED Panel of the Flexy 103 & 203

5 Extension Cards

5.1 Base Unit Slot Compatibility

The Ewon Flexy base units feature two type of slots :

- The type-A slots are the two first slots starting from the left
- The type-B slots are the two last slots

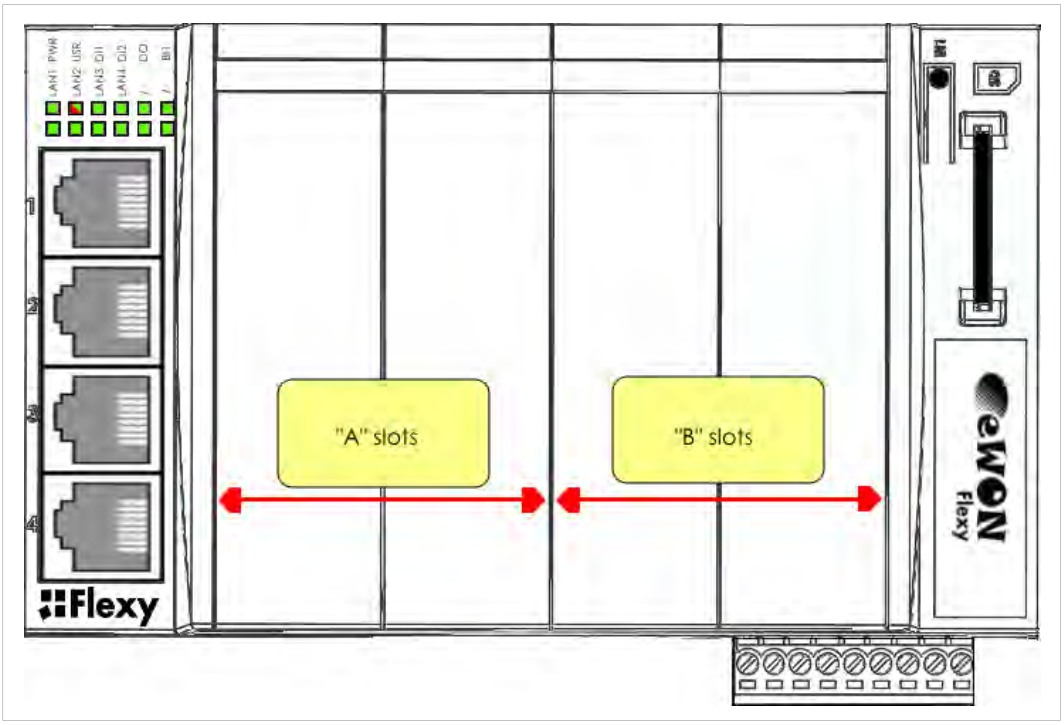

Fig. 15 Flexy Slot Compatibility

Some cards fit in both type-A and type-B slots. Others don't. Cards that fit in only one type of slot have a mechanical Poka-Yoke security.

The reference code of the Flexy extension cards includes a letter that defines their compatibility either with “A” slots, “B” slots or both.

- FL**A** xxxx - designates cards that fit into “A” slots
- FL**B** xxxx - designates cards that fit into “B” slots
- FL**X** xxxx - designates cards that fit into both “A” and “B” slots

In addition to the card reference, each type of extension card bears a visual compatibility symbol on its front panel.

Fig. 16 Slot Compatibility Markings

Indication	Design	Location
1	●●○○	2 first slots only - Type-A
2	●●●●	Any slot - Type-X
3	○○●●	2 last slots only - Type-B

5.2 Extension Card Insertion

> **!** Wait 30 seconds after turning off the equipment before inserting (or removing) an extension card in order to avoid possible damage to the Ewon Flexy base units and the extension cards.

Remove the slot filler of the location the new card will be inserted. To do this, press on both ends of the cover, note that the hooks are off-centered.

Insert the extension card carefully and slide it down until the hook clicks. Make sure the card is completely inserted. **DO NOT insist** if a resistance is felt when trying to insert the card, it probably means the extension card is being placed in a wrong slot. In such case, check slot compatibility of the relevant extension card. Refer to *Base Unit Slot Compatibility, p. 22*.

Fig. 17 Slot Removal

1	Hooks to be pressed are off-centered – press while pulling upwards
2	This metal tag soldered on the PCB acts as mistake-proof security (mating stop in housing)

In the situation where an extension card has been inadvertently forced in a wrong slot, the Flexy will detect it and will NOT complete its BOOT sequence. Therefore, the unit will not be accessible through its LAN interface. The slot error is returned by the USR LED: red on for 1 sec, off for 0.5 sec).

Boot the unit so it can detect the inserted extension cards. As explained in *Detected Cards Displayed in the System Page, p. 28*, the web interface of the Flexy has a diagnostic page showing the extension cards in their order of detection (from left to right).

5.3 Powering On the Flexy with its Extension Cards

The normal boot sequence of the Flexy takes approximately 25 seconds to complete. During this process, all LEDs of the left row go ON for a while, except ***BI1*** as long as the RESET button is not pressed.

If the RESET button was pressed, the ***USR*** LED will be orange for a little time.

As soon as the boot process is finished and the unit is ready to be used, the ***USR*** LED blinks green slowly.

The extension card types are detected slot per slot during the boot sequence and are automatically installed from a system standpoint. If an extension card was inserted in a wrong slot, the boot sequence is interrupted and the ***USR*** LED is flashing RED 1x short 3x long and communication through the Ethernet port is no longer possible.

5.4 Multiple Extension Cards

5.4.1 Detection Order

The boot sequence of the Flexy includes an automated detection of the inserted extension cards. This detection is done sequentially, slot per slot starting from left to right (when holding the Flexy with its logo on the right side).

5.4.2 Software Compatibility of Multiple Cards Combination

The Ewon Flexy base units allow to insert multiple extension cards of the same type. Some configurations including multiple extension cards, even if mechanically acceptable, are not supported by the embedded software. Cards in excess are ignored during the automated detection process which means that the base unit and its running extension cards will operate normally.

The ignored card(s) will appear in the **Diagnostic** > **Status** > **Info** > **System** but they will not be functional.

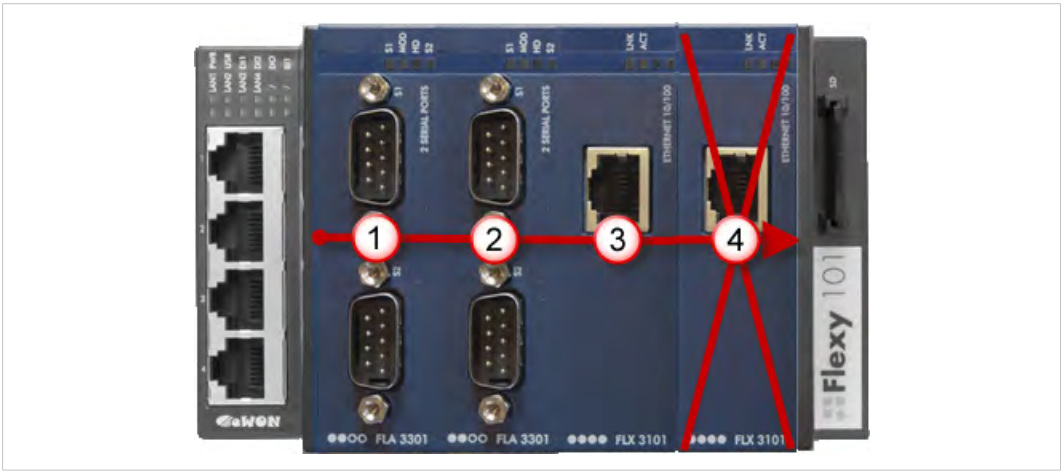

Fig. 18 Order of the Extension Cards

The picture above shows an example of a configuration that would be OK mechanically and power wise but would not be supported by the firmware.

During the boot process, the first 2 serial port extension cards (1 & 2) are detected and can be used then the 2 single Ethernet cards (3 & 4) are also detected. The second single Ethernet card (4) is not supported by the firmware and so it cannot be used. The presence of this “ignored”card in the base unit does not alter the operation of the base unit itself nor does it alter its “accepted” extension cards.

5.5 Extension Card Power Requirements

The internal power converter of the Ewon Flexy base units has been thought to cover a broad range of different combinations of extension cards. Users should make sure the total power demand of the extension cards does not exceed the capabilities of the base unit. That is why the notion of “energy points” has been introduced.

5.5.1 Available Energy Points (Base Unit)

Each base unit type has a certain amount of available energy points.

These available energy points depend on the temperature range in which the equipment will be used. Considering the fact very few applications require the equipment to actually work between 50° and 70°C, the available energy points per base unit type are specified for both up to 50°C max. and up to 70°C max.:

Available Energy Points per Base Unit Type

	Ethernet Flexy 101 & 201	**Serial Flexy 102 & 202**	**MPI Flexy 103 & 203**
Available energy points (max. 50°C)	29	30	31
Available energy points (max. 70°C)	20	21	22

5.5.2 Energy Demand Points (Extension Cards)

Each extension card requires a certain amount of energy demand points.

These energy demand points per extension card type are specified in the table of *Extension Cards, p. 35*.

Example of Energy Demand Points

	2 serial ports FLA 3301	**Single Ethernet FLX 3101**	**3G GSM FLB 3202**
Energy demande points	1	1	10

5.5.3 Power Balance Check Example

Considering the configuration shown in the second picture of *Base Unit Slot Compatibility, p. 22*.

	Energy points (max. 50°C)	**Energy points (max. 70°C)**
Available energy points for base unit: Flexy 201	29	20
Energy demand for 2 serial ports card: FLA 3301	1	1
Energy demand for single Ethernet card: FLX 3101	1	1
Energy demand for 3G GSM card: FLB 3202	10	10
Energy Balance	17	8

Both results are higher than 0 which means that this combination works.

6 IP Address & Access to the Web Configuration

6.1 Factory Default IP Settings

Characteristics	Values
LAN IP address	10.0.0.53
LAN subnet mask	255.255.255.0
Gateway	0.0.0.0

Since firmware version 10, the WAN IP address is set by default in DHCP mode.

6.2 Powering On

Power the unit on and wait approximately 25 seconds until the boot process is completed.

After a successful boot process the ***USR*** LED is blinking green slowly.

If the ***USR*** LED is blinking red according to a given pattern, it indicates an interruption of the boot process due to a problem. The most frequent issues are:

- an extension card is inserted in a wrong slot: ***USR*** LED blinking pattern is red 1x short, 3x long
- a duplicate IP address was detected on the LAN network: ***USR*** LED blinking pattern is red 1x short, 1x long

For other LED patterns in case of error, please refer to the RG-0001-00: General Reference Guide.

6.3 Connecting to the LAN IP Address

Establish the first communication with the Flexy by using Ewon companion tool ***eBuddy*** which can be downloaded from www.ewon.biz/support.

Connect one of the LAN ports of the Flexy to the computer point-to-point or through a network provided the default IP address of the Flexy will not conflict with another connected device.

Start the eBuddy application. The application scans through the Ethernet adapter network and retrieves the connected Ewon devices displaying the IP address, subnet mask and serial number.

The utility also allows the modification of the default IP address without being necessarily in the same network range. To do so, follow this process:

1. Start the eBuddy utility
2. *Optional: Highlight the row representing the device which IP address needs to be modified*
3. Click on the button “Set IP” from the top bar menu or hit F2 keyboard shortcut
4. If step 2 has been fulfilled, the serial number of the selected device appears in the new popup. If not, indicate the serial number of the device that needs to be modified. Click Next
5. Indicate the new IP address and its subnet mask. By clicking Next, eBuddy sends the command to the device to change its IP address and to reboot
6. Wait until the reboot has ended to reach the Flexy on its new IP address

Web Interface Flexy 10x Base Units

While the computer is connected to a LAN port of the Ewon® Flexy 10x, open an Internet browser and reach the Ewon® Flexy 10x web server which URL is the LAN IP address of the Ewon® Flexy 10x (default is 10.0.0.53).

Another way to access the web panel of the Ewon® Flexy 10x is by using Ebuddy with its EZ DHCP feature.

For more info, refer to the AUG-0063-00 - Ebuddy.

Before beginning the configuration of the Ewon® Flexy 10x, an authentication is required.

WARNING

For Ewon® Flexy 10x devices produced after **10th of September 2024** and starting from the **serial number 2436-0001-20**, default login is "*adm*" and password is the unique password you can find on the label sticker on the right side of the device.

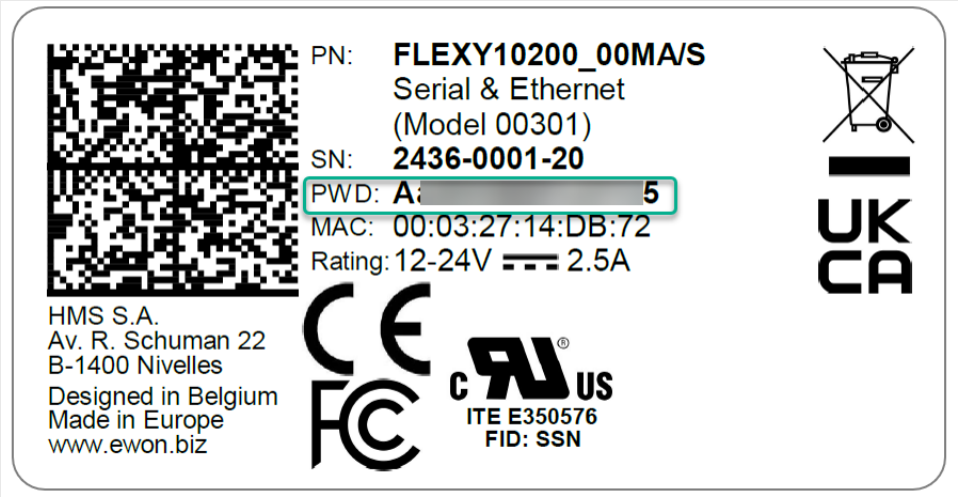

CAUTION

If you **downgrade** a Ewon® Flexy 10x device running under the **firmware 14.9s3,** to an older firmware version, the **old password policy will be applied**, which means that default login and password will be both *adm*.

IMPORTANT

For Ewon® Flexy 10x devices produced before the **10th of September 2024** or before the **serial number 2436-0001-20**, default login and password are both *adm*. For security reasons, default password must be modified.

To change the password, go to **Setup** > **Users** and double click on the *adm* entry to edit its parameters. Enter the new password twice and click **Save**.

At the very first boot of the Ewon® Flexy 10x or after a reset level 2 and after successfully logging in, an interface language selection will be proposed.

A configuration wizard will be proposed afterwards which sets the configuration of the Ewon® Flexy 10x but also the connection to the Talk2m environment.

On Ewon website, a Quick Start Guide can be found which helps in the configuration of the Ewon® Flexy 10x.

Web Interface Flexy 20x Base Unit

While the computer is connected to a LAN port of the Ewon® Flexy 20x, open an Internet browser and reach the Ewon® Flexy 20x web server which URL is the LAN IP address of the Ewon® Flexy 20x (default is 10.0.0.53).

Another way to access the web panel of the Ewon® Flexy 20x is by using Ebuddy with its EZ DHCP feature.

For more info, refer to the AUG-0063-00 - Ebuddy.

Before beginning the configuration of the Ewon® Flexy 20x, an authentication is required.

WARNING

For Ewon® Flexy 20x devices produced after **10th of September 2024** and starting from the **serial number 2436-0003-21**, default login is "*adm*" and password is the unique password you can find on the label sticker on the right side of the device.

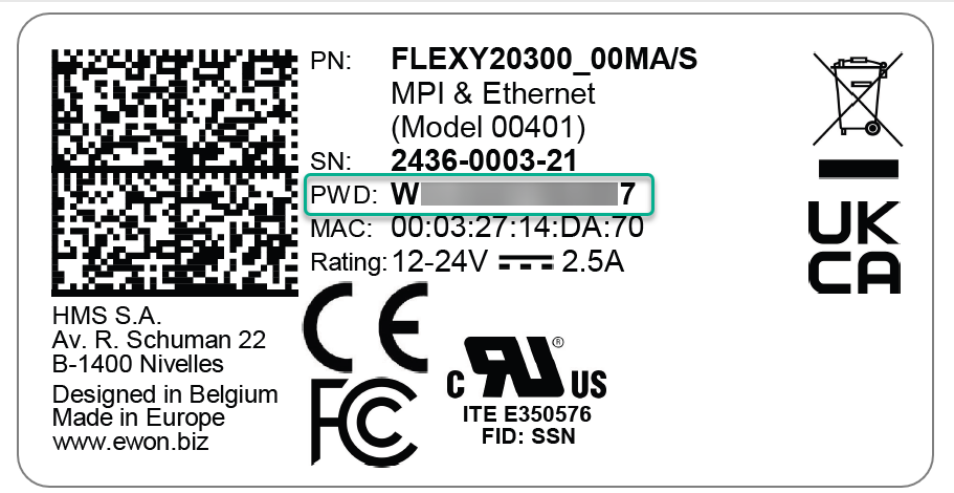

CAUTION

If you **downgrade** a Ewon® Flexy 20x device running under the **firmware 14.9s3,** to an older firmware version, the **old password policy will be applied**, which means that default login and password will be both *adm*.

IMPORTANT

For Ewon® Flexy 20x devices produced before the **10th of September 2024** or before the **serial number 2436-0003-21**, default login and password are both *adm*. For security reasons, default password must be modified.

To change the password, go to **Setup** > **Users** and double click on the *adm* entry to edit its parameters. Enter the new password twice and click **Save**.

At the very first boot of the Ewon® Flexy 20x or after a reset level 2 and after successfully logging in, an interface language selection will be proposed.

A configuration wizard will be proposed afterwards which sets the configuration of the Ewon® Flexy 20x but also the connection to the Talk2m environment.

On Ewon website, a Quick Start Guide can be found which helps in the configuration of the Ewon® Flexy 20x.

6.4.1 Detected Cards Displayed in the System Page

The ***System*** page allows to check the status of the system including detected extension cards.

To access the system status summary, click on ***Diagnostic*** > ***Status*** > **System Info** > **System**.

7 Resetting the Flexy

The reset button ***BI1*** is located on the right side of the Ewon Flexy base units (see *Reset Button, p. 17*). The reset function of this button is active only if pressed while powering on. The Flexy features two type of reset levels. A table with the impacted configuration zones per reset level can be found in *Reset Impact Matrix, p. 30*.

7.1 Normal Boot Sequence

The normal boot sequence of the Flexy takes approximately 25 seconds to complete. During this process, all LEDs of the left row go ON for a while, except ***BI1*** as long as the RESET button is not pressed.

If the RESET button was pressed, the ***USR*** LED will be orange for a little time.

As soon as the boot process is finished and the unit is ready to be used, the ***USR*** LED blinks green slowly.

7.2 First Level Reset (User Reset)

The first level reset consists in formatting only the "***user files***" part of the non volatile memory. This type of reset does not modify the communication parameters of the Flexy.

How to generate a first level reset:

1. Power the unit OFF and ON again
2. **Immediately press and maintain** the reset button. The LED labeled ***BI1*** turns ON
3. Wait approximately 30 seconds until the ***USR*** LED blinks red 1x per second
4. Immediately release the button. The LED labeled ***BI1*** turns OFF. If the button keeps being pressed at this point, the second level reset will be engaged
5. Wait approximately 30 seconds until the reset procedure is completed.
6. The Flexy restarts automatically and the unit is ready to be used, the ***USR*** LED blinks green slowly.

7.3 Second Level Reset (Factory Reset)

This second level reset formats all non volatile memories and erases the Flexy back to its factory defaults. This operation consists in 3 steps:

- Erasement of all non volatile memories, including all COM parameters and IP addresses
- Full hardware auto test with result shown by the ***USR*** LED
- Return to factory configuration (default one)

How to generate a second level reset:

1. Power the unit OFF and ON again
2. ***Immediately press and maintain*** the reset button. The LED labeled ***BI1*** turns ON
3. Wait approximately 35 seconds until the ***USR*** LED remains red steady
4. When this state is reached, release the button. The LED labeled ***BI1*** turns OFF
5. It takes no longer than 5 seconds to complete.

6. Check if the auto test is successful, the ***USR*** LED blinks red following a pattern of 200ms ON and 1,5 sec OFF. The Flexy does not restart in normal mode by itself and remains in this diagnose mode.
7. Power the Flexy OFF and ON again to reboot the unit in normal mode. As described before, the Flexy returns to its default COM parameters and factory IP addresses (default LAN IP: 10.0.0.53) after this second level reset is performed.

If a different pattern than the successful auto test one is displayed then this pattern reflects an issue.

The pattern starts with 200ms ON (beginning of the pattern) followed by OFF and a certain number of times 1 sec ON which allows to identify the nature of the detected problem. Please write down the observed pattern and contact the local distributor referring to the pattern error.

7.4 Reset Impact Matrix

	Erased or Reset	**Preserved**
Impact Reset Level 1 User Reset	User(s)	LAN IP address + mask
	adm password (see Web Interface section)	Internet access
	Tags	Language settings
	IO Server config	COM settings (modem, etc)
	Gateway config	Talk2M config + key
	Ewon Identification	Proxy configuration
	User Web site	Memory configuration
	User Scripts	
Impact Reset Level 2 Factory Reset	LAN IP address + mask	Nothing
	Internet access	
	Language settings	
	COM settings (modem, etc)	
	Talk2M config + key	
	Proxy configuration	
	Memory configuration	
	User(s)	
	adm password (see Web Interface section)	
	Tags	
	IO Server config	
	Gateway config	
	Ewon Identification	
	User Web site	
	User Scripts	

A Connector Pinout & Related Specifications

A.1 Main Connector

As shown in the picture, the female mating connector is labeled with the appropriate symbols.

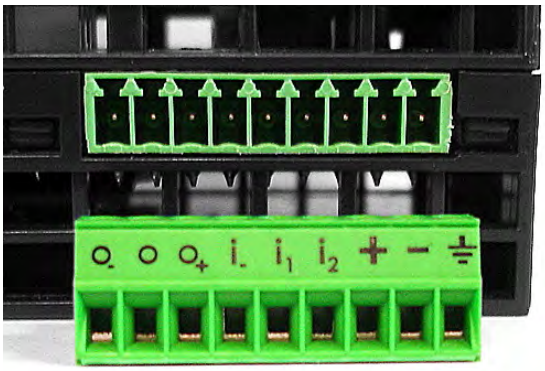

Fig. 19 Main Connector

Item	Labels	Description
Power Supply	⏚	Functional earth (FE) See *Field Implementation & Environmental Conditions, p. 12*
	-	Power in GND - (0V)
	+	Power in VDD + (between +12 et +24 VDC) *Related specification see below*
Digital Inputs	i_2	Input signal 2 *Related specification see below*
	i_1	Input signal 1
	i_-	Common ground of the inputs (isolated)
Digital Output	O_+	Common of the external predrive power supply (between +12 and +24 VDC)
	O	Output signal connected to the drain of the MOSFET transistor
	O_-	Output signal (0V ground) connected to the emitter of the MOSFET transistor

The maximal tightening torque is 0.25Nm.

A.2 Specification of the External Power Supply

The Ewon Flexy base units must be powered by a 12-24Vdc 100w max. certified for 60°C and for altitudes up to 2000m for conformity to the UL/IEC 62368-1 Ed3 or by a safety Low Power Supply (LPS) in accordance with clause 2.5 of UL/IEC 60950-1 Ed2. Standard, 12-24Vdc, 30W min. Certified for 70°C and for altitudes up to 2000m. The safety LPS power supply is not part of the delivery.

Characteristic	Value
Power supply voltage	external 12-24 VDC +/- 20%
Max. input power	30W max.
Internal voltage protection	max 30V
Input protection	protected against polarity inversion

Suggested power supply:

- SIEMENS SITOP logo power 24V 2.5A 60W - Siemens order ref: 6EP1332-1SH43
- Equivalents of the above on the market

A.3 Digital Output & Digital Inputs

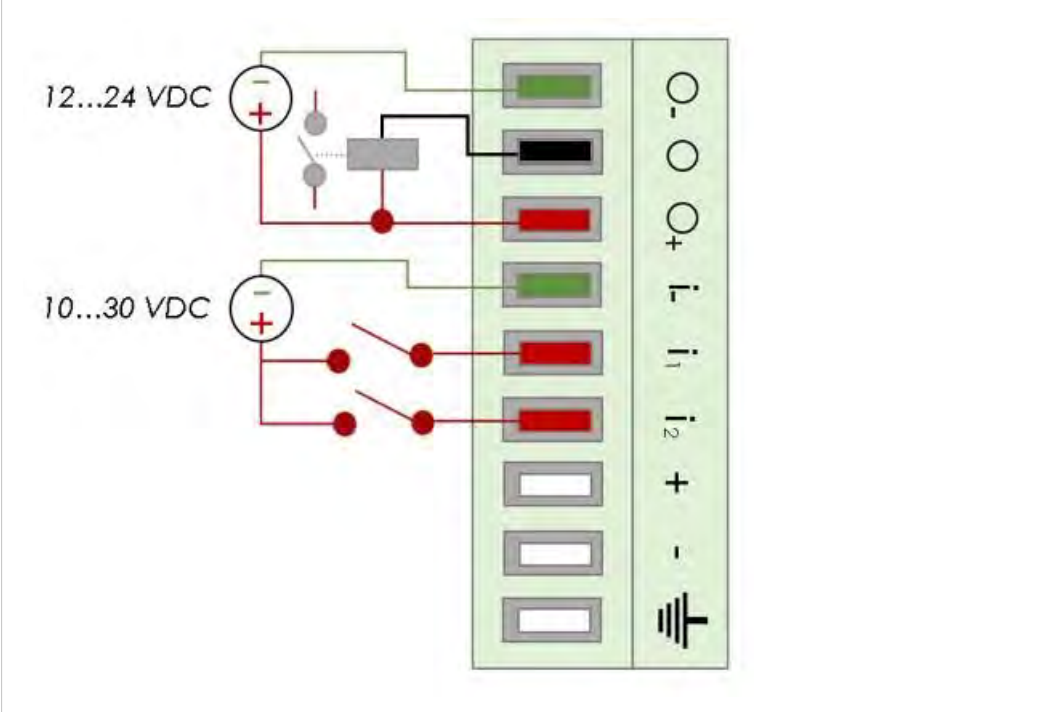

Fig. 20 Current scheme of the main connector

Characteristic	Value
Type of digital output [2]	Open drain MOSFET
Maximum current (ext,source)	200 mA
Isolation (both DI & DO)	1.5 kV
DI voltage range	0 to 30 VDC
DI protection	33 VDC Max
DI max frequency	10Hz or 100ms
DI OFF state — input voltage range	0 to 5 VDC
DI ON state — input voltage range	10 to 30 VDC
DI ON state — current range	From 3,8 mA @ 12 VDC to 8,2 mA @ 24 VDC

The Digital Output is activated by an open drain MOSFET transistor driven by an optocoupler. The maximum current flow inside this transistor has a value above the one specified in the Ewon, in order to cope with the switching power losses.

The transistor used is in an open drain type with predrive. This means the relay power supply has to be supplied from an external source to the predrive electronics.

The diagram below shows the external wiring needed for proper operation of the digital output. A relay has been chosen for this sample application but any load within the specifications can be used instead.

2. During the starting boot process, the DO will be switched ON for a short time (2 seconds)

This is a sink only output to ground (the transistor acts as a switch ground).

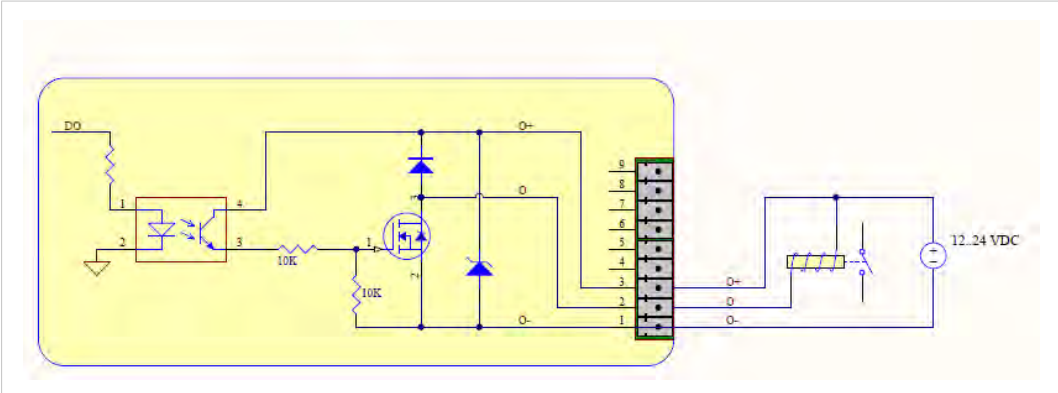

Fig. 21 External wiring for the Digital Output

A.4 Serial Interface (Flexy 102 & 202)

Characteristic	Value			
Physical modes	RS232/422/485 (1500V galvanic isolation through the power supply isolation from ground)			
Polarization	330 Ω (if polarization & termination are activated)			
Termination	120 Ω (if polarization & termination are activated)			
SUBD9 male connector pinout (Flexy side)	**Pin #**	**RS232**	**RS485**	**RS422**
	1	-	-	-
	2	RXD	-	Rx+
	3	TXD	A+	Tx+
	4	-	-	-
	5	GND	GND	GND
	6	-	-	-
	7	RTS	-	Rx-
	8	CTS	B-	Tx-
	9	-	-	-

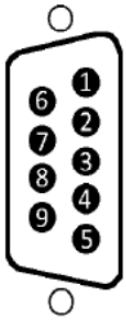

A.5 MPI Interface (Flexy 103 & 203)

Characteristic	Value	
Physical mode	MPI (1500V galvanic isolation through the power supply isolation from ground)	
Baud rates	From 9,6 kBauds to 12,0 MBauds	
Polarization	100 kΩ	
Termination	None	
SUBD9 female connector pinout (Flexy side)	**Pin #**	**MP**
	1	-
	2	-
	3	B+
	4	-
	5	GND
	6	-
	7	-
	8	A-
	9	-

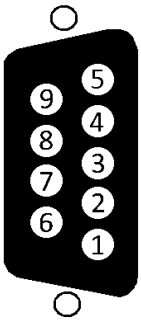

B Flexy Products Overview

B.1 Base Unit

Routing Capabilities	4 ports Ethernet only		Ethernet & serial		Ethernet & MPI	
	Reference	Available Energy Points	Reference	Available Energy Points	Reference	Available Energy Points
M2M router	Flexy 201	20	Flexy 202	21	Flexy 203	22
M2M data gateway	Flexy 101	20	Flexy 102	21	Flexy 103	22

As explained in *Extension Card Power Requirements, p. 25*, the sum of energy demand points of the extension cards must not exceed the available energy points on a base unit level.

B.2 Extension Cards

Picture	Reference & name	Slot compatibility	Maximum supported	Energy demand points	Installation Guide
	FLA 3301 2 Serial-Ports	●●○○	2	1	IG-0016-00
	FLX 3101 Ethernet 10/100	●●●●	1	1	IG-0017-00
	FLX 3401 8DI-4AI-2DO	●●●●	4	2	IG-0018-00
	FLX 3402 8DI-4AI-2DO	●●●●	4	2	IG-0018-01

Picture	Reference & name	Slot compatibility	Maximum supported	Energy demand points	Installation Guide
	FLB 3202 3G GSM	○○●●	1	10	IG-0019-00
	FLB 320A 4G EU	○○●●	1	8	IG-0034-00
	FLB 3271 WI-FI	○○●●	1	4	IG-0020-00
	FLB 3208 4G NA	○○●●	1	8	IG-0033-00
	FLB3601 USB	○○●●	1	9	IG-0024-00

> **!** Since July 2016, the FLX 3401 has been tagged as end of life and is replaced by the FLX 3402.

As explained in *Software Compatibility of Multiple Cards Combination, p. 25*, the number of cards of the same type supported by the firmware is indicated in this table.

As explained in *Extension Card Power Requirements, p. 25*, the sum of energy demand points of the extension cards must not exceed the available energy points on a base unit level.

C Flexy Isolation Scheme

C.1 Base Unit

	Flexy 201	Flexy 202 & 203
Connector shielding	Earth connected	
Ethernet signals	Isolated from DGNG with a transformer	
MPI / serial ports	/	Isolated from PGND only

> **!** Serial ports GND = DGND

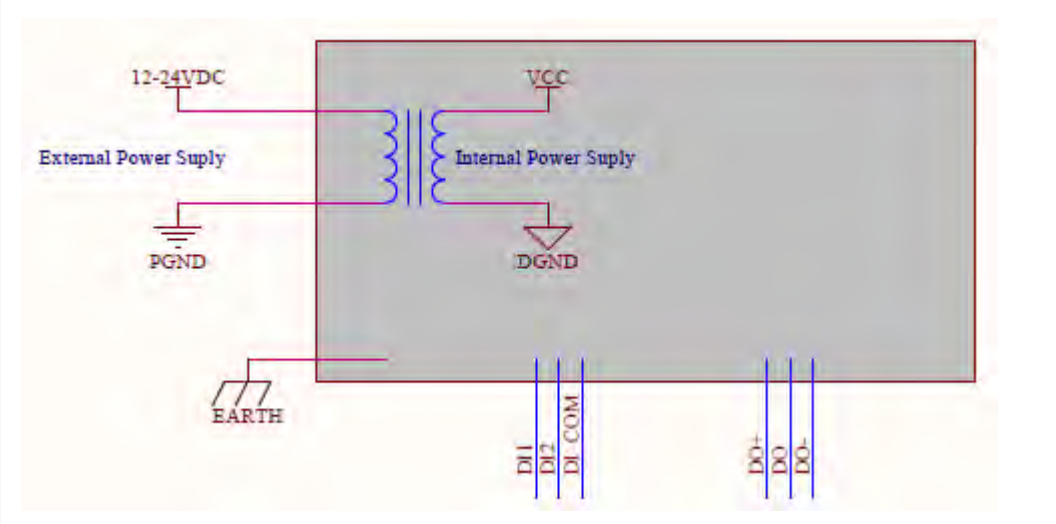

Fig. 22 Isolation Scheme for the Base Unit

Based on the above picture:

- External and internal power supplies are isolated from each other (1.5kV)
- DI signals: isolated from DO signals, PGND and DGND (optocoupler)
- DO signals: isolated from DI signals, PGND and DGND (optocoupler)
- Earth is isolated from external and internal power supplies

C.2 Extension Cards

C.2.1 FLB 320x – Cellular

DGND = GND RF from SMA connector

> **!** Avoid external connections between GND RF and Earth.

C.2.2 FLX 3101 – WAN Ethernet

Connector shielding: Earth connected

Ethernet signals: isolated from DGND with a transformer

C.2.3 FLX 3271 – Wi-Fi

DGND = GND RF from SMA connector

!	Avoid external connections between GND RF and Earth.

C.2.4 FLX 340x – I/O

DO signals: isolated relays outputs

DI signals: isolated from DGND (optocoupler)

AI signals: isolated from PGND only

!	AI-GND = DGND

C.2.5 FLA 3301 – Dual Serial Ports

Serial port signals: isolated from PGND only

Connector shielding: connected to Earth

!	Serial ports GND = DGND

C.2.6 FLB 3601 – 3 USB Ports

USB signals: isolated from PGND only

Connector shielding: connected to Earth

Due to USB connector design, Earth-DGND isolation is limited to 500V when the USB extension card is inserted

!	AI-GND = DGND

14 rue Edouard Petit
42000 St-Etienne
Tel : +33 477 92 03 56
Email : contact@rg2i.com
www.rg2i.com