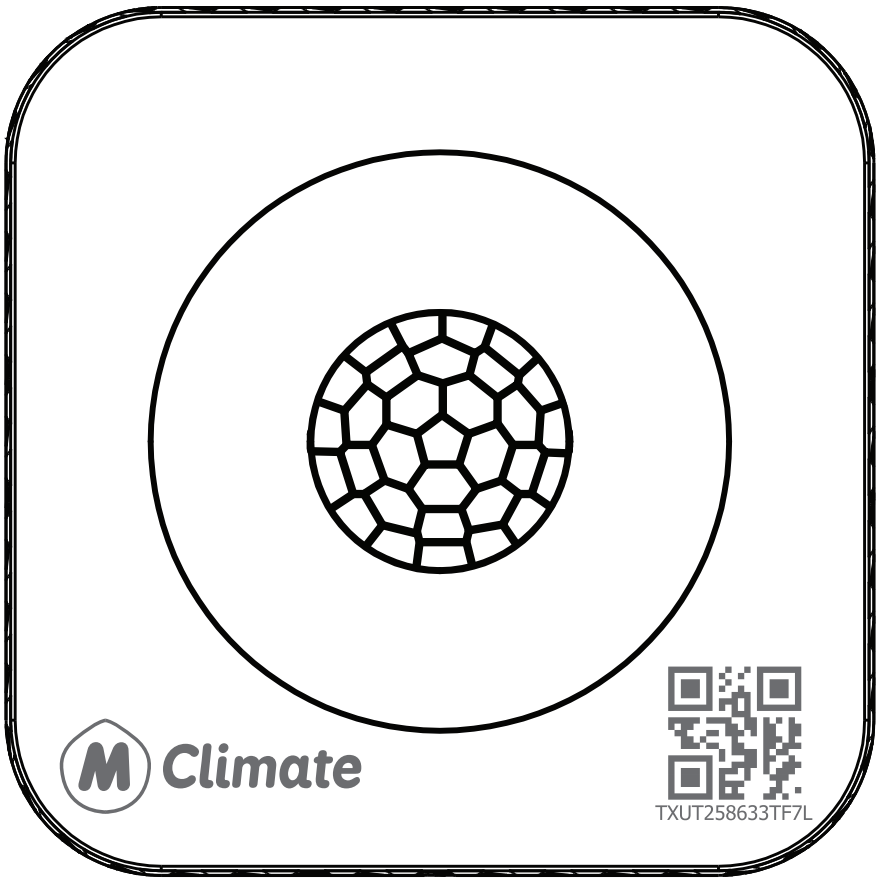

MClimate PIR mini LoRaWAN®

User manual

14 rue Edouard Petit
42000 St-Etienne
Tel : +33 477 92 03 56
Email : contact@rg2i.com
www.rg2i.com

Scan the QR Code to access MClimate PIR mini LoRaWAN® extended documentation

mclimate.eu/lorawan-resources

Need some help?

For more product information and issues related to it, visit:
mclimate.eu/lorawan-resources

or write us to:
lorawan-support@mclimate.eu

00359 800 3 1010
Monday-Friday 09:00 - 18:00

Sofia, Bulgaria
Sofia Tech Park,
labs building, floor 1

Bulgarian

За да разберете как се инсталира MClimate PIR mini LoRaWAN®, сканирайте QR кода или посетете линка до него.

Czech

Chcete-li zjistit, jak nainstalovat MClimate PIR mini LoRaWAN®, prohlédněte si kód QR nebo navštivte odkaz vedle něj.

Italian

Per installare MClimate PIR mini LoRaWAN® scannerizzare il codice QR oppure aprire il link al suo lato.

Polish

Aby dowiedzieć się, jak zainstalować MClimate PIR mini LoRaWAN®, zeskanuj kod QR lub odwiedź link obok niego.

Swedish

För att ta reda på hur du installerar MClimate PIR mini LoRaWAN®, skanna QR-koden eller besök länken bredvid den.

Finnish

Tutustu MClimate PIR mini LoRaWAN®-laitteen asentamiseen, skannaa QR-koodi tai vierailla sen vieressä olevassa linkissä.

German

Um herauszufinden, wie man MClimate PIR mini LoRaWAN® installiert, scannen Sie den QR-Code oder besuchen Sie den Link daneben.

French

Pour savoir comment installer MClimate PIR mini LoRaWAN®, scannez le code QR ou visitez le lien à côté de celui-ci.

Dutch

Om te weten te komen hoe u MClimate PIR mini LoRaWAN® installeert, scan de QR-code of bezoek de link ernaast.

Spanish

Para saber cómo instalar MClimate PIR mini LoRaWAN®, escanee el código QR o visite el enlace al lado.

Table of content

01
What is in the box? 2

02
Technical details, Safety instructions, Legal Notices & Compatibility 3

03
Device Parts, Mechanical dimensions 4

04
LED, Buttons and behaviour 5-6

05
Commissioning 7-8

06
Placement guidelines 9

07
Installation 10

What's inside the box?

MClimate PIR mini Sensor LoRaWAN®

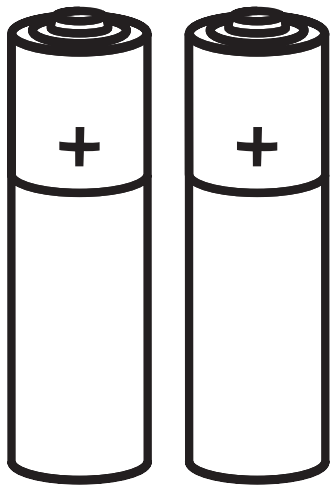

2xAA Batteries
Energizer Lithium Ultimate L91

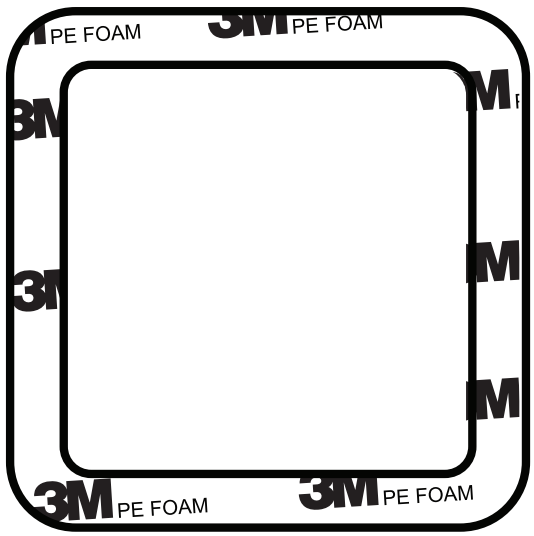

3M mounting double-sided tape

Secure bolt

Technical specifications

Description: LoRaWAN® PIR Sensor
Model: MC-LW-PIR-MINI-01-BI
Dimensions: 57.5mm x 57.5mm x 21.7mm
Weight: 34gr
Frequency range: 863÷870MHz
LoRaWAN® Device type: Class A End-device
Power supply: 2xAA batteries 1,5VDC
Sensors: Temperature and humidity sensor, PIR sensor, LUX sensor
Work temperature: 0°C to +60°C
Material: PC/ABS
Environmental conditions, in which the device is intended to operate:
- Indoor using;
- for altitude up to 2000m;
- for an ambient temperature:0°C to +60°C;
- for maximum relative humidity of 80% for temperature up to 31°C, decreasing linearly to 25% relative humidity at temperature 50°C;
- for environment with a degree of contamination 2 (PD2).

Storage and transportation conditions:
- for an ambient temperature:-40°C to +85°C;
- for relative humidity 5% to 90% without condensation

Manufacturer
MClimate Jsc, 1784 Sofia, Sofia Tech Park, Labs Building, 111J Tsarigradsko Shose

Compliance with the WEEE Directive
The appliance marked with this symbol should not be disposed of with other household waste. It must be handed over to the relevant collection point for the recycling of electrical and electronic equipment.

⚠ Safety Instructions

Please read the safety instructions before installing the device! Failure to follow the recommended instructions in this manual may be dangerous or in violation of the law. The manufacturer MClimate Jsc., is not responsible for any loss or damage caused by failure to follow the instructions in the operating manual.

Legal Notices
All information, including but not limited to, features, functionality, and / or other product specifications are subject to change without notice. MClimate retains all rights to review or update its products, software or documentation without being required to notify any natural or legal person.
The MClimate and MClimate logo are trademarks of MClimate Jsc. All other brands and product names mentioned herein are trademarks of their respective owners.

EU Declaration of Conformity
This device complies with the essential requirements and other applicable provisions of the following EU directives:

2014/35/EU (LVD)	**EN 55032**
EN IEC 62368-1	**EN 55035**
2014/30/EU (EMC)	**2014/53/EU (RED)**
EN 301 489-1	**EN 300 220-2 V3**

Compatibility
In order to operate MClimate PIR mini LoRaWAN®, you will need:
LoRaWAN® network
Battery (2xAA battery 1,5VDC)
Device operating voltage: 2.7 - 3.6VDC

Device parts

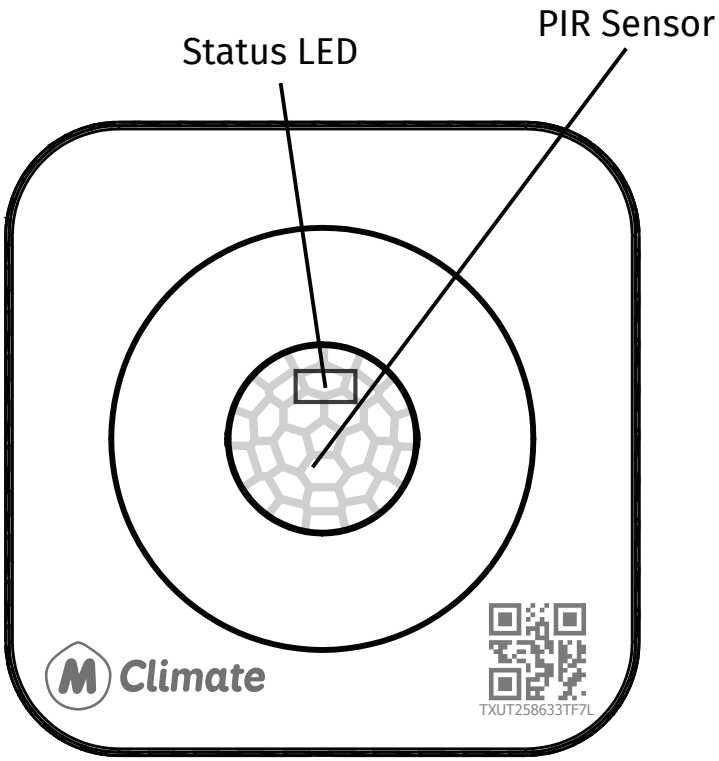

Assembled MClimate PIR mini LoRaWAN®, front view

Disassembled MClimate PIR mini LoRaWAN®, back view

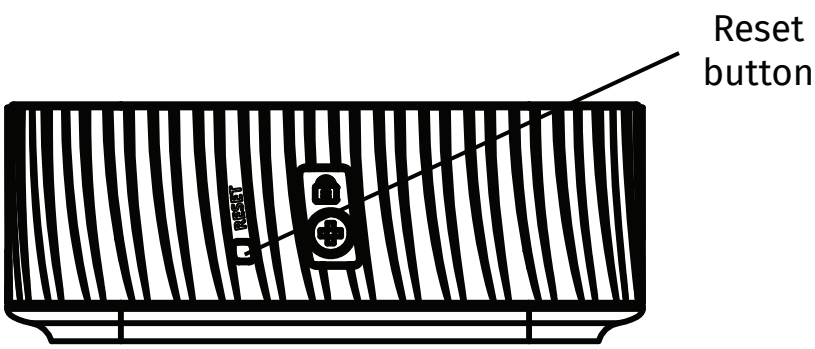

Assembled MClimate PIR mini LoRaWAN®, side view

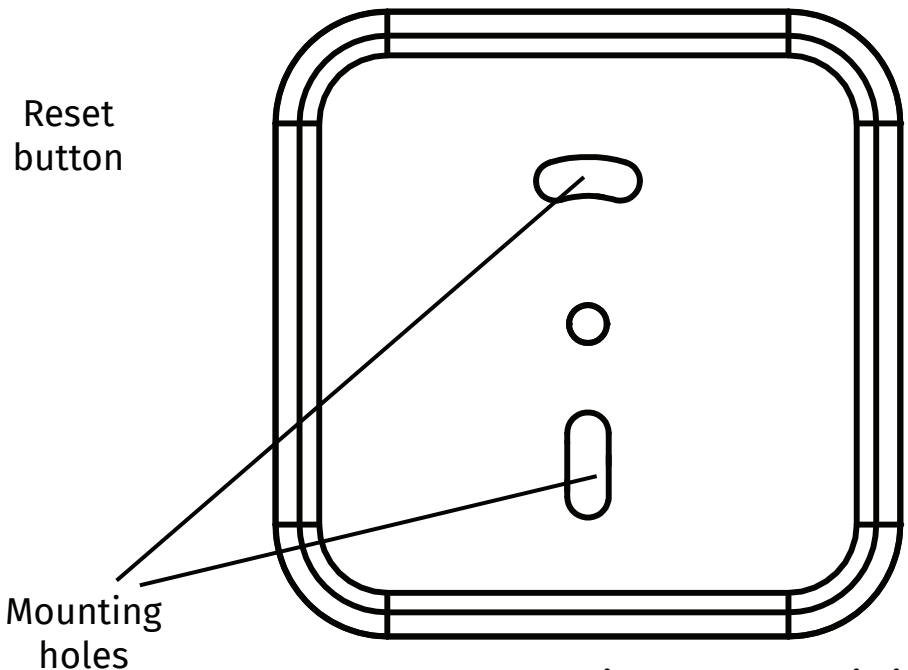

Assembled MClimate PIR mini LoRaWAN®, back view

LED, Buttons and behaviour

Start-up behavior

The device starts when you insert the two AA batteries or when you remove the batteries pull tab. Power-on is indicated by the Status LED lighting up in blue for 2s.

The device immediately sends a LoRaWAN Join-Request on SF12. While it is waiting for a Join-Accept from the LNS, the Status LED blinks briefly in yellow every 1s.

If the join procedure has been successful, the LED shows solid green color for 3 seconds.

Using the Reset button during installation

If you observe the Status led after you initially power-on the device, you won't have to use the Reset button to check the LoRaWAN connectivity status.

- If you are servicing a site and need to understand if the device is connected to the LoRaWAN network, you can press the reset button briefly.

- If it shows solid indication for 3 seconds, then it is connected to a LoRaWAN network.

- If blinks briefly every 1s, it means that the device has not received a Join-Accept from

Data transmissions

Once joined, the device will execute four types of transmissions:

- Periodic, as configured
- When the PIR sensor detects a movement and occupancy is false.
- When the "Occupancy timeout" expires
- When the reset button is clicked.

All transmissions are subject to complying with the duty-cycle limitations of LoRaWAN end-devices.

LED, Buttons and behaviour

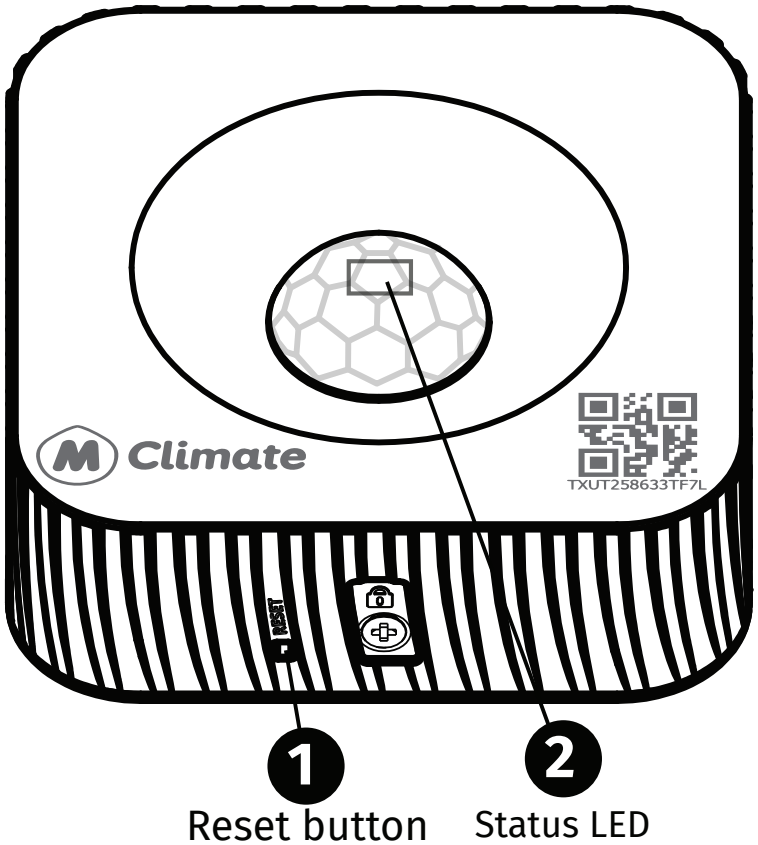

#	Button	Function
1	Brief press❶, up to 10s	When pressed quickly, the LED❷ shows the LoRaWAN connectivity status and the device checks the Temperature & Humidity levels. If it is connected the measurements are send.
2	Long press❶, 10s and more	When pressed for 10s the device resets, triggering a Join Request on SF12. Performing a Reset IS NOT equal to factory reset. All configured parameters are preserved.

Commissioning

1 Open your LoRaWAN® Network provider access panel and add the device using the supplied Serial Number, DevEUI, AppEUI (JoinEUI) and AppKey.

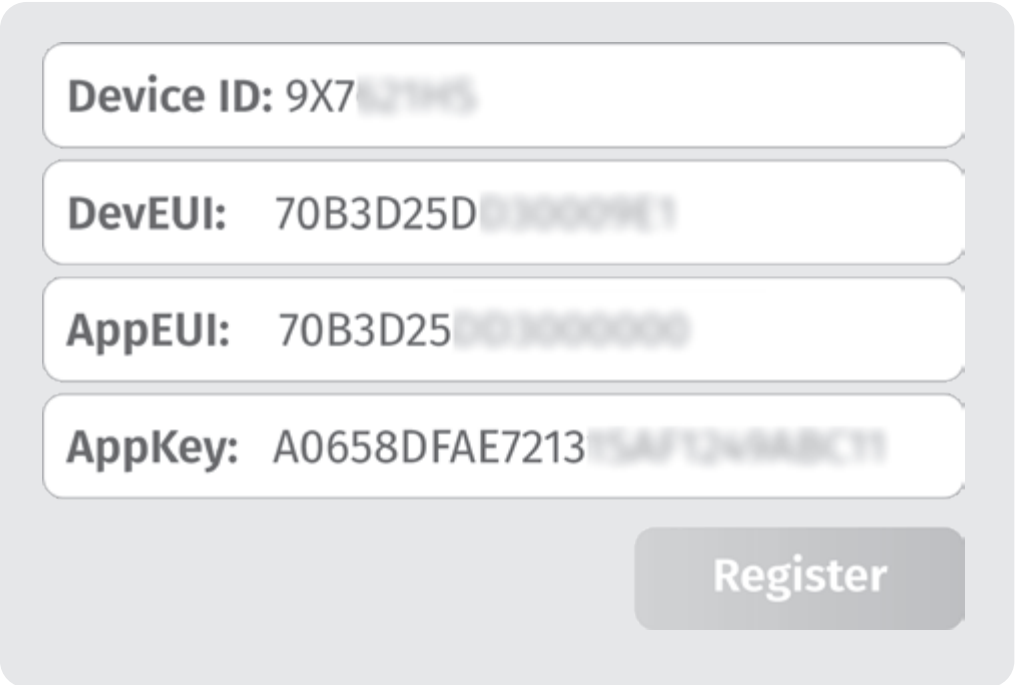

The data is example.
Do not use.

2 Continue the Installation with the instructions of your LoRaWAN® Network provider.

MClimate_LoRaWAN_51177

Serial Number	DevEui	AppEui	AppKey
G	70	70B	5fc31

You can get DevEUI, AppEUI (JoinEUI) & AppKey information from the LoRaWAN® credentials .csv file we sent you with the fulfillment confirmation.

3 After pulling away the protective film from the batteries, the device will automatically connect to the network. In order to see whether the device has connected to the network, please check **LED, Buttons and behaviour.**

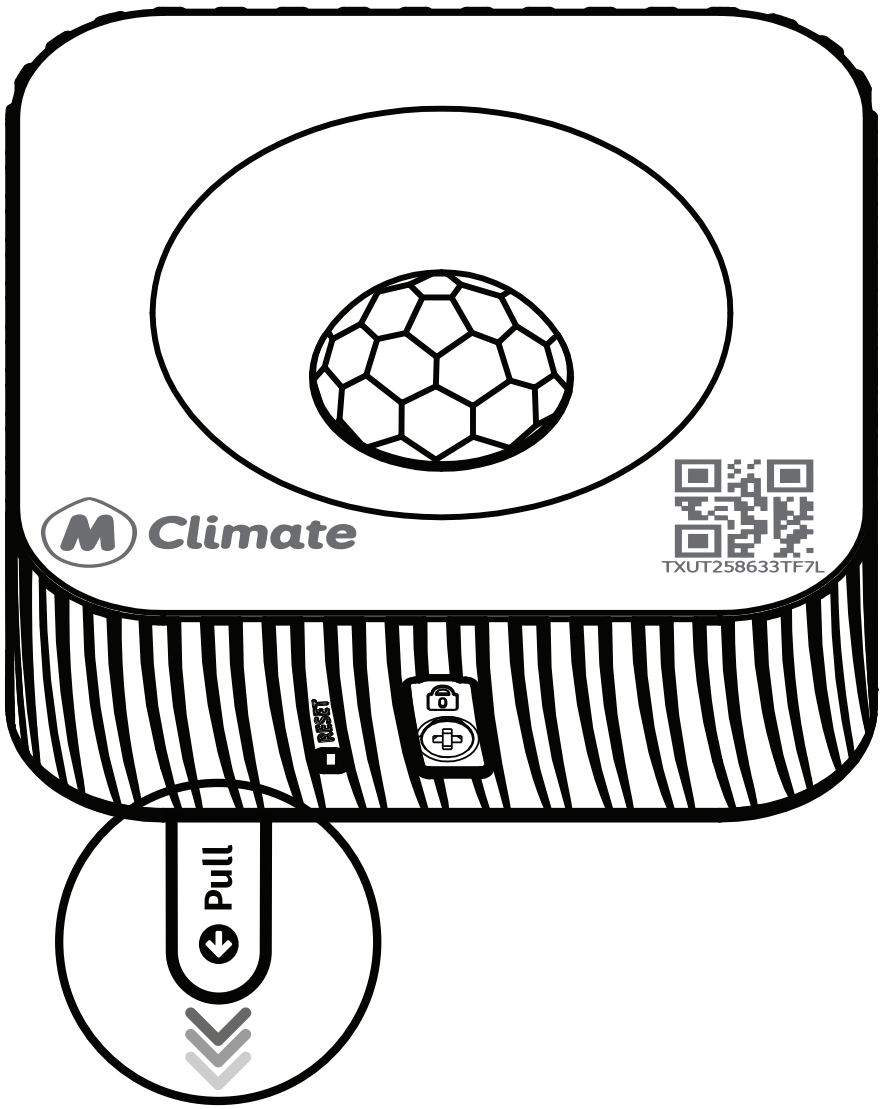

Placement guidelines

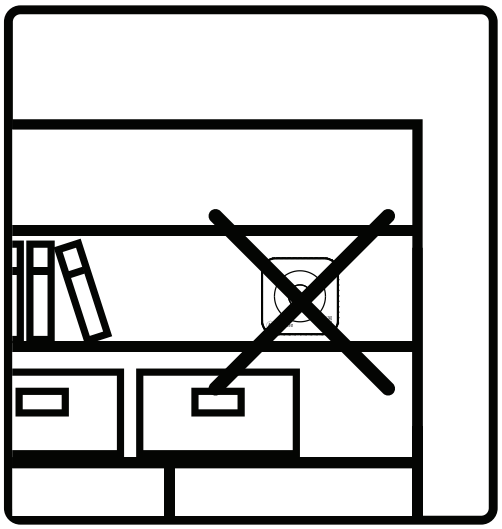

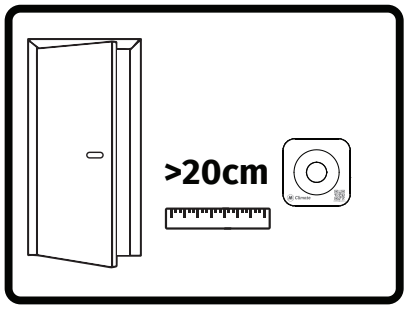

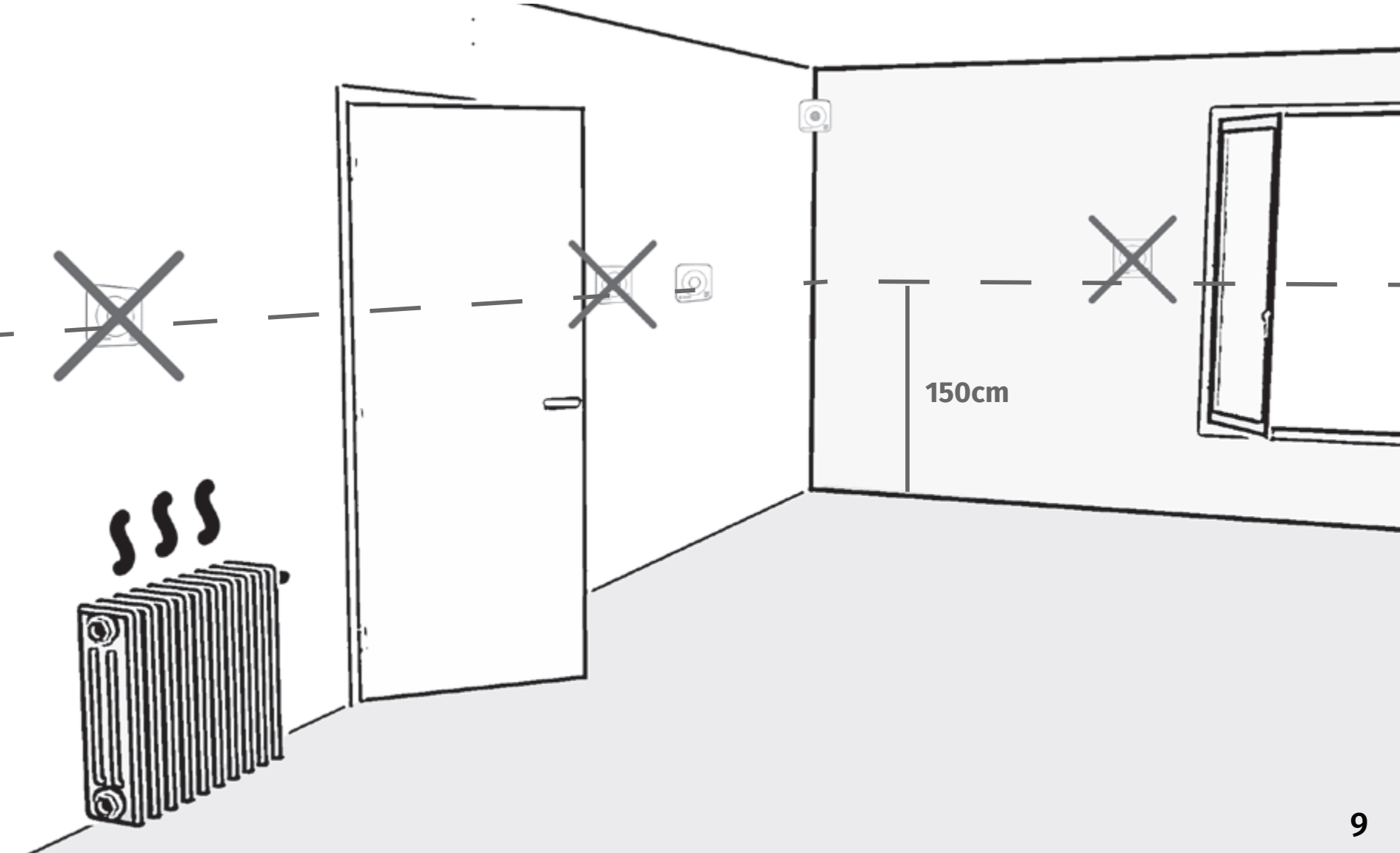

Installation

We recommend installing the device in an open environment (e.g. not in a recess) at 1.5m height. Do not install the device near big metal items as it will worsen the RF performance. Use double-sided tape to attach it to the surface or screws and dowels to attach the wall-mounting plate in a more permanent manner.

Once you've secured the wall-mounting plate either with the included 3M tape or with screws and dowels, place the main device part on top and press until it clicks in place.

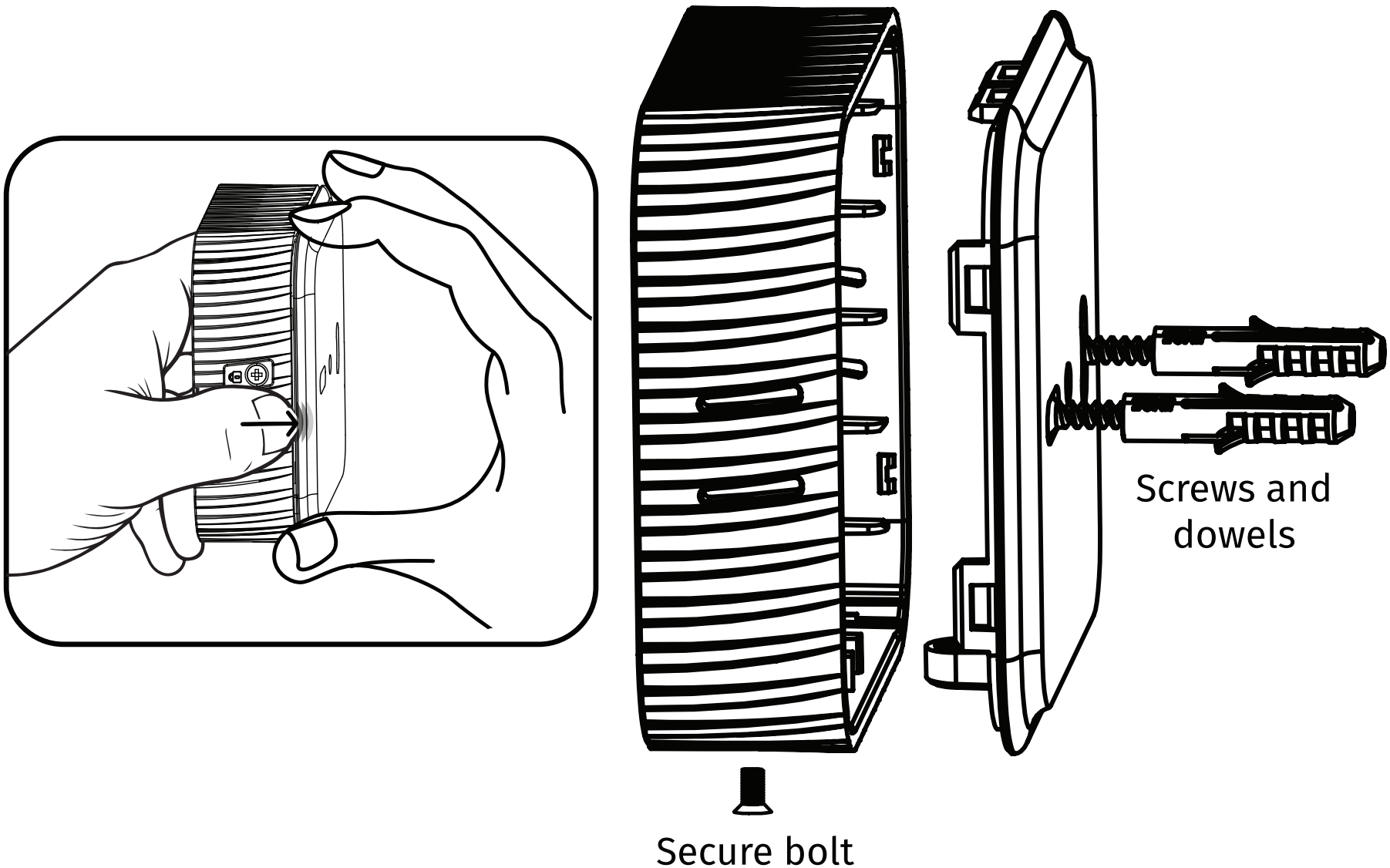

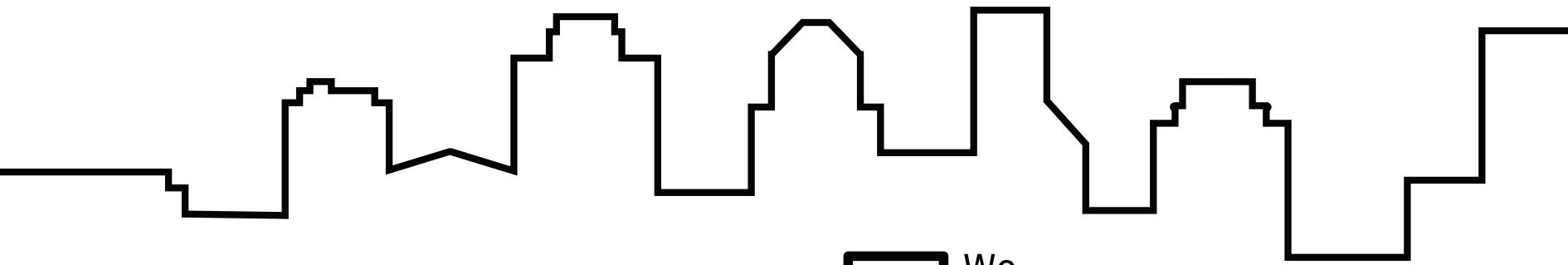

MClimate

We make any building **smart.**

www.mclimate.eu

Designed & Manufactured by MClimate in Europe.

RG2i Spécialiste IoT & M2M

14 rue Edouard Petit
42000 St-Etienne

Tel : +33 477 92 03 56
Email : contact@rg2i.com

www.rg2i.com