Milesight

Uninterruptible Power Supply

UPS01

User Guide

14 rue Edouard Petit
42000 St-Etienne
Tel : +33 477 92 03 56
Email : contact@rg2i.com
www.rg2i.com

Safety Precautions

Milesight will not shoulder responsibility for any loss or damage resulting from not following the instructions of this operating guide.

- The device must not be remodeled in any way.
- **Do not place the device close to objects with naked flames, otherwise it will explode.**
- **Do not place the device where the temperature is below/above the operating range: -20°C to +60°C. When the temperature is over 60°C, it may cause explode.**
- Power off the device when installing or wirings.

Declaration of Conformity

UPS01 is in conformity with the essential requirements and other relevant provisions of the CE, FCC, and RoHS.

Copyright © 2011-2023 Milesight. All rights reserved.

All information in this guide is protected by copyright law. Whereby, no organization or individual shall copy or reproduce the whole or part of this user guide by any means without written authorization from Xiamen Milesight IoT Co., Ltd.

For assistance, please contact

Milesight technical support:

Email: iot.support@milesight.com

Tel: 86-592-5085280

Fax: 86-592-5023065

Address: Building C09, Software Park III, Xiamen 361024, China

Revision History

Date	Doc Version	Description
Aug. 11, 2023	V 1.0	Initial version

Contents

1. Product Introduction 4
1.1 Overview 4
1.2 Features 4
2. Hardware Introduction 4
2.1 Packing List 4
2.2 Hardware Overview 5
2.3 Dimensions (mm) 6
3. Installation 6
3.1 Wall Mounting 6
3.2 DIN Rail Mounting 6
3.3 Pole Mounting 7
4. Operation Guide 8
4.1 Charge 8
4.2 Discharge 8
5. Communication 9
5.1 Basic Information 9
5.2 Alarm Settings 10
5.3 Upgrade 10

1. Product Introduction

1.1 Overview

Milesight UPS01 is an advanced uninterruptible power supply (UPS) designed to ensure uninterrupted operation of various devices. Featuring IP67 and IK08 ratings, UPS01 can withstand demanding environments and provide reliable protection against dust, water, and mechanical impact.

UPS01 makes it simple to prolong the working time of connected devices and supply with not only internal batteries but also an external power source through power adapter. Its plug-and-play design enables quick and easy integration with various devices without the need for additional configuration. For added flexibility, the UPS01 offers M12 and Type-C connectors to suit different power supply scenarios.

What sets the UPS01 apart is its compatibility with Milesight network devices. This allows for real-time monitoring of power consumption and remote alarm notification to facilitate effective and smart management.

1.2 Features

- Adopt rechargeable 12000mAh high-capacity battery for providing up to 32 hours' supplement
- Equip with heating film for protecting battery in low-temperature environment
- High IP67 and IK08 protection for adapting to harsh environment
- Equip with tricolor indicators and cooperate with smart internal logic for status display
- Compact size with multiple deployment methods for adapting to different scenarios
- Compatible with Milesight devices for managing both power monitoring and alarming remotely
- Provide dual versions of connectors for satisfying different output voltages and devices
- Support plug-and-play without further configuration
- Overcharging and overdischarging protection

2. Hardware Introduction

2.1 Packing List

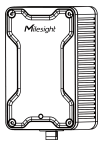
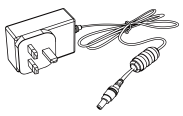

1 × UPS01 Device	1 × Power Adapter	1 × Mounting Bracket	4 × Wall Mounting Kits
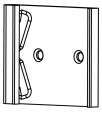	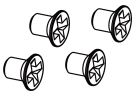		
1 × DIN Rail Mounting Clip	4 × Fixing Screws	1 × Quick Start Guide	1 × Warranty Card

If any of the above items is missing or damaged, please contact your sales representative.

2.2 Hardware Overview

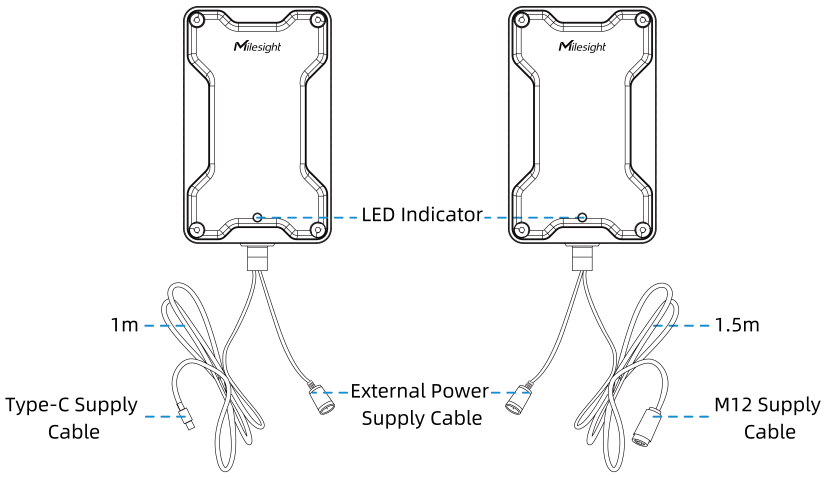

UPS01 (Type-C Version) UPS01 (M12 Version)

M12 Interface Definition:

Pin	Description
1	DC- (Negative)
2	RS485_B
3	RS485_A
4	DC+ (Positive)

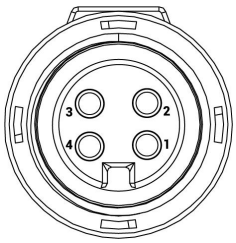

2.3 Dimensions (mm)

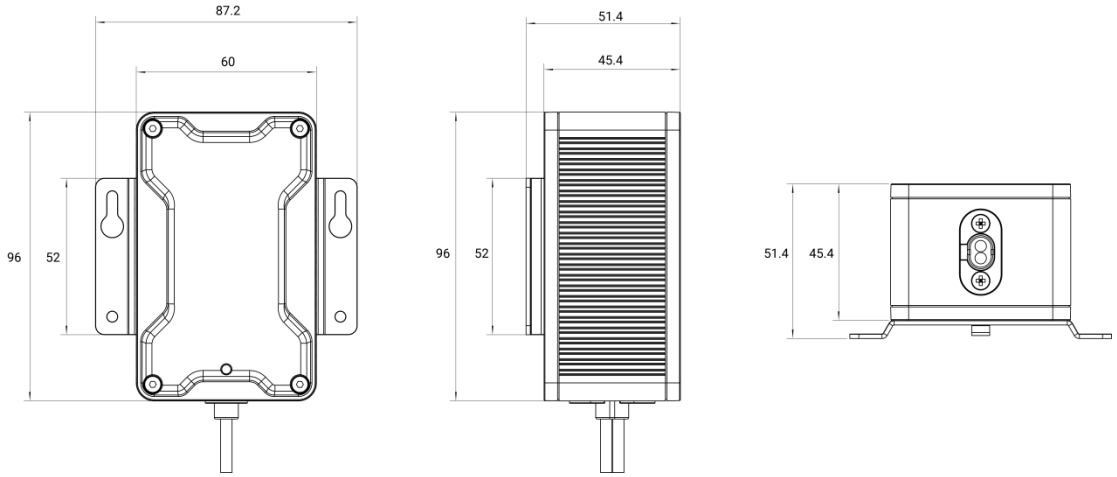

3. Installation

Milesight UPS device can be placed on a desktop or mounted to a wall, pole or a DIN rail.

3.1 Wall Mounting

1. Fix the mounting bracket to the device with 2 screws.

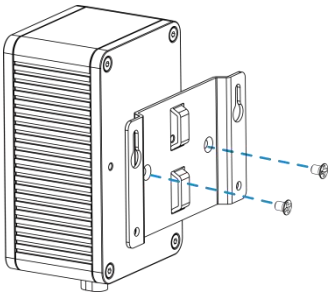

2. Drill 4 holes on the wall according to the bracket, then fix the wall plugs into the wall.
3. Fix the device to the wall plugs with screws. When installation, it's suggested to fix the two screws on the top at first.

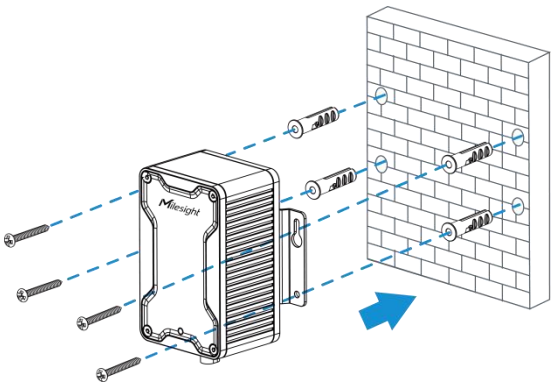

3.2 DIN Rail Mounting

1. Fix the DIN rail mounting clip to the device with 2 fixing screws.

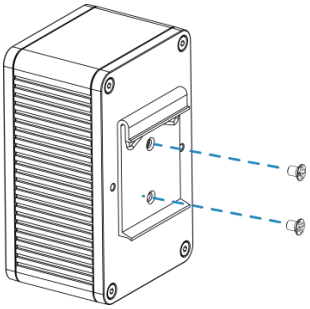

2. Hang the device to the DIN rail. The width of DIN rail is 3.5cm.

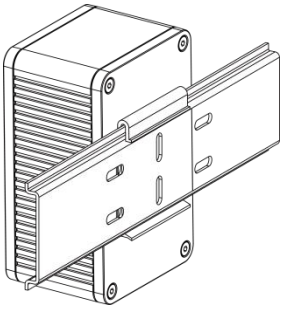

3.3 Pole Mounting

1. Fix the mounting bracket to the device with 2 screws.

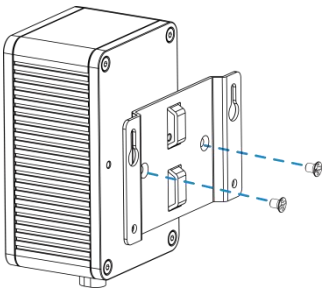

2. Straighten out the hose clamps and slide it through the rectangular holes in the mounting bracket, wrap the hose clamps around the pole, then use a screwdriver to tighten the locking mechanism by turning it clockwise.

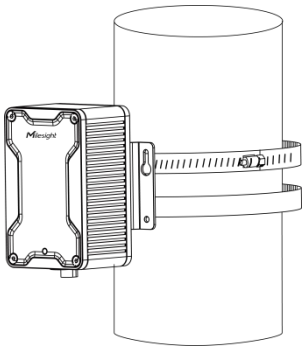

Note: UPS and the terminal device can be fixed together with the same hose clamp. When being installed together, the UPS can be wrapped by only one hose clamp.

4. Operation Guide

4.1 Charge

When the UPS is connected to the external power supply, the external power will supply power to terminal devices via UPS and charge the batteries of UPS at the same time.

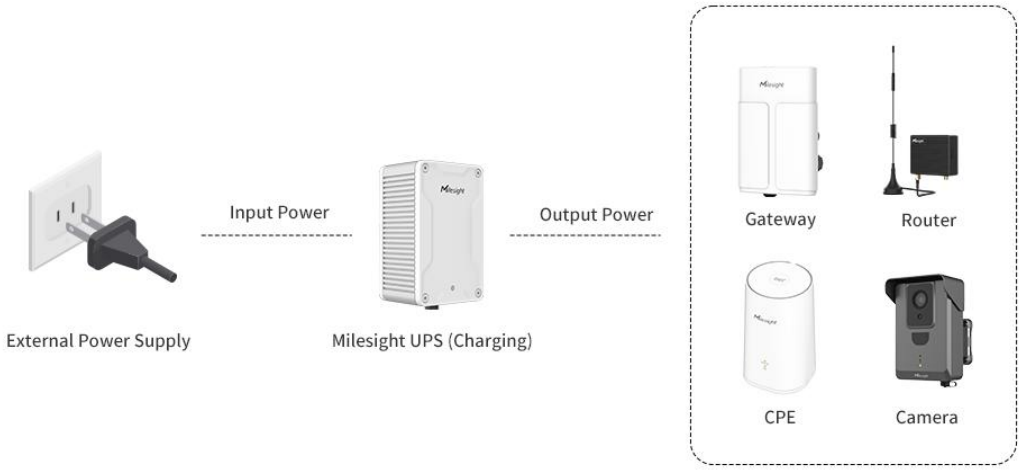

When charging, the indicator will display as below:

Battery Level	LED Indicator
> 80%	Static On
0~80 %	Slowly Blinks
Abnormal Charge	Static On

Note: It will stop charging if the temperature is exceeding the charging temperature: **-20°C to +45°C.**

4.2 Discharge

When the external power supply is disconnected, the terminal devices will be powered by the UPS.

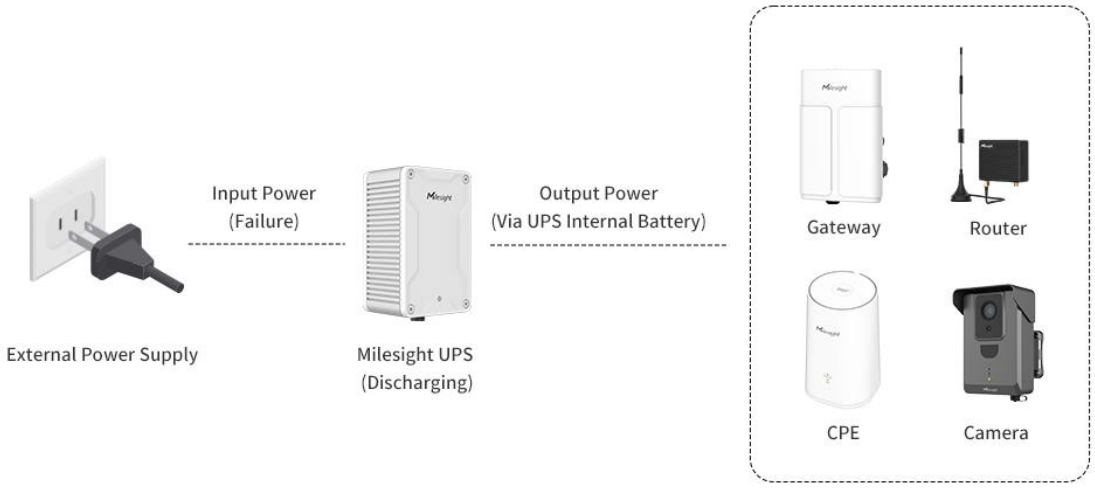

When discharging, the indicator will display as below:

Battery Level	LED Indicator
> 80%	Blinks Slowly
20~80 %	Blinks Slowly
< 20%	Blinks Slowly
0%	Off

Note: It will stop discharging if the temperature is exceeding the discharging temperature: **-20°C to +60°C.**

5. Communication

When Milesight UPS is connected to Milesight devices, it will communicate with Milesight devices via RS485 port and supports to monitor the power, send alarms and upgrade via Milesight devices' web GUI. Here is the compatible version list:

Model[1]	Compatible Firmware Version	Upgrade	Alarm
UG65/UG67	60.0.0.42	√	√
UR75/UF51 OpenCPU	78.0.0.3	√	
UR41	41.0.0.3	√	√

5.1 Basic Information

When Milesight UPS is connected to Milesight devices, the UPS basic information will also show on the Status page of Milesight devices.

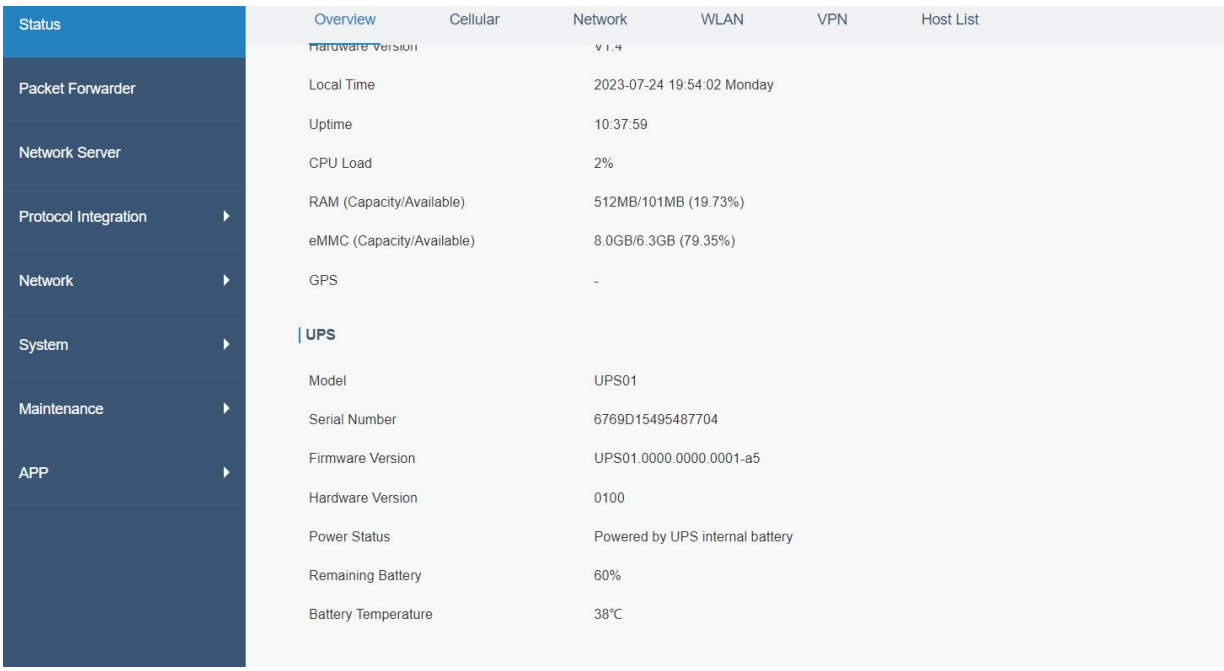

[1] Other models are under development.

UPS	
Item	**Description**
Model	The model name of the UPS device.
SN	The serial number of the device.
Firmware Version	The current firmware version of the device.
Hardware Version	The current hardware version of the device.
Power Status	The current power status of this device.
Remaining Battery	The remaining battery level of the device. The detection accuracy is ± 10%.
Battery Temperature	The current battery temperature inside the device. The detection accuracy is ± 1°C

5.2 Alarm Settings

When Milesight UPS is connected to Milesight devices, the devices support to record the events of UPS and send SMS/Email alarms. For event settings please refer to corresponding user guides.

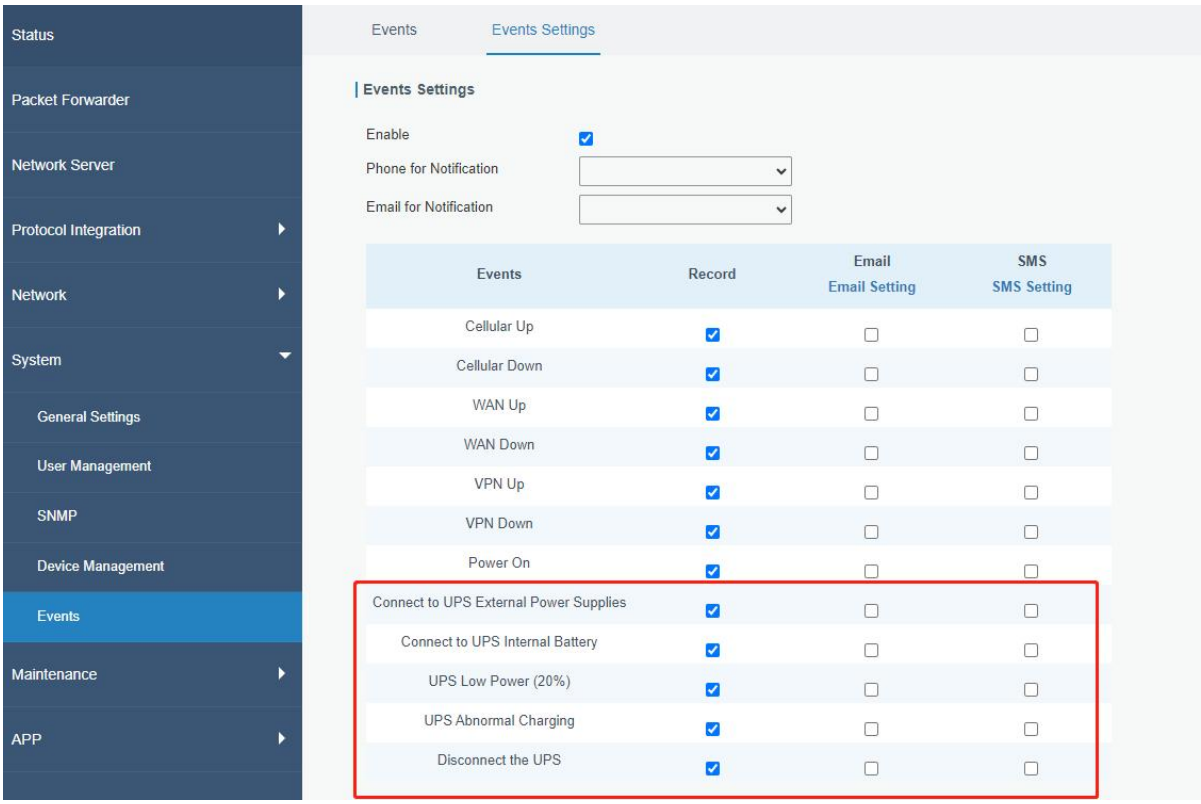

5.3 Upgrade

Download UPS firmware from Milesight official website, then go to Upgrade page of Milesight

devices to import the firmware and upgrade the UPS device.

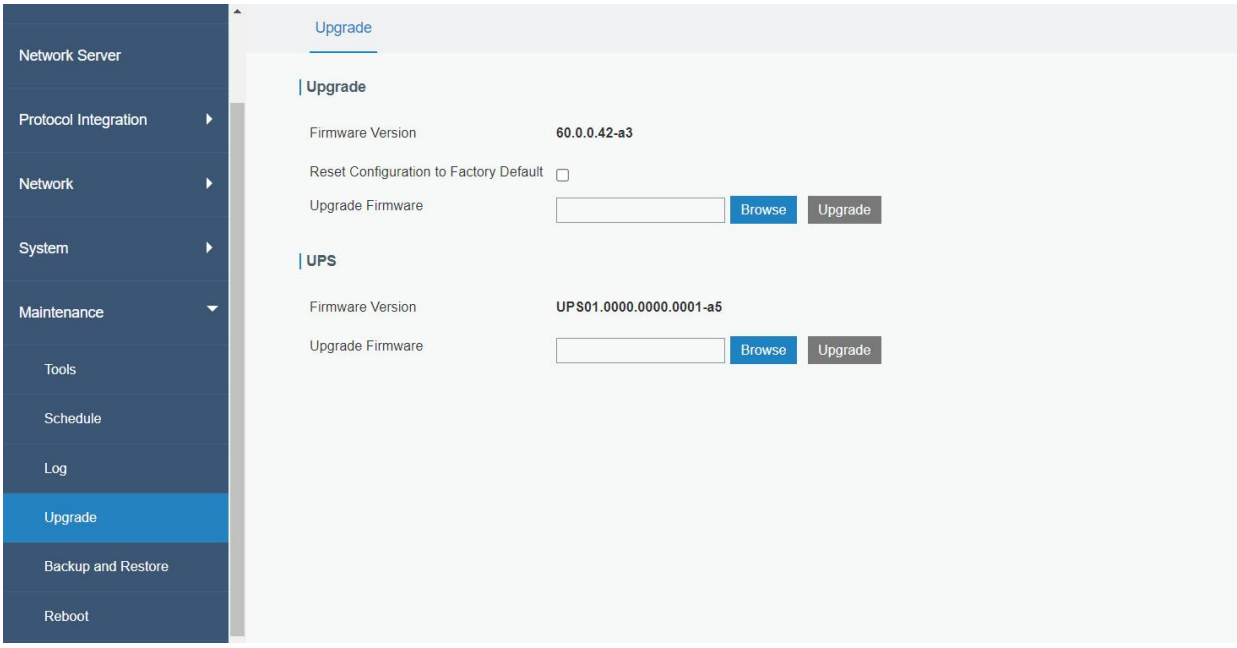

UPS	
Item	**Description**
Firmware Version	Show the current firmware version.
Upgrade Firmware	Click **Browse** button to select the new firmware file, and click **Upgrade** to upgrade firmware.

-END-