Milesight

WS101

Smart Button

User Guide

14 rue Edouard Petit
42000 St-Etienne

Tel : +33 477 92 03 56
Email : contact@rg2i.com

www.rg2i.com

Contents

Chapter 1. Preface 4

Copyright Statement 4

Safety Instruction 4

Revision History 5

Chapter 2. Product Introduction 6

Overview 6

Features 6

Chapter 3. Hardware Introduction 7

Packing List 7

Hardware Overview 7

Button and LED Indicator 7

Dimensions(mm) 8

Chapter 4. Quick Start 9

Access the Sensor via NFC 9

Configure the Network Setting 10

Chapter 5. Operation Guide 12

Button Mode 12

LoRaWAN® Settings 12

General Settings 15

Milesight D2D Setting 16

Maintenance 18

Upgrade 18

Backup and Restore 18

Reset to Factory Default 21

Chapter 6. Installation 23

Chapter 7. Battery Replacement 24

Chapter 8. Uplink and Downlink 25

Overview..... 25
Uplink Data..... 25
Basic Information..... 25
Button Message..... 26
Battery Level Report..... 26
Downlink Command..... 27
Chapter 9. Services..... 28

Chapter 1. Preface

Copyright Statement

This guide may not be reproduced in any form or by any means to create any derivative such as translation, transformation, or adaptation without the prior written permission of Xiamen Milesight IoT Co., Ltd (Hereinafter referred to as Milesight).

Milesight reserves the right to change this guide and the specifications without prior notice. The latest specifications and user documentation for all Milesight products are available on our official website http://www.milesight.com

Safety Instruction

These instructions are intended to ensure that user can use the product correctly to avoid danger or property loss. Milesight will not shoulder responsibility for any loss or damage resulting from not following the instructions of this operating guide.

CAUTION:
Injury or equipment damage may be caused if any of these cautions are neglected.

- The device must not be modified in any way.
- In order to protect the security of the device, please change device the password when first configuration. The default password is 123456.
- Do not place the device close to objects with naked flames.
- Do not place the device where the temperature is below/above the operating range.
- When installing the battery, please install it accurately, and do not install the reverse or wrong model.
- Remove the battery if the device will not be used for a period of time. Otherwise, the battery will leak and damage the device.
- The device must never be subjected to shocks or impacts.
- **This product is intended to provide a convenient call or control function, but should not be used as the sole emergency response tool. In an emergency, you should take appropriate measures to ensure your own safety. For details please refer to Disclaimer and Important Information.**

Revision History

Release Date	Version	Description
July 12, 2021	V 1.0	Initial version
Dec. 7, 2021	V 1.1	1. Add Milesight D2D controller feature; 2. Delete low power alarm interval, device only uplinks once when battery level drops to 1%.
Nov. 30, 2022	V 1.2	1. Support double press enable or disable; 2. Add downlink commands; 3. Support LoRa uplink when Milesight D2D is enabled.

Chapter 2. Product Introduction

Overview

WS101 is a LoRaWAN®-based smart button for wireless controls, triggers and alarms[1]. WS101 supports multiple press actions, all of which can be defined by the user to control devices or trigger scenes. Besides, Milesight also provides a red button that is primarily used to send SOS alarms. Compact and battery-powered, WS101 is easy to install and carry everywhere. Compliant with Milesight LoRaWAN® gateways and Milesight Development Platform solutions, users can know the alarms and use the WS101 to easily trigger other sensors or appliances remotely.

WS101 can be widely used in smart homes, smart offices, hotels, schools, etc.

Features

- Support multiple press actions to control devices, trigger a scene or send emergency alarms
- Easily to install or carry with the convenient size
- Built-in LED indicator and buzzer for press actions, network status, low battery indication
- Ultra-wide-distance wireless transmission: 15 km in line of sight scene
- Equipped with NFC for one-touch configuration and support card emulation mode
- Support Milesight D2D protocol to enable ultra-low latency and directly control without gateway
- Function well with standard LoRaWAN® gateways and network servers
- Compliant with Milesight IoT Cloud and Milesight Development Platform

Chapter 3. Hardware Introduction

Packing List

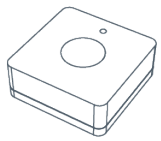

1 × WS101 Device

2 × Wall Mounting Kits

1 × Quick Guide

1 × Warranty Card

Note:
If any of the above items is missing or damaged, please contact your sales Representative.

Hardware Overview

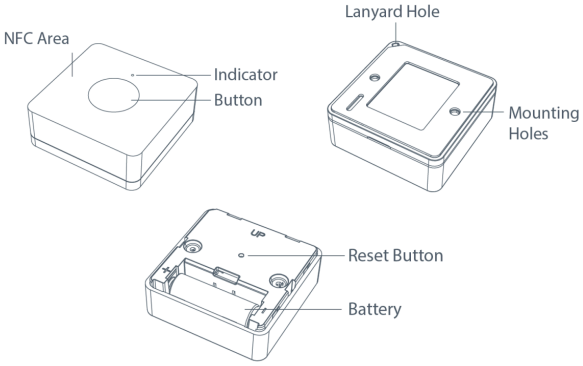

Button and LED Indicator

The device equips with a LED indicator to indicate the network status and reset button features.

Function	Action	LED Indicator
Network Status	Send join network requests	Red, blinks once
	Joined the network successfully	Green, blinks twice
Reboot	Press and hold the reset button for more than 3s	Slowly blinks

Function	Action	LED Indicator
Reset to Factory Default	Press and hold the button for more than 10 seconds.	Quickly blinks

Dimensions(mm)

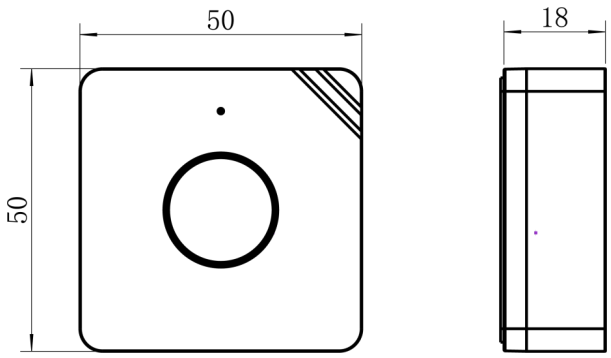

Chapter 4. Quick Start

This chapter describes how to access the status and configuration page of the device.

Access the Sensor via NFC

1. Pull out the battery insulating sheet to power on the device. The indicator will light up in green for 3 seconds when device turns on.

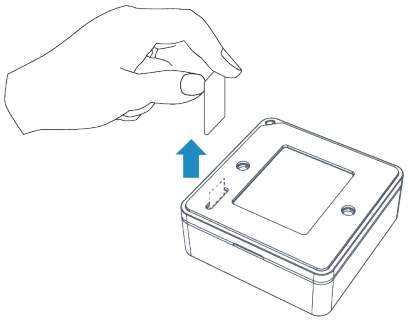

2. Download and install “Milesight ToolBox” App from Google Play or Apple Store on an NFC-supported smartphone.

3. Enable NFC function on the smartphone.

4. Launch Milesight ToolBox, and select the default mode as NFC.

5. Attach the smart phone with NFC area to the device and click to read device information. Basic information, data, and settings of the device will be shown on the Milesight ToolBox App if it’s recognized successfully.

6. Adjust the settings on the App, then attach the smartphone with NFC area to the device and click **Write** to write the settings. After writing, reread the device to check if the configuration is written well.

Note:

- Ensure the location of smartphone NFC area and it's recommended to take off phone case.
- If the smart phone fails to read/write configurations via NFC, keep the phone away and back to try again.
- The default device password is 123456. Please change a new password for security.

Configure the Network Setting

1. Go to **Network** settings page, select the join type as OTAA or ABP as required.

Note:
OTAA mode is required if you connect device to Milesight IoT Cloud or Milesight Development Platform.

2. Select supported frequency the same as LoRaWAN® gateway.

Note:
Set the channel index as 8-15 for US915 or AU915 if using default settings of Milesight gateways.

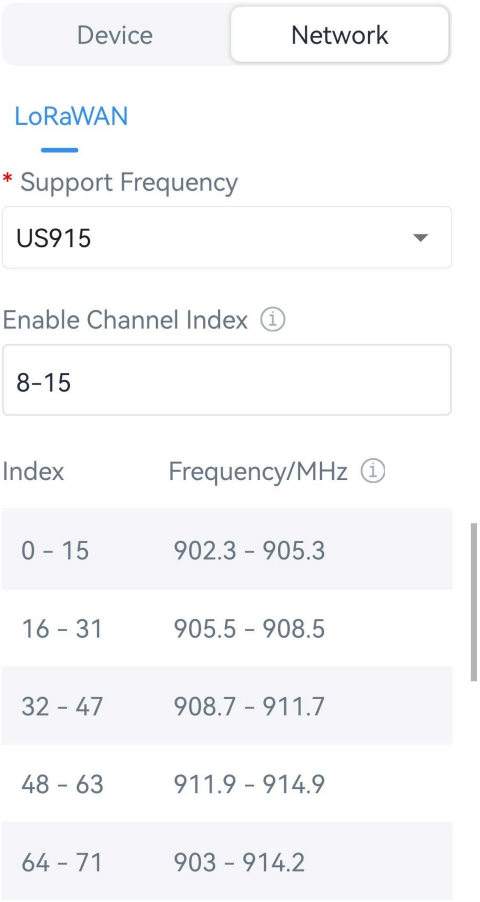

3. Keep other settings by default and click **Write** to save the settings.

Chapter 5. Operation Guide

Button Mode

WS101 provides 3 kinds of pressing actions allowing users to define different alarms. Please refer to Button Message for detailed message of every action.

Mode	Action
Mode 1	Short press the button (≤3 seconds).
Mode 2	Long press the button (>3 seconds).
Mode 3	Double press the button (press interval is within 3 seconds).

LoRaWAN® Settings

This chapter describes the LoRaWAN® network settings of device.

Parameter	Description
Device EUI	Unique ID of the device which can be found on the device. **Note:** please contact sales for device EUI list if you have many units.
App EUI	The default App EUI (join EUI) is 24E124C0002A0001.
Application Port	The port used for sending and receiving data, the default port is 85.
LoRaWAN® Version	V1.0.2, V1.0.3, V1.1 are available.
Work Mode	It's fixed as Class A.
Confirmed Mode	If the device does not receive ACK packet from network server, it will resend data once.
Join Type	OTAA and ABP mode are available.

Parameter	Description
	Note: it's necessary to select OTAA mode if connecting device to Milesight IoT Cloud or Milesight Development Platform.
Application Key	Appkey for OTAA mode, default value: "Device EUI" + "Device EUI" (since Q4 of 2025). Example: 24e124123456789024e1241234567890 **Note:** • The default value of earlier devices is 5572404C696E6B4C6F52613230313823. • Please contact sales before purchase if you require random App Keys.
Network Session Key	Nwkskey for ABP mode, the default is 5572404C696E6B4C6F52613230313823.
Application Session Key	Appskey for ABP mode, the default is 5572404C696E6B4C6F52613230313823.
Device Address	DevAddr for ABP mode, default is the 5th to 12th digits of SN.
Rejoin Mode	Reporting interval≤35 mins: the device will send a specific number of Link-CheckReq MAC packets to the network server every reporting interval or every double reporting interval to validate connectivity; If there is no response, the device will re-join the network. Reporting interval > 35 mins: the device will send a specific number of Link-CheckReq MAC packets to the network server every reporting interval to validate connectivity; If there is no response, the device will re-join the network.

Parameter	Description
	Note: 1. Only OTAA mode supports rejoin mode. 2. The actual sending number is **Set the number of packets sent** +1.
Supported Frequency	Enable or disable the frequency to send uplinks. If frequency is one of CN470/AU915/US915, enter the index of the channel to enable in the input box, making them separated by commas. **Examples:** 1, 40: Enabling Channel 1 and Channel 40 1-40: Enabling Channel 1 to Channel 40 1-40, 60: Enabling Channel 1 to Channel 40 and Channel 60 All: Enabling all channels Null: Indicate that all channels are disabled
ADR Mode	Enable or disable network server to adjust Spreading Factor, Bandwidth an Tx Power to optimize data rates, airtime and energy consumption in the network.
Spreading Factor	If ADR mode is disabled, the device will send uplink data following this SF parameter. The higher the spreading factor, the longer the transmission distance, the slower the transmission speed and the more the consumption.
Tx Power	Tx power (transmit power) refers to the strength of the outgoing signal transmitted by the device. This is defined by LoRa alliance.
RX2 Data Rate	RX2 data rate to receive downlinks or send D2D commands.
RX2 Frequency	RX2 frequency to receive downlinks or send D2D commands. Unit: Hz

General Settings

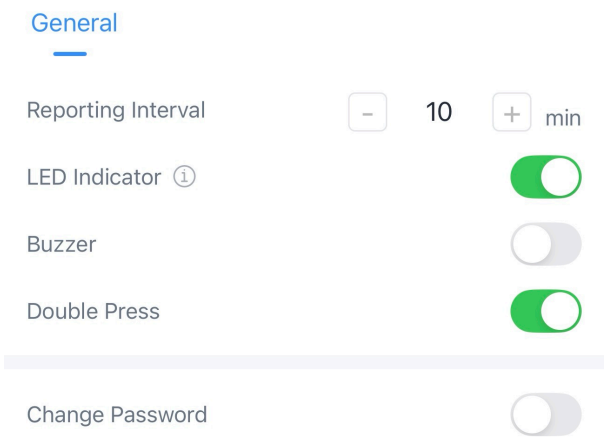

Parameters	Description
Reporting Interval	Reporting interval of battery level to network server. Default: 1080min, Range: 1-1080 mins
LED Indicator	Enable or disable the LED indicating. **Note:** The indicator of reset feature is not allowed to disable.
Buzzer	The buzzer will be triggering together with indicator if the device is registered to network.
Double Press	Enable or disable double press mode. **Note:** If double press is disabled, double press settings under Milesight D2D will also be hidden.
Change Password	Change the password for ToolBox App to write this device.

Milesight D2D Setting

Milesight D2D protocol is developed by Milesight and used for setting up transmission among Milesight devices without gateway. When the Milesight D2D settings is enabled, the device can work as a D2D controller to send control commands to trigger Milesight D2D agent devices.

1. Configure the RX2 datarate and RX2 frequency.

Note:
It is suggested to change the default values if there are many LoRaWAN® devices around.

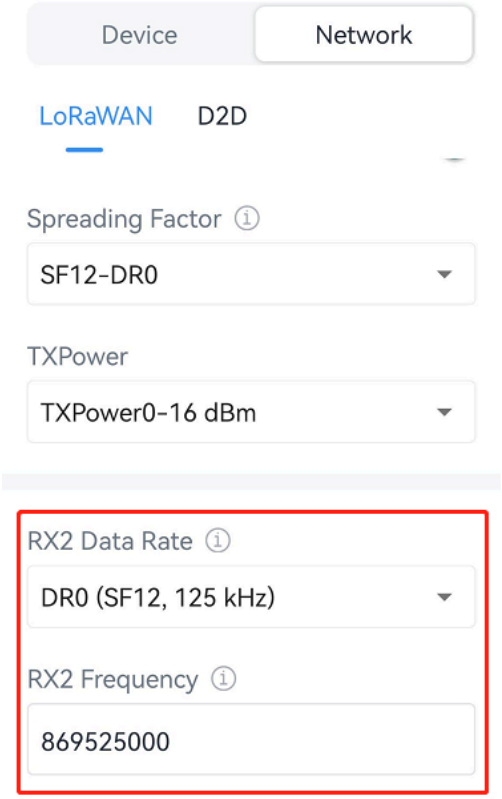

2. Enable Milesight D2D feature and define a unique D2D key that is the same as Milesight D2D agent devices. (Default D2D key: 5572404C696E6B4C6F52613230313823)

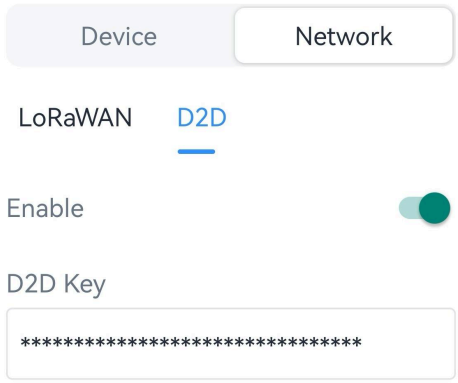

3. Enable one of WS101 button mode and configure a 2-byte hexadecimal command (This command is pre-defined in Milesight D2D agent device). When WS101 is pressed according to specific button mode, it will send the control command to corresponding Milesight D2D agent devices.

Note:
If you enable **LoRa Uplink**, a LoRaWAN® uplink packet that contains corresponding alarm status will be sent to gateway after the Milesight D2D command packet. Otherwise, the alarm packet will not send to LoRaWAN® gateway.

Example: When short pressing the button, the device will send the command 0001 to Milesight D2D agent devices.

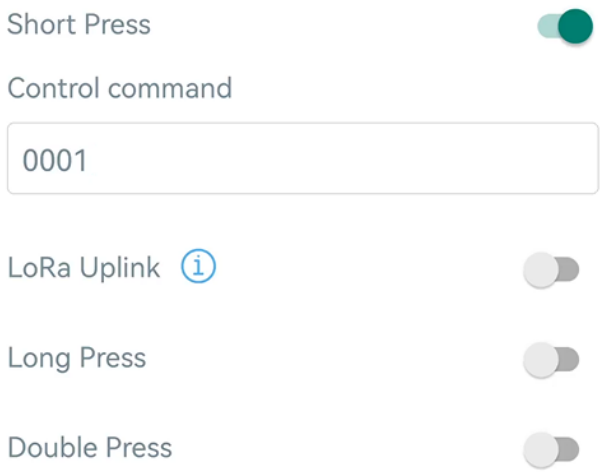

Maintenance

Upgrade

This chapter describes the steps to upgrade the device via ToolBox App.

1. Download firmware from Milesight official website to your smartphone.
2. Read the target device via ToolBox App, click **Upgrade** to upload the firmware file.
3. Click **Upgrade** to upgrade the device.

Note:

- Operation on ToolBox is not supported during an upgrade.
- Only Android version ToolBox supports the upgrade feature.

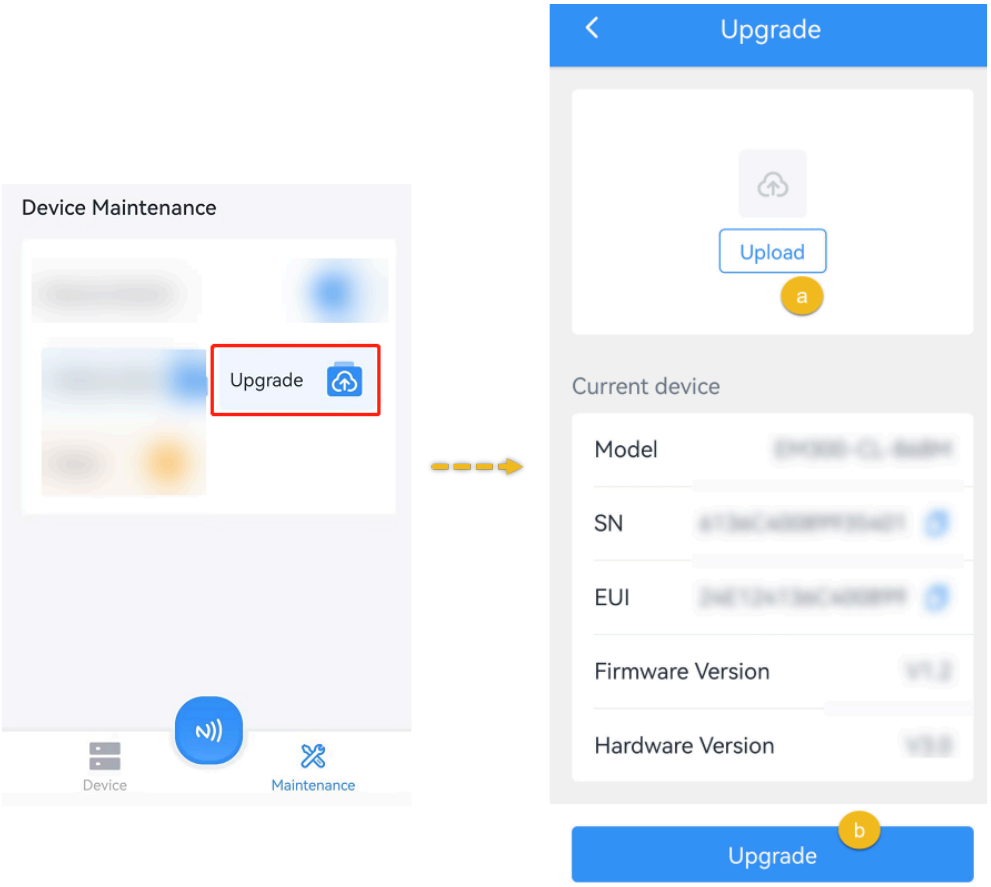

Backup and Restore

This device supports configuration backup for easy and quick device configuration in bulks. Backup and restore is allowed only for devices with the same model and frequency band.

Backup and Restore

1. Launch ToolBox App, attach the NFC area of smartphone to the device to read the configuration.

2. Edit the configuration as required, click **Set Template** to save current configuration as a template to the ToolBox App.

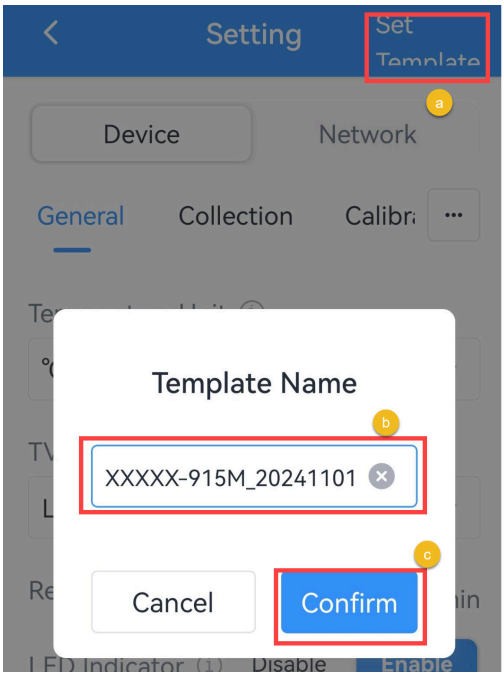

3. Go to **Device >Template** page.

4. Select and click the target template, click **Write** to import the configuration to target devices.

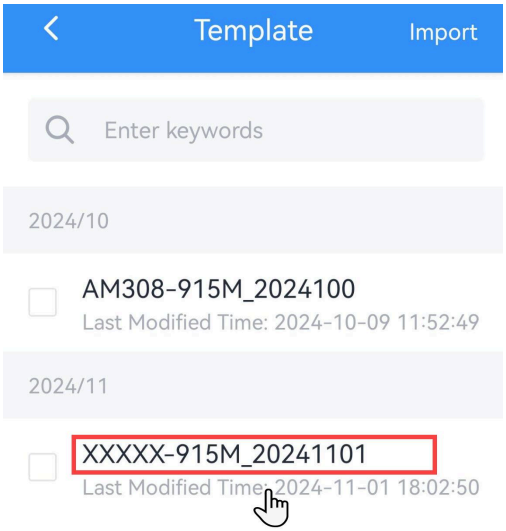

Export and Delete Template

1. Check the box of the target template.

2. Click **Export** to export this template as JSON format file and save it to the smartphone, click **Delete** to delete this template from your ToolBox App.

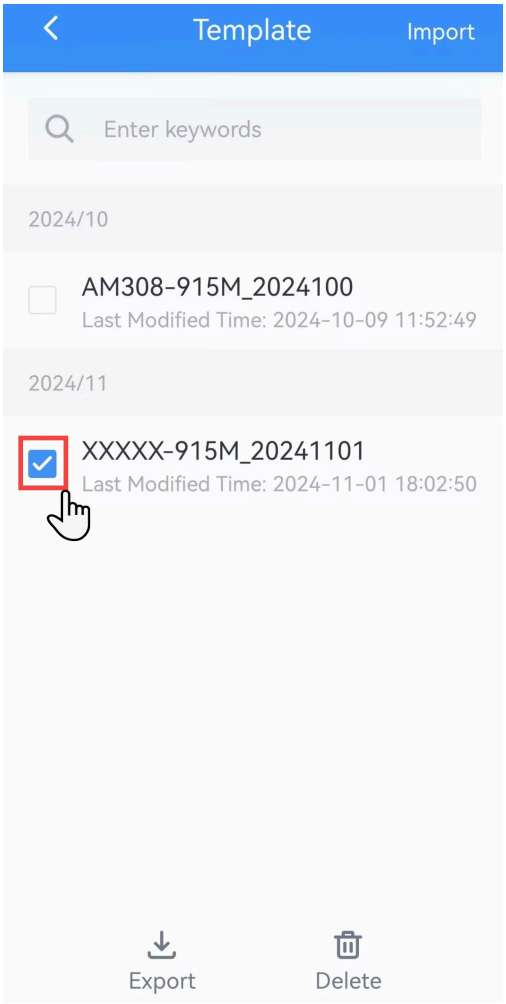

Reset to Factory Default

Via Hardware: Hold on the reset button for more than 10s until the LED indicator quickly blinks.

Via ToolBox App: Click **Reset** and attach the smartphone to device to reset the device.

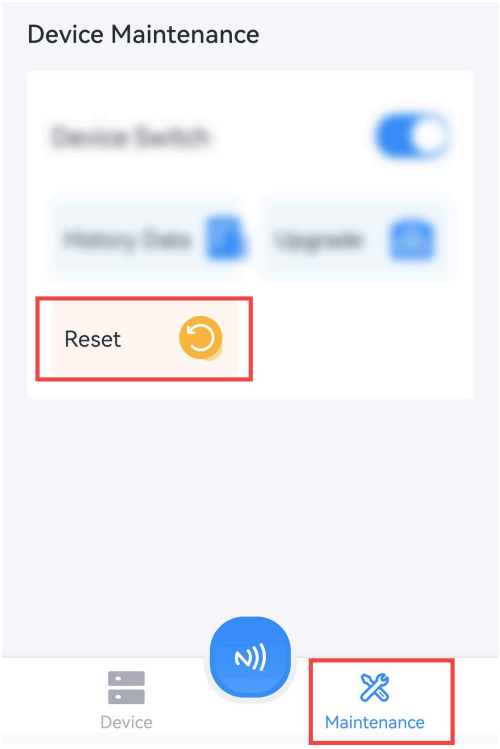
Device Maintenance
Reset
Device
Maintenance

Chapter 6. Installation

3M Tapes Fix

Paste 3M tape to the back of the button, then tear the other side and place it on a flat surface.

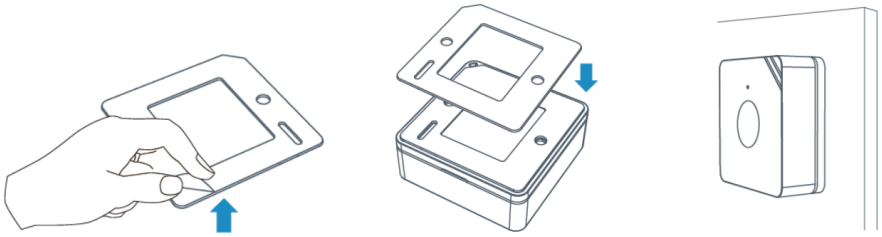

Screw Fix

Remove the back cover of the button, screw the wall plugs into the wall and fix the cover with screws on it, then install back the device.

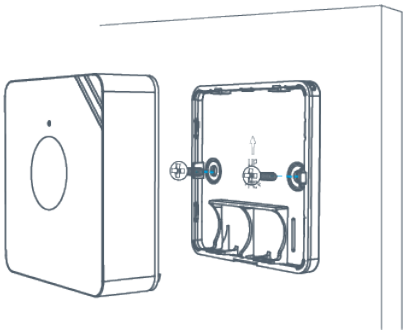

Lanyard

Pass the lanyard through the aperture near the edge of the button, then you can hang the button onto keychains and the like.

Chapter 7. Battery Replacement

Use a screwdriver to remove the back cover and insert the battery correctly. After inserting the battery, the indicator will light up in green for 3 seconds when the device turns on.

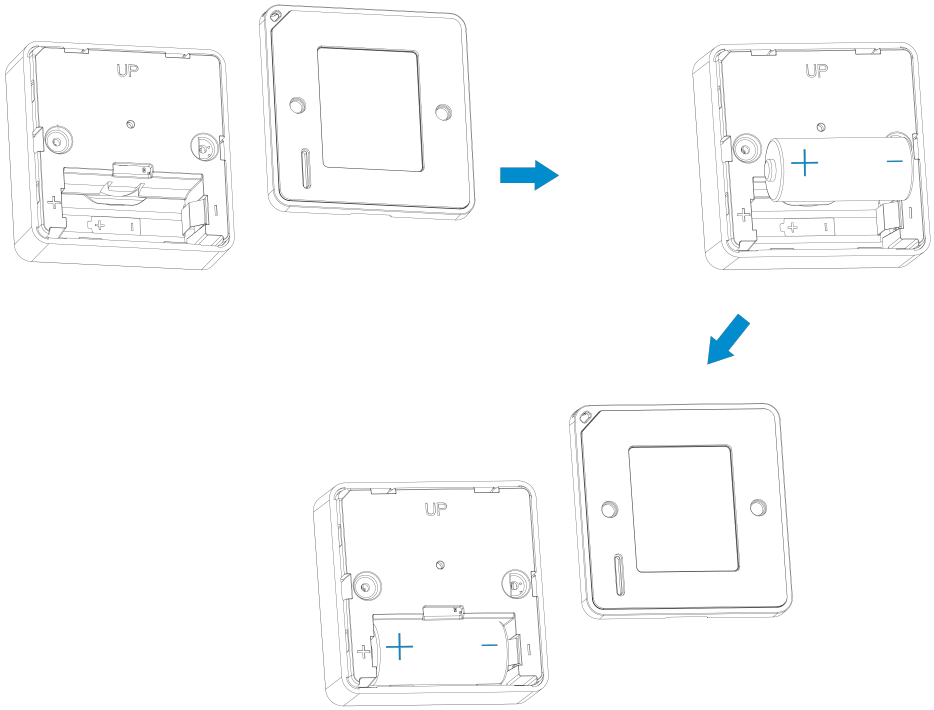

Note:

1. The device can only be powered by ER14335 Li-$SOCl_2$ battery not alkaline batteries.
2. Ensure the battery direction is not reversed.
3. Ensure all replacing batteries are newest; otherwise it may shorten battery life or cause inaccurate power calculation.
4. The battery should be removed from the device if it is not used for an expended period.

Chapter 8. Uplink and Downlink

Overview

All messages are based on following format (HEX), the Data field should follow little-endian:

Channel1	Type1	Data1	Channel2	Type2	Data2	Channel3	...
1 Byte	1 Byte	N Bytes	1 Byte	1 Byte	N Bytes	1 Byte	...

For decoder examples please find files on https://github.com/Milesight-IoT/SensorDecoders.

Uplink Data

This chapter describes the reported data of the device.

Basic Information

The device will report a basic information packet whenever joining the network.

Item	Channel	Type	Byte	Description
Power On	ff	0b	1	Device is on
Protocol Version	ff	01	1	Example: 01=V1
Hardware Version	ff	09	2	Example: 03 10 = V3.1
Software Version	ff	0a	2	Example: 03 01 = V3.1
Device Type	ff	0f	1	00: Class A, 01: Class B, 02: Class C
Serial Number	ff	08	6	12 digits

Example:

ff0bff ff0101 ff086538b2232131 ff090100 ff0a0102 ff0f00		
Channel	**Type**	**Value**
ff	0b	Power On: ff
ff	01	Protocol Version: 01=V1

ff0bff ff0101 ff086538b2232131 ff090100 ff0a0102 ff0f00		
Channel	**Type**	**Value**
ff	08	Serial Number: 6538b2232131
ff	09	Hardware Version: 0100=V1.0
ff	0a	Software Version: 0102=V1.2
ff	0f	00: Class A

Button Message

WS101 reports button message when button is pressed.

Channel	Type	Byte	Description
ff	2e	1	01: Mode 1(short press) 02: Mode 2 (long press) 03: Mode 3 (double press)

Example:

ff2e01		
Channel	**Type**	**Value**
ff	2e	01 => short press

Battery Level Report

The device reports battery level according to reporting interval. Besides, when battery level drops to 1%, it will upload battery packet once.

Channel	Type	Byte	Description
01	75	1	UINT8, Unit: %

Example:

017564		
Channel	**Type**	**Value**
01	75	64 => 100%

Downlink Command

This device supports downlink commands for configuration and control. The downlink application port is 85 by default.

Item	Channel	Type	Byte	Description
Reboot	ff	10	1	ff
Report Interval	ff	03	2	UINT16, Unit: s
LED Indicator	ff	2f	1	00: Disable, 01: Enable
Double Press Mode	ff	74	1	00: Disable, 01: Enable
Buzzer	ff	3e	1	00: Disable, 01: Enable

Example:

1. Reboot the device.

ff10ff

2. Set report interval as 20 minutes.

ff03b004		
Channel	**Type**	**Value**
ff	03	b004=>04b0=1200s=20 minutes

3. Disable double press mode.

ff7400		
Channel	**Type**	**Value**
ff	74	00 => Disable double press

Chapter 9. Services

Milesight provides customers with timely and comprehensive technical support services. End-users can contact your local dealer to obtain technical support. Distributors and resellers can contact directly with Milesight for technical support.

Technical Support Mailbox: iot.support@milesight.com

Online Support Portal: https://support.milesight-iot.com

Resource Download Center: https://www.milesight.com/iot/resources/download-center/

MILESIGHT CHINA

TEL: +86-592-5085280

FAX: +86-592-5023065

Add: Building C09, Software Park Phase III, Xiamen 361024, Fujian, China