Milesight

WS1x6

Smart Scene Panel

User Guide

14 rue Edouard Petit
42000 St-Etienne

Tel : +33 477 92 03 56
Email : contact@rg2i.com

www.rg2i.com

Contents

Chapter 1. Preface 4

Copyright Statement 4

Safety Instruction 4

Revision History 4

Chapter 2. Product Introduction 6

Overview 6

Features 6

Chapter 3. Hardware Introduction 7

Packing List 7

Hardware Overview 7

LED Patterns 7

Dimensions(mm) 8

Chapter 4. Quick Start 9

Access the Sensor via NFC 9

Configure the Network Setting 10

Chapter 5. Operation Guide 12

LoRaWAN® Settings 12

General Settings 15

Milesight D2D Setting 15

E-ink Display Settings (WS156 Only) 17

Maintenance 19

Upgrade 19

Backup and Restore 20

Reset to Factory Default 22

Chapter 6. Installation 24

Chapter 7. Uplink and Downlink 25

Overview 25

Uplink Data.....25
Basic Information.....25
Button Message.....26
Battery Level Report.....27
Downlink Command.....27
General Settings.....27
D2D Settings.....28
Chapter 8. Services.....30

Chapter 1. Preface

Copyright Statement

This guide may not be reproduced in any form or by any means to create any derivative such as translation, transformation, or adaptation without the prior written permission of Xiamen Milesight IoT Co., Ltd (Hereinafter referred to as Milesight).

Milesight reserves the right to change this guide and the specifications without prior notice. The latest specifications and user documentation for all Milesight products are available on our official website http://www.milesight.com

Safety Instruction

These instructions are intended to ensure that user can use the product correctly to avoid danger or property loss. Milesight will not shoulder responsibility for any loss or damage resulting from not following the instructions of this operating guide.

CAUTION:
Injury or equipment damage may be caused if any of these cautions are neglected.

- The device must not be modified in any way.
- In order to protect the security of the device, please change device the password when first configuration. The default password is 123456.
- Do not place the device close to objects with naked flames.
- Do not place the device where the temperature is below/above the operating range.
- The device must never be subjected to shocks or impacts.

Revision History

Release Date	Version	Description
Oct. 19, 2021	V 1.0	Initial version
Aug. 1, 2022	V 1.1	1. Change insulating sheet place 2. Change RX2 setting place

Release Date	Version	Description
Jan. 16, 2023	V 1.2	1. Add Single-Channel Mode; 2. Add Milesight D2D LoRa Uplink feature; 3. Add reboot downlink command.
Jan.16, 2024	V 1.3	1. Add button active mode; 2. Update button uplink content; 3. Add downlink command for confirmed mode.

Chapter 2. Product Introduction

Overview

WS136 & WS156 LoRaWAN® Smart Scene Panel gives a multi button control panel that can simply activate different pre-defined scenes with one-press. Without any additional cable, WS136 & WS156 can be easily installed anywhere and used to control devices via LoRaWAN® or Milesight D2D communication protocol. Besides, it's equipped a user-defined E-ink screen to suit different scenes. Compliant with Milesight LoRaWAN® gateway and Milesight IoT Cloud solution, WS136 & WS156 can be linked to control another Milesight devices without any development.

WS136 & WS156 can be widely used for wireless control in smart office, smart home and hotel multi-scene controls, etc.

Features

- Equipped with a programmable E-ink screen for flexible display
- Up to 6 scenes settable, each scene can consist of multiple devices
- Equipped with NFC for one-touch configuration, supporting card emulation mode
- Support Milesight D2D protocol to enable ultra-low latency and directly control without gateway
- Compliant with standard LoRaWAN® gateways and network servers
- Compliant with Milesight IoT Cloud
- Easy installation and multiple installation ways without wiring

Chapter 3. Hardware Introduction

Packing List

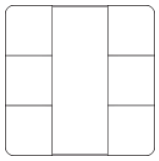

1 × WS136 or WS156 Device

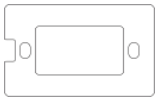

1 × 3M Tape

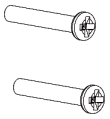

2 × Mounting Screws

1 × Quick Guide

1 × Warranty Card

Note:
If any of the above items is missing or damaged, please contact your sales Representative.

Hardware Overview

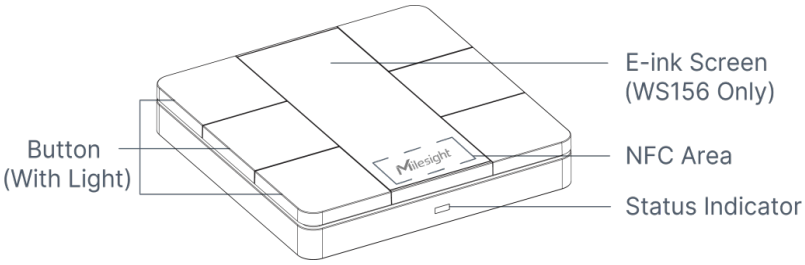

Note:
For WS136, the E-ink screen is replaced by PVC sticker and the icons on the sticker supports customization.

LED Patterns

Indicator	Action	Indication
Button Light	Press the button	Always on until the button is being released
Status Indicator	Send join network requests	Blinks as requests

Indicator	Action	Indication
	Joined the network successfully	Blinks twice
	Receive ACK packages from NS	Blinks once

Dimensions(mm)

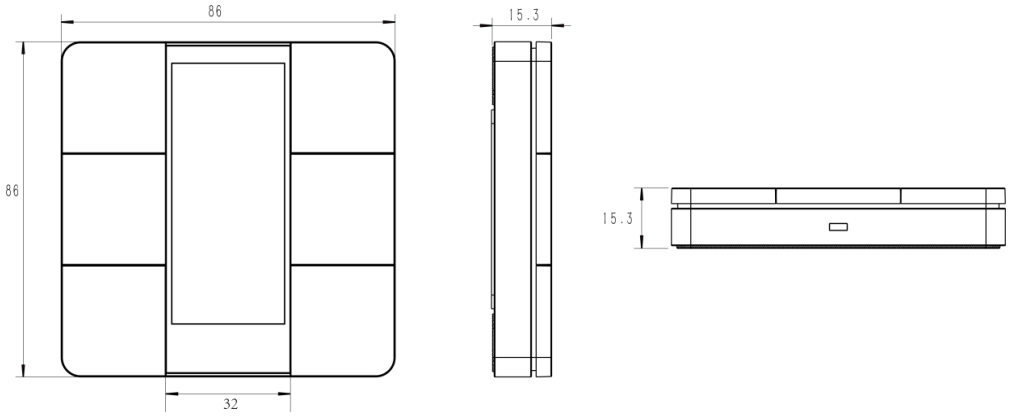

Chapter 4. Quick Start

Access the Sensor via NFC

1. Pull out the battery insulating sheet to power on the device.

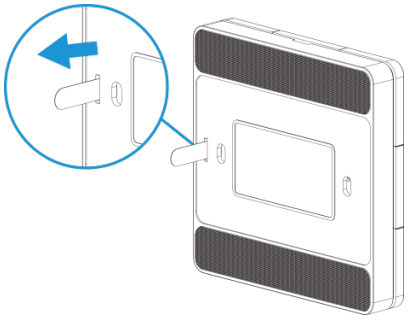

2. Download and install “Milesight ToolBox” App from Google Play or Apple Store on an NFC-supported smartphone.

3. Enable NFC function on the smartphone.

4. Launch Milesight ToolBox, and select the default mode as NFC.

5. Attach the smart phone with NFC area to the device and click to read device information. Basic information, data, and settings of the device will be shown on the Milesight ToolBox App if it’s recognized successfully.

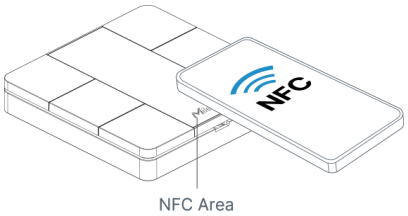

6. Adjust the settings on the App, then attach the smartphone with NFC area to the device and click **Write** to write the settings. After writing, reread the device to check if the configuration is written well.

Note:

- Ensure the location of smartphone NFC area and it's recommended to take off phone case.
- If the smart phone fails to read/write configurations via NFC, keep the phone away and back to try again.
- The default device password is 123456. Please change a new password for security.

Configure the Network Setting

1. Go to **Network** settings page, select the join type as OTAA or ABP as required.

Note:
OTAA mode is required if you connect device to Milesight IoT Cloud.

2. Select supported frequency the same as LoRaWAN® gateway.

Note:
Set the channel index as 8-15 for US915 or AU915 if using default settings of Milesight gateways.

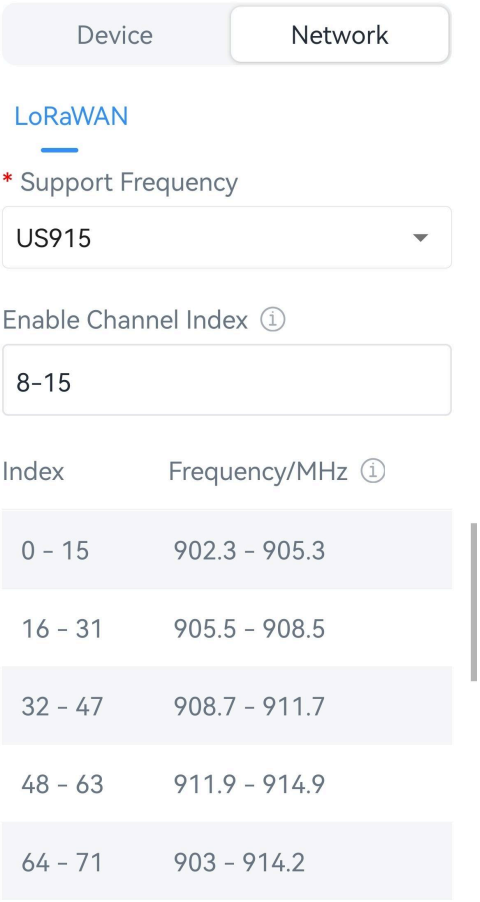

3. Keep other settings by default and click **Write** to save the settings.

Chapter 5. Operation Guide

LoRaWAN® Settings

This chapter describes the LoRaWAN® network settings of device.

Parameter	Description
Device EUI	Unique ID of the device which can be found on the device. **Note:** please contact sales for device EUI list if you have many units.
App EUI	The default App EUI (join EUI) is 24E124C0002A0001.
Application Port	The port used for sending and receiving data, the default port is 85.
LoRaWAN® Version	V1.0.2 and V1.0.3 are available.
Work Mode	It's fixed as Class A.
Confirmed Mode	If the device does not receive ACK packet from network server, it will resend data once.
Join Type	OTAA and ABP mode are available. **Note:** it's necessary to select OTAA mode if connecting device to Milesight IoT Cloud.
Application Key	Appkey for OTAA mode, default value: "Device EUI" + "Device EUI" (since Q4 of 2025). Example: 24e124123456789024e1241234567890

Parameter	Description
	Note: • The default value of earlier devices is 5572404C696E6B4C6F52613230313823. • Please contact sales before purchase if you require random App Keys.
Network Session Key	Nwkskey for ABP mode, the default is 5572404C696E6B4C6F52613230313823.
Application Session Key	Appskey for ABP mode, the default is 5572404C696E6B4C6F52613230313823.
Channel Mode	Select Standard-Channel mode or Single-Channel mode. When Single-Channel mode is enabled, only one channel can be selected to send uplinks.
Device Address	DevAddr for ABP mode, default is the 5th to 12th digits of SN.
Rejoin Mode	Reporting interval≤35 mins: the device will send a specific number of LinkCheckReq MAC packets to the network server every reporting interval or every double reporting interval to validate connectivity; If there is no response, the device will re-join the network. Reporting interval > 35 mins: the device will send a specific number of LinkCheckReq MAC packets to the network server every reporting interval to validate connectivity; If there is no response, the device will re-join the network. **Note:** 1. Only OTAA mode supports rejoin mode. 2. The actual sending number is **Set the number of packets sent** +1.

Parameter	Description
Supported Frequency	Enable or disable the frequency to send uplinks. If frequency is one of CN470/AU915/US915, enter the index of the channel to enable in the input box, making them separated by commas. **Examples:** 1, 40: Enabling Channel 1 and Channel 40 1-40: Enabling Channel 1 to Channel 40 1-40, 60: Enabling Channel 1 to Channel 40 and Channel 60 All: Enabling all channels Null: Indicate that all channels are disabled
ADR Mode	Enable or disable network server to adjust Spreading Factor, Bandwidth an Tx Power to optimize data rates, airtime and energy consumption in the network.
Spreading Factor	If ADR mode is disabled, the device will send uplink data following this SF parameter. The higher the spreading factor, the longer the transmission distance, the slower the transmission speed and the more the consumption.
Tx Power	Tx power (transmit power) refers to the strength of the outgoing signal transmitted by the device. This is defined by LoRa alliance.
RX2 Data Rate	RX2 data rate to receive downlinks or send D2D commands.
RX2 Frequency	RX2 frequency to receive downlinks or send D2D commands. Unit: Hz

General Settings

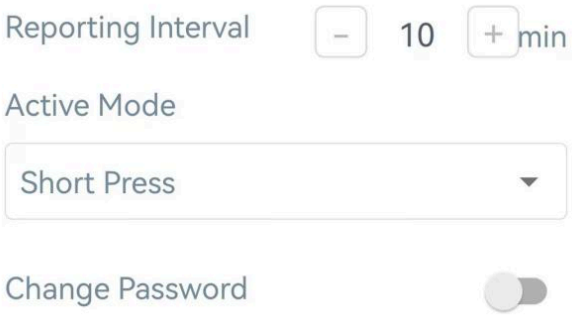

Parameters	Description
Reporting Interval	Reporting interval of battery level to network server. Default: 1080 min
Active Mode	Select the active mode of buttons. **Short press:** press once (≤1.5 seconds). **Double press:** press twice (press interval is within 1.5 seconds). **Long press:** press once (>1.5 seconds). Supported options: Short Press Short Press, Double Press Short Press, Long Press Short Press, Double Press, Long Press
Change Password	Change the password for ToolBox App to write this device.

Milesight D2D Setting

Milesight D2D protocol is developed by Milesight and used for setting up transmission among Milesight devices without gateway. When the Milesight D2D settings is enabled, the device can work as a D2D controller to send control commands to trigger Milesight D2D agent devices.

1. Configure the RX2 datarate and RX2 frequency.

Note:
It is suggested to change the default values if there are many LoRaWAN® devices around.

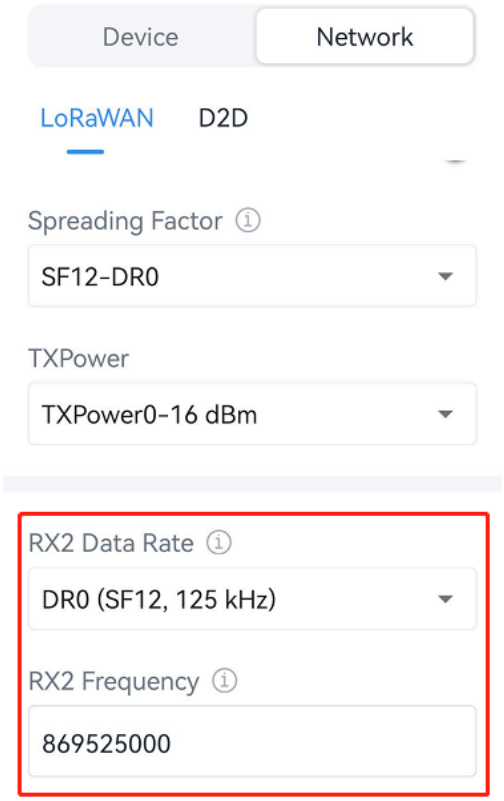

2. Enable Milesight D2D feature and define a unique D2D key that is the same as Milesight D2D agent devices. (Default D2D key: 5572404C696E6B4C6F52613230313823)

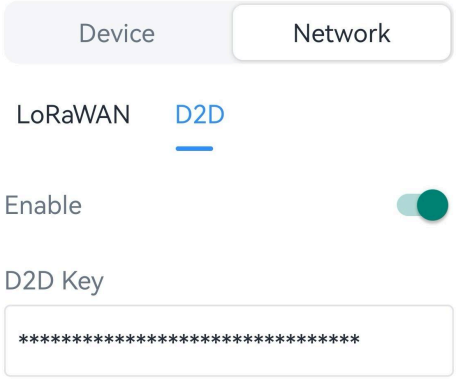

3. Enable any button and configure a 2-byte hexadecimal command (This command is pre-defined in Milesight D2D agent device). When the button is pressed, the device will send the control command to corresponding Milesight D2D agent devices.

> **Note:**
> If you enable **LoRa Uplink**, a LoRaWAN® uplink packet that contains corresponding alarm status will be sent to gateway after the Milesight D2D command packet. Otherwise, the alarm packet will not send to LoRaWAN® gateway.

Example: When short pressing the scenario button 1, the device will send the command 121 to Milesight D2D agent devices.

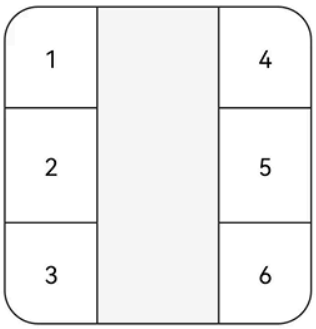

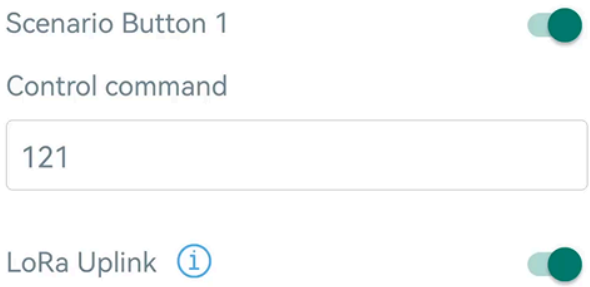

E-ink Display Settings (WS156 Only)

WS156 supports e-ink screen display content programming according to user requirements.

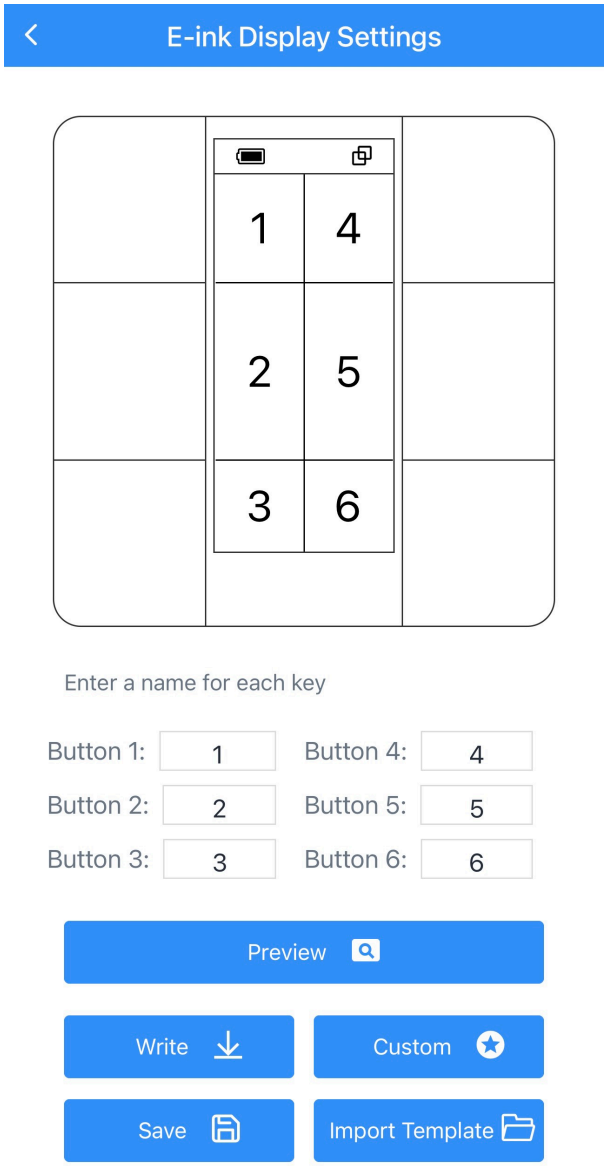

1. Every button shows 1 to 6 numbers by default. Users can modify these numbers to any characters or click **Custom** to import pictures. When importing pictures, the recommended resolution is 128*270.
2. After modifying or importing, click **Preview** to check the display result on the upper picture.
3. Click **Write**, then attach the smartphone with NFC area to the device to complete the screen programming.
4. Click **Save** to save the current display as a template in ToolBox App. You can import this template to another device by clicking **Import Template**.

Note:

1. WS156 e-ink screen will show below fixed icons:

Icon	Description
	Battery level
	The device joins the network.
	The device fails to join the network.

2. WS156 do a full-screen refresh once a week in order to remove ghosting.

Maintenance

Upgrade

This chapter describes the steps to upgrade the device via ToolBox App.

1. Download firmware from Milesight official website to your smartphone.
2. Read the target device via ToolBox App, click **Upgrade** to upload the firmware file.
3. Click **Upgrade** to upgrade the device.

Note:

- Operation on ToolBox is not supported during an upgrade.
- Only Android version ToolBox supports the upgrade feature.

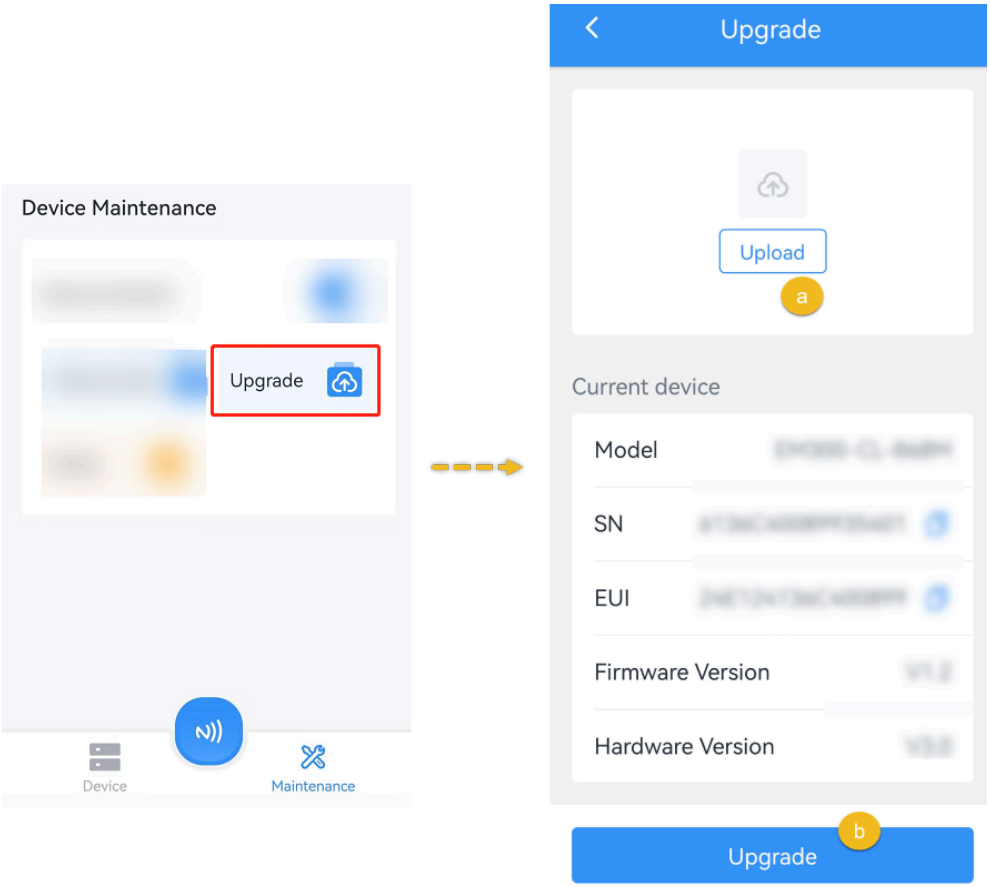

Backup and Restore

This device supports configuration backup for easy and quick device configuration in bulks. Backup and restore is allowed only for devices with the same model and frequency band.

Backup and Restore

1. Launch ToolBox App, attach the NFC area of smartphone to the device to read the configuration.

2. Edit the configuration as required, click **Set Template** to save current configuration as a template to the ToolBox App.

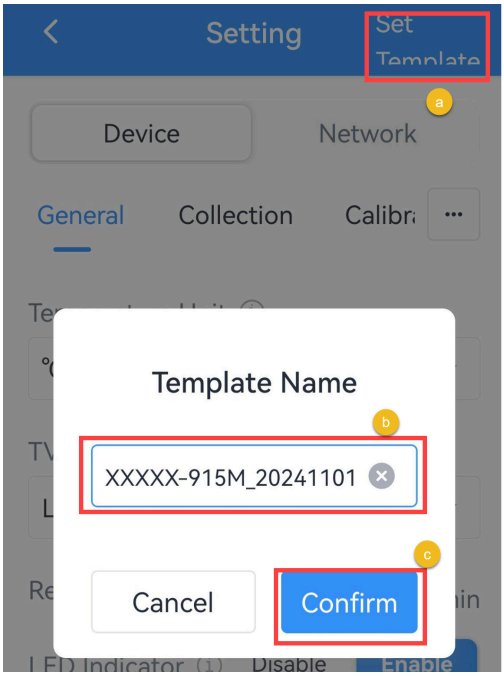

3. Go to **Device >Template** page.

4. Select and click the target template, click **Write** to import the configuration to target devices.

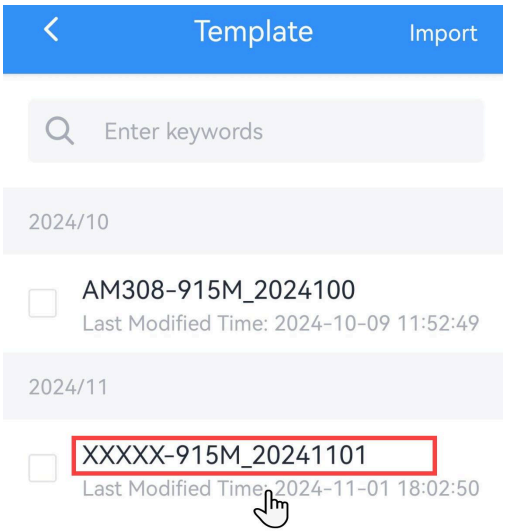

Export and Delete Template

1. Check the box of the target template.

2. Click **Export** to export this template as JSON format file and save it to the smartphone, click **Delete** to delete this template from your ToolBox App.

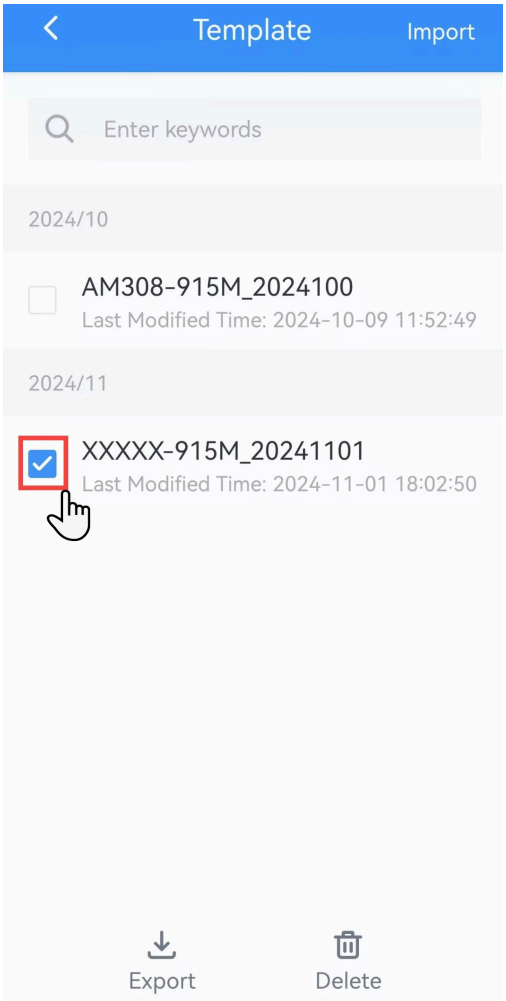

Reset to Factory Default

Via Hardware: Hold on the reset button for more than 10s until the LED indicator quickly blinks.

Via ToolBox App: Click **Reset** and attach the smartphone to device to reset the device.

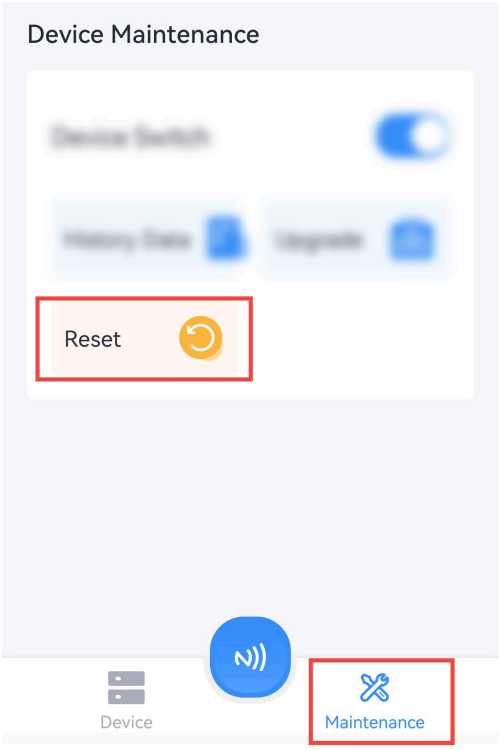
Device Maintenance
Reset
Device
Maintenance

Chapter 6. Installation

WS136 & WS156 can be placed on the desktop directly. If it needs to be fixed, please try below installation methods.

Fixed by 3M Tapes

Paste 3M tape to the back of the panel, then tear the other side and place it on a flat surface. Please note the screen direction when installing.

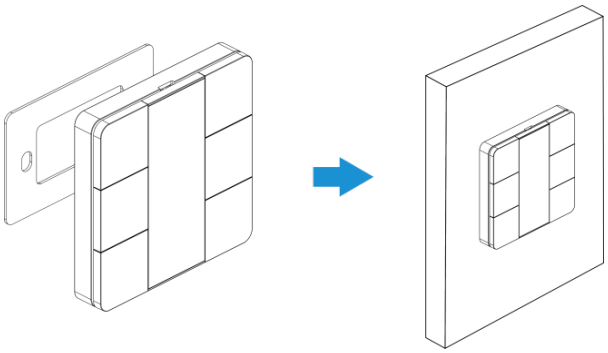

Fixed by 86 Box

Remove the back cover of the panel, screw the back cover to the 86 box with two M4 mounting screws, then install back the panel. Please note the screen direction when installing.

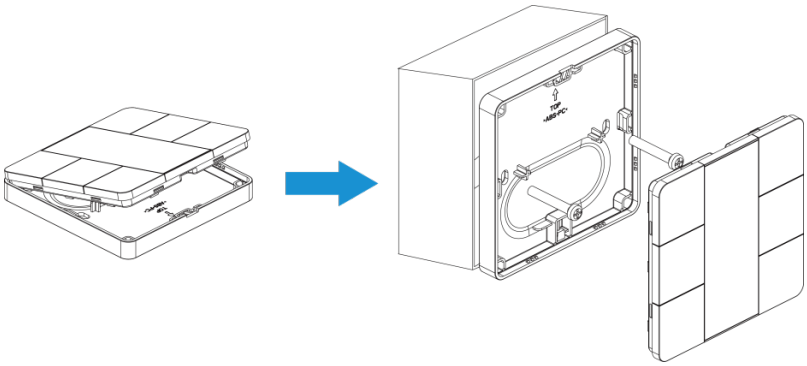

Chapter 7. Uplink and Downlink

Overview

All messages are based on following format (HEX), the Data field should follow little-endian:

Channel1	Type1	Data1	Channel2	Type2	Data2	Channel3	...
1 Byte	1 Byte	N Bytes	1 Byte	1 Byte	N Bytes	1 Byte	...

For decoder examples please find files on https://github.com/Milesight-IoT/SensorDecoders.

Uplink Data

This chapter describes the reported data of the device.

Basic Information

The device will report a basic information packet whenever joining the network.

Item	Channel	Type	Byte	Description
Power On	ff	0b	1	Device is on
Protocol Version	ff	01	1	Example: 01=V1
Hardware Version	ff	09	2	Example: 03 10 = V3.1
Software Version	ff	0a	2	Example: 03 01 = V3.1
Serial Number	ff	16	8	16 digits

Example:

ff0bffff0101ff166592b32851010013 ff090100 ff0a0102		
Channel	**Type**	**Value**
ff	0b	Power On: ff
ff	01	Protocol Version: 01=V1
ff	16	Serial Number: 6592b32851010013
ff	09	Hardware Version: 0100=V1.0
ff	0a	Software Version: 0102=V1.2

Button Message

The device will report the button message when button is pressed.

Item	Channel	Type	Description
Button Message	ff	34	Byte 1: Button Number Byte 2: Active Mode • 00=Short press • 01=Short press, Double press • 02=Short press, Long press • 03=Short press, Long press, Double press Byte 3: Trigger event • 00=Short press • 01=Double press • 02=Long press **Note:** if you press one button more than 6 times in a row, the 7th and follow-up messages will delay delivery.

Example:

Active mode is set to "Short Press, Double Press". When button 4 is short-pressed once:

ff 34 04 01 00		
Channel	**Type**	**Value**
ff	34	04 => Button 4 01=Short press, Double press 00=Short press trigger

Battery Level Report

The device reports battery level according to reporting interval. Besides, when battery level drops to 1%, it will upload battery packet once.

Channel	Type	Byte	Description
01	75	1	UINT8, Unit: %

Example:

017564		
Channel	**Type**	**Value**
01	75	64 => 100%

Downlink Command

This device supports downlink commands for configuration and control. The downlink application port is 85 by default.

Note:
Since the device type is class A, it only receives downlinks when the device upload battery level or button message to network server.

General Settings

Item	Channel	Type	Byte	Description
Reboot	ff	10	1	ff
Report Interval	ff	03	2	UINT16, Unit: s
Confirmed Mode	ff	c6	2	Byte 1: 00=disable, 01=enable Byte 2: ACK times, range: 1~5 **Note:** this only takes effect after the device reboots or rejoins the network.

Example:

1. Reboot the device.

ff10ff

2. Set reporting interval as 20 minutes.

ff03b004		
Channel	**Type**	**Value**
ff	03	b004=>04b0=1200s=20minutes

D2D Settings

Item	Channel	Type	Byte	Description
D2D Key	ff	35	8	The first 16 digits of D2D key, and the last 16 digits are fixed as 0.
Milesight D2D Spreading Factor and Frequency	ff	36	3	Byte 1: Spreading factor Byte 2-3: Frequency, unit: Hz

Example:

1. Set D2D Key as 12345678123456780000000000000000.

ff35 1234567812345678		
Channel	**Type**	**Value**
ff	35	1234567812345678

2. Set Milesight D2D spreading factor as DR5(SF7) and frequency as 505.7 MHz.

ff3605a05e241e		
Channel	**Type**	**Value**
ff	36	Byte 1: 05 (DR5) Byte 2: a0 5e 24 1e => 1e 24 5e a0=505700000 Hz (505.7 MHz)

Chapter 8. Services

Milesight provides customers with timely and comprehensive technical support services. End-users can contact your local dealer to obtain technical support. Distributors and resellers can contact directly with Milesight for technical support.

Technical Support Mailbox: iot.support@milesight.com

Online Support Portal: https://support.milesight-iot.com

Resource Download Center: https://www.milesight.com/iot/resources/download-center/

MILESIGHT CHINA

TEL: +86-592-5085280

FAX: +86-592-5023065

Add: Building C09, Software Park Phase III, Xiamen 361024, Fujian, China