Milesight

WS202

PIR & Light Sensor

User Guide

14 rue Edouard Petit
42000 St-Etienne

Tel : +33 477 92 03 56
Email : contact@rg2i.com

www.rg2i.com

Contents

Chapter 1. Preface 4

Copyright Statement 4

Safety Instruction 4

Revision History 4

Chapter 2. Product Introduction 6

Overview 6

Features 6

Chapter 3. Hardware Introduction 7

Packing List 7

Hardware Overview 7

Dimensions (mm) 8

LED Patterns 8

Chapter 4. Quick Start 9

Power Supply 9

Access the Sensor via NFC 9

Configure the Network Setting 10

Chapter 5. Operation Guide 12

LoRaWAN® Settings 12

General Settings 15

Time Synchronization 15

Threshold Settings 16

Milesight D2D Settings 17

Maintenance 19

Upgrade 19

Backup and Restore 20

Reset to Factory Default 22

Chapter 6. Installation 24

PIR Detection Area..... 24
Installation Note..... 24
Blocking Sticker Paste..... 24
3M Tapes Fix..... 25
Screw Fix..... 26
Chapter 7. Battery Replacement..... 27
Chapter 8. Uplink Packets and Downlink Commands..... 28
Overview..... 28
Uplink Packets..... 28
Basic Information..... 28
Periodic Report..... 29
Alarm Report..... 29
Downlink Commands..... 30
General Setting..... 30
Chapter 9. Services..... 32

Chapter 1. Preface

Copyright Statement

This guide may not be reproduced in any form or by any means to create any derivative such as translation, transformation, or adaptation without the prior written permission of Xiamen Milesight IoT Co., Ltd (Hereinafter referred to as Milesight).

Milesight reserves the right to change this guide and the specifications without prior notice. The latest specifications and user documentation for all Milesight products are available on our official website http://www.milesight.com

Safety Instruction

These instructions are intended to ensure that user can use the product correctly to avoid danger or property loss. Milesight will not shoulder responsibility for any loss or damage resulting from not following the instructions of this operating guide.

CAUTION:
Injury or equipment damage may be caused if any of these cautions are neglected.

- The device is not intended to be used as a reference sensor, and Milesight will not should responsibility for any damage which may result from inaccurate readings.
- The device must not be disassembled or remodeled in any way.
- Do not place the device close to objects with naked flames.
- Do not place the device where the temperature is below/above the operating range.
- Make sure electronic components do not drop out of the enclosure while opening.
- When installing the battery, please install it accurately, and do not install the reverse or wrong model.
- The device must never be subjected to shocks or impacts.
- In order to protect the security of the device, please change device password when first configuration. The default password is 123456.

Revision History

Release Date	Version	Revision Content
Jul. 15, 2021	V 1.0	Initial version

Release Date	Version	Revision Content
Sept. 10, 2021	V 1.1	1. Add Milesight D2D feature; 2. Support light collection enabled/disabled; 3. Delete low power alarm interval, device only uplinks once when battery level is lower than 10%.
Jan. 16, 2023	V 1.2	1. Add Single-Channel mode; 2. Add Milesight D2D LoRa Uplink feature. 3. Add reboot downlink command.
May 15, 2023	V 1.3	Add blocking stickers

Chapter 2. Product Introduction

Overview

Milesight WS202 is a LoRaWAN® PIR sensor based on passive infrared technology to detect a motion or occupancy. WS202 can detect whether there is movement within the range of 6-8 m and send the changes via LoRaWAN® network. Besides, WS202 equips with light sensor which can link PIR detection results to trigger scenes. With compact size and powered battery, WS202 is easy to install everywhere. Compliant with Milesight Development Platform, users can know the alarms or occupancy of rooms and trigger other sensors or appliances remotely.

WS202 can be widely used in smart homes, smart offices, schools, warehouses, etc.

Features

- Occupancy or motion detection based on passive infrared and Fresnel Lens
- Easily to install with the convenient size
- Built-in light sensor, combine PIR sensor to achieve triggers
- Ultra-wide-distance wireless transmission up to line of sight of 15 km
- Equipped with NFC for one touch configuration, support card emulation mode
- Support Milesight D2D protocol to enable ultra-low latency and directly control without gateway
- Function well with standard LoRaWAN® gateways and network servers
- Compliant with Milesight IoT Cloud and Milesight Development Platform

Chapter 3. Hardware Introduction

Packing List

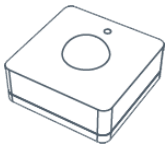

1 × WS202 Sensor

1 × 3M Tape

3 × Blocking Stickers

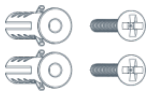

2 × Wall Mounting Kits

1 × Quick Guide

Note:

If any of the above items is missing or damaged, please contact your sales representative.

Hardware Overview

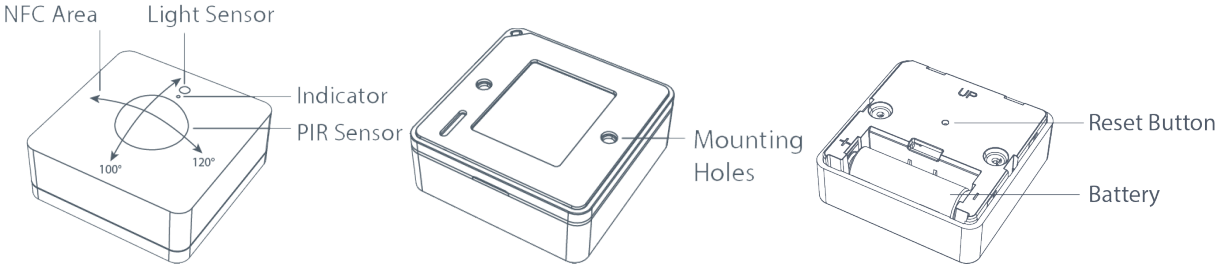

Dimensions (mm)

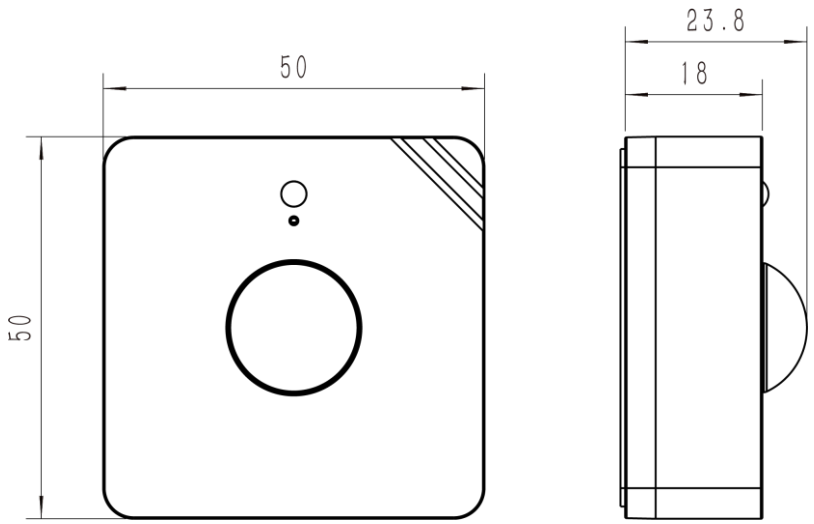

LED Patterns

Function	Action	LED Indicator
PIR Detection	PIR is triggered (network unregistered)	Red, blink once
	PIR is triggered (network registered)	Green, blink once
Network Status	Send join network requests	Red, blinks once
	Joined the network successfully	Green, blinks twice
Reboot	Press and hold the reset button for more than 3s	Slowly blinks
Reset to Factory Default	Press and hold the reset button for more than 10s	Quickly blinks

Chapter 4. Quick Start

Power Supply

Pull out the battery insulating sheet to power on the device. The indicator will light up in green for 3 seconds when the device turns on.

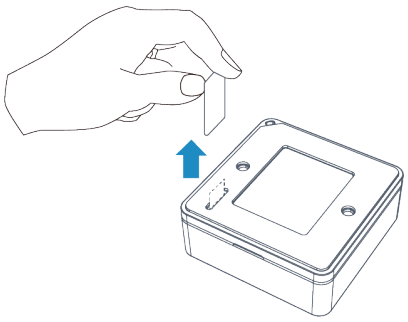

Access the Sensor via NFC

1. Download and install “Milesight ToolBox” App from Google Play or Apple Store on an NFC-supported smartphone.
2. Enable NFC function on the smartphone.
3. Launch Milesight ToolBox, and select the default mode as NFC.
4. Attach the smart phone with NFC area to the device and click to read device information. Basic information, data, and settings of the device will be shown on the Milesight ToolBox App if it’s recognized successfully.
5. Adjust the settings on the App, then attach the smartphone with NFC area to the device and click **Write** to write the settings. After writing, reread the device to check if the configuration is written well.

Note:

- Ensure the location of smartphone NFC area and it's recommended to take off phone case.
- If the smart phone fails to read/write configurations via NFC, keep the phone away and back to try again.
- The default device password is 123456. Please change a new password for security.

Configure the Network Setting

1. Go to **Network** settings page, select the join type as OTAA or ABP as required.

Note:
OTAA mode is required if you connect device to Milesight IoT Cloud or Milesight Development Platform.

2. Select supported frequency the same as LoRaWAN® gateway.

Note:
Set the channel index as 8-15 for US915 or AU915 if using default settings of Milesight gateways.

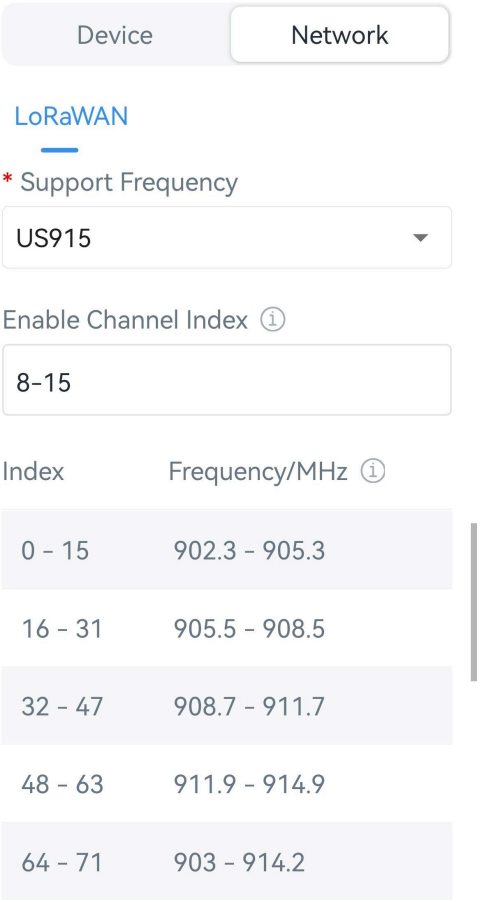

3. Keep other settings by default and click **Write** to save the settings.

Chapter 5. Operation Guide

LoRaWAN® Settings

Configure AppEUI, Join Type, Application Key, and other information. You can also keep all the default settings.

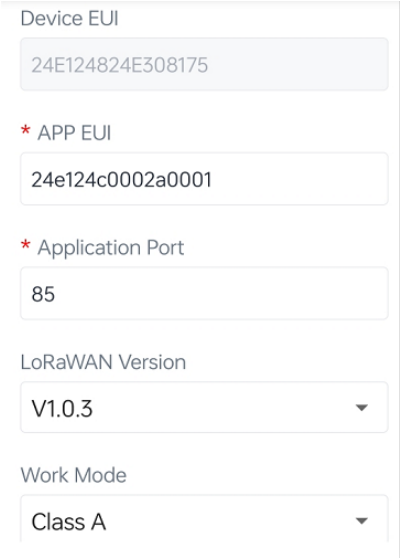

Parameters	Description
Device EUI	Unique ID of the device which can be found on the device. **Note:** please contact sales for device EUI list if you have many units.
App EUI	The default App EUI (join EUI) is 24E124C0002A0001.
Application Port	The port used for sending and receiving data, the default port is 85.
LoRaWAN® Version	V1.0.2 and V1.0.3 are available.
Work Mode	It's fixed as Class A.
Confirmed Mode	If the device does not receive ACK packet from network server, it will resend data once.
Join Type	OTAA and ABP mode are available.

Parameters	Description
	Note: it's necessary to select OTAA mode if connecting device to Milesight IoT Cloud or Milesight Development Platform.
Application Key	Appkey for OTAA mode, default value: "Device EUI" + "Device EUI" (since Q4 of 2025). Example: 24e124123456789024e1241234567890 **Note:** • The default value of earlier devices is 5572404C696E6B4C6F52613230313823. • Please contact sales before purchase if you require random App Keys.
Network Session Key	Nwkskey for ABP mode, the default is 5572404C696E6B4C6F52613230313823.
Application Session Key	Appskey for ABP mode, the default is 5572404C696E6B4C6F52613230313823.
Device Address	DevAddr for ABP mode, default is the 5th to 12th digits of SN.
Rejoin Mode	Reporting interval≤35 mins: the device will send a specific number of LinkCheckReq MAC packets to the network server every reporting interval or every double reporting interval to validate connectivity; If there is no response, the device will rejoin the network. Reporting interval > 35 mins: the device will send a specific number of LinkCheckReq MAC packets to the network server every reporting interval to validate connectivity; If there is no response, the device will re-join the network.

Parameters	Description
	Note: 1. Only OTAA mode supports rejoin mode. 2. The actual sending number is **Set the number of packets sent** +1.
Channel Mode	Select **Standard-Channel** mode or **Single-Channel** mode. When **Single-Channel** mode is enabled, only one channel can be selected to send uplinks.
Supported Frequency	Enable or disable the frequency to send uplinks. If frequency is one of CN470/AU915/US915, enter the index of the channel to enable in the input box, making them separated by commas. **Examples:** 1, 40: Enabling Channel 1 and Channel 40 1-40: Enabling Channel 1 to Channel 40 1-40, 60: Enabling Channel 1 to Channel 40 and Channel 60 All: Enabling all channels Null: Indicate that all channels are disabled
ADR Mode	Enable or disable network server to adjust Spreading Factor, Bandwidth an Tx Power to optimize data rates, airtime and energy consumption in the network.
Spreading Factor	If ADR mode is disabled, the device will send uplink data following this SF parameter. The higher the spreading factor, the longer the transmission distance, the slower the transmission speed and the more the consumption.
Tx Power	Tx power (transmit power) refers to the strength of the outgoing signal transmitted by the device. This is defined by LoRa alliance.
RX2 Data Rate	RX2 data rate to receive downlinks or send D2D commands.
RX2 Frequency	RX2 frequency to receive downlinks or send D2D commands. Unit: Hz

General Settings

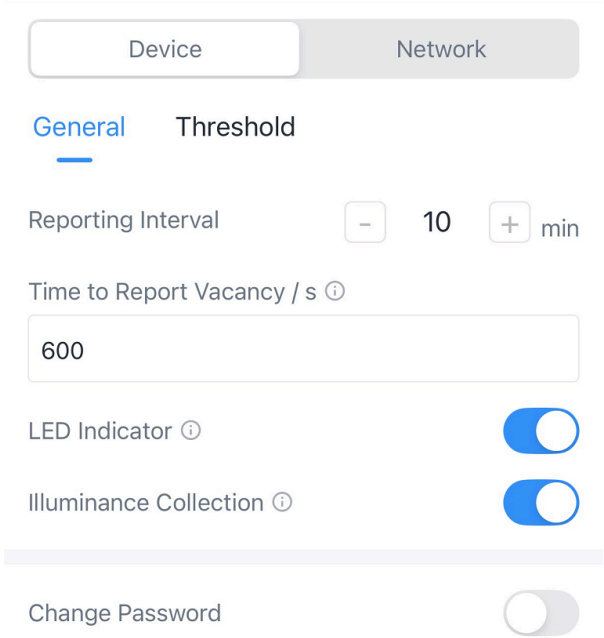

Parameters	Description
Reporting Interval	The time interval for reporting people counting data and battery level to the network server. Range: 1 - 1080min, Default: 30 minutes **Note:** The device will also report “Occupied” status immediately when it detects motions.
Time to Report Vacancy/s	When the PIR sensor does not detect motion for a period of Idle Time, device will report “Vacant” status. Default: 120 s
LED Indicator	Enable or disable the LED Indicator to indicate PIR status.
Change Password	Change the password for ToolBox App to write this device.

Time Synchronization

This section describes how to sync the time of the device.

Sync via ToolBox App

After reading the device via Milesight ToolBox App, sync the device time with time zone from the smart phone.

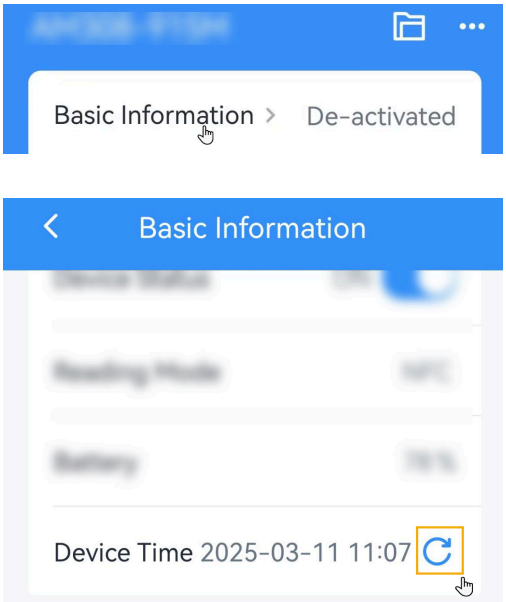

Sync via Network Server

This requires to ensure the LoRaWAN® network server supports device time synchronization feature. Example: Milesight gateway embedded NS.

1. Set the LoRaWAN® version of the device to V1.0.3.
2. Connect the device to the network server. After joining the network, the device will send a DeviceTimeReq MAC command to enquire the time from network server.

Note:

- This only supports to get the time but not time zone. The time zone can be configured by ToolBox App or downlink command.
- The device will send the DeviceTimeReq command every 5 days since the last sync.

Threshold Settings

When illuminance collection is enabled, users can define the Bright or Dark state via detection data of light sensor in threshold settings. Besides, when the PIR sensor is triggered and light status meets the threshold, WS202 will send alarms immediately. Otherwise, it will not send data right away.

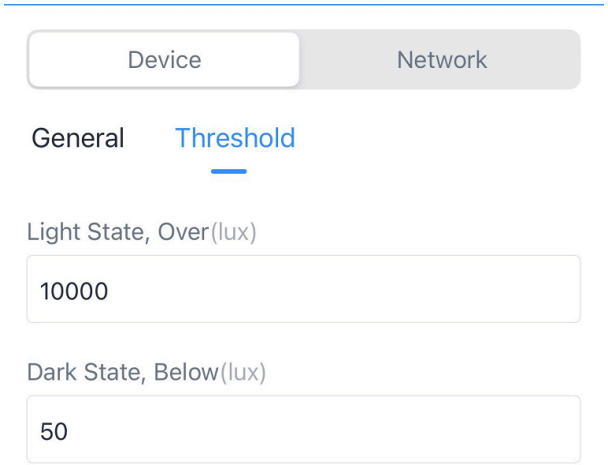

Milesight D2D Settings

Milesight D2D protocol is developed by Milesight and used for setting up transmission among Milesight devices without gateway. When the Milesight D2D settings is enabled, the device can work as a D2D controller to send control commands to trigger Milesight D2D agent devices.

1. Configure the RX2 datarate and RX2 frequency.

Note:
It is suggested to change the default values if there are many LoRaWAN® devices around.

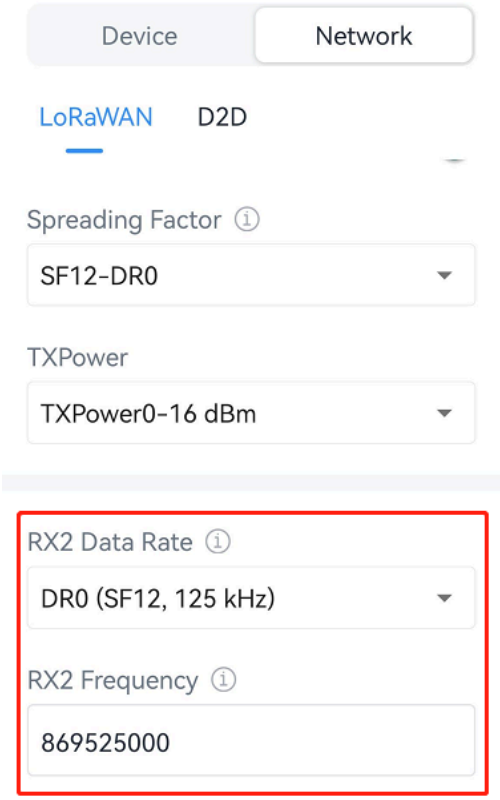

2. Enable Milesight D2D feature and define a unique D2D key that is the same as Milesight D2D agent devices. (Default D2D key: 5572404C696E6B4C6F52613230313823)

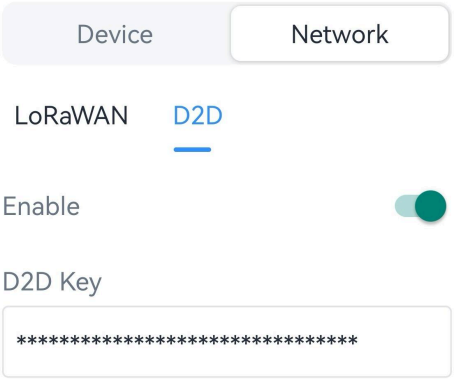

3. Enable one of statuses and configure 2-byte hexadecimal Milesight D2D command.

Note:
If you enable **LoRa Uplink**, a LoRaWAN® uplink packet that contains corresponding alarm status will be sent to gateway after the Milesight D2D command packet. Otherwise, the alarm packet will not send to LoRaWAN® gateway.

Example

When the device detects this status, it will send a D2D command 0002 to Milesight D2D agent devices.

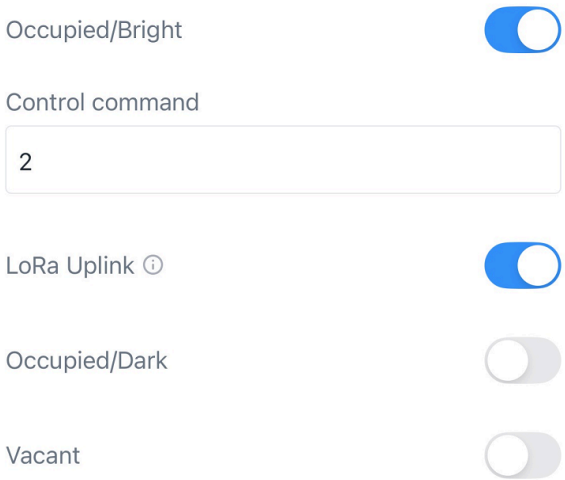

Maintenance

Upgrade

This chapter describes the steps to upgrade the device via ToolBox App.

1. Download firmware from Milesight official website to your smartphone.
2. Read the target device via ToolBox App, click **Upgrade** to upload the firmware file.
3. Click **Upgrade** to upgrade the device.

Note:
- Operation on ToolBox is not supported during an upgrade.
- Only Android version ToolBox supports the upgrade feature.

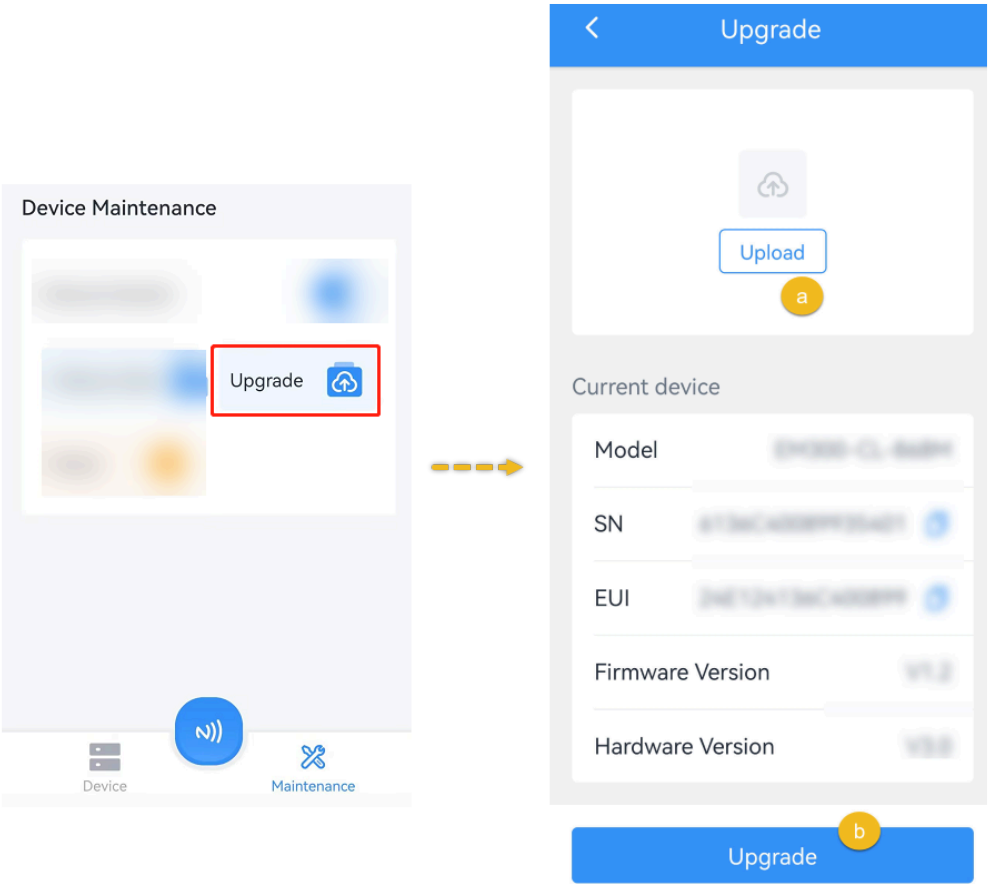

Backup and Restore

This device supports configuration backup for easy and quick device configuration in bulks. Backup and restore is allowed only for devices with the same model and frequency band.

Backup and Restore

1. Launch ToolBox App, attach the NFC area of smartphone to the device to read the configuration.

2. Edit the configuration as required, click **Set Template** to save current configuration as a template to the ToolBox App.

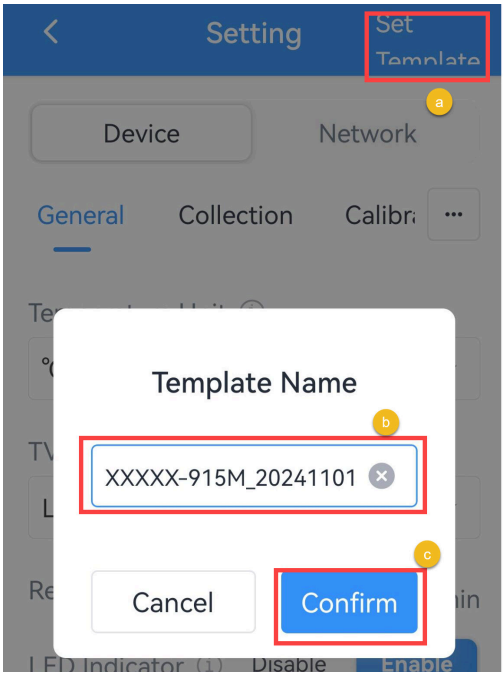

3. Go to **Device >Template** page.

4. Select and click the target template, click **Write** to import the configuration to target devices.

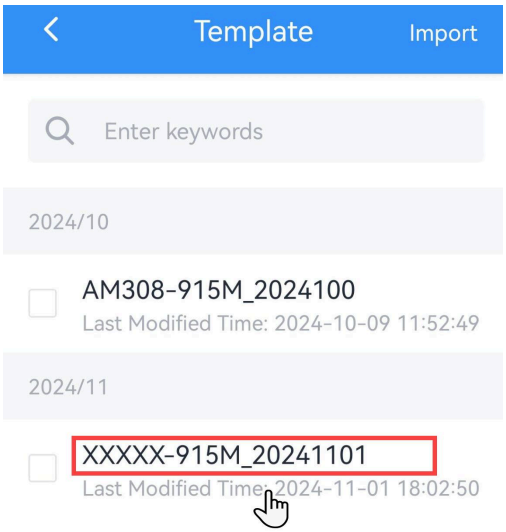

Export and Delete Template

1. Check the box of the target template.

2. Click **Export** to export this template as JSON format file and save it to the smartphone, click **Delete** to delete this template from your ToolBox App.

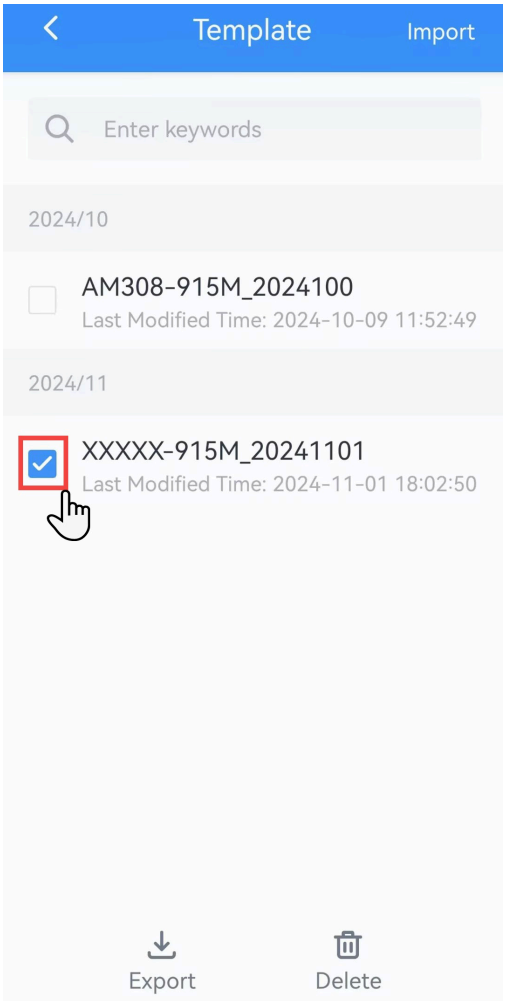

Reset to Factory Default

Via Hardware: Hold on the reset button for more than 10s until the LED indicator quickly blinks.

Via ToolBox App: Click **Reset** and attach the smartphone to device to reset the device.

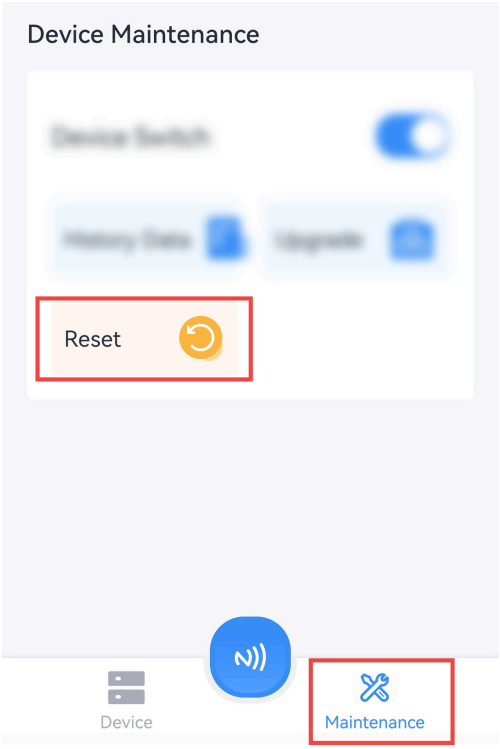
Device Maintenance
Reset
Device
Maintenance

Chapter 6. Installation

PIR Detection Area

Only when someone passes through different shadow areas, the device will detect the status as Occupied.

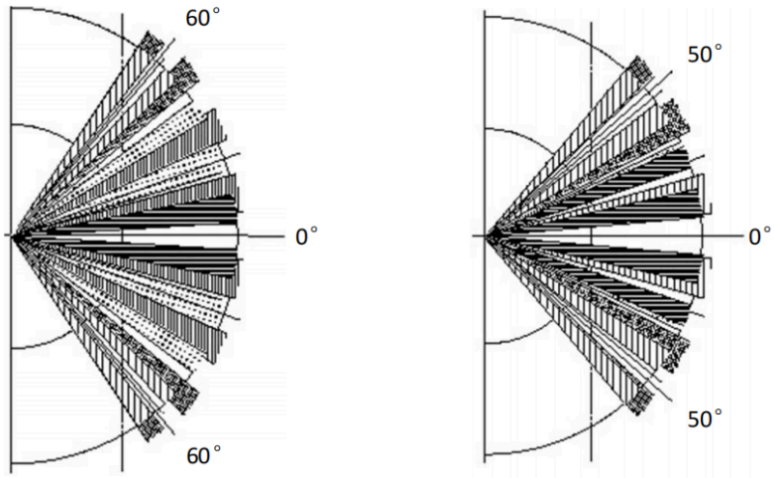

Installation Note

1. Adjust the installation direction according to detection area requirement.
2. The device can be mounted on a wall or ceiling. It's recommended to install at 1.5~2.5m from the floor.
3. Ensure the detection area does not have moving objects like waving trees and fans.
4. Ensure the detection area is not blocked by curtains or barriers.

Blocking Sticker Paste

For applications requiring detection angle control, such as work station, in order to prevent accidental detection of people around the station, please paste the blocking stickers on the sensor along the bottom of the PIR lens for range shielding. Each sticker can cover about a 180° range. After paste the stickers along the bottom of the lens and wrapping the sensor 360°, the detection area has changed to 70° Horizontal, 60° Vertical.

Note:
The detection area may be affected by manual pasting, potentially introducing errors.

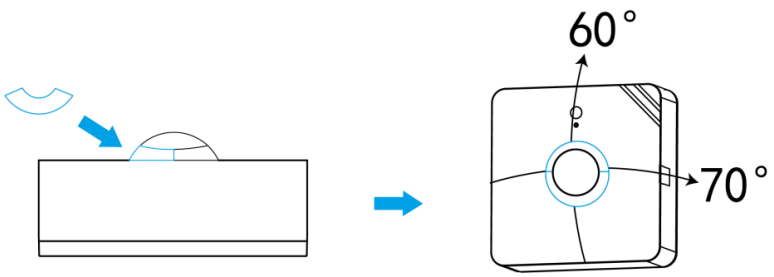

3M Tapes Fix

Note:

To ensure the devices are securely installed and prevent them from falling due to adhesive peeling, please strictly adhere to the following requirements:

1. Install the device on a dry, smooth, sturdy, grease-free wall.
2. Do not install the device on rough, damp, crumbling, greasy, or wallpapered walls.
3. Before installation, wipe the wall with a clean cloth to ensure it is free of dust and grease.
4. After adhering the device to the wall, press firmly to ensure it is fully adhered. Allow 24 hours for the best adhesion results.
5. If the wall conditions do not meet the above requirements, choose an alternative installation method, such as screw fixation.

Paste 3M tape to the back of the device, then tear the other side and place it on a flat surface.

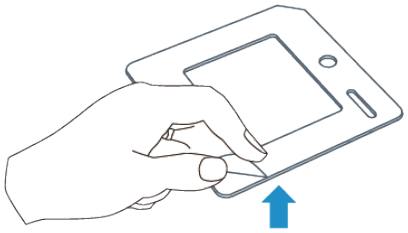

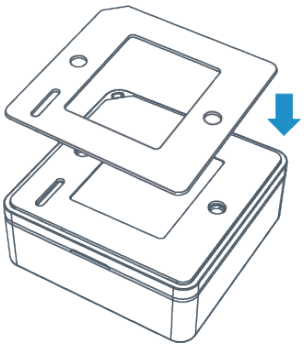

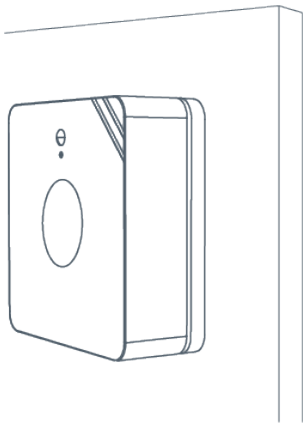

Screw Fix

Note:

1. Wall materials must have sufficient strength and stability to ensure that screws are securely fastened and the overall structure is sturdy.
2. Screws should be fastened in locations that avoid electrical wiring, water pipes, and other elements within the wall to prevent damage to the wall structure or safety hazards.

Remove the back cover of the device, screw the wall plugs into the wall and fix the cover with screws on it, then install back the device.

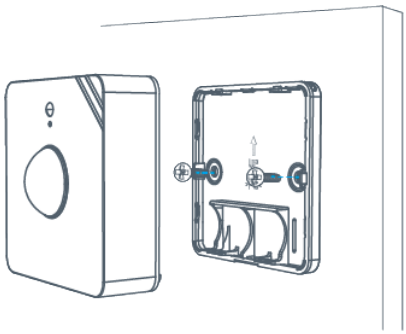

Chapter 7. Battery Replacement

Use a screwdriver to remove the back cover and insert the battery correctly. After inserting the battery, the indicator will light up in green for 3 seconds when the device turns on.

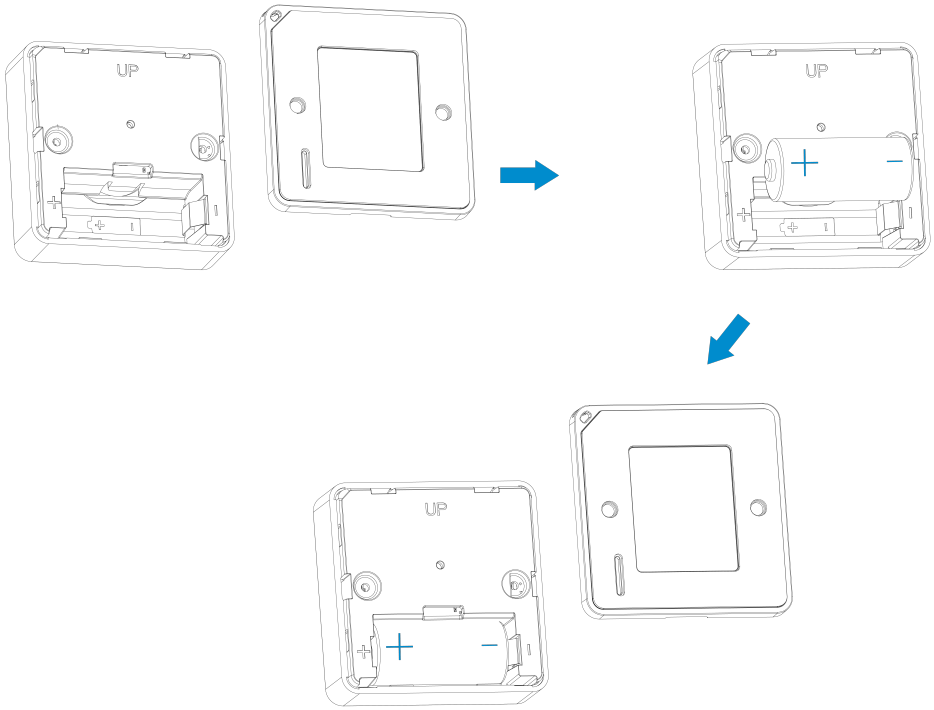

Note:

1. The device can only be powered by ER14335 Li-$SOCl_2$ battery not alkaline batteries.
2. Ensure the battery direction is not reversed.
3. Ensure all replacing batteries are newest; otherwise it may shorten battery life or cause inaccurate power calculation.
4. The battery should be removed from the device if it is not used for an expended period.

Chapter 8. Uplink Packets and Downlink Commands

Overview

All messages are based on following format (HEX), the Data field should follow little-endian:

Channel1	Type1	Data1	Channel2	Type2	Data2	Channel3	...
1 Byte	1 Byte	N Bytes	1 Byte	1 Byte	N Bytes	1 Byte	...

For decoder examples please find files on https://github.com/Milesight-IoT/SensorDecoders.

Uplink Packets

Basic Information

The device will report a basic information packet whenever joining the network.

Item	Channel	Type	Byte	Description
Power On	ff	0b	1	Device is on
Protocol Version	ff	01	1	Example: 01=V1
Serial Number	ff	08	6	12 digits
Hardware Version	ff	09	2	Example: 03 10 = V3.1
Software Version	ff	0a	2	01 14 => V1.14
Device Type	ff	0f	1	00: Class A, 01: Class B, 02: Class C, 03: Class C to B

Example:

ff0bff ff0101 ff086538b2232131 ff090100 ff0a0101 ff0f00		
Channel	**Type**	**Value**
ff	0b	Power On: ff
ff	01	Protocol Version: 01(V1)
ff	08	SN: 6538b2232131

ff0bff ff0101 ff086538b2232131 ff090100 ff0a0101 ff0f00		
Channel	**Type**	**Value**
ff	09	Hardware Version: 0100 (V1.0)
ff	0a	Software Version: 0101(V1.1)
ff	0f	Device Type: 00(Class A)

Periodic Report

The device supports the sensor data according to reporting interval.

Item	Channel	Type	Byte	Description
Battery Level	01	75	1	UINT8, Unit: %
PIR Status	03	00	1	01: Occupied, 00: Vacant
Light Status	04	00	1	01: Bright, 00: Dark

Example:

Report as reporting interval:

017562 030001 040001		
Channel	**Type**	**Value**
01	75	Battery Level: 62=>98%
03	00	PIR Status: 01=> Occupied
04	00	Light Status: 01=> Bright

Alarm Report

The device supports to report below types of alarm report packets.

Example:

1. Report when PIR status changes.

030001		
Channel	**Type**	**Value**
03	00	PIR Status: 01=> Occupied

2. Report when battery level drops to 1%.

017501		
Channel	**Type**	**Value**
01	75	Battery Level: 01=>1%

Downlink Commands

This device supports downlink commands for configuration and control. The downlink application port is 85 by default.

General Setting

Item	Channel	Type	Byte	Description
Reboot	ff	10	1	ff
Reporting Interval	ff	03	2	UNIT16, Unit: s
Threshold Setting	ff	06	9	Byte 1: 4c Byte 2-3: Min. Light value, Unit: lux Byte 4-5: Max. Light value, Unit: lux Byte 6-9: 00000000

Example:

1. Reboot the device.

ff10ff		
Channel	**Type**	**Value**
ff	10	ff

2. Set report interval as 20 minutes.

ff03b004		
Channel	**Type**	**Value**
ff	03	b004=>04b0=1200s=20 minutes

Chapter 9. Services

Milesight provides customers with timely and comprehensive technical support services. End-users can contact your local dealer to obtain technical support. Distributors and resellers can contact directly with Milesight for technical support.

Technical Support Mailbox: iot.support@milesight.com

Online Support Portal: https://support.milesight-iot.com

Resource Download Center: https://www.milesight.com/iot/resources/download-center/

MILESIGHT CHINA

TEL: +86-592-5085280

FAX: +86-592-5023065

Add: Building C09, Software Park Phase III, Xiamen 361024, Fujian, China