Milesight

WS203

Motion & TH Sensor

User Guide

14 rue Edouard Petit
42000 St-Etienne

Tel : +33 477 92 03 56
Email : contact@rg2i.com

www.rg2i.com

Contents

Chapter 1. Preface 4

Copyright Statement 4

Safety Instruction 4

Revision History 4

Chapter 2. Product Introduction 5

Overview 5

Features 5

Chapter 3. Hardware Introduction 6

Packing List 6

Hardware Overview 6

Power Button and LED Indicator 7

Dimensions (mm) 7

Chapter 4. Quick Start 8

Access the Sensor via NFC 8

Configure the Network Setting 8

Chapter 5. Operation Guide 10

LoRaWAN® Settings 10

General Settings 13

Calibration Settings 15

Threshold Settings 16

Time Synchronization 17

Milesight D2D Settings 18

Maintenance 20

Upgrade 20

Backup and Restore 21

Reset to Factory Default 23

Chapter 6. Installation 25

Installation Preparations.....25
PIR Cover Installation.....25
Device Installation.....26
Chapter 7. Battery Replacement.....29
Chapter 8. Uplink Packets and Downlink Commands.....30
Overview.....30
Uplink Packets.....30
Basic Information.....30
Periodic Report.....31
Alarm Report.....31
Historical Data.....32
Downlink Commands.....33
General Setting.....34
Milesight D2D Setting.....34
Alarm Setting.....36
Historical Data Enquiry.....37
Chapter 9. Services.....39

Chapter 1. Preface

Copyright Statement

This guide may not be reproduced in any form or by any means to create any derivative such as translation, transformation, or adaptation without the prior written permission of Xiamen Milesight IoT Co., Ltd (Hereinafter referred to as Milesight).

Milesight reserves the right to change this guide and the specifications without prior notice. The latest specifications and user documentation for all Milesight products are available on our official website http://www.milesight.com

Safety Instruction

These instructions are intended to ensure that user can use the product correctly to avoid danger or property loss. Milesight will not shoulder responsibility for any loss or damage resulting from not following the instructions of this operating guide.

CAUTION:
Injury or equipment damage may be caused if any of these cautions are neglected.

- The device is not intended to be used as a reference sensor, and Milesight will not should responsibility for any damage which may result from inaccurate readings.
- The device must not be disassembled or remodeled in any way.
- Do not place the device close to objects with naked flames.
- Do not place the device where the temperature is below/above the operating range.
- Make sure electronic components do not drop out of the enclosure while opening.
- When installing the battery, please install it accurately, and do not install the reverse or wrong model.
- The device must never be subjected to shocks or impacts.
- In order to protect the security of the device, please change device password when first configuration. The default password is 123456.

Revision History

Release Date	Version	Revision Content
Aug. 3, 2023	V 1.0	Initial version

Chapter 2. Product Introduction

Overview

The Milesight WS203 is an environmental monitoring device that combines motion and temperature/humidity (TH) sensors. By detecting motion within an 8-meter range based on passive infrared(PIR) technology, the WS203 can trigger TH detection and periodically report environmental status over LoRaWAN® network.

With easy configuration and wireless detection, the WS203 offers a reliable and convenient solution for space and TH optimization. Compatible with Milesight LoRaWAN® gateway, IoT Cloud platform and Milesight Development Platform, it enables real-time monitoring of occupant status for effective remote management.

The WS203 can find applications in various settings including smart offices, buildings, hospitals, and more.

Features

- Equipped with passive infrared and Fresnel Lens for motion or occupancy detection
- Built-in high-accurate TH sensor along with PIR sensor enabling communicative triggers
- Provide different types of PIR covers for adjustable and flexible field angles and different detecting ranges
- V0 grade flame retardant material makes it adaptable to various scenarios, enhancing safety and reliability
- Store locally 1000 historical records and support retransmission to prevent data loss
- Equipped with NFC for one touch configuration and support card emulation mode
- Function well with standard LoRaWAN® gateways and network servers
- Compatible with Milesight IoT Cloud and Milesight Development Platform
- Support Milesight D2D protocol to enable ultra-low latency and direct control without a gateway

Chapter 3. Hardware Introduction

Packing List

1 × WS203 Sensor

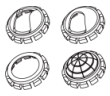

4 × PIR Covers

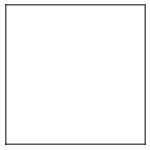

1 × 3M Tape

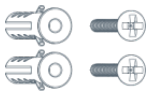

2 × Wall Mounting Kits

1 × Quick Guide

1 × Warranty Card

Note:

If any of the above items is missing or damaged, please contact your sales representative.

Hardware Overview

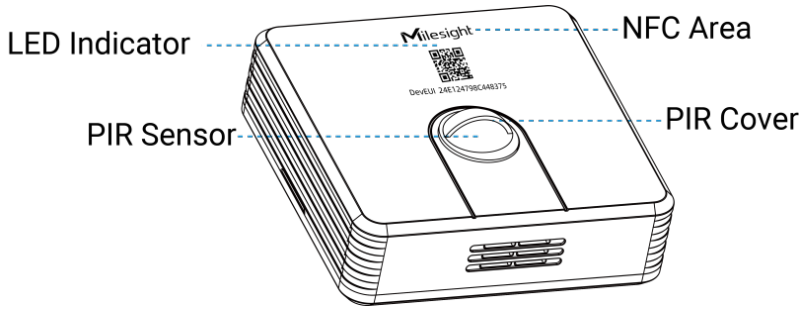

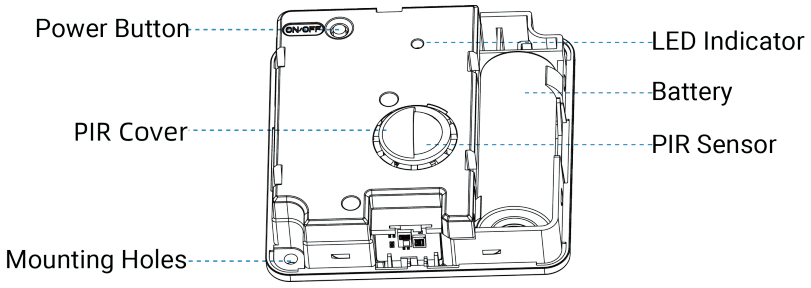

Power Button and LED Indicator

Function	Action	LED Indicator
Power On/Off	Press and hold the power button for more than 3 seconds	Power On: Off → Green Light On
		Power Off: On → Off
Check On/Off Status	Quickly press the power button once.	Green Light On: Device is on
		Light Off: Device is off
Reset to Factory Default	Press and hold the power button for more than 10 seconds	Green Light Blinks Quickly
PIR Status	Vacant → Occupied	Red Light Blinks Twice
	Occupied → Vacant	Green Light Blinks Twice

Dimensions (mm)

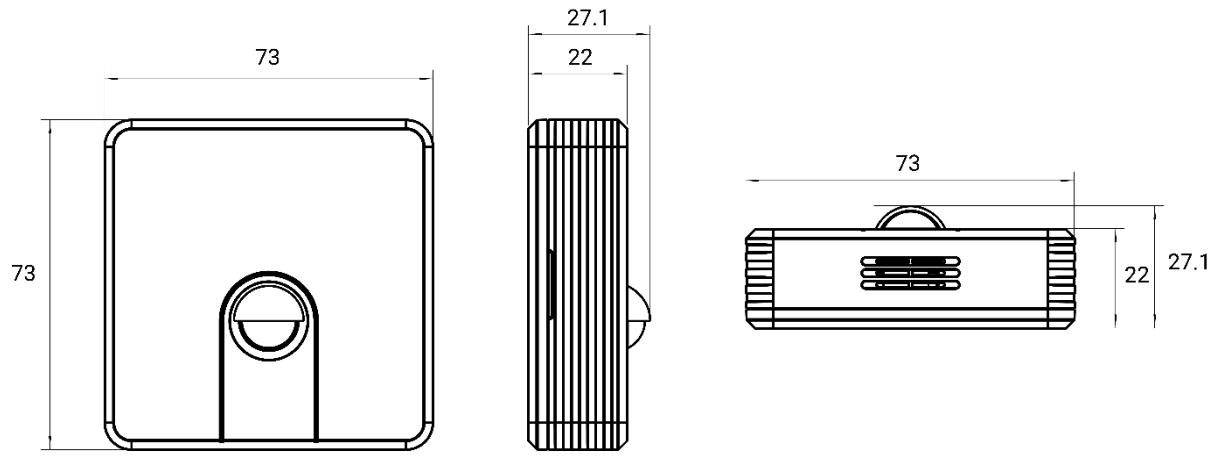

Chapter 4. Quick Start

Access the Sensor via NFC

1. Download and install “Milesight ToolBox” App from Google Play or Apple Store on an NFC-supported smartphone.
2. Enable NFC function on the smartphone.
3. Launch Milesight ToolBox, and select the default mode as NFC.
4. Attach the smart phone with NFC area to the device and click to read device information. Basic information, data, and settings of the device will be shown on the Milesight ToolBox App if it’s recognized successfully.
5. Adjust the settings on the App, then attach the smartphone with NFC area to the device and click **Write** to write the settings. After writing, reread the device to check if the configuration is written well.

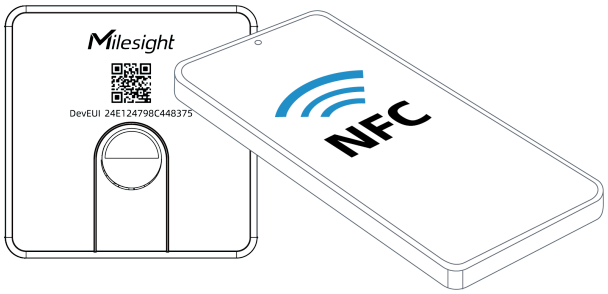

Note:

- Ensure the location of smartphone NFC area and it’s recommended to take off phone case.
- If the smart phone fails to read/write configurations via NFC, keep the phone away and back to try again.
- The default device password is 123456. Please change a new password for security.

Configure the Network Setting

1. Go to **Network** settings page, select the join type as OTAA or ABP as required.

Note:
OTAA mode is required if you connect device to Milesight IoT Cloud.

2. Select supported frequency the same as LoRaWAN® gateway.

Note:
Set the channel index as 8-15 for US915 or AU915 if using default settings of Milesight gateways.

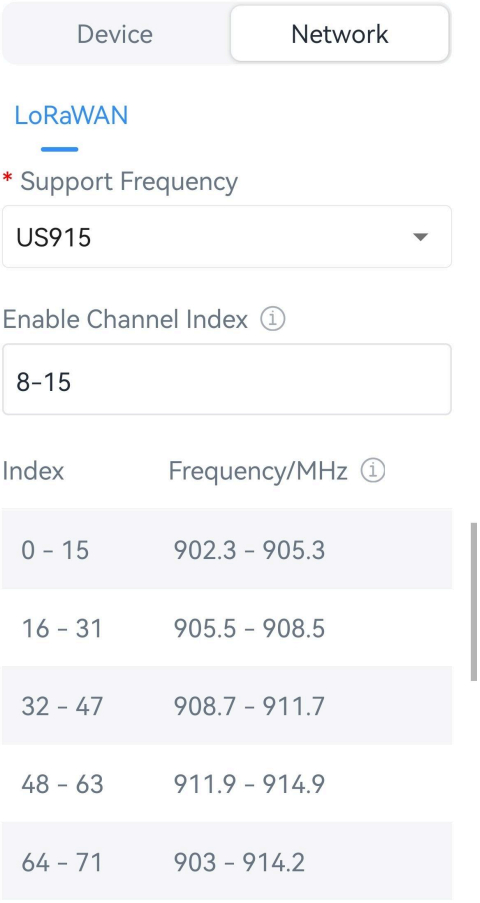

3. Keep other settings by default and click **Write** to save the settings.

Chapter 5. Operation Guide

LoRaWAN® Settings

Configure AppEUI, Join Type, Application Key, and other information. You can also keep all the default settings.

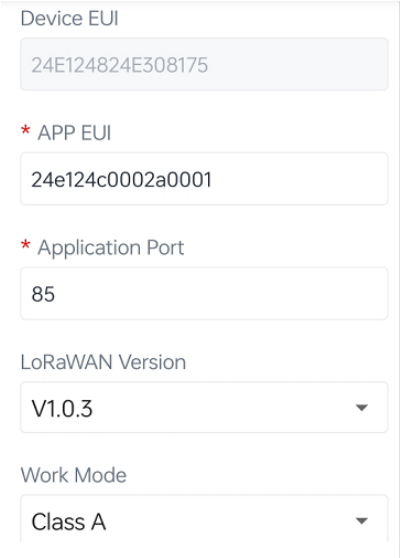

Parameters	Description
Device EUI	Unique ID of the device which can be found on the device. **Note:** please contact sales for device EUI list if you have many units.
App EUI	The default App EUI (join EUI) is 24E124C0002A0001.
Application Port	The port used for sending and receiving data, the default port is 85.
LoRaWAN® Version	V1.0.2 and V1.0.3 are available.
Work Mode	It's fixed as Class A.
Confirmed Mode	If the device does not receive ACK packet from network server, it will resend data once.
Join Type	OTAA and ABP mode are available.

Parameters	Description
	Note: it's necessary to select OTAA mode if connecting device to Milesight IoT Cloud or Milesight Development Platform.
Application Key	Appkey for OTAA mode, default value: "Device EUI" + "Device EUI" (since Q4 of 2025). Example: 24e124123456789024e1241234567890 **Note:** • The default value of earlier devices is 5572404C696E6B4C6F52613230313823. • Please contact sales before purchase if you require random App Keys.
Network Session Key	Nwkskey for ABP mode, the default is 5572404C696E6B4C6F52613230313823.
Application Session Key	Appskey for ABP mode, the default is 5572404C696E6B4C6F52613230313823.
Device Address	DevAddr for ABP mode, default is the 5th to 12th digits of SN.
Rejoin Mode	Reporting interval≤35 mins: the device will send a specific number of LinkCheckReq MAC packets to the network server every reporting interval or every double reporting interval to validate connectivity; If there is no response, the device will rejoin the network. Reporting interval > 35 mins: the device will send a specific number of LinkCheckReq MAC packets to the network server every reporting interval to validate connectivity; If there is no response, the device will re-join the network.

Parameters	Description
	Note: 1. Only OTAA mode supports rejoin mode. 2. The actual sending number is **Set the number of packets sent** +1.
Channel Mode	Select **Standard-Channel** mode or **Single-Channel** mode. When **Single-Channel** mode is enabled, only one channel can be selected to send uplinks.
Supported Frequency	Enable or disable the frequency to send uplinks. If frequency is one of CN470/AU915/US915, enter the index of the channel to enable in the input box, making them separated by commas. **Examples:** 1, 40: Enabling Channel 1 and Channel 40 1-40: Enabling Channel 1 to Channel 40 1-40, 60: Enabling Channel 1 to Channel 40 and Channel 60 All: Enabling all channels Null: Indicate that all channels are disabled
ADR Mode	Enable or disable network server to adjust Spreading Factor, Bandwidth an Tx Power to optimize data rates, airtime and energy consumption in the network.
Spreading Factor	If ADR mode is disabled, the device will send uplink data following this SF parameter. The higher the spreading factor, the longer the transmission distance, the slower the transmission speed and the more the consumption.
Tx Power	Tx power (transmit power) refers to the strength of the outgoing signal transmitted by the device. This is defined by LoRa alliance.
RX2 Data Rate	RX2 data rate to receive downlinks or send D2D commands.
RX2 Frequency	RX2 frequency to receive downlinks or send D2D commands. Unit: Hz

General Settings

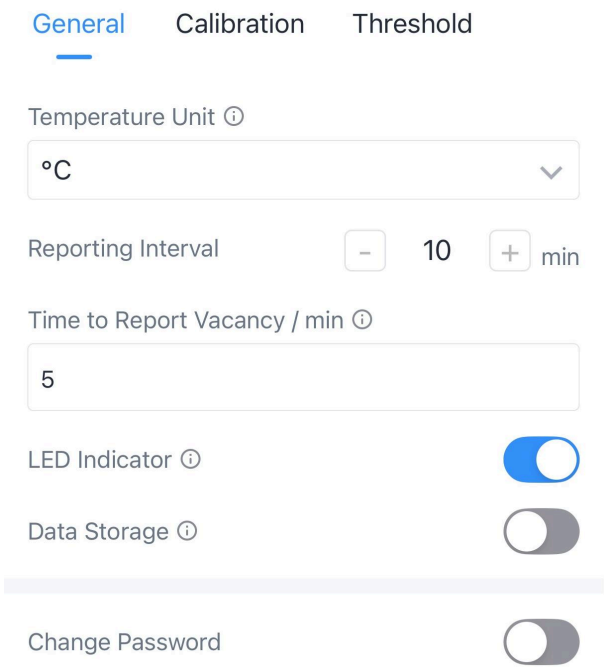

Parameters	Description
Temperature Unit	Set the unit of temperature displayed on the status page.
Reporting Interval	The time interval for reporting PIR status, temperature, humidity, and battery level to the network server. Range: 1 - 1440min, Default: 30 minutes **Note:** The device will report PIR "Occupied" status trigger packet immediately when it detects motions and the reporting interval will be re-calculated.
Time to Report Vacancy/min	A "Vacant" status trigger packet will be reported if the device does not detect motion within a certain period of time and the reporting interval will be re-calculated. Default: 5 min, Range: 1~60 min
LED Indicator	Enable or disable the LED Indicator to indicate PIR status.

Parameters	Description
Data Storage	Disable or enable to store **periodic report** data locally. The stored data can be exported as CSV format file and saved to smartphone via ToolBox. 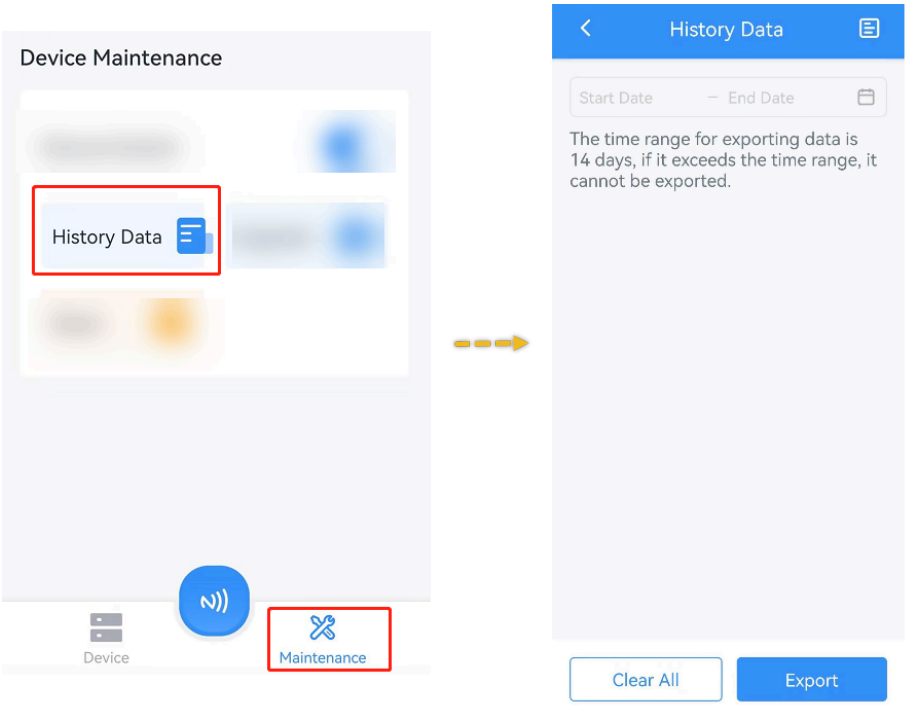 **Note:** 1. It is necessary to sync the time to ensure the data is stored in correct time. 2. The device will still store the data even the network status is de-activated. 3. ToolBox App can only export the last 14 days' data at most.
Data Retransmission	Disable or enable data retransmssion. When the device detects the network status is de-activated via Rejoin Mode, the device will record a data lost time point and re-transmit the lost data after device re-connects to the network.

Parameters	Description
	Note: 1. This setting only takes effect when Data Storage is enabled. 2. If the device is rebooted or re-power when data retransmission is not completed, the device will re-send all retransmission data again after device is reconnected to the network. 3. If the network is disconnected again during data retransmission, it will only send the latest disconnected data. 4. The default report data retransmission interval is 600s, this can be changed via downlink command. 5. The reported format of retransmission data will include timestamps and is different from periodic report data. 6. This setting will increase the uplink frequencies and shorten the battery life.
Change Password	Change the password for ToolBox App to write this device.

Calibration Settings

WS203 supports numerical calibration of the temperature and humidity value. Set the calibration value, the device will add calibration value to the current value and upload the final value.

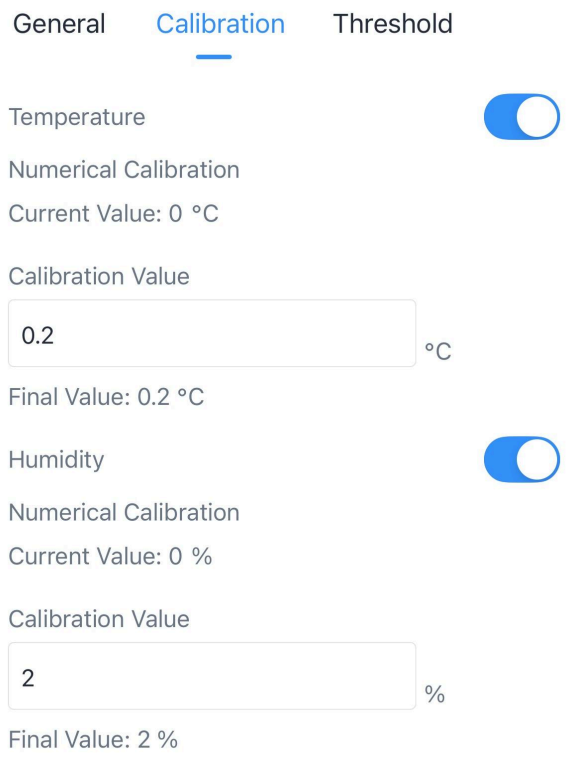

Threshold Settings

Enable the threshold settings and input the temperature/humidity threshold. If the threshold is triggered, the device will upload the alarm packet once instantly. Only when the threshold alarm is dismissed and re-triggered, the device will send the threshold alarm again.

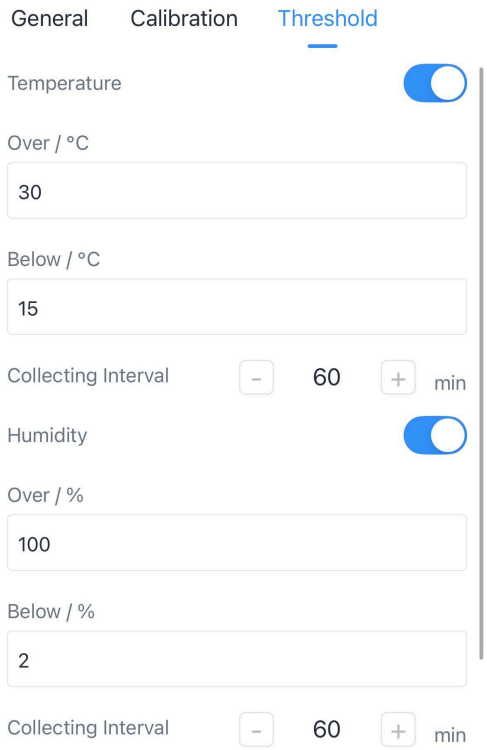

Time Synchronization

This section describes how to sync the time of the device.

Sync via ToolBox App

After reading the device via Milesight ToolBox App, sync the device time with time zone from the smart phone.

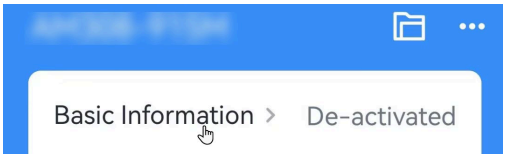

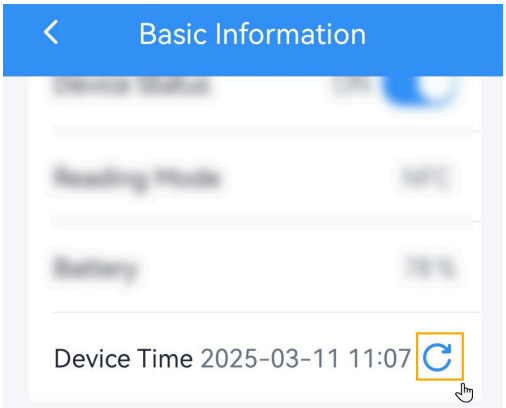

Sync via Network Server

This requires to ensure the LoRaWAN® network server supports device time synchronization feature. Example: Milesight gateway embedded NS.

1. Set the LoRaWAN® version of the device to V1.0.3.
2. Connect the device to the network server. After joining the network, the device will send a DeviceTimeReq MAC command to enquire the time from network server.

Note:

- This only supports to get the time but not time zone. The time zone can be configured by ToolBox App or downlink command.
- The device will send the DeviceTimeReq command every 5 days since the last sync.

Milesight D2D Settings

Milesight D2D protocol is developed by Milesight and used for setting up transmission among Milesight devices without gateway. When the Milesight D2D settings is enabled, the device can work as a D2D controller to send control commands to trigger Milesight D2D agent devices.

1. Configure the RX2 datarate and RX2 frequency.

Note:
It is suggested to change the default values if there are many LoRaWAN® devices around.

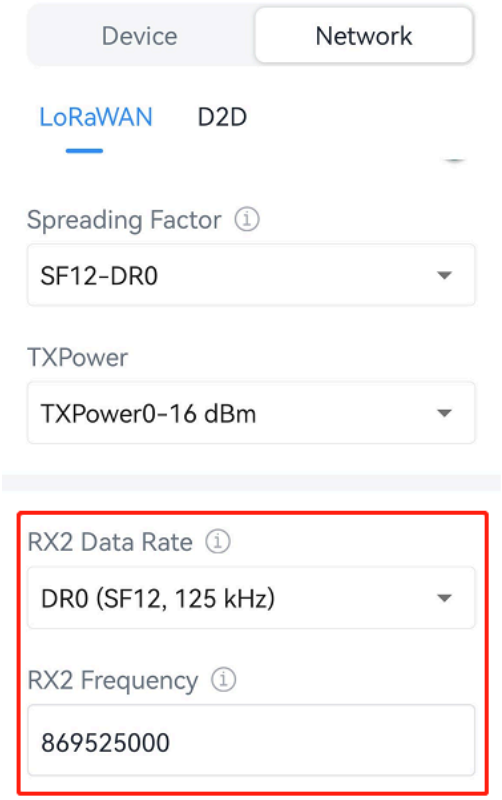

2. Enable Milesight D2D feature and define a unique D2D key that is the same as Milesight D2D agent devices. (Default D2D key: 5572404C696E6B4C6F52613230313823)

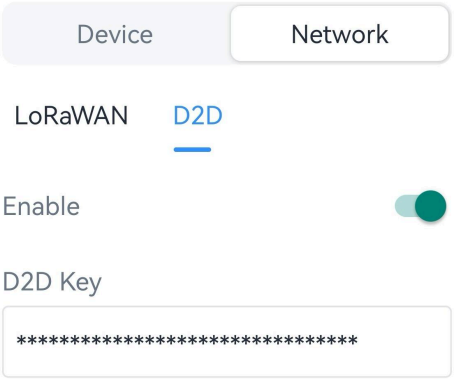

3. Enable one of statuses and configure 2-byte hexadecimal Milesight D2D command.

Note:

- It is necessary to enable the threshold alarm settings in advanced.
- If you enable **LoRa Uplink**, a LoRaWAN® uplink packet that contains corresponding alarm status will be sent to gateway after the Milesight D2D command packet. Otherwise, the alarm packet will not send to LoRaWAN® gateway.
- If you enable the control time setting, Milesight D2D agent devices will take corresponding actions within this duration after receiving commands from Milesight D2D controller. This feature is currently under development for Milesight D2D agent devices.

Example

When the device detects this status, it sends D2D command 0000 to Milesight D2D agent devices, which perform the corresponding action for 5 minutes.

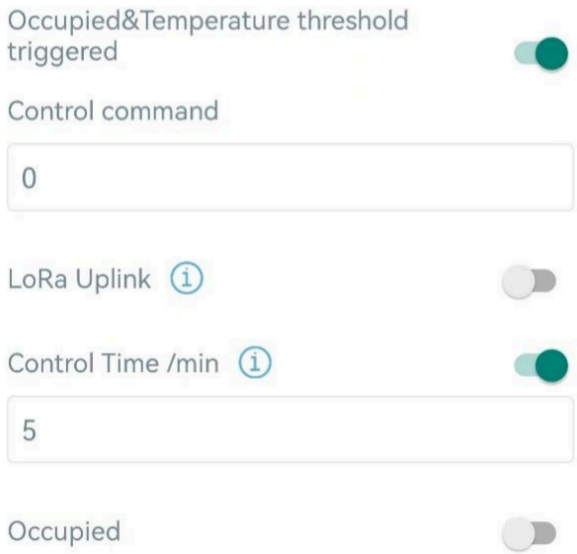

Maintenance

Upgrade

This chapter describes the steps to upgrade the device via ToolBox App.

1. Download firmware from Milesight official website to your smartphone.
2. Read the target device via ToolBox App, click **Upgrade** to upload the firmware file.

3. Click **Upgrade** to upgrade the device.

> **Note:**
> Operation on ToolBox is not supported during an upgrade.

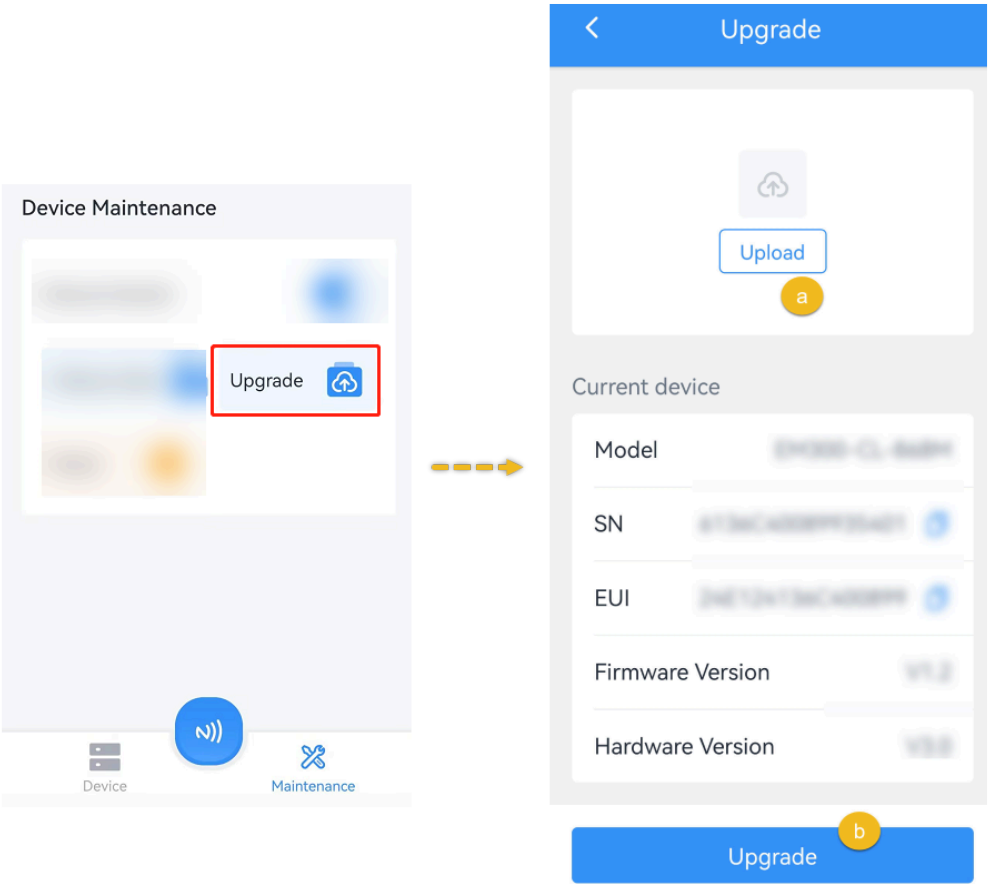

Backup and Restore

This device supports configuration backup for easy and quick device configuration in bulks. Backup and restore is allowed only for devices with the same model and frequency band.

Backup and Restore

1. Launch ToolBox App, attach the NFC area of smartphone to the device to read the configuration.

2. Edit the configuration as required, click **Set Template** to save current configuration as a template to the ToolBox App.

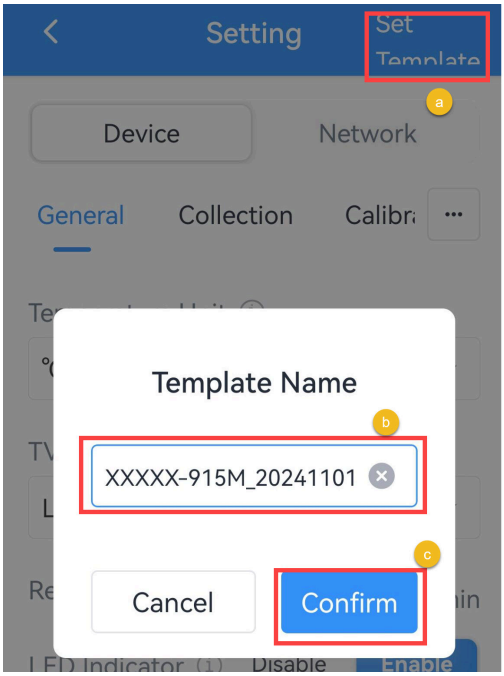

3. Go to **Device >Template** page.

4. Select and click the target template, click **Write** to import the configuration to target devices.

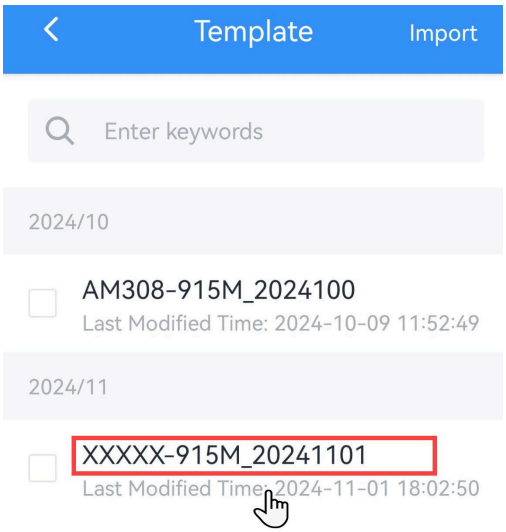

Export and Delete Template

1. Check the box of the target template.

2. Click **Export** to export this template as JSON format file and save it to the smartphone, click **Delete** to delete this template from your ToolBox App.

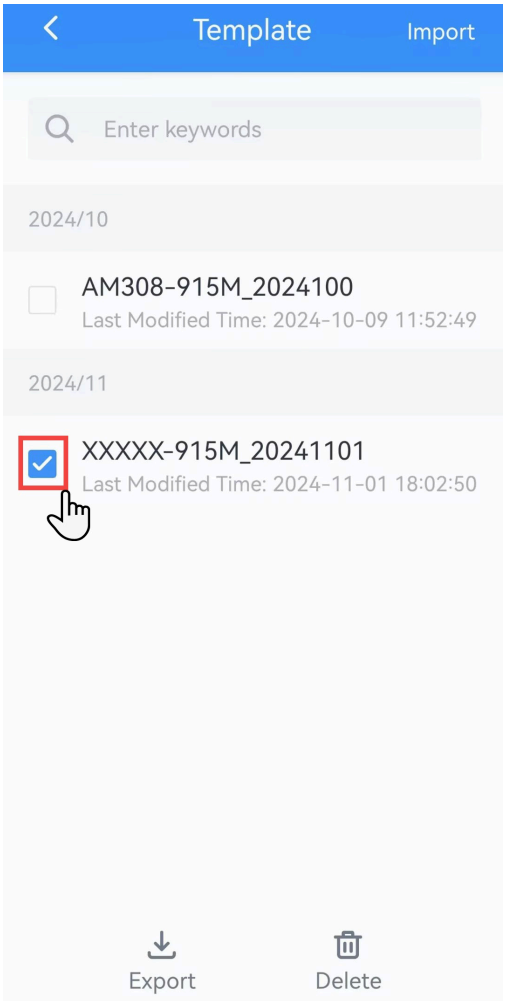

Reset to Factory Default

Via Hardware: Hold on the reset button for more than 10s until the LED indicator quickly blinks.

Via ToolBox App: Click **Reset** and attach the smartphone to device to reset the device.

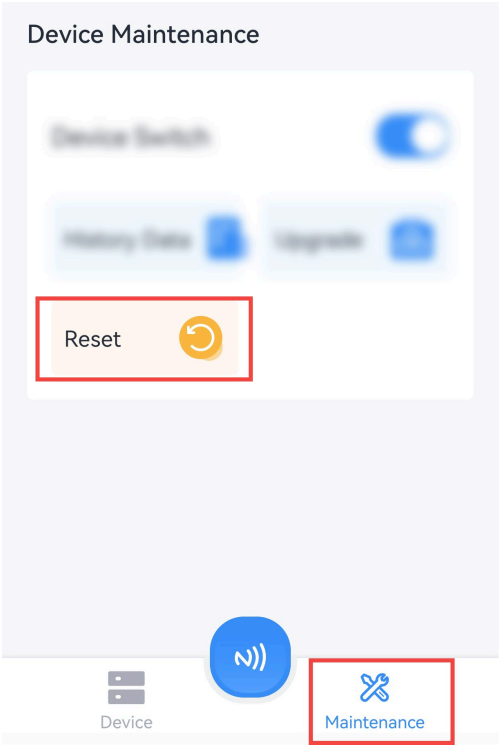
Device Maintenance
Reset
Device
Maintenance

Chapter 6. Installation

Installation Preparations

1. Adjust the installation direction according to the detection area requirement.
2. Ensure the detection area does not have moving objects like waving trees and fans.
3. Ensure the detection area is not blocked by curtains or barriers.
4. Do not expose the device to direct infrared (including sunlight, light, etc.), or the PIR detection will be affected.
5. The recommended installation location is 2 m in height on the wall with the half PIR cover to avoid room light inference.
6. Avoid the device to face a transparent plate (like glass) within 5m since the PIR will detect through it.

PIR Cover Installation

Take off the front cover of the device, then select the PIR cover as required and put it on the PIR sensor with groove alignment. The adjustable angle of every groove is 30°.

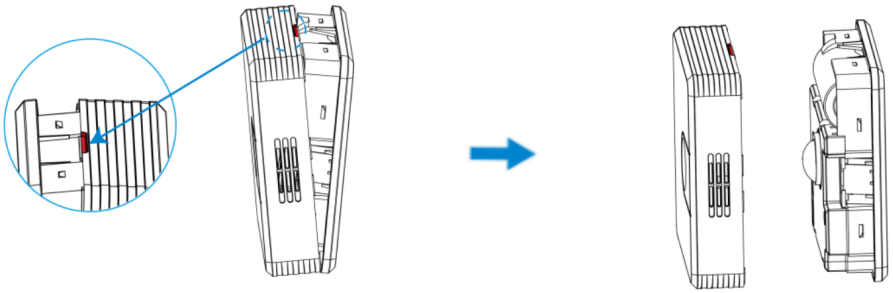

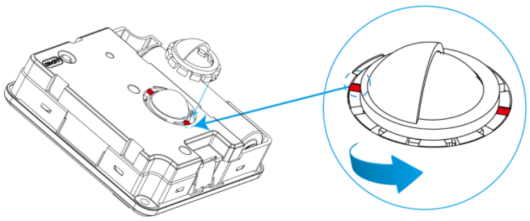

PIR cover reference guidance(wall mount and installation height=2m):

PIR Cover	Detection Area
	Maximum: 120 ° Horizontal, 50 ° Vertical, 6 m Recommend: 98 ° Horizontal, 44.4° Vertical, 5 m
	Maximum: 38 ° Horizontal, 50 ° Vertical, 6 m Recommend: 38 ° Horizontal, 44.4° Vertical, 5 m
	Maximum: 38 ° Horizontal, 100 ° Vertical, 6 m Recommend: 38 ° Horizontal, 88.8° Vertical, 5 m
	Maximum: 120 ° Horizontal, 100 ° Vertical, 6 m Recommend: 98 ° Horizontal, 88.8° Vertical, 5 m
	Support to be tailored as required

Device Installation

Fixed by 3M Tape

Note:
To ensure the devices are securely installed and prevent them from falling due to adhesive peeling, please strictly adhere to the following requirements:

1. Install the device on a dry, smooth, sturdy, grease-free wall.
2. Do not install the device on rough, damp, crumbling, greasy, or wallpapered walls.
3. Before installation, wipe the wall with a clean cloth to ensure it is free of dust and grease.
4. After adhering the device to the wall, press firmly to ensure it is fully adhered. Allow 24 hours for the best adhesion results.
5. If the wall conditions do not meet the above requirements, choose an alternative installation method, such as screw fixation.

Attach 3M tape to the back of the sensor, then tear the other side and place it on a flat surface. Please adjust the installation direction according to the detection area.

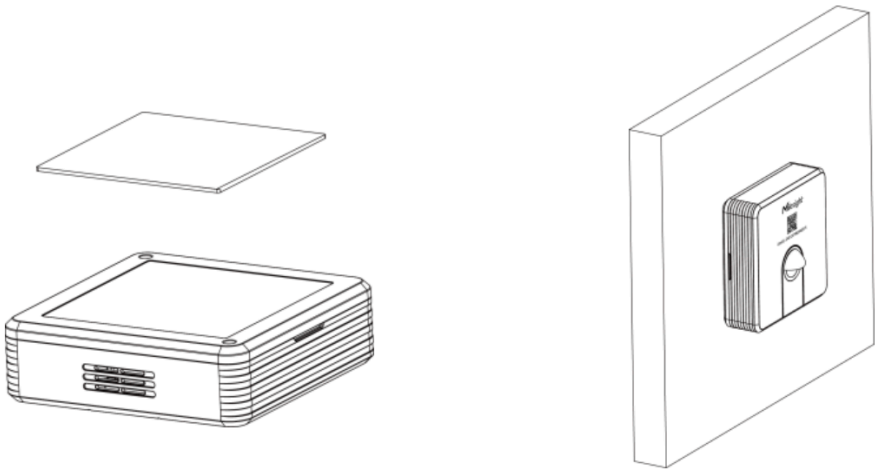

Note:

1. Since the default 3M tape has a high viscosity, please tear the device down via a screwdriver.
2. If it is necessary to tear the device down easily, please divide the 3M tape into several parts and only tear one part to the device.

Fixed by Mounting Kits

Note:

1. Wall materials must have sufficient strength and stability to ensure that screws are securely fastened and the overall structure is sturdy.
2. Screws should be fastened in locations that avoid electrical wiring, water pipes, and other elements within the wall to prevent damage to the wall structure or safety hazards.

1. Take off the front cover of the device, then fix the wall plugs to a flat surface according to the device mounting holes. Finally, secure the device to the wall plugs using screws. Please adjust the installation direction according to the detection area.

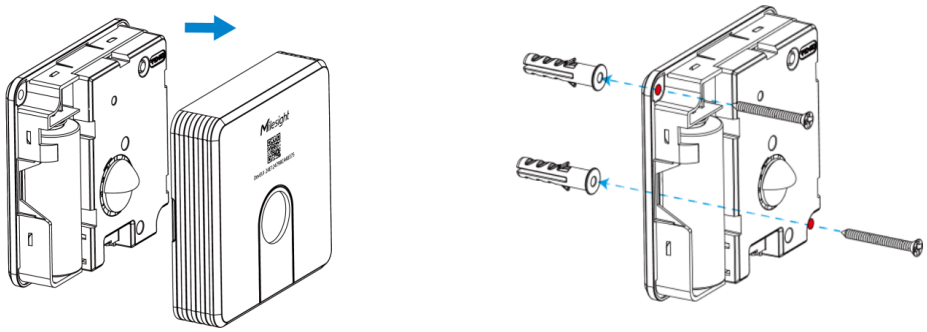

2. Restore the front cover back to the device.

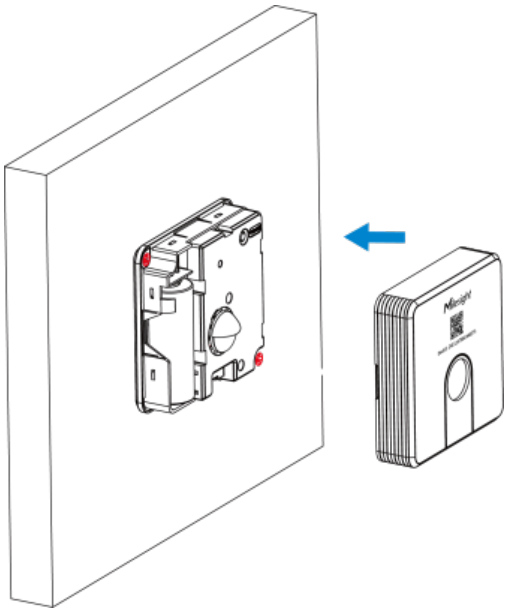

Chapter 7. Battery Replacement

Remove the battery cover on the back of the device and insert the battery in the correct direction. After inserting the battery, press and hold the power button for 3 seconds to turn on the device.

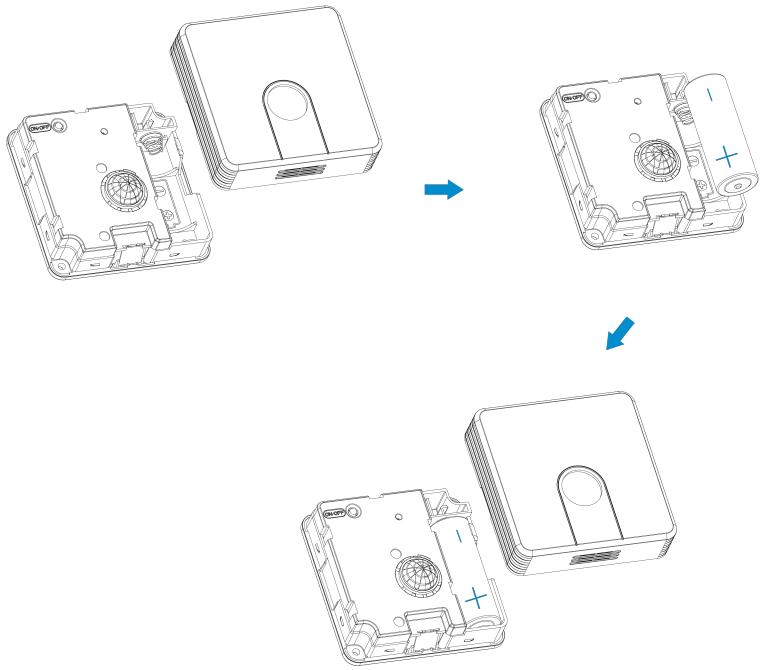

Note:

1. The device can only be powered by ER18505 Li-$SOCl_2$ battery not alkaline batteries.
2. Ensure the battery direction is not reversed.
3. Ensure all replacing batteries are newest; otherwise it may shorten battery life or cause inaccurate power calculation.
4. The battery should be removed from the device if it is not used for an expended period.

Chapter 8. Uplink Packets and Downlink Commands

Overview

All messages are based on following format (HEX), the Data field should follow little-endian:

Channel1	Type1	Data1	Channel2	Type2	Data2	Channel3	...
1 Byte	1 Byte	N Bytes	1 Byte	1 Byte	N Bytes	1 Byte	...

For decoder examples please find files on https://github.com/Milesight-IoT/SensorDecoders.

Uplink Packets

Basic Information

The device will report a basic information packet whenever joining the network.

Item	Channel	Type	Byte	Description
Power On	ff	0b	1	Device is on
Protocol Version	ff	01	1	Example: 01=V1
Serial Number	ff	08	6	12 digits
Hardware Version	ff	09	2	Example: 03 10 = V3.1
Software Version	ff	0a	2	01 14 => V1.14
Device Type	ff	0f	1	00: Class A, 01: Class B, 02: Class C, 03: Class C to B

Example:

ff0bff ff0101 ff086538b2232131 ff090100 ff0a0101 ff0f00		
Channel	**Type**	**Value**
ff	0b	Power On: ff
ff	01	Protocol Version: 01(V1)
ff	08	SN: 6538b2232131

ff0bff ff0101 ff086538b2232131 ff090100 ff0a0101 ff0f00		
Channel	**Type**	**Value**
ff	09	Hardware Version: 0100 (V1.0)
ff	0a	Software Version: 0101(V1.1)
ff	0f	Device Type: 00(Class A)

Periodic Report

The device supports the sensor data according to reporting interval.

Item	Channel	Type	Byte	Description
Battery Level	01	75	1	UINT8, Unit: %
Temperature	03	67	2	INT16*0.1, Unit: °C
Humidity	04	68	1	UINT8*0.5, Unit: %RH
PIR Status	05	00	1	01: Occupied, 00: Vacant

Examples:

1. Report as reporting interval (30 minutes by default).

017562 0367d500 04687f 050001		
Channel	**Type**	**Value**
01	75	Battery Level: 62=>98%
03	67	Temperature: d5 00=>00 d5=213*0.1=21.3°C
04	68	Humidity: 7f=>127*0.5=63.5%RH
05	00	PIR Status: 01=> Occupied

Alarm Report

The device supports to report below types of alarm report packets.

Item	Channel	Type	Byte	Description
Temperature Alarm	83	67	3	Byte 1-2: INT16*0.1, Unit: °C

Item	Channel	Type	Byte	Description
				Byte 3: 00-Alarm release, 01-Alarm

Example:

1. Temperature alarm packet: report when the temperature reaches the threshold or returns back to normal value.

83670e0101 04687a		
Channel	**Type**	**Value**
83	67	Temperature: 0e 01 =>01 0e = 270 * 0.1 = 27 °C 01= Alarm
04	68	Humidity: 7a=>122*0.5=61%RH

2. PIR trigger packet: report when PIR status changes.

0367d500 04687f 050001		
Channel	**Type**	**Value**
03	67	Temperature: d5 00=>00 d5=213*0.1=21.3°C
04	68	Humidity: 7f=>127*0.5=63.5%RH
05	00	PIR Status: 01=> Occupied

3. Report when battery level drops to 1%.

017501		
Channel	**Type**	**Value**
01	75	Battery Level: 01=>1%

Historical Data

The device will report retransmission data or stored data as below example.

Channel	Type	Byte	Description
20	ce	9	Byte 1-4: Unix Timestamp, Unit: s Byte 5: 00 - temperature threshold alarm is released 01 - temperature threshold alarm triggered 02 - PIR vacant trigger 03 - PIR occupied trigger 04 - periodic report Byte 6: PIR Status, 01-Occupied, 00-Vacant Byte 7-8: Temperature Byte 9: Humidity

Example:

20ce 4a7c5b63 0401 0e01 7b			
Channel	**Type**	**Time Stamp**	**Value**
20	ce	4a7c5b63 => 63 5b 7c 4a = 1666939978s	04=>Periodic report PIR: 01=>Occupied; Temperature: 0e01=>010e = 270*0.1=27°C Humidity: 7b => 123*0.5 = 61.5%RH

Downlink Commands

This device supports downlink commands for configuration and control. The downlink application port is 85 by default.

General Setting

Item	Channel	Type	Byte	Description
Reboot	ff	10	1	ff
Report Interval	ff	8e	3	**Byte 1**: 00 **Byte 2-3**: UINT16, Unit: minute
Time to report vacancy	ff	95	2	Unit: s, Range: 60-3600
LED Indicator	ff	2f	1	00: disable; 01: enable
Data Storage	ff	68	1	00: Disable, 01: Enable
Data Retransmission	ff	69	1	00: Disable, 01: Enable
Data Retrans-mission Interval	ff	6a	3	**Byte 1**: 00 **Byte 2-3**: UINT16, Unit: s, Range: 30~1200, Default: 600

Example:

1. Reboot the device.

ff10ff

2. Set report interval as 20 minutes.

ff8e001400		
Channel	**Type**	**Value**
ff	8e	1400=>0014=20minutes

Milesight D2D Setting

Item	Channel	Type	Byte	Description
D2D Feature	ff	84	1	00: disable; 01: enable
D2D Settings	ff	96	8	Byte 1: 00-All threshold conditions;

Item	Channel	Type	Byte	Description
				01-Occupancy&Temperature threshold triggered; 02-Occupied; 03-Vacant; 04-Temperature threshold triggered; 05-Temperature threshold is lifted Byte 2: 00-disable, 01-enable Byte 3: 00-disable LoRa Uplink, 01-enable LoRa Uplink Byte 4-5: D2D control command Byte 6-7: control time, unit: min Byte 8: 00-disable control time, 01-enable control time

Example

Set D2D settings.

ff96 01 01 01 04e0 0500 01		
Channel	**Type**	**Value**
ff	96	01=>Occupied&Temperature threshold triggered; 01=>Enable; 01=>Enable LoRa Uplink; 04 e0=>e0 04, Control Command is e0 04; 05 00=>00 05, Control time is 5 mins; 01=>Enable Control Time

Alarm Setting

Item	Channel	Type	Byte	Description
Threshold Alarm	ff	06	9	Byte1: **Bit0~Bit2:** 000-disable 001-below (minimum threshold) 010-above (maximum threshold) 011-within 100-below or above **Bit3~Bit7:** 11001 Byte 2-3: Min. value Byte 4-5: Max. value Byte 6-9: 00000000

Example

Set threshold alarm.

ff06 cc 9600 2c01 00000000		
Channel	**Type**	**Value**
ff	06	cc=>11001100, 100=below or above Min. value: 96 00=>00 96=15°C Max. value: 2c 01=>01 2c=30°C

Historical Data Enquiry

The device supports data retrievability feature to send downlink command to enquire the historical data stored in the device. Before that, ensure the device time is correct and data storage feature was enabled to store data.

Command Format:

Item	Channel	Type	Byte	Description
Enquire Data in Time Point	fd	6b	4	Unix timestamp, Unit: s
Enquire Data in Time Range	fd	6c	8	Byte 1-4: Start timestamp, Unit: s Byte 5-8: End timestamp, Unit: s
Stop Query Data Report	fd	6d	1	ff
Data Retrieva-bility Interval	ff	6a	3	Byte 1: 01 Byte 2-3: UINT16, Unit: s, Range: 30~1200, Default: 60

Reply Format:

Item	Channel	Type	Byte	Description
Enquiry Result	fc	6b/6c	1	00: Enquiry success. The device will report the historical data according to data retrievability interval. 01: Time point or time range invalid 02: No data in this time or time range

Note:

1. Use Unix Timestamp Converter to calculate the time.
2. The device only uploads no more than 300 data records per range enquiry.

3. When enquiring the data in time point, it will upload the data which is closest to the search point within the reporting interval range. For example, if the device's reporting interval is 10 minutes and users send command to search for 17:00's data, if the device find there is data stored in 17:00, it will upload this data; if not, it will search for data between 16:50 to 17:10 and upload the data which is closest to 17:00.

Example:

Enquire the historical data in a time range.

fd6c 64735b63 7c885b63		
Channel	**Type**	**Value**
fd	6c	Start time: 64 73 5b 63 => 63 5b 73 64 = 1666937700s End time: 7c 88 5b 63 => 63 5b 88 7c = 1666943100s

Reply:

fc6c00		
Channel	**Type**	**Value**
fc	6c	00: Enquiry success

20ce 4a7c5b63 0401 0e01 7b			
Channel	**Type**	**Time Stamp**	**Value**
20	ce	4a7c5b63 => 63 5b 7c 4a = 1666939978s	04=>Periodic report PIR: 01=>Occupied; Temperature: 0e01=>010e = 270*0.1=27°C Humidity: 7b => 123*0.5 = 61.5%RH

Chapter 9. Services

Milesight provides customers with timely and comprehensive technical support services. End-users can contact your local dealer to obtain technical support. Distributors and resellers can contact directly with Milesight for technical support.

Technical Support Mailbox: iot.support@milesight.com

Online Support Portal: https://support.milesight-iot.com

Resource Download Center: https://www.milesight.com/iot/resources/download-center/

MILESIGHT CHINA

TEL: +86-592-5085280

FAX: +86-592-5023065

Add: Building C09, Software Park Phase III, Xiamen 361024, Fujian, China