ENGLISH

IN485DAI001A000 User Manual

Daikin Altherma 3 Air-to-water Heat Pumps to BACnet MS/TP and Modbus RTU

USER MANUAL
Version 1.0.2
Publication date 2025-07-18

14 rue Edouard Petit
42000 St-Etienne
Tel : +33 477 92 03 56
Email : contact@rg2i.com
www.rg2i.com

Copyright © 2025 Intesis

Disclaimer

The information in this document is for informational purposes only. Please inform HMS Networks of any inaccuracies or omissions found in this document. HMS Networks disclaims any responsibility or liability for any errors that may appear in this document.

HMS Networks reserves the right to modify its products in line with its policy of continuous product development. The information in this document shall therefore not be construed as a commitment on the part of HMS Networks and is subject to change without notice. HMS Networks makes no commitment to update or keep current the information in this document.

The data, examples and illustrations found in this document are included for illustrative purposes and are only intended to help improve understanding of the functionality and handling of the product. In view of the wide range of possible applications of the product, and because of the many variables and requirements associated with any particular implementation, HMS Networks cannot assume responsibility or liability for actual use based on the data, examples or illustrations included in this document nor for any damages incurred during installation of the product. Those responsible for the use of the product must acquire sufficient knowledge in order to ensure that the product is used correctly in their specific application and that the application meets all performance and safety requirements including any applicable laws, regulations, codes and standards. Further, HMS Networks will under no circumstances assume liability or responsibility for any problems that may arise as a result from the use of undocumented features or functional side effects found outside the documented scope of the product. The effects caused by any direct or indirect use of such aspects of the product are undefined and may include e.g. compatibility issues and stability issues.

Table of Contents

1. Description, Compatible AC systems, and Order Codes 1

2. General Information 2

2.1. Intended Use of the User Manual 2
2.2. General Safety Information 2
2.3. Admonition Messages and Symbols 3

3. Quickstart Guide for the IN485DAI001A000 Gateway 4

4. Overview 5

4.1. Inside the Package 6
4.2. Main Features 6
4.3. Gateway Capacity 6
4.4. General Functionality 6

5. Hardware 7

5.1. DIP Switches 7
5.2. Mounting 9
5.3. Connection Procedure 10
5.4. Coexistence of the Gateway with a Remote Controller 11
5.5. Connection to an External Power Supply 12
5.6. LED Indicators 13
5.7. Technical Specifications 14
5.8. Dimensions 14

6. Restore the Factory Settings 15

7. BACnet Specifications 16

7.1. Supported Object Types 16
7.2. Gateway Objects 16
7.3. General Objects 17
7.4. Zone Objects 18
7.5. Zone 1 Objects 19
7.6. Room Objects 20
7.7. Domestic Hot Water Objects 21
7.8. Outdoor Unit Temperature Objects 22
7.9. Extra Signals for the BACnet Configuration 23

8. Modbus Specifications 24

8.1. Implemented Modbus Functions 24
8.1.1. Modbus Physical Layer 24
8.2. Modbus Registers 24
8.2.1. Gateway Registers 25
8.2.2. General Registers 26
8.2.3. Zone Registers 27
8.2.4. Main Zone Registers 27
8.2.5. Room Registers 29
8.2.6. Domestic Hot Water Registers 30
8.2.7. Outdoor Unit Temperature Registers 31
8.2.8. Extra Registers 31

9. Virtual Temperature 32

10. Error Codes 35
10.1. Gateway Error Codes 35
10.2. Daikin Altherma 3 Error Codes 35

1. Description, Compatible AC systems, and Order Codes

BACnet MS/TP and Modbus RTU gateway for Daikin Altherma 3 air-to-water heat pumps.

Compatible with Altherma 3 heat pumps commercialized by Daikin.

Use the compatibility tool to get a complete list of compatible units: https://compatibility.intesis.com/

ORDER CODE	LEGACY ORDER CODE
IN485DAI001A000	-

2. General Information

2.1. Intended Use of the User Manual

This manual contains the main features of this gateway and the instructions for its appropriate installation, configuration, and operation.

Any person who installs, configures, or operates this gateway or any associated equipment should be aware of this manual's contents.

Keep this manual for future reference during the installation, configuration, and operation.

2.2. General Safety Information

IMPORTANT
Follow these instructions carefully. Improper work may seriously harm your health and damage the gateway and/or any other equipment connected to it.

Only technical personnel, following these instructions and the country legislation for installing electrical equipment, can install and manipulate this gateway.

Install this gateway indoors, in a restricted access location, avoiding exposure to direct solar radiation, water, high relative humidity, or dust.

Preferably, mount this gateway on a DIN rail inside a grounded metallic cabinet, following the instructions in this manual.

If mounting on a wall, firmly fix this gateway on a non-vibrating surface, following the instructions in this manual.

Connect this gateway only to networks without routing to the outside plant.

All communication ports are considered for indoor use and must only be connected to SELV circuits.

Disconnect all systems from power before manipulating and connecting them to the gateway.

Respect the expected polarity of power and communication cables when connecting them to the gateway.

Take the necessary antistatic precautions before manipulating the gateway to avoid electrostatic discharges.

Safety instructions in other languages can be found here.

2.3. Admonition Messages and Symbols

CAUTION
Instruction that must be followed to avoid a potentially hazardous situation that, if not avoided, could result in minor or moderate injury.

IMPORTANT
Instruction that must be followed to avoid a risk of reduced functionality and/or damage to the equipment or to avoid a network security risk.

NOTE
Additional information which may facilitate installation and/or operation.

TIP
Helpful advice and suggestions.

NOTICE
Remarkable Information.

3. Quickstart Guide for the IN485DAI001A000 Gateway

IMPORTANT
Disconnect all systems from power before connecting them to the gateway.

1. Configure the gateway using the built-in DIP switches. See details in DIP Switches (page 7).
2. Mount the gateway in the desired installation site. This gateway can be mounted over a DIN rail or a wall. See details in Mounting (page 9).

   NOTE
   DIN rail mounting inside a grounded cabinet or metal enclosure is recommended.

3. Connect the gateway to the BACnet MS/TP or Modbus RTU network via its EIA-485 port.
4. Connect the gateway to the Daikin user interface bus (P1P2). See details in Connection Procedure (page 10).
5. Check the communication performance between the BACnet/Modbus bus, the gateway, and the Daikin Altherma 3 unit through the gateway's LED indicators. See details in LED Indicators (page 13).
6. The Intesis gateway is ready to be used in your system.

POWER SUPPLY
With some exceptions, there is usually no need for an external power supply. See Connection to an External Power Supply (page 12).

4. Overview

NOTE
You can set the IN485DAI001A000 as a BACnet MS/TP or a Modbus RTU server gateway using the SW1-5 (DIP switch 1, position 5). See DIP Switches (page 7).

Figure 1. Integration of Daikin Altherma 3 units into a BACnet MS/TP installation using the Intesis IN485DAI001A000 gateway

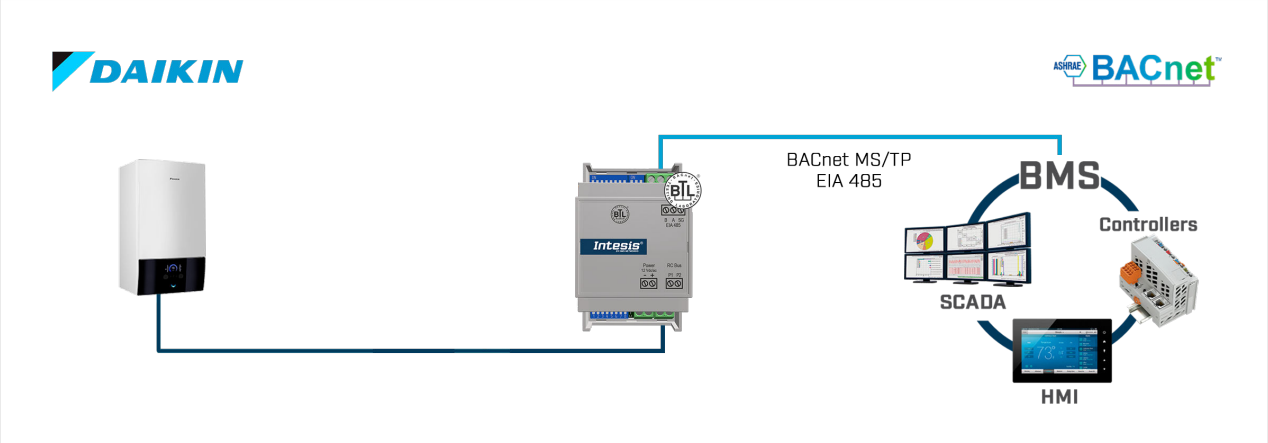

Figure 2. Integration of Daikin Altherma 3 units into a Modbus RTU installation using the Intesis IN485DAI001A000 gateway

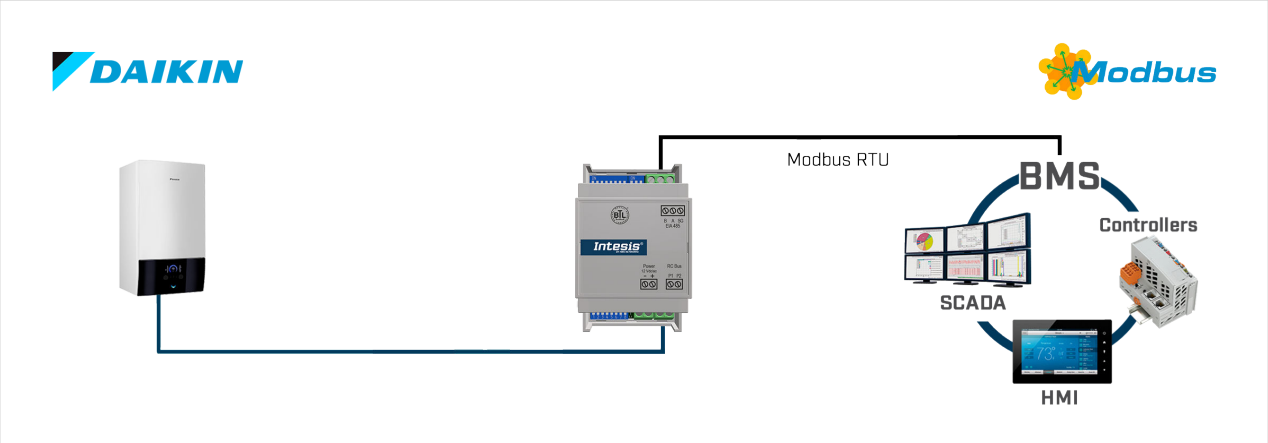

NOTE
This document assumes that the user is familiar with BACnet, Modbus, and Daikin air-to-water heat pump technologies and their technical terms.

4.1. Inside the Package

Items included:

- Intesis IN485DAI001A000 gateway
- Installation Guide

4.2. Main Features

- BTL mark ensures full interoperability with BACnet devices.
- Supports BACnet MS/TP and Modbus RTU.
- Configuration with onboard DIP switches.
- Quick and easy installation: Set the DIP switches, plug, and play.
- External power supply not required.
- Reduced dimensions (HxWxD): 93 x 53 x 58 mm / 3.7 x 2.1 x 2.3”.
- Mountable on DIN rail or wall.
- Total control and monitoring of the Altherma 3 unit from the BACnet or Modbus system, including the unit’s internal variables, running hours counter (for filter maintenance control), and error indication, among many other functions.
- Three-year warranty.

4.3. Gateway Capacity

This Intesis gateway can integrate one single Daikin Altherma 3 air-to-water unit.

NOTE
You can connect several air-to-water units to the gateway, but they will perform as one. This means you cannot send different commands to different units.

4.4. General Functionality

With this Intesis gateway, you can easily integrate a Daikin Altherma 3 air-to-water unit into an installation based on BACnet MS/TP or Modbus RTU. For this integration, the gateway acts as an additional user interface set as SUB, with the Daikin user interface (MMI) set as MAIN.

NOTE
A Daikin user interface (MMI) set as MAIN must be present on the bus. This controller is located on the Daikin Altherma 3 indoor unit, except for the Daikin Altherma 3 Monobloc model where it must be installed separately.

A wide range of signals can be controlled and monitored, including general signals, zone signals, domestic hot water signals, and more.

The configuration of the gateway is carried out in a fast and straightforward manner via DIP switches.

5. Hardware

5.1. DIP Switches

All configuration parameters of the gateway are set exclusively using its DIP switches, as detailed in the following tables. No software interface or external configuration tool is required.

IMPORTANT
Ensure the gateway is powered off before adjusting the DIP switches to avoid configuration errors or hardware damage.

The gateway includes three DIP switches: SW1 (8 switches) at the bottom and SW2 (8 switches) and SW3 (3 switches) at the top.

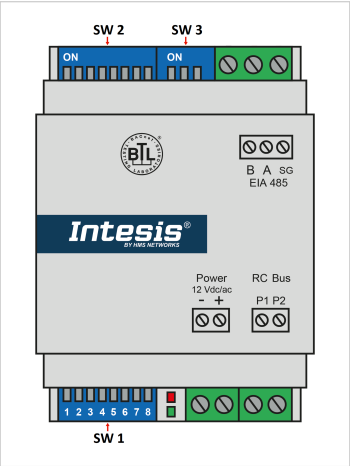

*Table 1. **SW1** (P1 to P4): Not used; (P5): Control system selection; (P6 to P8): BACnet MS/TP or Modbus RTU baudrate*

Position								Description	
1	**2**	**3**	**4**	**5**	**6**	**7**	**8**	**BACnet**	**Modbus**
X	X	X	X	OFF	X	X	X	BACnet MS/TP enabled	
X	X	X	X	ON	X	X	X	Modbus RTU enabled (default)	
X	X	X	X	X	OFF	OFF	OFF	Autobaudrate (default)	2400 bps (default)
X	X	X	X	X	ON	OFF	OFF	9600 bps	4800 bps
X	X	X	X	X	OFF	ON	OFF	19200 bps	9600 bps
X	X	X	X	X	ON	ON	OFF	38400 bps	19200 bps
X	X	X	X	X	OFF	OFF	ON	57600 bps	38400 bps
X	X	X	X	X	ON	OFF	ON	76800 bps	57600 bps
X	X	X	X	X	OFF	ON	ON	115200 bps	76800 bps
X	X	X	X	X	ON	ON	ON	Autobaudrate	115200 bps

NOTE
When **Autobaudrate** is selected, the gateway scans the network to find other BACnet MS/TP devices and match their baud rate. Once detected, the baud rate will only be modified after a reset/reboot of the gateway.

Table 2. ***SW2 (BACnet MS/TP)*** *(P1 to P7): BACnet MS/TP MAC address; (P8): Temperature unit (°C/°F)*

Position								BACnet address	Description
1	2	3	4	5	6	7	8		
OFF	OFF	OFF	OFF	OFF	OFF	OFF	X	0	-
ON	OFF	OFF	OFF	OFF	OFF	OFF	X	1	-
OFF	ON	OFF	OFF	OFF	OFF	OFF	X	2	-
ON	ON	OFF	OFF	OFF	OFF	OFF	X	3	-
...								...	-
ON	OFF	ON	ON	ON	ON	ON	X	125	-
OFF	ON	ON	ON	ON	ON	ON	X	126	-
ON	ON	ON	ON	ON	ON	ON	X	127	-
X	X	X	X	X	X	X	OFF	-	Temp. in °C (default)
X	X	X	X	X	X	X	ON	-	Temp. in °F

Table 3. ***SW2 (Modbus RTU)*** *(P1 to P6): Modbus server address; (P7): Degree decimals setting; (P8): Temperature unit (°C/°F)*

Position								Modbus address	Description
1	2	3	4	5	6	7	8		
ON	OFF	OFF	OFF	OFF	OFF	X	X	1	-
OFF	ON	OFF	OFF	OFF	OFF	X	X	2	-
ON	ON	OFF	OFF	OFF	OFF	X	X	3	-
...								...	-
ON	OFF	ON	ON	ON	ON	X	X	61	-
OFF	ON	ON	ON	ON	ON	X	X	62	-
ON	ON	ON	ON	ON	ON	X	X	63	-
X	X	X	X	X	X	OFF	X	-	Temp. in degrees x1 (default)
X	X	X	X	X	X	ON	X	-	Temp. in degrees x10. Example: 19.2°=192
X	X	X	X	X	X	X	OFF	-	Temp. in °C (default)
X	X	X	X	X	X	X	ON	-	Temp. in °F

Table 4. ***SW3*** *(P1 to P3): BACnet/Modbus polarization and termination resistor*

Position			Description
1	2	3	
OFF	X	X	EIA-485 bus without termination resistor. The gateway is not at one end of the EIA-485 bus (default value)
ON	X	X	120 Ω termination resistor active. The gateway is at one end of the EIA-485 bus
X	OFF	OFF	No bus polarization (default value)
X	ON	ON	Bus polarization active

IMPORTANT

Observe the **ON** indicator on each DIP switch as a reference.

The DIP switches configuration will only take effect after repowering the gateway.

5.2. Mounting

Mount the gateway over a DIN rail or over a wall.

IMPORTANT
Before mounting, please ensure that the chosen installation place preserves the gateway from direct solar radiation, water, high relative humidity, or dust.

IMPORTANT
Leave enough clear space to wire the gateway easily and for the subsequent manipulation of elements such as connectors, DIP switches, etc.

IMPORTANT
Do not mount the gateway in air-handling units or conducts.

NOTE
DIN rail mounting inside a grounded metallic cabinet is recommended.

DIN rail mounting

1. Fit the gateway's top-side clip in the upper edge of the DIN rail.
2. Press the low side of the gateway gently to lock it in the DIN rail.
3. Make sure the gateway is firmly fixed.

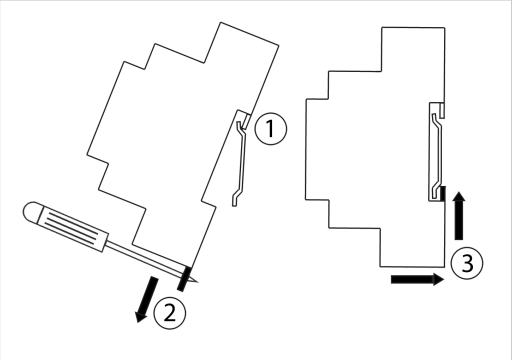

NOTE
For some DIN rails, to complete step 2, you may need a small screwdriver or similar to pull the bottom clip down.

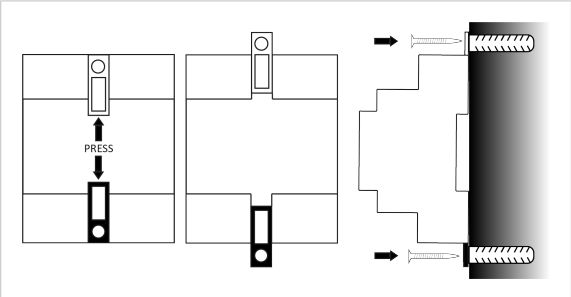

Wall mounting

1. Press the rear panel clips outwards until you hear a *click*.
2. Use the clip holes to screw the gateway to the wall.
3. Make sure the gateway is firmly fixed.

IMPORTANT
For reasons of security, the maximum height for wall mounting is two meters (6.5 feet). Use M3 screws, 25 mm (1") length.

5.3. Connection Procedure

CAUTION
Disconnect all systems from power before connecting them to the gateway.

IMPORTANT
Keep communication cables as far away as possible from power and ground cables. Never bundle them together.

NOTE
Mount the gateway in the desired place before wiring it.

Figure 3. Wiring diagram

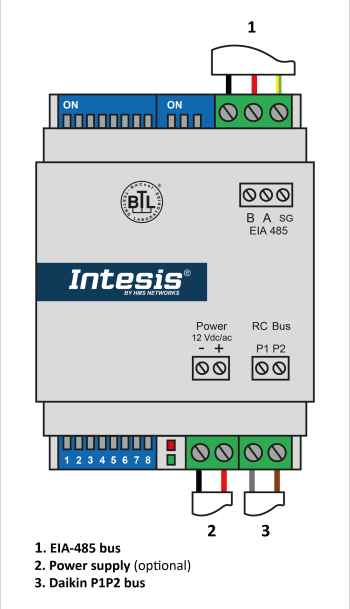

Connection to the wired remote controller (RC) bus

1. Connect the gateway at any point of the P1P2 bus.

NOTE

- The P1P2 bus is a two-wire bus used to connect the indoor unit and a user interface.
- This connection has no specific polarity.
- The maximum length for the P1P2 bus is 200 m (656 ft).

Connecting the gateway to the BACnet MS/TPModbus RTU bus

2. Connect the BACnet MS/TP or Modbus RTU bus to the EIA-485 port of the gateway.

IMPORTANT
Observe polarity: B-, A+, and SG for signal ground.

IMPORTANT

- EIA-485 bus doesn't allow loop or star topologies.
- Maximum length for the EIA-485 bus is 1200 meters (4000 feet).

EIA-485 BUS. TERMINATION RESISTORS AND FAIL-SAFE BIASING MECHANISM
The EIA-485 bus requires a 120Ω termination resistor at each end of the bus to avoid signal reflections.

In order to prevent fail status detections by the receivers, which are "listening" to the bus, a fail-safe biasing mechanism is required when all the transmitters' outputs are in three-state (high impedance). This mechanism provides a safe status (a correct voltage level) in the bus when all the transmitters' outputs are in three-state.

The IN485DAI001A000 gateway includes an on-board terminator resistor of 120Ω that can be connected to the EIA-485 bus by using DIP switch SW3.

- **SW3, Position 1:**
  ON: 120 Ω termination active.
  OFF: 120 Ω termination inactive (default position).

Some BACnet MS/TP / Modbus RTU EIA-485 Master devices can also provide internal 120Ω termination resistor and/or fail-safe biasing. Consult the technical documentation of the Master device connected to the EIA-485 network in each case.

If the termination resistor is enabled and you install the gateway at one of the ends of the bus, do not install an additional termination resistor at that end.

To know more, refer to the document Polarity Issues in RS485 Networks.

3. Reconnect all systems to power.

5.4. Coexistence of the Gateway with a Remote Controller

This gateway acts as an additional user interface in the Daikin Altherma 3 installation. It does not replace the Daikin main user interface, which is still required for operation. The gateway's role is set as follower[1] by default; no further action is required.

NOTE
[1] We use the terms header and follower to designate the roles, also known as master and slave or main and sub.

5.5. Connection to an External Power Supply

IMPORTANT
In most cases, this gateway is powered through the remote controller bus itself, and there is no need to connect an external power supply. However, depending on the number and type of remote controllers installed, the bus could not supply the needed power.

TIP
Some signs indicating there is not enough power in the bus may include, for example, a malfunction of the remote controllers' display or in its performance.

If that's the case, connect a 12 VDC/AC SELV-rated NEC class 2 or Limited Power Source (LPS) power supply in the gateway's Power connector.

IMPORTANT
Respect polarity.

Figure 4. Power connector

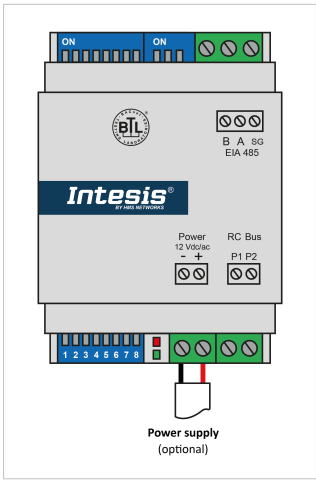

5.6. LED Indicators

There are two LEDs at the lower side of the gateway, between the DIP switch block SW1 and the **Power** connector.

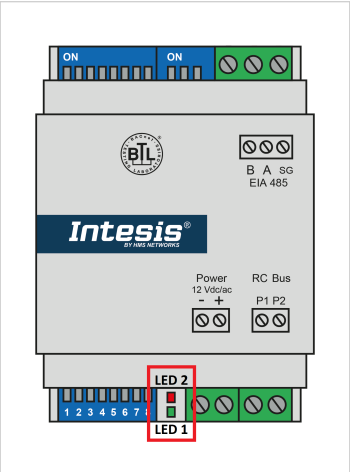

When powering the gateway up, both LEDs blink once and then turn off. After that, LEDs will behave as described in the table below:

LED	Status	Description
When the gateway is set for BACnet MS/TP		
L1 Green	ON	EIA-485 bus link performed
	Blinking	Activity on the EIA-485 bus
	OFF	EIA-485 bus link not performed
L2 Red	ON	Altherma 3-gateway communication error
	Blinking	Altherma 3 unit error
	Flashing	Altherma 3-gateway communication OK
When the gateway is set for Modbus RTU		
L1 Green	Blinking	Communication error Altherma 3 unit error
	Flashing	Normal operation
L1 Green + L2 Red	Pulse	Gateway startup
LED PATTERNS: **Flickering:** 90 % on / 10 % off **Blinking:** 50 % on / 50 % off **Flashing:** 10 % on / 90 % off **Pulse:** 5 sec on / then off		

5.7. Technical Specifications

Housing	Plastic, type PC (UL 94 V-0) Net dimensions (HxWxD): 93 x 53 x 58 mm / 3.7 x 2.1 x 2.3” Color: Light grey. RAL 7035
Net weight	85 g (3 oz)
Terminal wiring	Wire cross-section/gauge per terminal: One core: 0.2 .. 2.5 mm^2 (24 .. 11 AWG) Two cores: 0.2 .. 1.5mm^2 (24 .. 15 AWG) Three cores: Not permitted Use solid or stranded wires (twisted or with ferrule).
External power supply (optional)	SELV-rated NEC class 2 or limited power source (LPS) power supply 12 VDC/AC; 0.1 A
Mounting	DIN rail or wall
EIA-485 port **BACnet mMS/TP - Modbus RTU**	1 x pluggable terminal block (3 poles: B, A, and SG)
AC unit port	1 x RC bus pluggable terminal block (2 poles: P1 and P2)
LED indicators	2 x Communication status
DIP switches	SW1: Baudrate configuration SW2: BACnet/Modbus address and temperature unit SW3: Bus polarization and termination
Operational temperature	0 to +70°C / 32 to 158°F
Storage temperature	-20 to 85°C / -4 to 185°F
Operational and storage humidity	5% to 95% RH non-condensing
Isolation between comm. ports	1000 VDC

5.8. Dimensions

Net dimensions (HxWxD):

Millimeters: 93 x 53 x 58 mm

Inches: 3.66 x 2.08 x 2.28"

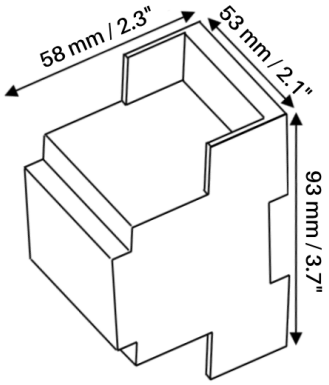

IMPORTANT
Leave enough clear space to wire the gateway easily and for the subsequent manipulation of elements such as connectors, DIP switches, etc.

6. Restore the Factory Settings

To restore the gateway to its factory settings, proceed as follows:

1. Set all switches from DIP switches SW1 and SW2 to **ON**.
2. Reboot the gateway:
   a. Power it OFF.
   b. Power it ON.

   NOTE
   To power the gateway OFF, disconnect it from the AC unit and from the power supply, if there is one. To power the gateway ON, reestablish those connections.

3. After the reboot, LEDs will blink with the SOS Morse sequence:
   a. Three short blinks
   b. Three longer blinks
   c. Three short blinks
4. Set all switches from DIP switches SW1 and SW2 to **OFF** within 30 seconds.

   IMPORTANT
   If you take longer than 30 seconds, all LEDs will turn off, meaning that the procedure has failed. To retry it, go to step 1 and begin the procedure again.

After this procedure, the LED will flash red, meaning that the gateway has been restored to the factory settings.

7. BACnet Specifications

The following sections provide the gateway's specifications when it is set for BACnet MS/TP.

7.1. Supported Object Types

Object type	ID
Analog-Input	0
Analog-Output	1
Binary-Input	3
Binary-Output	4
Device	8
Multistate-Input	13
Multistate-Output	14

7.2. Gateway Objects

Name	Possible values	Type	Instance
IN485DAI001A000[1]	-	8-Device	246000
[1] This object identifies the gateway in the BACnet system, either automatically or manually: • **Automatic addressing (default)**: This mode uses a base address of 246000 + the MAC address number selected in the DIP switch SW2. • **Manual addressing**: The gateway switches to this mode when the **Object_Identifier** property of this object is overwritten from the BACnet side. If so, the DIP switch SW2 configuration will not be considered for the Device instance calculation until the gateway is reset to the factory settings. See Restore the Factory Settings (page 15). The **Object_Name** and **Description** properties of this object can be written. By default, their values are: • **Object_Name**: IN485DAI001A000 • **Description**: DaikinA2W to BACnet MSTP interface			
SerialNumber	0..9999999	0-Analog Input	0
DIP_SW_1_status[2]	0..255	0-Analog Input	86
[2] It indicates the status of the DIP switch block SW1 in decimal value. To get the status of each individual switch (position) of SW1, just convert it to binary. The gateway reads this value only when booting up.			
DIP_SW_2_status[3]	0..255	0-Analog Input	87
[3] It indicates the status of the DIP switch block SW2 in decimal value. To get the status of each individual switch (position) of SW2, just convert it to binary. The gateway reads this value only when booting up.			

7.3. General Objects

Name	Possible values	Type	Instance
ErrorFlag_status	0: No error 1: Error	3-Binary Input	1
ErrorCode_status	0: No error any other value: Error code	0-Analog Input	2
ErrorSubCode_status	0: No error Any other value: Error code	0-Analog Input	3
OperatingTimeCountSec_command[3]	0 .. 2147483647 (s)	1-Analog Output	1
[3] Write a value of **0** in this object to manually reset the counter.			
OperatingTimeCountSec_status[2]	0 .. 2147483647 (s)	0-Analog Input	7
[2] It reports the accumulated operating time of the heat pump in seconds. **IMPORTANT** This object's value increases when either of the following extra-type objects is enabled: • CompressorOperation_status • CirculationPumpOperation_status See Extra Signals for the BACnet Configuration (page 23) for more information on these two registers. When the maximum value (2147483647 seconds) is reached, this object is reset to 0.			
OperatingTimeCountHour_command[5]	0 .. 65535 (h)	1-Analog Output	2
[5] Write a value of **0** in this object to manually reset the counter.			
OperatingTimeCountHour_status[4]	0 .. 65535 (h)	0-Analog Input	8
[4] It reports the accumulated operating time of the heat pump in hours. **IMPORTANT** This object's value increases when either of the following extra-type objects is enabled: • CompressorOperation_status • CirculationPumpOperation_status See Extra Signals for the BACnet Configuration (page 23) for more information on these two registers. When the maximum value (65535 hours) is reached, this object is reset to 0.			

Name	Possible values	Type	Instance
RemoteControlLock_command[1]	0: Unlocked 1: Locked	4-Binary Output	3
[1] It enables or disables the control of the Altherma 3 unit through its remote control. If a value of **1** is written in this object, the Altherma 3 unit can only be controlled through the BMS, and any command sent through any remote control will have no effect.			
RemoteControlLock_status	0: Unlocked 1: Locked	3-Binary Input	4
Operation_status[2]	0: Not operating 1: Operating	3-Binary Input	6
[2] This object reports whether there is a demand for climate and/or DHW, and thus whether the system is operating.			

7.4. Zone Objects

Name	Possible values	Type	Instance
ZonesOnOff_command	0: Off 1: On	4-Binary Output	5
ZonesOnOff_status	0: Off 1: On	3-Binary Input	7
ZonesOperation_status[1]	0: Not operating 1: Operating	3-Binary Input	8
[1] This object reports whether there is a demand for climate, and thus whether the climate system is operating.			
ZonesMode_command[2]	1: Heat 2: Cool	14-Multistate Output	0
[2] Use this object to set the mode for the climate.			
ZonesMode_status	1: Heat 2: Cool	13-Multistate input	0

7.5. Zone 1 Objects

Name	Possible values	Type	Instance
Zone1ControlType_status	1: Outlet Water Temperature 2: External Ambient Temperature 3: Room Thermostat Ambient Temperature	13-Multistate Input	2
Zone1SetpointMode_command	1: Fixed 2: Weather Dependent	14-Multistate Output	2
Zone1SetpointMode_status	1: Fixed 2: Weather Dependent	13-Multistate Input	3
Zone1SetpointModeType_status	0: Weather-dependent Heating, Fixed Cooling 1: Weather-dependent Heating and Cooling	3-Binary Input	12
Zone1TempSetpoint_command[1]	Value in °C or °F	1-Analog Output	3
[1] This object is used to request a setpoint temperature from the BACnet BMS for the main zone.			
Zone1TempSetpoint_status	Value in °C or °F	0-Analog Input	9
Zone1TempSetpointLowCustomerLimitHeat_command[2]	Value in °C or °F	1-Analog Output	4
Zone1TempSetpointLowCustomerLimitHeat_status	Value in °C or °F	0-Analog Input	10
Zone1TempSetpointUpCustomerLimitHeat_command[2]	Value in °C or °F	1-Analog Output	5
Zone1TempSetpointUpCustomerLimitHeat_status	Value in °C or °F	0-Analog Input	11
Zone1TempSetpointLowCustomerLimitCool_command[2]	Value in °C or °F	1-Analog Output	6
Zone1TempSetpointLowCustomerLimitCool_status	Value in °C or °F	0-Analog Input	12
Zone1TempSetpointUpCustomerLimitCool_command[2]	Value in °C or °F	1-Analog Output	7
Zone1TempSetpointUpCustomerLimitCool_status	Value in °C or °F	0-Analog Input	13
[2] With these objects, you can customize limits to establish a range of temperatures for both heat and cool modes. These limits cannot surpass the limits supported by the Altherma 3 unit. See the following four objects.			
Zone1TempSetpointUnitLowLimitHeat_status[3]	Value in °C or °F	0-Analog Input	14
Zone1TempSetpointUnitUpLimitHeat_status[3]	Value in °C or °F	0-Analog Input	15
Zone1TempSetpointUnitLowLimitCool_status[3]	Value in °C or °F	0-Analog Input	16
Zone1TempSetpointUnitUpLimitCool_status[3]	Value in °C or °F	0-Analog Input	17
[3] These objects report the maximum and minimum temperatures supported by the Altherma 3 unit for both heat and cool modes These are absolute limits that cannot be surpassed by means of any other object.			
Zone1TempSetpointAppliedLowLimitHeat_status[4]	Value in °C or °F	0-Analog Input	18

Name	Possible values	Type	Instance
Zone1TempSetpointAppliedUpLimitHeat_status[4]	Value in °C or °F	0-Analog Input	19
Zone1TempSetpointAppliedLowLimitCool_status[4]	Value in °C or °F	0-Analog Input	20
Zone1TempSetpointAppliedUpLimitCool_status[4]	Value in °C or °F	0-Analog Input	21
[4] These objects report the limits currently applied for both heat and cool modes.			
Zone1ScheduledMode_command	0: Off 1: On	4-Binary Output	9
Zone1ScheduledMode_status	0: Off 1: On	3-Binary Input	14

7.6. Room Objects

Name	Possible values	Type	Instance
Room1TempSetpoint_command[1]	Value in °C or °F	1-Analog Output	10
[1] This object is used to request a setpoint temperature from the BACnet BMS for the room.			
Room1TempSetpoint_status	Value in °C or °F	0-Analog Input	27
Room1TempSetpointCustomLowLimitHeat_command[2]	Value in °C or °F	1-Analog Output	11
Room1TempSetpointCustomLowLimitHeat_status	Value in °C or °F	0-Analog Input	28
Room1TempSetpointCustomUpLimitHeat_command[2]	Value in °C or °F	1-Analog Output	12
Room1TempSetpointCustomUpLimitHeat_status	Value in °C or °F	0-Analog Input	29
Room1TempSetpointCustomLowLimitCool_command[2]	Value in °C or °F	1-Analog Output	13
Room1TempSetpointCustomLowLimitCool_status	Value in °C or °F	0-Analog Input	30
Room1TempSetpointCustomUpLimitCool_command[2]	Value in °C or °F	1-Analog Output	14
Room1TempSetpointCustomUpLimitCool_status	Value in °C or °F	0-Analog Input	31
[2] With these objects, you can customize limits to establish a range of temperatures for both heat and cool modes. These limits cannot surpass the limits supported by the Altherma 3 unit. See the following four objects.			
Room1TempSetpointUnitLowLimitHeat_status[3]	Value in °C or °F	0-Analog Input	32
Room1TempSetpointUnitUpLimitHeat_status[3]	Value in °C or °F	0-Analog Input	33
Room1TempSetpointUnitLowLimitCool_status[3]	Value in °C or °F	0-Analog Input	34
Room1TempSetpointUnitUpLimitCool_status[3]	Value in °C or °F	0-Analog Input	35
[3] These objects report the maximum and minimum temperatures supported by the Altherma 3 unit for both heat and cool modes These are absolute limits that cannot be surpassed by means of any other object.			
Room1TempSetpointAppliedLowLimitHeat_status[4]	Value in °C or °F	0-Analog Input	36
Room1TempSetpointAppliedUpLimitHeat_status[4]	Value in °C or °F	0-Analog Input	37
Room1TempSetpointAppliedLowLimitCool_status[4]	Value in °C or °F	0-Analog Input	38
Room1TempSetpointAppliedUpLimitCool_status[4]	Value in °C or °F	0-Analog Input	39
[4] These objects report the limits currently applied for both heat and cool modes.			
Room1TempBACnetRoomThermAmbientRef_command[5]	Value in °C or °F	1-Analog Output	15
[5] Use this object to write the ambient temperature provided by a thermistor installed in the BACnet system. Once a valid value is written in this object, the virtual temperature function is activated.			

Name	Possible values	Type	Instance
Room1TempBACnetRoomThermAmbientRef_status	Value in °C or °F	0-Analog Input	41
Room1AntifrostMode_command	0: Off 1: On	4-Binary Output	10
Room1Antifrost_status	0: Off 1: On	3-Binary Input	15
Room1AntifrostRoomSetpointTempHeat_command	Value in °C or °F	1-Analog Output	16
Room1AntifrostRoomSetpointTempHeat_status	Value in °C or °F	0-Analog Input	42

7.7. Domestic Hot Water Objects

Name	Possible values	Type	Instance
DHWOnOff_command	0: Off 1: On	4-Binary Output	15
DHWOnOff_status	0: Off 1: On	3-Binary Input	22
DHWOperation_status[1]	0: Not Operating 1: Operating	3-Binary Input	23
[1] This object reports whether there is a demand for DHW, and thus whether the DHW system is operating.			
DHWSetpointMode_command	0: Fixed 1: Weather Dependent	4-Binary Output	16
DHWSetpointMode_status	0: Fixed 1: Weather Dependent	3-Binary Input	24
DHWTempSetpoint_command[2]	Value in °C or °F	1-Analog Output	24
[2] This object is used to request a setpoint temperature for the DHW from the BACnet BMS.			
DHWTempSetpoint_status	Value in °C or °F	0-Analog Input	61
DHWTempSetpointCustomLowLimit_command[3]	Value in °C or °F	1-Analog Output	25
DHWTempSetpointCustomLowLimit_status	Value in °C or °F	0-Analog Input	62
DHWTempSetpointCustomUpLimit_command[3]	Value in °C or °F	1-Analog Output	26
DHWTempSetpointCustomUpLimit_status	Value in °C or °F	0-Analog Input	63
[3] With these objects, you can customize limits to establish a range of temperatures for the DHW. These limits cannot surpass the limits supported by the water tank. See the following two objects.			
DHWTempSetpointTankLowLimit_status[4]	Value in °C or °F	0-Analog Input	64
DHWTempSetpointTankUpLimit_status[4]	Value in °C or °F	0-Analog Input	65
[4] These objects report the maximum and minimum temperatures supported by the water tank. These are absolute limits that cannot be surpassed by means of any other object.			
DHWTempSetpointAppliedLowLimit_status[5]	Value in °C or °F	0-Analog Input	66
DHWTempSetpointappliedUpLimit_status[5]	Value in °C or °F	0-Analog Input	67
[5] These objects report the temperature limits currently applied for the DHW.			

Name	Possible values	Type	Instance
DHWTempTankRef_status[6]	Value in °C or °F	0-Analog Input	68
[6] It reports the reference temperature for the DHW. This temperature is provided by the water tank thermistor(s).			
DHWScheduledMode_status	0: Off 1: On	3-Binary Input	28
DHWPowerfulOperation_command[7]	0: Off 1: On	4-Binary Output	21
[7] It sets the DHW tank's built-in electric resistor on/off.			
DHWPowerfulOperation_status	0: Off 1: On	3-Binary Input	29
DHWDisinfectionMode_status[8]	0: Off 1: On	3-Binary Input	30
[8] It reports the Antilegionella cycle status (on/off).			

7.8. Outdoor Unit Temperature Objects

Name	Possible values	Type	Instance
TempA2WUnitOutdoorAmbientRef_status[1]	Value in °C or °F	0-Analog Input	72
[1] It reports the ambient temperature provided by the outdoor unit.			
TempRefrigerantRef_status[2]	Value in °C or °F	0-Analog Input	73
[2] It reports the refrigerant temperature in the outdoor unit.			
TempOutletWaterRef_status[3]	Value in °C or °F	0-Analog Input	74
[3] It reports the temperature of the water leaving the outdoor unit.			
TempOutletWaterRefPlateHeatExchanger_status[4]	Value in °C or °F	0-Analog Input	75
[4] It reports the temperature of water entering the plate heat exchanger from the outdoor unit			
TempInletWaterRef_status[5]	Value in °C or °F	0-Analog Input	76
[5] It reports the inlet backup heater water temp.			

7.9. Extra Signals for the BACnet Configuration

Name	Possible values	Type	Instance
QuietModeLowNoiseOperation_status[1]	0: Off 1: On	3-Binary Input	32
[1] It reports the Quiet Mode status (on/off).			
CompressorOperation_status[2]	0: Off 1: On	3-Binary Input	40
[2] It reports the compressor status (on/off).			
CompressorOperatingTime_command[3]	0 .. 65535 (h)	1-Analog Output	30
CompressorOperatingTime_status[3]	0 .. 65535 (h)	0-Analog Input	77
[3] This object reports the accumulated operating time of the compressor in hours. Write a value of **0** in the _command object to manually reset the counter. When reaching the maximum value (65535 h), this object is reset to 0.			
CirculationPumpOperation_status[4]	0: Off 1: On	3-Binary Input	41
[4] It reports the circulation pump status (on/off).			
CirculationPumpOperatingTime_command[5]	0 .. 65535 (h)	1-Analog Output	31
CirculationPumpOperatingTime_status[5]	0 .. 65535 (h)	0-Analog Input	78
[5] This object reports the accumulated operating time of the circulation pump in hours. Write a value of **0** in the _command object to manually reset the counter. When reaching the maximum value (65535 h), this object is reset to 0.			
WaterFlowRate_status[6]	0 .. 4294967295 (l/h)	0-Analog Input	79
[6] It reports the water flow rate provided by the flow sensor. When reaching the maximum value (4294967295 l/h), this register is reset to 0.			
WaterPressureDHW_status[7]	0 .. 670 433,28 (Pa)	0-Analog Input	80
[7] It reports the water pressure from the domestic hot water (DHW) tank in pascals.			

8. Modbus Specifications

The following sections provide the gateway's specifications when it is set for Modbus RTU.

8.1. Implemented Modbus Functions

The IN485DAI001A000 gateway implements the following standard Modbus functions:

- 03: Read Holding Registers
- 04: Read Input Registers
- 06: Write Single Register
- 16: Write Multiple Registers

IMPORTANT
Even though function 16 is available, the gateway does not allow writing operations on more than one register with the same request, so the length field when using this function should always be one.

8.1.1. Modbus Physical Layer

The IN485DAI001A000 gateway implements a Modbus RTU (server) interface to be connected to an EIA-485 bus. It features an 8-N-2 communication (eight data bits, no parity, and two stop bits) with several available baud rates: **2400 -default-**, 4800, 9600, 19200, 38400, 57600, 76800, and 115200 bps. It also supports 8-N-1 communication (eight data bits, no parity, and one stop bit).

NOTE
AUTO-DETECT FUNCTION. The gateway will automatically detect the communication type (8-N-1 or 8-N-2) and set itself accordingly. No user action or manual settings are required.

8.2. Modbus Registers

IMPORTANT
The IN485DAI001A000 gateway has a polling limit of 50 registers. Therefore, it is not possible to poll more than 50 registers simultaneously, for example, if the same TX frame asks for the status of more than 50 registers.

NOTICE
The initialization value for all registers is 0x8000 (-32768).

NOTICE
When receiving an invalid value, registers behave differently depending on their function:

- Temperature-related registers are reset to the initialization value.
- The other registers retain their previous value.

8.2.1. Gateway Registers

Register name	Possible values	Modbus address (base 0)	PLC address (base 1)	R/W
Device Identifier	0x2900 (10496)	460	461	R
FW Version MSB[1]	Value in hexadecimal format	461	462	R
[1] It reports the first two numbers of the firmware version. Example: Version 1.2.3.4 will show C, which is the hexadecimal format corresponding to 12.				
FW Version LSB[2]	Value in hexadecimal format	462	463	R
[2] It reports the last two numbers of the firmware version. Example: Version 1.2.3.4 will show 22, which is the hexadecimal format corresponding to 34.				
Device Reset[3]	1	463	464	R/W
[3] Write a 1 in this register to reset the gateway.				
Baudrate	1: 2400bps 2: 4800bps 3: 9600bps 4: 19200bps 5: 38500bps 6: 57600bps 7: 76800bps 8: 115200bps	464	465	R
Modbus Slave Address	1..63	465	466	R
Dip-Switches Value[4]	Current DIP switches value	466	467	R
[4] It reports a decimal value that, converted to binary, shows each switch OFF (0) or ON (1) position for both SW1 and SW2.				

8.2.2. General Registers

Register name	Possible values	Modbus address (base 0)	PLC address (base 1)	R/W
Error: Code	0: No error Any other value: Error code	108	109	R
Error: Sub Code	0: No error Any other value: Error code	109	110	R
Operating Time Counter (h)[1]	0 .. 65535 (h)	116	117	R/W

[1] It reports the accumulated operating time of the heat pump in hours.

When reaching the maximum value (65535 h), this register is reset to 0.

IMPORTANT
This register requires one of the following extra-type registers to be enabled in order to operate:

- Compressor Operation (protocol address: 369; PLC address: 370)
- Pump Operation (protocol address: 371; PLC address: 372)

See Extra Registers (page 31) for more information on these two registers.

Remote Control Lock[2]	0: Unlocked (default value) 1: Locked	118	119	R/W

[2] It enables or disables the control of the Altherma 3 unit through its remote control.

If a value of **1** is written in this register, the Altherma 3 unit can only be controlled through the BMS, and any command sent through any remote control will have no effect.

Modbus Control Lock[3]	0: Unlocked (default value) 1: Locked	119	120	R/W

[3] It enables or disables the control of the Altherma 3 unit through the BMS.

If a value of **1** is written in this register, the Altherma 3 unit can only be controlled through its remote control, and any command sent from the BMS will have no effect.

TROUBLESHOOTING
If, for an unknown reason, the gateway does not work, ensure this register is set to **0**.

8.2.3. Zone Registers

Register name	Possible values	Modbus address (base 0)	PLC address (base 1)	R/W
Zones: On/Off	0: Off 1: On	140	141	R/W
Zones: Operation[1]	0: Not operating 1: Operating	141	142	R
[1] This register reports whether there is a demand for climate, and thus whether the climate system is operating.				
Zones: Mode[2]	0: Heat 1: Cool	142	143	R/W
[2] Use this register to set the mode for the climate.				

8.2.4. Main Zone Registers

Register name	Possible values	Modbus address (base 0)	PLC address (base 1)	R/W
Zone 1: Control Type[1]	0: Outlet Water Temperature 1: External Ambient Temperature 2: Room Thermostat Ambient Temperature	149	150	R
Zone 1: Setpoint Mode	0: Fixed 1: Weather Dependent	150	151	R/W
Zone 1: Setpoint Mode: Type	0: Weather-dependent heating, fixed cooling 1: Weather-dependent heating and cooling	151	152	R
Zone 1: Temperature: Setpoint[2]	Value in °C; °F; x1; x10	160	161	R/W
[2] This register is used to request a setpoint temperature from the Modbus BMS for the main zone.				

Register name	Possible values	Modbus address (base 0)	PLC address (base 1)	R/W
Zone 1: Temperature: Setpoint: Custom Lower Limit: Heat[3]	Value in °C; °F; x1; x10	161	162	R/W
Zone 1: Temperature: Setpoint: Custom Upper Limit: Heat[3]	Value in °C; °F; x1; x10	162	163	R/W
Zone 1: Temperature: Setpoint: Custom Lower Limit: Cool[3]	Value in °C; °F; x1; x10	163	164	R/W
Zone 1: Temperature: Setpoint: Custom Upper Limit: Cool[3]	Value in °C; °F; x1; x10	164	165	R/W
[3] With these registers, you can customize limits to establish a range of temperatures for both heat and cool modes. These limits cannot surpass the limits supported by the Altherma 3 unit. See the following four registers.				
Zone 1: Temperature: Setpoint: Unit Lower Limit: Heat[4]	Value in °C; °F; x1; x10	165	166	R
Zone 1: Temperature: Setpoint: Unit Upper Limit: Heat[4]	Value in °C; °F; x1; x10	166	167	R
Zone 1: Temperature: Setpoint: Unit Lower Limit: Cool[4]	Value in °C; °F; x1; x10	167	168	R
Zone 1: Temperature: Setpoint: Unit Upper Limit: Cool[4]	Value in °C; °F; x1; x10	168	169	R
[4] These registers report the maximum and minimum temperatures supported by the Altherma 3 unit for both heat and cool modes. These are absolute limits that cannot be surpassed by means of any other register.				
Zone 1: Temperature: Setpoint: Applied Lower Limit: Heat[5]	Value in °C; °F; x1; x10	169	170	R
Zone 1: Temperature: Setpoint: Applied Upper Limit: Heat[5]	Value in °C; °F; x1; x10	170	171	R
Zone 1: Temperature: Setpoint: Applied Lower Limit: Cool[5]	Value in °C; °F; x1; x10	171	172	R
Zone 1: Temperature: Setpoint: Applied Upper Limit: Cool[5]	Value in °C; °F; x1; x10	172	173	R
[5] These registers report the limits currently applied for both heat and cool modes.				
Zone 1: Scheduled Mode	0: Off 1: On	190	191	R/W

8.2.5. Room Registers

Register name	Possible values	Modbus address (base 0)	PLC address (base 1)	R/W
Room 1: Temperature: Setpoint[1]	Value in °C; °F; x1; x10	200	201	R/W
[1] This object is used to request a setpoint temperature from the Modbus BMS for the room.				
Room 1: Temperature: Setpoint: Custom Lower Limit: Heat[2]	Value in °C; °F; x1; x10	201	202	R/W
Room 1: Temperature: Setpoint: Custom Upper Limit: Heat[2]	Value in °C; °F; x1; x10	202	203	R/W
Room 1: Temperature: Setpoint: Custom Lower Limit: Cool[2]	Value in °C; °F; x1; x10	203	204	R/W
Room 1: Temperature: Setpoint: Custom Upper Limit: Cool[2]	Value in °C; °F; x1; x10	204	205	R/W
[2] With these registers, you can customize limits to establish a range of temperatures for both heat and cool modes. These limits cannot surpass the limits supported by the Altherma 3 unit. See the following four registers.				
Room 1: Temperature: Setpoint: Unit Lower Limit: Heat[3]	Value in °C; °F; x1; x10	205	206	R
Room 1: Temperature: Setpoint: Unit Upper Limit: Heat[3]	Value in °C; °F; x1; x10	206	207	R
Room 1: Temperature: Setpoint: Unit Lower Limit: Cool[3]	Value in °C; °F; x1; x10	207	208	R
Room 1: Temperature: Setpoint: Unit Upper Limit: Cool[3]	Value in °C; °F; x1; x10	208	209	R
[3] These registers report the maximum and minimum temperatures supported by the Altherma 3 unit for both heat and cool modes. These are absolute limits that cannot be surpassed by means of any other register.				
Room 1: Temperature: Setpoint: Applied Lower Limit: Heat[4]	Value in °C; °F; x1; x10	209	210	R
Room 1: Temperature: Setpoint: Applied Upper Limit: Heat[4]	Value in °C; °F; x1; x10	210	211	R
Room 1: Temperature: Setpoint: Applied Lower Limit: Cool[4]	Value in °C; °F; x1; x10	211	212	R
Room 1: Temperature: Setpoint: Applied Upper Limit: Cool[4]	Value in °C; °F; x1; x10	212	213	R
[4] These registers report the limits currently applied for both heat and cool modes.				
Room 1: Temperature: Modbus Room Thermostat Ambient Reference[5]	Value in °C; °F; x1; x10	214	215	R/W
[5] Use this register to write the ambient temperature provided by a thermistor installed in the Modbus system. Once a valid value is written in this register, the virtual temperature function is activated.				
Room 1: Antifrost Mode	0: Off 1: On	216	217	R
Room 1: Antifrost Room Setpoint Temperature: Heat	Value in °C; °F; x1; x10	217	218	R

8.2.6. Domestic Hot Water Registers

Register name	Possible values	Modbus address (base 0)	PLC address (base 1)	R/W
DHW: On/Off	0: Off 1: On	270	271	R/W
DHW: Operation[1]	0: Not Operating 1: Operating	271	272	R
[1] This register reports whether there is a demand for DHW, and thus whether the DHW system is operating.				
DHW: Setpoint Mode	0: Fixed 1: Weather Dependent	273	274	R/W
DHW: Temperature: Setpoint[2]	Value in °C; °F; x1; x10	276	277	R/W
[2] This object is used to request a setpoint temperature for the DHW from the Modbus BMS.				
DHW: Temperature: Setpoint: Custom Lower Limit[3]	Value in °C; °F; x1; x10	277	278	R/W
DHW: Temperature: Setpoint: Custom Upper Limit[3]	Value in °C; °F; x1; x10	278	279	R/W
[3] With these objects, you can customize limits to establish a range of temperatures for the DHW. These limits cannot surpass the limits supported by the water tank. See the following two objects.				
DHW: Temperature: Setpoint: Tank Lower Limit[4]	Value in °C; °F; x1; x10	279	280	R
DHW: Temperature: Setpoint: Tank Upper Limit[4]	Value in °C; °F; x1; x10	280	281	R
[4] These objects report the maximum and minimum temperatures supported by the water tank. These are absolute limits that cannot be surpassed by means of any other object.				
DHW: Temperature: Setpoint: Applied Lower Limit[5]	Value in °C; °F; x1; x10	281	282	R
DHW: Temperature: Setpoint: Applied Upper Limit[5]	Value in °C; °F; x1; x10	282	283	R
[5] These objects report the temperature limits currently applied for the DHW.				
DHW: Temperature: Tank Reference[6]	Value in °C; °F; x1; x10	285	286	R
[6] It reports the reference temperature for the DHW. This temperature is provided by the water tank thermistor(s).				
DHW: Scheduled Mode	0: Off 1: On	296	297	R
DHW: Powerful Operation[7]	0: Off 1: On	298	299	R/W
[7] It sets the DHW tank's built-in electric resistor on/off.				
DHW: Disinfection Mode[8]	0: Off 1: On	300	301	R
[8] It reports the Antilegionella cycle status (on/off).				

8.2.7. Outdoor Unit Temperature Registers

Register name	Possible values	Modbus address (base 0)	PLC address (base 1)	R/W
Temperature: A2W Unit Outdoor Ambient Reference[1]	Value in °C; °F; x1; x10	304	305	R
[1] It reports the ambient temperature provided by the outdoor unit.				
Temperature: Refrigerant Reference[2]	Value in °C; °F; x1; x10	305	306	R
[2] It reports the refrigerant temperature in the outdoor unit.				
Temperature: Outlet Water Reference	Value in °C; °F; x1; x10	306	307	R
[3] It reports the temperature of the water leaving the outdoor unit.				
Temperature: Outlet Water Reference (Plate Heat Exchanger)[4]	Value in °C; °F; x1; x10	307	308	R
[4] It reports the temperature of water entering the plate heat exchanger from the outdoor unit				
Temperature: Inlet Water Reference[5]	Value in °C; °F; x1; x10	308	309	R
[5] It reports the inlet backup heater water temp.				

8.2.8. Extra Registers

Register name	Possible values	Modbus address (base 0)	PLC address (base 1)	R/W
Quiet Mode (Low Noise Operation)[1]	0: Off 1: On	361	362	R
[1] It reports the Quiet Mode status (on/off).				
Compressor Operation[2]	0: Off 1: On	369	370	R
[2] It reports the compressor status (on/off).				
Compressor Operating Time[3]	0 .. 65535 (h)	370	371	R/W
[3] It reports the compressor's accumulated operating time in hours. Write a value of **0** to reset the counter. When reaching the maximum value (65535 h), this register is reset to 0.				
Pump Operation[4]	0: Off 1: On	371	372	R
[4] It reports the circulation pump status (on/off).				
Pump Operating Time[5]	0 .. 65535 (h)	372	373	R/W
[5] It reports the accumulated operating time of the circulation pump in hours. Write a value of **0** to reset the counter manually. When reaching the maximum value (65535 h), this register is reset to 0.				
Water Flow Rate[6]	0 .. 65535 (l/h)	373	374	R
[6] It reports the water flow rate provided by the flow sensor. When reaching the maximum value (65535 l/h), this register is reset to 0.				
Water Pressure: DHW[7]	Pa	374	375	R
[7] It reports the water pressure from the domestic hot water (DHW) tank in pascals.				

9. Virtual Temperature

The Virtual Temperature function is a mechanism designed to offset the difference between the current setpoint temperature used by the Altherma 3 unit and the actual room temperature in the living area.

To compensate for that difference, the IN485DAI001A000 gateway allows you to use the temperature obtained through third-party thermistors connected to the BACnet/Modbus BMS to establish the reference temperature for the Altherma 3 climate system.

REQUISITES TO USE THE VIRTUAL TEMPERATURE FUNCTION

- The Altherma 3 system includes at least one room.
- The living area where you intend to apply this function has a third-party thermistor connected to the Modbus/ BACnet BMS.

WHEN TO USE THE VIRTUAL TEMPERATURE FUNCTION

Use this function when there is a mismatch between the ambient temperature of the living area and the temperature delivered by the system.

IMPORTANT

Before using the Virtual Temperature function, you should check if the reason behind the mismatch is related to a system misconfiguration, such as an error in assigning remote controllers to the system's zones, and correct it.

The Virtual Temperature function is not a substitute for a properly configured Altherma 3system.

The Daikin Altherma 3 system incorporates advanced technology that offers multiple options for adjusting the system efficiently while maintaining comfort in living areas.

USAGE EXAMPLE

In the following image, the target temperature requested by the user is 23°C. However, the remote controller is placed at some distance from the heat emitter, and its thermistor is perceiving a temperature of 22°C. Additionally, the living area is even further away, and the actual temperature there is 20°C.

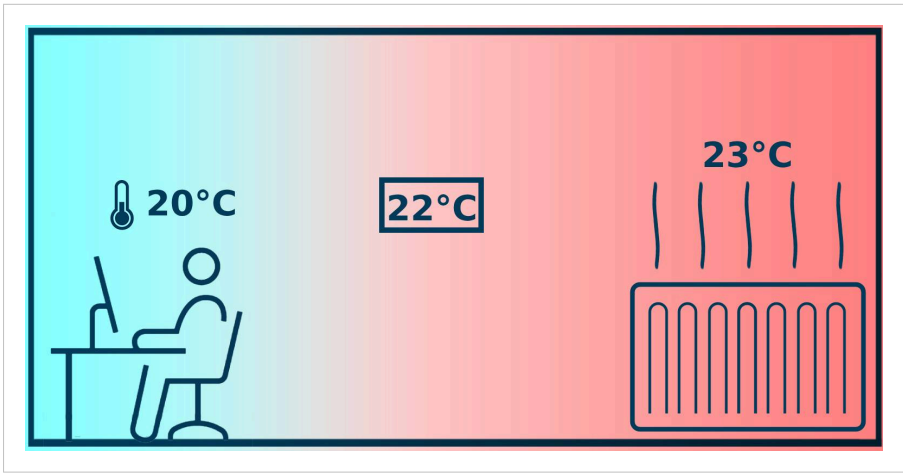

Given this case, you can place a third-party thermistor in the living area, connect it to the BACnet/Modbus BMS, and use the gateway's Virtual Temperature function to offset the difference between the temperature delivered by the system and the temperature perceived in the living area.

HOW THE VIRTUAL TEMPERATURE FUNCTION WORKS

When the Virtual Temperature function is active, the gateway is constantly applying the following formula:

$S_{AC} = T_{AC} – (T_{BMS} – S_{BMS})$

Where:

- S_{AC}: Recalculated temperature setpoint sent to the Altherma 3 system after the gateway applies the formula.
- T_{AC}: Altherma 3 system's reference temperature. This is the temperature perceived by the thermistor in the remote controller, which is used to report the room temperature.
- T_{BMS}: Ambient temperature reported by the thermistor placed in the living area and connected to the BMS side.
- S_{BMS}: Temperature setpoint requested from the BMS side for that zone. This is the target temperature that the user wants in the living area.

Given the case of the image, the values used by the Virtual Temperature function are as follows:

$S_{AC} = 22 - (20 - 23)$

When resolving the equation, we get the following result:

$S_{AC} = 22 - (-3)$

$S_{AC} = 22 + 3$

$S_{AC} = 25$

This means that the gateway is sending a setpoint temperature of 25°C, thereby achieving the desired temperature of 23°C that the user specified.

IMPORTANT
When the Virtual Temperature is active, the setpoint temperature reported by the Altherma 3 remote controller will differ from the actual temperature delivered by the system.

Once activated, the Virtual Temperature function recalculates the setpoint whenever any of these values change, either from the Altherma 3 system itself (through its remote control, for example) or from the BMS.

HOW TO ACTIVATE THE VIRTUAL TEMPERATURE FUNCTION

Follow this procedure:

1. From the BMS control interface, write the desired setpoint temperature using the dedicated signal.

BACnet	Modbus
Room1TempSetpoint_command	Room 1: Temperature: Setpoint (protocol address: 200; PLC address: 161)

2. Write the temperature value reported by the thermistor connected to the BMS using the dedicated signal.

BACnet	Modbus
Room1TempBACnetRoomThermAmbientRef_command[1]	Room 1: Temperature: Modbus Room Thermostat Ambient Reference[1] (protocol address: 214; PLC address: 215)
[1] When starting up the gateway, these signals will report a value of 0x8000 (-32768), meaning that the function is not activated.	

FOR BACNET

When starting up the gateway, the **Present_Value** property for the **Room1TempBACnetRoomThermAmbientRef_command** object is 0, and the **Reliability** property displays **UNRELIABLE_OTHER (7)**. This is the expected behavior, since no external temperature reference has been provided to the object yet. However, after receiving a valid value, the **Reliability** property changes to **NO_FAULT_DETECTED (0)**. After that, any value can be used in the temperature range, including 0.

IMPORTANT

Once these signals receive valid values, the Virtual Temperature function will activate

HOW TO DEACTIVATE THE VIRTUAL TEMPERATURE FUNCTION

Write a value of 0x8000 (-32768) in the dedicated signal (see [1] above).

10. Error Codes

10.1. Gateway Error Codes

NOTE
These error codes are related to the gateway and will not appear in the main user interface of the Altherma 3.

Error Code	Error Subcode	Error Description
0	-	No active error
-1	-	Communication error between the Daikin Altherma 3 unit and the gateway

10.2. Daikin Altherma 3 Error Codes

Table 5. Outdoor unit error codes:

Error Subcode	Daikin Error code	Error Description
5376	A5-00	High pressure cooling/Peak Cut/freeze protection problem
9472	C5-00	Heat exchanger thermistor abnormality
12544	E1-00	PCB defect
12800	E2-00	Leakage current detection error
13056	E3-00	Actuation of high pressure switch (HPS)
13152	E3-24	High pressure sensor abnormality
13312	E4-00	Abnormal suction pressure
13568	E5-00	Overheat of inverter compressor motor.
13824	E6-00	Compressor startup defect
14080	E7-00	Malfunction of outdoor unit fan motor
14336	E8-00	Power input overvoltage
14592	E9-00	Malfunction of electronic expansion valve
14848	EA-00	Cool/heat switchover problem
21248	F3-00	Malfunction of discharge pipe temperature
22016	F6-00	Abnormal high pressure in cooling
23040	FA-00	Abnormal high pressure, actuation of HPS
16384	H0-00	Voltage/current sensor problem
16640	H1-00	External temperature sensor problem
17152	H3-00	Malfunction of high pressure switch HPS)
17408	H4-00	Malfunction of low pressure switch
17664	H5-00	Malfunction of compressor overload protection
17920	H6-00	Malfunction of position detection sensor
18432	H8-00	Malfunction of compressor input (CT) system
18688	H9-00	Malfunction of outdoor air thermistor

Error Subcode	Daikin Error code	Error Description
25344	J3-00	Malfunction of discharge pipe thermistor
25384	J3-10	Compressor port thermistor abnormality
25856	J5-00	Malfunction of suction pipe thermistor
26112	J6-00	Malfunction of heat exchanger thermistor
26140	J6-07	Malfunction of heat exchanger thermistor
26240	J6-32	Leaving water temperature thermistor abnormality
26624	J8-00	Malfunction of refrigerant liquid thermistor
27136	JA-00	Malfunction of high pressure sensor
27204	JA-17	Refrigerant pressure sensor abnormality
27648	JC-00	Low pressure sensor abnormality
27652	JC-01	Evaporator pressure abnormality
28928	L1-00	Malfunction of INV PCB
29440	L3-00	Electrical box temperature rise problem
29696	L4-00	Malfunction of inverter radiating fin temperature rise
29952	L5-00	Inverter instantaneous overcurrent (DC)
30720	L8-00	Malfunction triggered by a thermal protection in the inverter PCB
30976	L9-00	Prevention of compressor lock
31744	LC-00	Malfunction in communication system of outdoor unit
33024	P1-00	Open-phase power supply imbalance
33536	P3-00	Abnormal direct current
33792	P4-00	Malfunction of radiating fin temperature sensor
36096	PJ-00	Capacity setting mismatch
36864	U0-00	Shortage of refrigerant
37120	U1-00	Malfunction of reverse phase/open-phase
37376	U2-00	Defect of power supply voltage
38656	U7-00	Transmission malfunction between main CPU-INV CPU
40704	UF-00	Reversed piping or bad communication wiring detection

Table 6. Indoor unit error codes:

Error Subcode	Daikin Error code	Error Description
51972	7H-01	Water flow problem
51984	7H-04	Water flow problem during domestic hot water production
51988	7H-05	Water flow problem during heating/sampling
51992	7H-06	Water flow problem during cooling/defrosting
51996	7H-07	Water flow problem. Pump deblocking active
52000	7H-08	Pump abnormality during operation (pump feedback)
45056	80-00	Returning water temperature sensor problem
45312	81-00	Leaving water temperature sensor problem
45316	81-01	Mixed water thermistor abnormality

Error Subcode	Daikin Error code	Error Description
45328	81-04	Leaving water temperature sensor not properly mounted
45336	81-06	Entering water temperature thermistor abnormality (indoor unit)
45340	81-07	Mixed leaving water temperature after the tank thermistor abnormality (DLWA2)
47364	89-01	Heat exchanger freeze-up protection activated during defrost (error)
47368	89-02	Heat exchanger freeze-up protection activated during heating/DHW operation (warning)
47372	89-03	Heat exchanger freeze-up protection activated during defrost (warning)
47380	89-05	Heat exchanger freeze-up protection activated during cooling operation (error)
47384	89-06	Heat exchanger freeze-up protection activated during cooling operation (warning)
48896	8F-00	Abnormal increase outlet water temperature (DHW)
47872	8H-00	Abnormal increase outlet water temperature
47876	8H-01	Overheating mixed water circuit
47880	8H-02	Overheating mixed water circuit (thermostat)
47884	8H-03	Overheating water circuit (thermostat)
47904	8H-08	Overheating water circuit
4352	A1-00	Zero cross detection problem
6660	AA-01	Backup heater overheated
6664	AA-02	External backup heater overheated
7168	AC-00	Booster heater overheated
6912	AH-00	Tank disinfection function not completed correctly
7436	AJ-03	Too long DHW heat-up time required
8192	C0-00	Water flow detected while pump is OFF
8196	C0-01	Flow switch malfunction
8200	C0-02	Flow switch malfunction
8488	C1-10	ACS communication malfunction
8492	C1-11	ACS communication malfunction
9216	C4-00	Heat exchanger temperature sensor problem
10244	C8-01	Current sensor abnormality
11528	CJ-02	Room temperature sensor problem
14332	E7-63	Brine pump error
15620	EJ-01	Brine circuit pressure low
15360	EC-00	Abnormal increase tank temperature
15376	EC-04	Tank preheating
19456	HC-00	Tank temperature sensor problem
19460	HC-01	Second tank temperature sensor problem
19492	HC-09	Tank temperature sensor problem
19752	HJ-10	Water pressure sensor abnormality

Error Subcode	Daikin Error code	Error Description
19760	HJ-12	Bypass valve turning error
26244	J6-33	Sensor communication error
26416	J7-12	Brine inlet thermistor abnormality
26652	J8-07	Brine outlet thermistor abnormality
37632	U3-00	Underfloor heating screed dryout function not completed correctly
37888	U4-00	Indoor/outdoor unit communication problem
38144	U5-00	User interface communication problem
38552	U6-38	Extension/hydro communication problem
38916	U8-01	Connection with LAN adapter lost
38920	U8-02	Connection with room thermostat lost
38924	U8-03	No connection with room thermostat
38928	U8-04	Unknown USB device
38932	U8-05	File malfunction
38936	U8-06	MMI/bizone kit communication problem
38940	U8-07	P1P2 communication error
38948	U8-09	MMI software version {version_MMI_software} / indoor unit[Version_IU_modelname] compatibility error
38956	U8-11	Connection with the Wireless gateway lost
39424	UA-00	Indoor unit, outdoor unit matching problem
39492	UA-17	Tank Type problem
39508	UA-21	Extension/hydro mismatch problem
39512	UA-22	Communication problem between control box and option box
39660	UA-59	HPSU/Hydro combination abnormality

NOTE
Some of these error codes only apply to certain Daikin Altherma 3 models. For more information, refer to the documentation for your Daikin Altherma 3 model.

NOTE
If you detect a non-listed error code, please contact Daikin technical support.