ENGLISH

IN485DAI001I000 GATEWAY

Daikin Residential Systems to BACnet MS/TP

USER MANUAL
Version 1.0.9
Publication date 2025-11-07

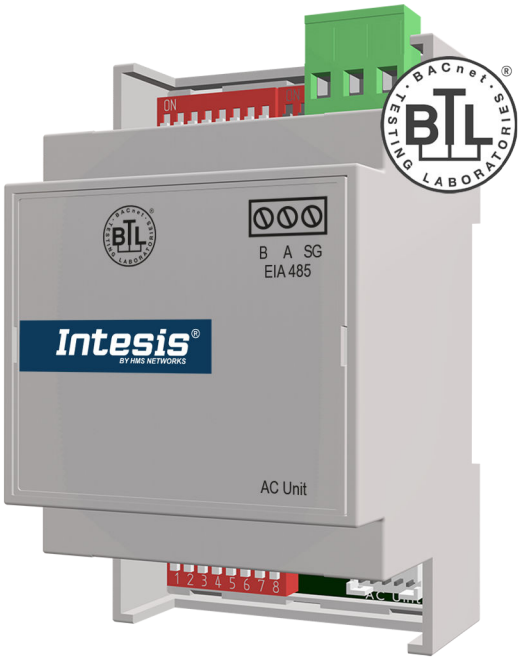

14 rue Edouard Petit
42000 St-Etienne
Tel : +33 477 92 03 56
Email : contact@rg2i.com
www.rg2i.com

Copyright © 2025 Intesis

Disclaimer

The information in this document is for informational purposes only. Please inform HMS Networks of any inaccuracies or omissions found in this document. HMS Networks disclaims any responsibility or liability for any errors that may appear in this document.

HMS Networks reserves the right to modify its products in line with its policy of continuous product development. The information in this document shall therefore not be construed as a commitment on the part of HMS Networks and is subject to change without notice. HMS Networks makes no commitment to update or keep current the information in this document.

The data, examples and illustrations found in this document are included for illustrative purposes and are only intended to help improve understanding of the functionality and handling of the product. In view of the wide range of possible applications of the product, and because of the many variables and requirements associated with any particular implementation, HMS Networks cannot assume responsibility or liability for actual use based on the data, examples or illustrations included in this document nor for any damages incurred during installation of the product. Those responsible for the use of the product must acquire sufficient knowledge in order to ensure that the product is used correctly in their specific application and that the application meets all performance and safety requirements including any applicable laws, regulations, codes and standards. Further, HMS Networks will under no circumstances assume liability or responsibility for any problems that may arise as a result from the use of undocumented features or functional side effects found outside the documented scope of the product. The effects caused by any direct or indirect use of such aspects of the product are undefined and may include e.g. compatibility issues and stability issues.

Table of Contents

1. Description, Compatible AC systems, and Order Codes 1

2. General Information 2

2.1. Intended Use of the User Manual 2
2.2. General Safety Information 2
2.3. Admonition Messages and Symbols 3

3. Quickstart Guide for the IN485DAI001I000 Gateway 4

4. Overview 5

4.1. Inside the Package 5
4.2. Main Features 5
4.3. Gateway Capacity 6
4.4. General Functionality 6

5. Hardware 7

5.1. Mounting 7
5.2. Connection Procedure 9
5.3. DIP switches 11
5.4. LED Indicators 13
5.5. Technical Specifications 14
5.6. Dimensions 14

6. Restore the Factory Settings 15

7. BACnet Specifications 16

7.1. Objects 16
7.1.1. Supported Object Types 16
7.1.2. Member Objects 16
7.1.2.1. Type: Gateway 16
7.1.2.2. Type: Indoor Unit 16
7.1.3. Objects and Properties 17
7.1.3.1. Daikin AC Gateway (Device Object Type) 17
7.1.3.2. OnOff_status (Binary Input Object Type) 19
7.1.3.3. OnOff_command (Binary Output Object Type) 20
7.1.3.4. Mode_status (Multistate Input Object Type) 21
7.1.3.5. Mode_command (Multistate Output Object Type) 22
7.1.3.6. VirtualTempActive (Binary Input Object Type) 23
7.1.3.7. Setpoint_status (Analog Input Object Type) 24
7.1.3.8. Setpoint_command (Analog Output Object Type) 25
7.1.3.9. UserSetpoint_status (Analog Input Object Type) 26
7.1.3.10. RoomTemperature_status (Analog Input Object Type) 27
7.1.3.11. RoomTemperature_command (Analog Output Object Type) 28
7.1.3.12. FanSpeed_status (Multistate Input Object Type) 29
7.1.3.13. FanSpeed_command (Multistate Output Object Type) 30
7.1.3.14. AirDirectionUD_status (Multistate Input Object Type) 31
7.1.3.15. AirDirectionUD_command (Multistate Output Object Type) 32
7.1.3.16. AirDirectionLR_status (Multistate Input Object Type) 33
7.1.3.17. AirDirectionLR_command (Multistate Output Object Type) 34
7.1.3.18. ErrorCode (Analog Input Object Type) 35
7.1.3.19. ErrorCodeM (Multistate Input Object Type) 36
7.1.3.20. ErrorActive (Binary Input Object Type) 38
7.1.3.21. OnTimeCounter (Analog Value Object Type) 39

7.1.3.22. Occupancy (Multistate Value Object Type) 40
7.1.3.23. OccupiedCoolSetPoint (Analog Value Object Type) 41
7.1.3.24. OccupiedHeatSetPoint (Analog Value Object Type) 42
7.1.3.25. UnoccupiedCoolSetPoint (Analog Value Object Type) 43
7.1.3.26. UnoccupiedHeatSetPoint (Analog Value Object Type) 44
7.1.3.27. OccupancyContinuousCheck (Binary Value Object Type) 45
7.1.3.28. UnoccupiedDeadbandAction (Binary Value Object Type) 46
7.1.3.29. LockRemoteControl (Binary Value Object Type) 47
7.1.3.30. Humidification_status (Multistate Input Object Type) 48
7.1.3.31. Humidification_command (Multistate Output Object Type) 49
7.1.3.32. OutdoorTemp_status (Analog Input Object Type) 50
7.1.3.33. DIP_SW_S1_status (Analog Input Object Type) 51
7.1.3.34. DIP_SW_S2_status (Analog Input Object Type) 52
7.1.3.35. SerialNumber (Analog Input Object Type) 53

8. Occupancy Function 54

9. Virtual Temperature Function 56
9.1. Considerations on Temperature Signals 57

10. Error Codes 60
10.1. Gateway Codes 60
10.2. AC System Codes 60

1. Description, Compatible AC systems, and Order Codes

BACnet MS/TP gateway for Daikin air conditioners.

Compatible with residential air conditioning systems commercialized by Daikin.

Use the compatibility tool to get a complete list of compatible units: https://compatibility.intesis.com/

ORDER CODE	LEGACY ORDER CODE
IN485DAI001I000	INBACDAI001I100

2. General Information

2.1. Intended Use of the User Manual

This manual contains the main features of this Intesis gateway and the instructions for its appropriate installation, configuration, and operation.

Any person who installs, configures, or operates this gateway or any associated equipment should be aware of this manual's contents.

Keep this manual for future reference during the installation, configuration, and operation.

2.2. General Safety Information

IMPORTANT
Follow these instructions carefully. Improper work may seriously harm your health and damage the gateway and/or any other equipment connected to it.

Only technical personnel, following these instructions and the country legislation for installing electrical equipment, can install and manipulate this gateway.

Install this gateway indoors, in a restricted access location, avoiding exposure to direct solar radiation, water, high relative humidity, or dust.

Preferably, mount this gateway on a DIN rail inside a grounded metallic cabinet, following the instructions in this manual.

If mounting on a wall, firmly fix this gateway on a non-vibrating surface, following the instructions in this manual.

Connect this gateway only to networks without routing to the outside plant.

All communication ports are considered for indoor use and must only be connected to SELV circuits.

Disconnect all systems from power before manipulating and connecting them to the gateway.

Respect the expected polarity of power and communication cables when connecting them to the gateway.

This Intesis gateway is designed for installation in an enclosure. When the device is mounted outside an enclosure, precautions should be taken to avoid electrostatic discharges to the unit in environments with static levels above 4 kV. When working in an enclosure (e.g., making adjustments, setting switches, etc.), typical anti-static precautions should be observed before touching the unit.

Safety instructions in other languages can be found here.

2.3. Admonition Messages and Symbols

CAUTION
Instruction that must be followed to avoid a potentially hazardous situation that, if not avoided, could result in minor or moderate injury.

IMPORTANT
Instruction that must be followed to avoid a risk of reduced functionality and/or damage to the equipment or to avoid a network security risk.

NOTE
Additional information which may facilitate installation and/or operation.

TIP
Helpful advice and suggestions.

NOTICE
Remarkable Information.

3. Quickstart Guide for the IN485DAI001I000 Gateway

CAUTION
Disconnect all systems from power before connecting them to the gateway.

1. Mount the gateway in the desired installation site. This gateway can be mounted over a DIN rail or a wall. See details in Mounting (page 7).

   NOTE
   DIN rail mounting inside a grounded cabinet or metal enclosure is recommended.

2. Configure the gateway using the built-in DIP switches. See details in DIP switches (page 11).
3. Connect the gateway to the BACnet network via its **EIA-485** port.
4. Connect the gateway to the indoor unit using the supplied AC connection cable. See details in Connection Procedure (page 9).
5. Check the communication performance between the BACnet bus and the AC system through the gateway's LED indicators. See details in LED Indicators (page 13).
6. The Intesis gateway is ready to be used in your system.

4. Overview

Figure 1. Integration of Daikin AC units into a BACnet MS/TP installation using the Intesis IN485DAI001I000 gateway.

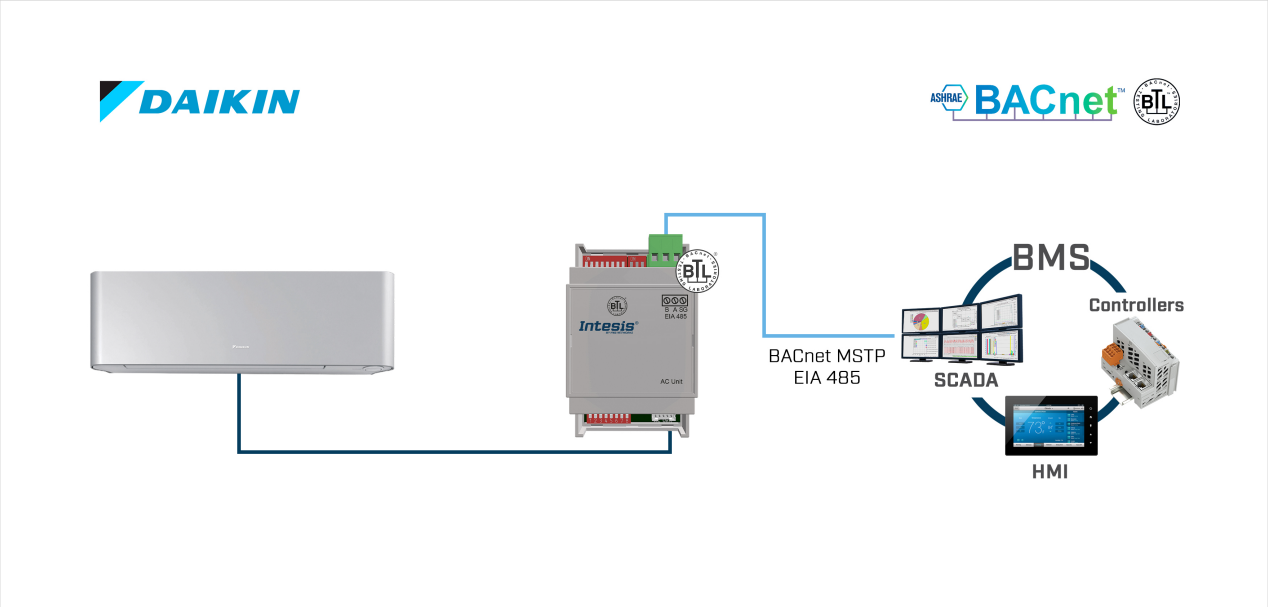

NOTE
This document assumes the user is familiar with BACnet and Daikin technologies, including their associated technical terminology.

4.1. Inside the Package

Items included:

- Intesis IN485DAI001I000 gateway
- Installation Guide
- AC unit connection cable

4.2. Main Features

- BTL mark ensures full interoperability with BACnet devices.
- Configuration with onboard DIP switches.
- Quick and easy installation: Set the DIP switches, plug, and play.
- External power supply not required.
- Simultaneous control of the AC unit via both the remote controller and the BMS (BACnet MS/TP).
- Reduced dimensions (HxWxD): 93 x 53 x 58 mm / 3.7 x 2.1 x 2.3”.
- Mountable on DIN rail, wall, or even inside the indoor unit in some models of AC.
- Significant reduction of the HVAC system energy consumption.
- Three-year warranty.

4.3. Gateway Capacity

This Intesis gateway can integrate one single Daikin AC indoor unit and its associated elements.

4.4. General Functionality

With this Intesis IN485DAI001I000 gateway, you can easily integrate Daikin domestic air conditioning systems into a system based on BACnet MS/TP. To do so, the gateway acts as a server device of the installation itself, accessing all signals from the AC indoor unit.

The gateway is continuously polling the AC unit, storing in its memory the current status of every signal you want to track and serving this data to the control system when requested. The gateway also sends the requested commands to the indoor unit.

5. Hardware

5.1. Mounting

Mount the gateway over a DIN rail or over a wall.

IMPORTANT
Leave enough clear space to wire the gateway easily and for the subsequent manipulation of elements such as connectors, DIP switches, etc.

IMPORTANT
Do not mount the gateway in air-handling units or conducts.

NOTE
DIN rail mounting inside a grounded metallic cabinet is recommended.

DIN rail mounting

Keep the clips in their original position.

1. Fit the gateway's top-side clip in the upper edge of the DIN rail.
2. Press the low side of the gateway gently to lock it in the DIN rail.
3. Make sure the gateway is firmly fixed.

NOTE
For some DIN rails, to complete step 2, you may need a small screwdriver or similar to pull the bottom clip down.

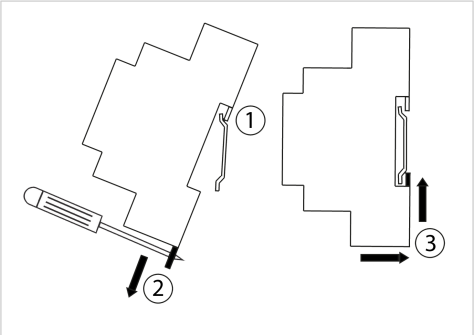

Wall mounting

IMPORTANT
For reasons of security, the maximum height for wall mounting is two meters (6.5 feet).

1. Press the rear panel clips outwards until you hear a *click*.
2. Use the clip holes to screw the gateway to the wall.

   NOTE
   Use M3 screws, 25 mm (1") length.

3. Make sure the gateway is firmly fixed.

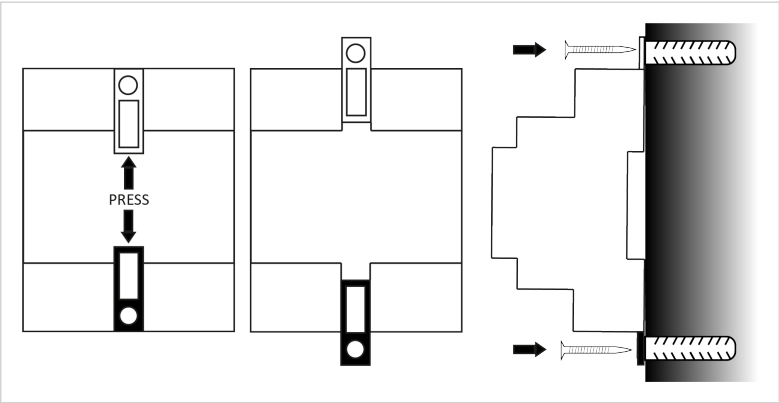

5.2. Connection Procedure

CAUTION
Disconnect all systems from power before connecting them to the gateway.

IMPORTANT
Keep communication cables as far away as possible from power and ground cables. Never bundle them together.

NOTE
Mount the gateway in the desired place before wiring it.

Figure 2. Wiring diagram

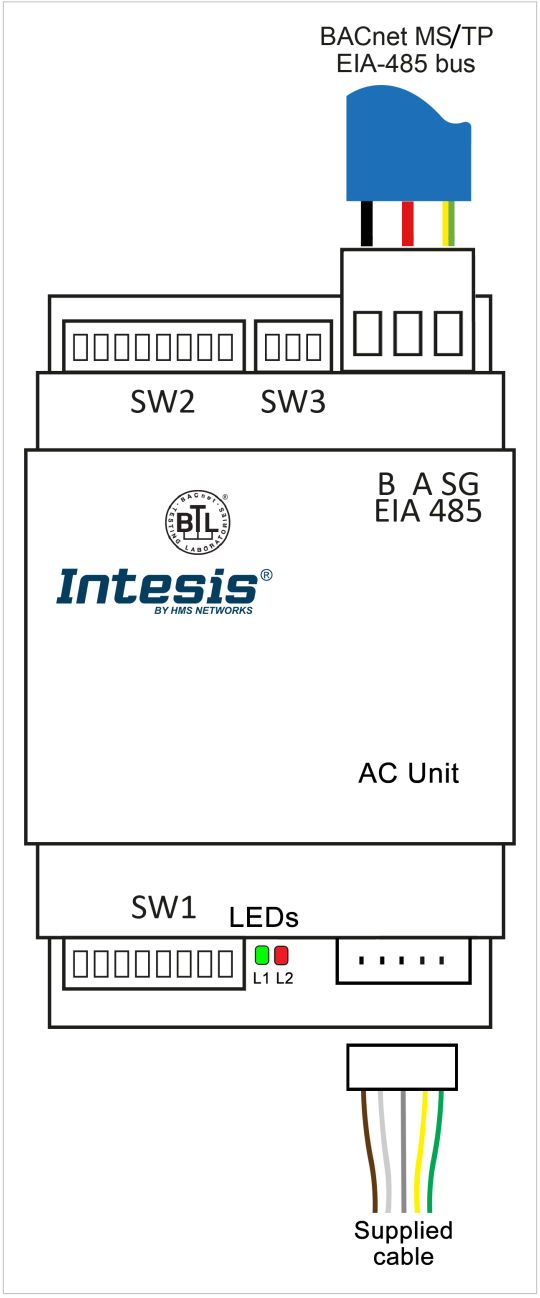

Connecting the gateway to the AC indoor unit

1. Use the supplied cable to connect the AC indoor unit and the gateway:

   IMPORTANT
   This cable is 1.50 m (4.9 feet) long. Its modification in length may affect the correct operation of the gateway.

   a. **AC indoor unit connection:** Plug the end connector, the one on the longest unsheathed part of the cable, into the socket S21 of the AC indoor unit control board.

   b. **Gateway connection:** Plug the other end connector, the one on the shortest unsheathed part of the cable, into the gateway's socket labeled as **AC Unit**.

Connecting the gateway to the BACnet MS/TP bus

2. Connect the BACnet MS/TP bus to the EIA-485 port of the gateway.

   IMPORTANT
   Observe polarity: B-, A+, and SG for signal ground.

   IMPORTANT
   - EIA-485 bus doesn't allow loop or star topologies.
   - Maximum length for the EIA-485 bus is 1200 meters (4000 feet).

   EIA-485 BUS TERMINATION AND FAIL-SAFE BIASING
   The EIA-485 bus requires a 120 Ω termination resistor at each end to avoid signal reflections.

   When all transmitters are in high impedance (three-state), a fail-safe biasing mechanism is needed to maintain a valid voltage level and avoid false fail status detections.

   Some EIA-485 Master devices may also include internal termination and/or fail-safe biasing. Always check the Master device’s documentation.

   If the gateway is installed at one end of the bus and termination is enabled, do not add another resistor at that end.

   To know more, refer to the document Polarity Issues in RS485 Networks.

3. Reconnect all systems to power.

5.3. DIP switches

The gateway includes three DIP switches: SW1 (8 switches) at the bottom and SW2 (8 switches) and SW3 (3 switches) at the top.

IMPORTANT
The DIP switches configuration will only take effect after rebooting the gateway.

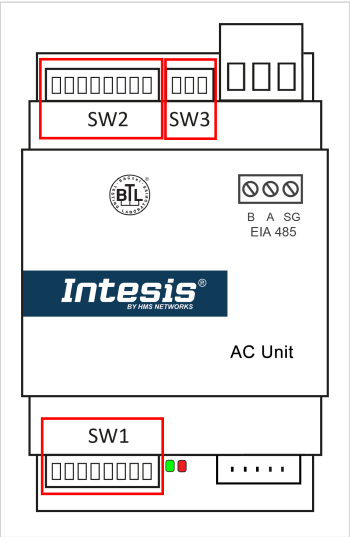

Table 1. SW1 (P6 to P8): BACnet MS/TP baud rate

Switches								Description
1	2	3	4	5	6	7	8	
X	X	X	X	X	OFF	OFF	OFF	Autobaudrate (default value)
X	X	X	X	X	ON	OFF	OFF	9600 bps
X	X	X	X	X	OFF	ON	OFF	19200 bps
X	X	X	X	X	ON	ON	OFF	38400 bps
X	X	X	X	X	OFF	OFF	ON	57600 bps
X	X	X	X	X	ON	OFF	ON	76800 bps
X	X	X	X	X	OFF	ON	ON	115200 bps
X	X	X	X	X	ON	ON	ON	Autobaudrate

NOTE
If **Autobaudrate** is selected, the gateway will scan the network to find any other BACnet MS/TP device with a fixed baud rate and will match its baud rate. Once detected, the baud rate will only be modified after a reset/reboot of the gateway.

Table 2. SW2 (P1 to P7): BACnet MS/TP MAC address; (P8): Temperature unit (°C/°F)

Switches								MAC address	Description
1	2	3	4	5	6	7	8		
OFF	OFF	OFF	OFF	OFF	OFF	OFF	X	0	-
ON	OFF	OFF	OFF	OFF	OFF	OFF	X	1	-
OFF	ON	OFF	OFF	OFF	OFF	OFF	X	2	-
ON	ON	OFF	OFF	OFF	OFF	OFF	X	3	-
...							...	...	-
ON	OFF	ON	ON	ON	ON	ON	X	125	-
OFF	ON	ON	ON	ON	ON	ON	X	126	-
ON	ON	ON	ON	ON	ON	ON	X	127	-
X	X	X	X	X	X	X	OFF	-	Temperature values in BACnet are represented in Celsius degrees (default value)
X	X	X	X	X	X	X	ON	-	Temperature values in BACnet are represented in Fahrenheit degrees

NOTE

By default, the **Device instance** base is 246000. Setting the SW2 switches, you can add from 0 to 127, so the final Device instance address can be from 246000 to 246127.

IMPORTANT

If you overwrite the **Device instance** object from the BMS side (for example, using the control terminal), this function to set up the **Device instance** with the SW2 switches will be deactivated. To activate this function again, a factory reset is needed.

Table 3. SW3 (P1 to P3): BACnet polarization and termination resistor

Switches			Description
1	2	3	
OFF	X	X	EIA-485 bus without termination resistor. The gateway is not at one end of the EIA-485 bus (default value)
ON	X	X	120 Ω termination resistor active. The gateway is at one end of the EIA-485 bus
X	OFF	OFF	No bus polarization (default value)
X	ON	ON	Bus polarization active

5.4. LED Indicators

There are two LEDs at the lower side of the gateway, between the DIP switch block SW1 and the **AC Unit** connector.

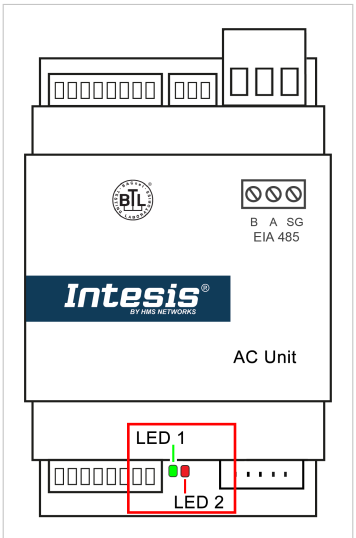

When powering the gateway on, both LEDs blink once and then turn off. After that, LEDs will behave as described in the table below:

Table 4. LED status table

LED	Status	Description
L1 Green BACnet	ON	BACnet MS/TP link performed
	Flickering	Activity on the BACnet MS/TP bus
	OFF	BACnet MS/TP link not performed
L2 Red AC unit	ON	AC communication error
	Blinking	AC unit error
	Flashing	AC communication OK

LED PATTERNS

- **ON**: 100% on
- **Flickering**: irregular cycle (90% on - 10% off approx)
- **Blinking**: 50% on - 50% off
- **Flashing**: 10% on - 90% off
- **OFF**: 100% off

5.5. Technical Specifications

Housing	Plastic, type PC (UL 94 V-0) Net dimensions (HxWxD): 93 x 53 x 58 mm / 3.7 x 2.1 x 2.3” Color: Light grey. RAL 7035 Protection: IP20
Net weight	85 g (3 oz)
Terminal wiring	Wire cross-section/gauge per terminal: One core: 0.2 .. 2.5 mm^2 (24 .. 11 AWG) Two cores: 0.2 .. 1.5mm^2 (24 .. 15 AWG) Three cores: Not permitted Use solid or stranded wires (twisted or with ferrule).
Mounting	Wall, DIN rail, or inside the indoor unit
EIA-485 port **BACnet MS/TP**	1 x pluggable terminal block (3 poles: B, A, and SG)
AC unit port	1 x Specific socket
LED indicators	2 x Communication status
DIP switches	SW1: Control system selection and baud rate configuration SW1: Baud rate configuration SW2: MAC address and temperature unit SW3: Bus polarization and termination
Operational temperature	0 to +70°C / 32 to 158°F
Storage temperature	-20 to 85°C / -4 to 185°F
Operational and storage humidity	5% to 95% RH non-condensing
Isolation between comm. ports	1000 VDC

5.6. Dimensions

Net dimensions (HxWxD):
Millimeters: 93 x 53 x 58 mm
Inches: 3.66 x 2.08 x 2.28"

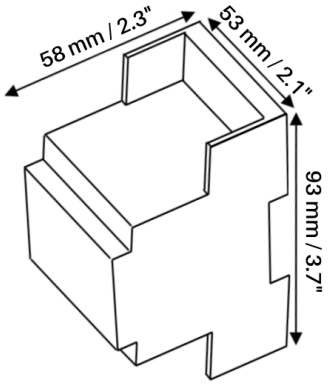

IMPORTANT
Leave enough clear space to wire the gateway easily and for the subsequent manipulation of elements such as connectors, DIP switches, etc.

6. Restore the Factory Settings

To restore the gateway to its factory settings, proceed as follows:

1. Set all switches from DIP switches SW1 and SW2 to **ON**.
2. Reboot the gateway:
   a. Power it OFF.
   b. Power it ON.

   NOTE
   To power the gateway OFF, disconnect it from the AC unit and from the power supply, if there is one. To power the gateway ON, reestablish those connections.

3. After the reboot, LEDs will blink with the SOS Morse sequence:
   a. Three short blinks
   b. Three longer blinks
   c. Three short blinks
4. Set all switches from DIP switches SW1 and SW2 to **OFF** within 30 seconds.

   IMPORTANT
   If you take longer than 30 seconds, all LEDs will turn off, meaning that the procedure has failed. To retry it, go to step 1 and begin the procedure again.

After this procedure, the LED will flash red, meaning that the gateway has been restored to the factory settings.

7. BACnet Specifications

7.1. Objects

7.1.1. Supported Object Types

Object type	ID
Analog-Input	0
Analog-Output	1
Analog-Value	2
Binary-Input	3
Binary-Output	4
Binary-Value	5
Device	8
Multistate-Input	13
Multistate-Output	14
Multistate-Value	19

7.1.2. Member Objects

7.1.2.1. Type: Gateway

Object name	Description	Object type	Object instance
IN485DAI001I000	Daikin AC gateway	8: Device	246000 (default)

7.1.2.2. Type: Indoor Unit

Object name	Object type	Object instance
OnOff_status	BI	0
OnOff_command	BO	0
Mode_status	MI	0
Mode_command	MO	0
Setpoint_status	AI	0
UserSetpoint_status	AI	17
Setpoint_command	AO	0
VirtualTempActive	BI	14
FanSpeed_status	MI	1
FanSpeed_command	MO	1
AirDirectionUD_status	MI	2
AirDirectionUD_command	MO	2
AirDirectionLR_status	MI	3
AirDirectionLR_command	MO	3
RoomTemperature_status	AI	1
RoomTemperature_command	AO	1
ErrorCode	AI	2
ErrorCodeM	MI	4
ErrorActive	BI	1
OnTimeCounter	AV	0
Occupancy	MV	0

Object name	Object type	Object instance
OccupiedCoolSetpoint	AV	1
OccupiedHeatSetpoint	AV	2
UnoccupiedCoolSetpoint	AV	3
UnoccupiedHeatSetpoint	AV	4
OccupancyContinuousCheck	BV	0
UnoccupiedDeadBandAction	BV	1
LockRemoteControl	BV	2
Humidification_status	MI	8
Humidification_command	MO	6
OutdoorTemp_status	AI	8
DIP_SW_S1_status	AI	9
DIP_SW_S2_status	AI	10
SerialNumber	AI	11

7.1.3. Objects and Properties

7.1.3.1. Daikin AC Gateway (Device Object Type)

Object_Identifier: The gateway can be identified in the BACnet network automatically or manually:

- **Automatic addressing (default):** This mode uses a base address of 246000 + the MAC address number selected in the DIP switch SW2.
- **Manual addressing:** The gateway switches to this mode when this property receives a value from the BACnet side.

IMPORTANT
During the manual addressing mode, the gateway will not consider the MAC address configured with the DIP switch SW2.

IMPORTANT
If the **Object_Identifier** is overwritten from the BACnet side, the DIP switch SW2 configuration will not be considered for the Device instance calculation until the gateway is reset to the factory settings. See Restore the Factory Settings (page 15).

Object_name: In the **Device Object**, is configurable writing directly on this property.

Description: In the **Device Object**, is configurable writing directly on the property. Max. length: 63 characters.

Property Identifier	Property Datatype	Value	ASHRAE	Gateway
Object_Identifier	BACnetObjectIdentifier	Device, 246000 (default value)	R	W
Object_Name	CharacterString	IN485DAI001I000	R	W
Object_Type	BACnetObjectType	DEVICE (8) (Device Object Type)	R	R
System_Status	BACnetDeviceStatus	OPERATIONAL (0)	R	R
Vendor_Name	CharacterString	HMS Industrial Networks SLU	R	R
Vendor_Identifier	Unsigned16	246	R	R
Model_Name	CharacterString	IN485DAI001I000	R	R
Firmware_Revision	CharacterString	1.0.0.0	R	R
Application_Software_Version	CharacterString	1.0.0.0	R	R
Location	CharacterString	""	O	-
Description	CharacterString	Daikin AC interface	O	W
Protocol_Version	Unsigned	1	R	R

Property Identifier	Property Datatype	Value	ASHRAE	Gateway
Protocol_Revision	Unsigned	12	R	R
Protocol_Services_Supported	BACnetServiceSupported	-	R	R
Protocol_Object_Types_Supported	BACnetObjectTypes Supported	Refer to section Supported Object Types (page 16)	R	R
Object_List	BACnetArray[N] of BACnetObjectIdentifier	BACnetARRAY[N]	R	R
Structured_Object_List	BACnetArray[N] of BACnetObjectIdentifier	-	O	-
Max_APDU_Length_Accepted	Unsigned	480	R	R
Segmentation_Supported	BACnetSegmentation	SEGMENTED-BOTH (0)	R	R
Max_Segments_accepted	Unsigned	16	O	R
VT_Classes_Supported	List of BACnetVTClass	-	O	-
Active_VT_Sessions	List of BACnetVTSession	-	O	-
Local_Date	Date	-	O	-
Local_Time	Time	-	O	-
UTC_Offset	INTEGER	-	O	-
Daylight_Savings_Status	BOOLEAN	-	O	-
APDU_Segment_Timeout	Unsigned	3000	R	R
APDU_Timeout	Unsigned	3000	R	R
Number_of_APDU_Retries	Unsigned	3	R	R
List_Of_Session_Keys	List of BACnetSessionKey	-	O	-
Time_Synchronization_Recipients	List of BACnetRecipient	-	O	-
Max_Master	Unsigned	32	R	W
Max_Info_Frames	Unsigned	1	O	R
Device_Address_Binding	List of BACnetAddressBinding	NULL (empty)	R	R
Database_Revision	Unsigned	0	R	R
Configuration_Files	BACnetArray[N] of BACnetObjectIdentifier	-	O	-
Last_Restore_Time	BACnetTimeStamp	-	O	-
Backup_Failure_Timeout	Unsigned16	-	O	-
Active_COV_Subscriptions	List of BACnetCOVSubscription	List of BACnetCOVSubscription	O	R
Slave_Proxy_Enable	BACnetArray[N] of BOOLEAN	-	O	-
Manual_Slave_Address_Binding	List of BACnetAddressBinding	-	O	-
Auto_Slave_Discovery	BACnetArray[N] of BOOLEAN	-	O	-
Slave_Address_Binding	BACnetAddressBinding	-	O	-
Last_Restart_Reason	BACnetRestartReason	-	O	-
Time_Of_Device_Restart	BACnetTimeStamp	-	O	-
Restart_Notification_Recipients	List of BACnetRecipient	-	O	-
UTC_Time_Synchronization_Recipients	List of BACnetRecipient	-	O	-
Time_Synchronization_Interval	Unsigned	-	O	-
Align_Intervals	BOOLEAN	-	O	-
Interval_Offset	Unsigned	-	O	-
Profile_Name	CharacterString	-	O	-

7.1.3.2. OnOff_status (Binary Input Object Type)

It indicates if the indoor unit is turned on or off.

Property Identifier	Property Datatype	Value	ASHRAE	Gateway
Object_Identifier	BACnetObjectIdentifier	(Binary Input, 0)	R	R
Object_Name	CharacterString	OnOff_status	R	R
Object_Type	BACnetObjectType	BINARY_INPUT (3)	R	R
Present_Value	BACnetBinaryPV	INACTIVE (0) / ACTIVE (1)	R	R
Description	CharacterString	-	O	-
Device_Type	CharacterString	-	O	-
Status_Flags	BACnetStatusFlags	{FALSE, FALSE/TRUE, FALSE, FALSE}	R	R
Event_State	BACnetEventState	STATE_NORMAL (0)	R	R
Reliability	BACnetReliability	NO_FAULT_DETECTED (0), UNRELIABLE_OTHER (7)	O	R
Out_Of_Service	BOOLEAN	FALSE	R	R
Polarity	BACnetPolarity	NORMAL (0)	R	R
Inactive_Text	CharacterString	Off	O	R
Active_Text	CharacterString	On	O	R
Change_Of_State_Time	BACnetDatetime	-	O	-
Change_Of_State_Count	Unsigned	-	O	-
Time_Of_State_Count_Reset	BACnetDatetime	-	O	-
Elapsed_Active_Time	Unsigned	-	O	-
Time_Of_Active_Time_Reset	BACnetDatetime	-	O	-
Time_Delay	Unsigned	-	O	-
Notification_Class	Unsigned	-	O	-
Alarm_Value	BACnetBinaryPV	-	O	-
Event_Enable	BACnetEventTransitionBits	-	O	-
Acked_Transitions	BACnetEventTransitionBits	-	O	-
Notify_Type	BACnetNotifyType	-	O	-
Event_Time_Stamps	BACnetArray[N] of BACnetTimeStamp	-	O	-
Profile_Name	CharacterString	-	O	-

7.1.3.3. OnOff_command (Binary Output Object Type)

It turns the indoor unit on or off.

Property Identifier	Property Datatype	Value	ASHRAE	Gateway
Object_Identifier	BACnetObjectIdentifier	(Binary Output, 0)	R	R
Object_Name	CharacterString	OnOff_command	R	R
Object_Type	BACnetObjectType	BINARY_OUTPUT (4)	R	R
Present_Value	BACnetBinaryPV	INACTIVE (0) / ACTIVE (1)	R	W
Description	CharacterString	-	O	-
Device_Type	CharacterString	-	O	-
Status_Flags	BACnetStatusFlags	{FALSE, FALSE, FALSE, FALSE}	R	R
Event_State	BACnetEventState	STATE_NORMAL (0)	R	R
Reliability	BACnetReliability	NO_FAULT_DETECTED (0)	O	R
Out_Of_Service	BOOLEAN	FALSE	R	R
Polarity	BACnetPolarity	NORMAL (0)	R	R
Inactive_Text	CharacterString	Off	O	R
Active_Text	CharacterString	On	O	R
Change_Of_State_Time	BACnetDatetime	-	O	-
Change_Of_State_Count	Unsigned	-	O	-
Time_Of_State_Count_Reset	BACnetDatetime	-	O	-
Elapsed_Active_Time	Unsigned	-	O	-
Time_Of_Active_Time_Reset	BACnetDatetime	-	O	-
Minimum_Off_Time	Unsigned32	-	O	-
Minimum_On_Time	Unsigned32	-	O	-
Priority_Array	BACnetPriorityArray	BACnetPriorityArray	R	R
Relinquish_Default	BACnetBinaryPV	INACTIVE (0)	R	R
Time Delay	Unsigned	-	O	-
Notification_Class	Unsigned	-	O	-
Feedback_Value	BACnetBinaryPV	-	O	-
Event_Enable	BACnetEventTransitionBits	-	O	-
Acked_Transitions	BACnetEventTransitionBits	-	O	-
Notify_Type	BACnetNotifyType	-	O	-
Event_Time_Stamps	BACnetArray[N] of BACnetTimeStamp	-	O	-
Profile_Name	CharacterString	-	O	-

7.1.3.4. Mode_status (Multistate Input Object Type)

It indicates the indoor unit's current mode.

Property Identifier	Property Datatype	Value	ASHRAE	Gateway
Object_Identifier	BACnetObjectIdentifier	(Multistate Input, 0)	R	R
Object_Name	CharacterString	Mode_status	R	R
Object_Type	BACnetObjectType	MULTISTATE_INPUT (13)	R	R
Present_Value	Unsigned	1 .. 8	R	R
Description	CharacterString	-	O	-
Device_Type	CharacterString	-	O	-
Status_Flags	BACnetStatusFlags	{FALSE, FALSE/TRUE, FALSE, FALSE}	R	R
Event_State	BACnetEventState	STATE_NORMAL (0)	R	R
Reliability	BACnetReliability	NO_FAULT_DETECTED (0), UNRELIABLE_OTHER(7)	O	R
Out_Of_Service	BOOLEAN	FALSE	R	R
Number_Of_States	Unsigned	8	R	R
State_Text	BACnetArray[N] of CharacterString	Check the **Mode status** table below.	O	R
Time_Delay	Unsigned	-	O	-
Notification_Class	Unsigned	-	O	-
Alarm_Values	List of Unsigned	-	O	-
Fault_Values	List of Unsigned	-	O	-
Event_Enable	BACnetEventTransitionBits	-	O	-
Acked_Transitions	BACnetEventTransitionBits	-	O	-
Notify_Type	BACnetNotifyType	-	O	-
Event_Time_Stamps	BACnetArray[N] of BACnetTimeStamp	-	O	-
Profile_Name	CharacterString	-	O	-

Table 5. Mode status

Present_Value	State_Text
1	Heat
2	Cool
3	Fan
4	Dry
5	Auto
6	AutoHeat
7	AutoCool
8	AutoFan

NOTE

When setting the control mode in Auto, the AC unit itself decides the appropriate mode.

7.1.3.5. Mode_command (Multistate Output Object Type)

It sets the AC indoor unit's mode.

Property Identifier	Property Datatype	Value	ASHRAE	Gateway
Object_Identifier	BACnetObjectIdentifier	(Multistate Output,0)	R	R
Object_Name	CharacterString	Mode_command	R	R
Object_Type	BACnetObjectType	MULTISTATE_OUTPUT (14)	R	R
Present_Value	Unsigned	1 .. 5	R	W
Description	CharacterString	-	O	-
Device_Type	CharacterString	-	O	-
Status_Flags	BACnetStatusFlags	{FALSE, FALSE, FALSE, FALSE}	R	R
Event_State	BACnetEventState	STATE_NORMAL (0)	R	R
Reliability	BACnetReliability	NO_FAULT_DETECTED (0)	O	R
Out_Of_Service	BOOLEAN	FALSE	R	R
Number_Of_States	Unsigned	5	R	R
State_Text	BACnetArray[N] of CharacterString	Check the **Mode command** table below	O	R
Priority_Array	BACnetPriorityArray	BACnetPriorityArray	R	R
Relinquish_Default	Unsigned	1	R	R
Time_Delay	Unsigned	-	O	-
Notification_Class	Unsigned	-	O	-
Feedback_Value	Unsigned	-	O	-
Event_Enable	BACnetEventTransitionBits	-	O	-
Acked_Transitions	BACnetEventTransitionBits	-	O	-
Notify_Type	BACnetNotifyType	-	O	-
Event_Time_Stamps	BACnetArray[N] of BACnetTimeStamp	-	O	-
Profile_Name	CharacterString	-	O	-

Table 6. Mode command

Present_Value	State_Text
1	Heat
2	Cool
3	Fan
4	Dry
5	Auto

NOTE
When setting the control mode in Auto, the AC unit itself decides the appropriate mode.

7.1.3.6. VirtualTempActive (Binary Input Object Type)

It indicates if the Virtual Temperature function is active or inactive.

NOTE

The Virtual Temperature function allows the gateway to set the reference temperature using the value reported by a sensor connected to the BMS.

For more information, see Virtual Temperature Function (page 56).

Property Identifier	Property Datatype	Value	ASHRAE	Gateway
Object_Identifier	BACnetObjectIdentifier	(Binary Input, 14)	R	R
Object_Name	CharacterString	VirtualTempActive	R	R
Object_Type	BACnetObjectType	BINARY_INPUT (3)	R	R
Present_Value	BACnetBinaryPV	INACTIVE (0) / ACTIVE (1)	R	R
Description	CharacterString	-	O	-
Device_Type	CharacterString	-	O	-
Status_Flags	BACnetStatusFlags	{FALSE, FALSE, FALSE, FALSE}	R	R
Event_State	BACnetEventState	STATE_NORMAL (0)	R	R
Reliability	BACnetReliability	NO_FAULT_DETECTED (0) UNRELIABLE_OTHER (7)	O	R
Out_Of_Service	BOOLEAN	FALSE	R	R
Polarity	BACnetPolarity	NORMAL (0)	R	R
Inactive_Text	CharacterString	No	O	R
Active_Text	CharacterString	Yes	O	R
Change_Of_State_Time	BACnetDatetime	-	O	-
Change_Of_State_Count	Unsigned	-	O	-
Time_Of_State_Count_Reset	BACnetDatetime	-	O	-
Elapsed_Active_Time	Unsigned	-	O	-
Time_Of_Active_Time_Reset	BACnetDatetime	-	O	-
Time_Delay	Unsigned	-	O	-
Notification_Class	Unsigned	-	O	-
Alarm_Value	BACnetBinaryPV	-	O	-
Event_Enable	BACnetEventTransitionBits	-	O	-
Acked_Transitions	BACnetEventTransitionBits	-	O	-
Notify_Type	BACnetNotifyType	-	O	-
Event_Time_Stamps	BACnetArray[N] of BACnetTimeStamp	-	O	-
Profile_Name	CharacterString	-	O	-

7.1.3.7. Setpoint_status (Analog Input Object Type)

It reports the temperature setpoint requested to the indoor unit.

NOTE
To know more, see Considerations on Temperature Signals (page 57).

Property Identifier	Property Datatype	Value	ASHRAE	Gateway
Object_Identifier	BACnetObjectIdentifier	(Analog Input, 0)	R	R
Object_Name	CharacterString	SetPoint_status	R	R
Object_Type	BACnetObjectType	ANALOG_INPUT (0)	R	R
Present_Value	REAL	For cool mode: 18 .. 32°C / 64 .. 90°F For heat mode: 10 .. 30°C / 50 .. 86°F	R	R
Description	CharacterString	-	O	-
Device_Type	CharacterString	-	O	-
Status_Flags	BACnetStatusFlags	{FALSE, FALSE/TRUE, FALSE, FALSE}	R	R
Event_State	BACnetEventState	STATE_NORMAL (0)	R	R
Reliability	BACnetReliability	NO_FAULT_DETECTED (0), UNRELIABLE_OTHER (7)	O	R
Out_Of_Service	BOOLEAN	FALSE	R	R
Update_Interval	Unsigned	-	O	-
Units	BACnetEngineeringUnits	Celsius degrees (62) Fahrenheit degrees (64)	R	R
Min_Pres_Value	REAL	For cool mode: 18°C / 64°F For heat mode: 10°C / 50°F	O	R
Max_Pres_Value	REAL	For cool mode: 32°C / 90°F For heat mode: 30°C / 86°F	O	R
Resolution	REAL	-	O	-
COV_Increment	REAL	0	O	W
Time_Delay	Unsigned	-	O	-
Notification_Class	Unsigned	-	O	-
High_Limit	REAL	-	O	-
Low_Limit	REAL	-	O	-
Deadband	REAL	-	O	-
Limit_Enable	BACnetLimitEnable	-	O	-
Event_Enable	BACnetEventTransitionBits	-	O	-
Acked_Transitions	BACnetEventTransitionBits	-	O	-
Notify_Type	BACnetNotifyType	-	O	-
Event_Time_Stamps	BACnetArray[N] of BACnetTimeStamp	-	O	-
Profile_Name	CharacterString	-	O	-

NOTE
You can set the temperature scale in Celsius or Fahrenheit via the DIP switches. More information in DIP switches (page 11).

7.1.3.8. Setpoint_command (Analog Output Object Type)

It is used to request a temperature setpoint from the BACnet side.

NOTE
To know more, see Considerations on Temperature Signals (page 57).

Property Identifier	Property Datatype	Value	ASHRAE	Gateway
Object_Identifier	BACnetObjectIdentifier	(Analog Output, 0)	R	R
Object_Name	CharacterString	SetPoint_command	R	R
Object_Type	BACnetObjectType	ANALOG_OUTPUT (1)	R	R
Present_Value	REAL	For cool mode: 18 .. 32°C / 64 .. 90°F For heat mode: 10 .. 30°C / 50 .. 86°F	W	W
Status_Flags	BACnetStatusFlags	{FALSE, FALSE, FALSE, FALSE}	R	R
Event_State	BACnetEventState	STATE_NORMAL (0)	R	R
Reliability	BACnetReliability	NO_FAULT_DETECTED (0)	O	R
Out_Of_Service	BOOLEAN	FALSE	R	R
Update_Interval	Unsigned	-	O	-
Units	BACnetEngineeringUnits	Celsius degrees (62) Fahrenheit degrees (64)	R	R
Min_Pres_Value	REAL	For cool mode: 18°C / 64°F For heat mode: 10°C / 50°F	O	R
Max_Pres_Value	REAL	For cool mode: 32°C / 90°F For heat mode: 30°C / 86°F	O	R
Resolution	R	-	O	-
COV_Increment	REAL	0	O	W
Priority_Array	BACnetPriorityArray	BACnetPriorityArray	R	R
Relinquish_Default	Unsigned	22	R	R
Time_Delay	Unsigned	-	O	-
Notification_Class	Unsigned	-	O	-
High_Limit	REAL	-	O	-
Low_Limit	REAL	-	O	-
Deadband	REAL	-	O	-
Limit_Enable	BACnetLimitEnable	-	O	-
Event_Enable	BACnetEventTransitionBits	-	O	-
Acked_Transitions	BACnetEventTransitionBits	-	O	-
Notify_Type	BACnetNotifyType	-	O	-
Event_Time_Stamps	BACnetArray[N] of BACnetTimeStamp	-	O	-
Profile_Name	CharacterString	-	O	-

NOTE
You can set the temperature scale in Celsius or Fahrenheit via the DIP switches. More information in DIP switches (page 11).

7.1.3.9. UserSetpoint_status (Analog Input Object Type)

It reports the value written in the Setpoint_command object.

NOTE
To know more, see Considerations on Temperature Signals (page 57).

Property Identifier	Property Datatype	Value	ASHRAE	Gateway
Object_Identifier	BACnetObjectIdentifier	(Analog Input, 17)	R	R
Object_Name	CharacterString	UserSetPoint_status	R	R
Object_Type	BACnetObjectType	ANALOG_INPUT (0)	R	R
Present_Value	REAL	16 .. 32°C / 61 .. 90°F	R	R
Description	CharacterString	-	O	-
Device_Type	CharacterString	-	O	-
Status_Flags	BACnetStatusFlags	{FALSE, FALSE, FALSE, FALSE}	R	R
Event_State	BACnetEventState	STATE_NORMAL (0)	R	R
Reliability	BACnetReliability	NO_FAULT_DETECTED (0) UNRELIABLE_OTHER (7)	O	R
Out_Of_Service	BOOLEAN	FALSE	R	R
Update_Interval	Unsigned	300	O	-
Units	BACnetEngineeringUnits	Celsius degrees (62) Farenheit degrees (64)	R	R
Min_Pres_Value	REAL	16°C / 61°F	O	-
Max_Pres_Value	REAL	32°C / 90°F	O	-
Resolution	REAL	-	O	-
COV_Increment	REAL	0	O	W
Time_Delay	Unsigned	-	O	-
Notification_Class	Unsigned	-	O	-
High_Limit	REAL	-	O	-
Low_Limit	REAL	-	O	-
Deadband	REAL	-	O	-
Limit_Enable	BACnetLimitEnable	-	O	-
Event_Enable	BACnetEventTransitionBits	-	O	-
Acked_Transitions	BACnetEventTransitionBits	-	O	-
Notify_Type	BACnetNotifyType	-	O	-
Event_Time_Stamps	BACnetArray[N] of BACnetTimeStamp	-	O	-
Profile_Name	CharacterString	-	O	-

NOTE
You can set the temperature scale in Celsius or Fahrenheit scale via DIP switches. More information in DIP switches (page 11).

7.1.3.10. RoomTemperature_status (Analog Input Object Type)

It reports the ambient temperature measured by the sensor from the AC system side.

NOTE
To know more, see Considerations on Temperature Signals (page 57).

Property Identifier	Property Datatype	Value	ASHRAE	Gateway
Object_Identifier	BACnetObjectIdentifier	(Analog Input, 1)	R	R
Object_Name	CharacterString	RoomTemperature_status	R	R
Object_Type	BACnetObjectType	ANALOG_INPUT (0)	R	R
Present_Value	REAL	10 .. 38°C / 50 .. 100°F	R	R
Description	CharacterString	-	O	-
Device_Type	CharacterString	-	O	-
Status_Flags	BACnetStatusFlags	{FALSE, FALSE/TRUE, FALSE, FALSE}	R	R
Event_State	BACnetEventState	STATE_NORMAL (0)	R	R
Reliability	BACnetReliability	NO_FAULT_DETECTED (0), UNRELIABLE_OTHER (7)	O	R
Out_Of_Service	BOOLEAN	FALSE	R	R
Update_Interval	Unsigned	-	O	-
Units	BACnetEngineeringUnits	Celsius degrees (62) Fahrenheit degrees (64)	R	R
Min_Pres_Value	REAL	10°C / 50°F	O	-
Max_Pres_Value	REAL	38°C / 100°F	O	-
Resolution	REAL	-	O	-
COV_Increment	REAL	0	O	W
Time_Delay	Unsigned	-	O	-
Notification_Class	Unsigned	-	O	-
High_Limit	REAL	-	O	-
Low_Limit	REAL	-	O	-
Deadband	REAL	-	O	-
Limit_Enable	BACnetLimitEnable	-	O	-
Event_Enable	BACnetEventTransitionBits	-	O	-
Acked_Transitions	BACnetEventTransitionBits	-	O	-
Notify_Type	BACnetNotifyType	-	O	-
Event_Time_Stamps	BACnetArray[N] of BACnetTimeStamp	-	O	-
Profile_Name	CharacterString	-	O	-

NOTE
You can set the temperature scale in Celsius or Fahrenheit scale via DIP switches. More information in DIP switches (page 11).

7.1.3.11. RoomTemperature_command (Analog Output Object Type)

It is used to write the ambient temperature measured by a sensor from the BACnet side.

NOTE
To know more, see Considerations on Temperature Signals (page 57).

Property Identifier	Property Datatype	Value	ASHRAE	Gateway
Object_Identifier	BACnetObjectIdentifier	(Analog Output, 1)	R	R
Object_Name	CharacterString	RoomTemperature_command	R	R
Object_Type	BACnetObjectType	ANALOG_OUTPUT (1)	R	R
Present_Value	REAL	10 .. 38°C / 50 .. 100°F	R	W
Description	CharacterString	-	O	-
Device_Type	CharacterString	-	O	-
Status_Flags	BACnetStatusFlags	{FALSE, FALSE, FALSE, FALSE}	R	R
Event_State	BACnetEventState	STATE_NORMAL (0)	R	R
Reliability	BACnetReliability	NO_FAULT_DETECTED (0)	O	R
Out_Of_Service	BOOLEAN	FALSE	R	R
Update_Interval	Unsigned	-	O	-
Units	BACnetEngineeringUnits	Celsius degrees (62) Fahrenheit degrees (64)	R	R
Min_Pres_Value	REAL	10°C / 50°F	O	-
Max_Pres_Value	REAL	38°C / 100°F	O	-
Resolution	REAL	-	O	-
COV_Increment	REAL	0	O	W
Priority_Array	BACnetPriorityArray	BACnetPriorityArray	R	R
Relinquish_Default	Unsigned	-32768	R	W
Time_Delay	Unsigned	-	O	-
Notification_Class	Unsigned	-	O	-
High_Limit	REAL	-	O	-
Low_Limit	REAL	-	O	-
Deadband	REAL	-	O	-
Limit_Enable	BACnetLimitEnable	-	O	-
Event_Enable	BACnetEventTransitionBits	-	O	-
Acked_Transitions	BACnetEventTransitionBits	-	O	-
Notify_Type	BACnetNotifyType	-	O	-
Event_Time_Stamps	BACnetArray[N] of BACnetTimeStamp	-	O	-
Profile_Name	CharacterString	-	O	-

NOTE
You can set the temperature scale in Celsius or Fahrenheit scale via DIP switches. More information in DIP switches (page 11).

7.1.3.12. FanSpeed_status (Multistate Input Object Type)

It indicates the indoor unit's fan speed.

Property Identifier	Property Datatype	Value	ASHRAE	Gateway
Object_Identifier	BACnetObjectIdentifier	(Multistate Input, 1)	R	R
Object_Name	CharacterString	FanSpeed_status	R	R
Object_Type	BACnetObjectType	MULTISTATE_INPUT (13)	R	R
Present_Value	Unsigned	1 .. 6	R	R
Description	CharacterString	-	O	-
Device_Type	CharacterString	-	O	-
Status_Flags	BACnetStatusFlags	{FALSE, FALSE/TRUE, FALSE, FALSE}	R	R
Event_State	BACnetEventState	STATE_NORMAL (0)	R	R
Reliability	BACnetReliability	NO_FAULT_DETECTED (0), UNRELIABLE_OTHER (7)	O	R
Out_Of_Service	BOOLEAN	FALSE/TRUE	R	R
Number_Of_States	Unsigned	6	R	R
State_Text	BACnetArray[N] of CharacterString	Check the **Fan speed status** table below.	O	R
Time_Delay	Unsigned	-	O	-
Notification_Class	Unsigned	-	O	-
Alarm_Values	List of Unsigned	-	O	-
Fault_Values	List of Unsigned	-	O	-
Event_Enable	BACnetEventTransitionBits	-	O	-
Acked_Transitions	BACnetEventTransitionBits	-	O	-
Notify_Type	BACnetNotifyType	-	O	-
Event_Time_Stamps	BACnetArray[N] of BACnetTimeStamp	-	O	-
Profile_Name	CharacterString	-	O	-

Table 7. Fan speed status

Present_Value	State_Text
1	Auto
2	Fan Speed 1
3	Fan Speed 2
4	Fan Speed 3
5	Fan Speed 4
6	Fan Speed 5

7.1.3.13. FanSpeed_command (Multistate Output Object Type)

It sets the indoor unit's fan speed.

Property Identifier	Property Datatype	Value	ASHRAE	Gateway
Object_Identifier	BACnetObjectIdentifier	(Multistate Output, 1)	R	R
Object_Name	CharacterString	FanSpeed_command	R	R
Object_Type	BACnetObjectType	MULTISTATE_OUTPUT (14)	R	R
Present_Value	Unsigned	1 .. 6	R	W
Description	CharacterString	-	O	-
Device_Type	CharacterString	-	O	-
Status_Flags	BACnetStatusFlags	{FALSE, FALSE, FALSE, FALSE}	R	R
Event_State	BACnetEventState	STATE_NORMAL (0)	R	R
Reliability	BACnetReliability	NO_FAULT_DETECTED (0)	O	R
Out_Of_Service	BOOLEAN	FALSE	R	R
Number_Of_States	Unsigned	6	R	R
State_Text	BACnetArray[N] of CharacterString	Check the **Fan speed command** table below	O	R
Priority_Array	BACnetPriorityArray	BACnetPriorityArray	R	R
Relinquish_Default	Unsigned	1	R	R
Time_Delay	Unsigned	-	O	-
Notification_Class	Unsigned	-	O	-
Feedback_Value	Unsigned	-	O	-
Event_Enable	BACnetEventTransitionBits	-	O	-
Acked_Transitions	BACnetEventTransitionBits	-	O	-
Notify_Type	BACnetNotifyType	-	O	-
Event_Time_Stamps	BACnetArray[N] of BACnetTimeStamp	-	O	-
Profile_Name	CharacterString	-	O	-

Table 8. Fan speed command

Present_Value	State_Text
1	Auto
2	Fan Speed 1
3	Fan Speed 2
4	Fan Speed 3
5	Fan Speed 4
6	Fan Speed 5

7.1.3.14. AirDirectionUD_status (Multistate Input Object Type)

It indicates the indoor unit's vertical air direction (up-down) status.

Property Identifier	Property Datatype	Value	ASHRAE	Gateway
Object_Identifier	BACnetObjectIdentifier	(Multistate Input, 2)	R	R
Object_Name	CharacterString	AirDirectionUD_status	R	R
Object_Type	BACnetObjectType	MULTISTATE_INPUT(13)	R	R
Present_Value	Unsigned	1 .. 2	R	R
Description	CharacterString	-	O	-
Device_Type	CharacterString	-	O	-
Status_Flags	BACnetStatusFlags	{FALSE, FALSE/TRUE, FALSE, FALSE}	R	R
Event_State	BACnetEventState	STATE_NORMAL (0)	R	R
Reliability	BACnetReliability	NO_FAULT_DETECTED (0), UNRELIABLE_OTHER (7)	O	R
Out_Of_Service	BOOLEAN	FALSE/TRUE	R	R
Number_Of_States	Unsigned	2	R	R
State_Text	BACnetArray[N] of CharacterString	Check the **Air direction up-down status** table below.	O	R
Time_Delay	Unsigned	-	O	-
Notification_Class	Unsigned	-	O	-
Alarm_Values	List of Unsigned	-	O	-
Fault_Values	List of Unsigned	-	O	-
Event_Enable	BACnetEventTransitionBits	-	O	-
Acked_Transitions	BACnetEventTransitionBits	-	O	-
Notify_Type	BACnetNotifyType	-	O	-
Event_Time_Stamps	BACnetArray[N] of BACnetTimeStamp	-	O	-
Profile_Name	CharacterString	-	O	-

Table 9. Air direction up-down status

Present_Value	State_Text
1	Stop
2	Swing

7.1.3.15. AirDirectionUD_command (Multistate Output Object Type)

It sets the indoor unit's vertical air direction (up-down).

Property Identifier	Property Datatype	Value	ASHRAE	Gateway
Object_Identifier	BACnetObjectIdentifier	(Multistate Output, 2)	R	R
Object_Name	CharacterString	AirDirectionUD_command	R	R
Object_Type	BACnetObjectType	MULTISTATE_OUTPUT (14)	R	R
Present_Value	Unsigned	1 .. 2	R	W
Description	CharacterString	-	O	-
Device_Type	CharacterString	-	O	-
Status_Flags	BACnetStatusFlags	{FALSE, FALSE, FALSE, FALSE}	R	R
Event_State	BACnetEventState	STATE_NORMAL (0)	R	R
Reliability	BACnetReliability	NO_FAULT_DETECTED (0)	O	R
Out_Of_Service	BOOLEAN	FALSE	R	R
Number_Of_States	Unsigned	2	R	R
State_Text	BACnetArray[N] of CharacterString	Check the **Air direction up-down command** table below	O	R
Priority_Array	BACnetPriorityArray	-	R	R
Relinquish_Default	Unsigned	-	R	R
Time_Delay	Unsigned	-	O	-
Notification_Class	Unsigned	-	O	-
Feedback_Value	Unsigned	-	O	-
Event_Enable	BACnetEventTransitionBits	-	O	-
Acked_Transitions	BACnetEventTransitionBits	-	O	-
Notify_Type	BACnetNotifyType	-	O	-
Event_Time_Stamps	BACnetArray[N] of BACnetTimeStamp	-	O	-
Profile_Name	CharacterString	-	O	-

Table 10. Air direction up-down command

Present_Value	State_Text
1	Stop
2	Swing

7.1.3.16. AirDirectionLR_status (Multistate Input Object Type)

It indicates the current indoor unit's horizontal air direction (left-right) status.

Property Identifier	Property Datatype	Value	ASHRAE	Gateway
Object_Identifier	BACnetObjectIdentifier	(Multistate Input, 3)	R	R
Object_Name	CharacterString	AirDirectionLR_status	R	R
Object_Type	BACnetObjectType	MULTISTATE_INPUT(13)	R	R
Present_Value	Unsigned	1 .. 2	R	R
Description	CharacterString	-	O	-
Device_Type	CharacterString	-	O	-
Status_Flags	BACnetStatusFlags	{FALSE, FALSE/TRUE, FALSE, FALSE}	R	R
Event_State	BACnetEventState	STATE_NORMAL (0)	R	R
Reliability	BACnetReliability	NO_FAULT_DETECTED (0), UNRELIABLE_OTHER (7)	O	R
Out_Of_Service	BOOLEAN	FALSE/TRUE	R	R
Number_Of_States	Unsigned	2	R	R
State_Text	BACnetArray[N] of CharacterString	Check the **Air direction left-right status** table below.	O	R
Time_Delay	Unsigned	-	O	-
Notification_Class	Unsigned	-	O	-
Alarm_Values	List of Unsigned	-	O	-
Fault_Values	List of Unsigned	-	O	-
Event_Enable	BACnetEventTransitionBits	-	O	-
Acked_Transitions	BACnetEventTransitionBits	-	O	-
Notify_Type	BACnetNotifyType	-	O	-
Event_Time_Stamps	BACnetArray[N] of BACnetTimeStamp	-	O	-
Profile_Name	CharacterString	-	O	-

Table 11. Air direction left-right status

Present_Value	State_Text
1	Stop
2	Swing

7.1.3.17. AirDirectionLR_command (Multistate Output Object Type)

It allows control over the air direction (left-right) for the indoor unit.

Property Identifier	Property Datatype	Value	ASHRAE	Gateway
Object_Identifier	BACnetObjectIdentifier	(Multi-state Output, 3)	R	R
Object_Name	CharacterString	AirDirectionLR_command	R	R
Object_Type	BACnetObjectType	MULTISTATE_OUTPUT (14)	R	R
Present_Value	Unsigned	1 .. 2	W	W
Description	CharacterString	-	O	-
Device_Type	CharacterString	-	O	-
Status_Flags	BACnetStatusFlags	{FALSE, FALSE, FALSE, FALSE}	R	R
Event_State	BACnetEventState	STATE_NORMAL (0)	R	R
Reliability	BACnetReliability	NO_FAULT_DETECTED (0)	O	R
Out_Of_Service	BOOLEAN	FALSE	R	R
Number_Of_States	Unsigned	2	R	R
State_Text	BACnetArray[N] of CharacterString	Check the **Air direction left-right command** table below	O	R
Priority_Array	BACnetPriorityArray	-	R	R
Relinquish_Default	Unsigned	-	R	R
Time_Delay	Unsigned	-	O	-
Notification_Class	Unsigned	-	O	-
Feedback_Value	Unsigned	-	O	-
Event_Enable	BACnetEventTransitionBits	-	O	-
Acked_Transitions	BACnetEventTransitionBits	-	O	-
Notify_Type	BACnetNotifyType	-	O	-
Event_Time_Stamps	BACnetArray[N] of BACnetTimeStamp	-	O	-
Profile_Name	CharacterString	-	O	-

Table 12. Air direction left-right command

Present_Value	State_Text
1	Stop
2	Swing

7.1.3.18. ErrorCode (Analog Input Object Type)

It indicates the AC system's current error.

Property Identifier	Property Datatype	Value	ASHRAE	Gateway
Object_Identifier	BACnetObjectIdentifier	(Analog Input, 2)	R	R
Object_Name	CharacterString	ErrorCode	R	R
Object_Type	BACnetObjectType	ANALOG_INPUT (0)	R	R
Present_Value	REAL	-1 .. 6846	R	R
Description	CharacterString	-	O	-
Device_Type	CharacterString	-	O	-
Status_Flags	BACnetStatusFlags	{FALSE, FALSE, FALSE, FALSE}	R	R
Event_State	BACnetEventState	STATE_NORMAL (0)	R	R
Reliability	BACnetReliability	NO_FAULT_DETECTED (0)	O	R
Out_Of_Service	BOOLEAN	FALSE	R	R
Update_Interval	Unsigned	300	O	-
Units	BACnetEngineeringUnits	NO_UNITS (95)	R	R
Min_Pres_Value	REAL	-1	O	-
Max_Pres_Value	REAL	6846	O	-
Resolution	REAL	-	O	-
COV_Increment	REAL	0	O	W
Time_Delay	Unsigned	-	O	-
Notification_Class	Unsigned	-	O	-
High_Limit	REAL	-	O	-
Low_Limit	REAL	-	O	-
Deadband	REAL	-	O	-
Limit_Enable	BACnetLimitEnable	-	O	-
Event_Enable	BACnetEventTransitionBits	-	O	-
Acked_Transitions	BACnetEventTransitionBits	-	O	-
Notify_Type	BACnetNotifyType	-	O	-
Event_Time_Stamps	BACnetArray[N] of BACnetTimeStamp	-	O	-
Profile_Name	CharacterString	-	O	-

NOTICE

For more information on each error code, see Error Codes (page 60).

7.1.3.19. ErrorCodeM (Multistate Input Object Type)

It indicates the AC system's current error.

Property Identifier	Property Datatype	Value	ASHRAE	Gateway
Object_Identifier	BACnetObjectIdentifier	(Multistate Input, 4)	R	R
Object_Name	CharacterString	ErrorCodeM	R	R
Object_Type	BACnetObjectType	MULTISTATE_INPUT(13)	R	R
Present_Value	Unsigned	1 .. 156	R	R
Description	CharacterString	-	O	-
Device_Type	CharacterString	-	O	-
Status_Flags	BACnetStatusFlags	{FALSE, FALSE, FALSE, FALSE}	R	R
Event_State	BACnetEventState	STATE_NORMAL (0)	R	R
Reliability	BACnetReliability	NO_FAULT_DETECTED (0)	O	R
Out_Of_Service	BOOLEAN	FALSE	R	R
Number_Of_States	Unsigned	156	R	R
State_Text	BACnetArray[N] of CharacterString	Check the **Error codes** table below	O	R
Time_Delay	Unsigned	-	O	-
Notification_Class	Unsigned	-	O	-
Alarm_Values	List of Unsigned	-	O	-
Fault_Values	List of Unsigned	-	O	-
Event_Enable	BACnetEventTransitionBits	-	O	-
Acked_Transitions	BACnetEventTransitionBits	-	O	-
Notify_Type	BACnetNotifyType	-	O	-
Event_Time_Stamps	BACnetArray[N] of BACnetTimeStamp	-	O	-
Profile_Name	CharacterString	-	O	-

Table 13. Error codes

Present_Value	State_Text	Present_Value	State_Text	Present_Value	State_Text	Present_Value	State_Text
1	-	40	E9	79	J7	118	UJ
2	CommError	41	EA	80	J8	119	UE
3	A0	42	EH	81	J9	120	UF
4	A1	43	EC	82	JA	121	60
5	A2	44	EJ	83	JH	122	61
6	A3	45	EE	84	JC	123	62
7	A4	46	EF	85	JE	124	63
8	A5	47	H0	86	JF	125	64
9	A6	48	H1	87	L0	126	65
10	A7	49	H2	88	L3	127	68
11	A8	50	H3	89	L4	128	6A
12	A9	51	H4	90	L5	129	6H
13	AA	52	H5	91	L6	130	6C
14	AH	53	H6	92	L7	131	6J
15	AJ	54	H7	93	L8	132	6E
16	AE	55	H8	94	L9	133	6F
17	AF	56	H9	95	LA	134	51
18	C0	57	HA	96	LC	135	52
19	C3	58	HH	97	P0	136	53
20	C4	59	HC	98	P1	137	54
21	C5	60	HE	99	P3	138	40
22	C6	61	HF	100	P4	139	41

Present_Value	State_Text	Present_Value	State_Text	Present_Value	State_Text	Present_Value	State_Text
23	C7	62	F0	101	P5	140	42
24	C8	63	F1	102	P6	141	43
25	C9	64	F2	103	P7	142	44
26	CA	65	F3	104	PJ	143	31
27	CH	66	F6	105	U0	144	32
28	CC	67	FA	106	U1	145	33
29	CJ	68	FH	107	U2	146	34
30	CE	69	FC	108	U3	147	35
31	CF	70	FE	109	U4	148	36
32	E0	71	FF	110	U5	149	3a
33	E1	72	J0	111	U6	150	3H
34	E3	73	J1	112	U7	151	3C
35	E4	74	J2	113	U8	152	M2
36	E5	75	J3	114	U9	153	M8
37	E6	76	J4	115	UA	154	MA
38	E7	77	J5	116	UH	155	MC
39	E8	78	J6	117	UC	156	Unknown

TIP

For more information on each error code, see Error Codes (page 60).

7.1.3.20. ErrorActive (Binary Input Object Type)

It indicates if there is an active error in the AC system.

Property Identifier	Property Datatype	Value	ASHRAE	Gateway
Object_Identifier	BACnetObjectIdentifier	(Binary Input, 1)	R	R
Object_Name	CharacterString	ErrorActive	R	R
Object_Type	BACnetObjectType	BINARY_INPUT (3)	R	R
Present_Value	BACnetBinaryPV	INACTIVE (0) / ACTIVE (1)	R	R
Description	CharacterString	-	O	-
Device_Type	CharacterString	-	O	-
Status_Flags	BACnetStatusFlags	{FALSE, FALSE, FALSE, FALSE}	R	R
Event_State	BACnetEventState	STATE_NORMAL (0)	R	R
Reliability	BACnetReliability	NO_FAULT_DETECTED (0)	O	R
Out_Of_Service	BOOLEAN	FALSE	R	R
Polarity	BACnetPolarity	NORMAL (0)	R	R
Inactive_Text	CharacterString	No	O	R
Active_Text	CharacterString	Error	O	R
Change_Of_State_Time	BACnetDatetime	-	O	-
Change_Of_State_Count	Unsigned	-	O	-
Time_Of_State_Count_Reset	BACnetDatetime	-	O	-
Elapsed_Active_Time	Unsigned	-	O	-
Time_Of_Active_Time_Reset	BACnetDatetime	-	O	-
Time_Delay	Unsigned	-	O	-
Notification_Class	Unsigned	-	O	-
Alarm_Value	BACnetBinaryPV	-	O	-
Event_Enable	BACnetEventTransitionBits	-	O	-
Acked_Transitions	BACnetEventTransitionBits	-	O	-
Notify_Type	BACnetNotifyType	-	O	-
Event_Time_Stamps	BACnetArray[N] of BACnetTimeStamp	-	O	-
Profile_Name	CharacterString	-	O	-

7.1.3.21. OnTimeCounter (Analog Value Object Type)

It indicates the AC unit running time.

Property Identifier	Property Datatype	Value	ASHRAE	Gateway
Object_Identifier	BACnetObjectIdentifier	(Analog Value, 0)	R	R
Object_Name	CharacterString	OnTimeCounter	R	R
Object_Type	BACnetObjectType	ANALOG_VALUE (2)	R	R
Present_Value	REAL	0 .. 65535	R	R/W
Description	CharacterString	-	O	-
Status_Flags	BACnetStatusFlags	{FALSE, FALSE, FALSE, FALSE}	R	R
Event_State	BACnetEventState	STATE_NORMAL (0)	R	R
Reliability	BACnetReliability	NO_FAULT_DETECTED (0)	O	R
Out_Of_Service	BOOLEAN	FALSE	R	R
Update_Interval	Unsigned	-	O	-
Units	BACnetEngineeringUnits	Hours (71)	R	R
Min_Pres_Value	REAL	0	O	-
Max_Pres_Value	REAL	65535	O	-
Resolution	REAL	-	O	-
COV_Increment	REAL	0	O	W
Time_Delay	Unsigned	-	O	-
Notification_Class	Unsigned	-	O	-
High_Limit	REAL	-	O	-
Low_Limit	REAL	-	O	-
Deadband	REAL	-	O	-
Limit_Enable	BACnetLimitEnable	-	O	-
Event_Enable	BACnetEventTransitionBits	-	O	-
Acked_Transitions	BACnetEventTransitionBits	-	O	-
Notify_Type	BACnetNotifyType	-	O	-
Event_Time_Stamps	BACnetArray[N] of BACnetTimeStamp	-	O	-
Profile_Name	CharacterString	-	O	-

7.1.3.22. Occupancy (Multistate Value Object Type)

It indicates the current occupancy status.

NOTE

To know more, see Occupancy Function (page 54).

Property Identifier	Property Datatype	Value	ASHRAE	Gateway
Object_Identifier	BACnetObjectIdentifier	(Multistate Value, 0)	R	R
Object_Name	CharacterString	Occupancy	R	R
Object_Type	BACnetObjectType	MULTISTATE_VALUE (19)	R	R
Present_Value	BACnetBinaryPV	1 .. 3	R	R/W
Description	CharacterString	-	O	-
Status_Flags	BACnetStatusFlags	{FALSE, FALSE, FALSE, FALSE}	R	R
Event_State	BACnetEventState	STATE_NORMAL (0)	R	R
Reliability	BACnetReliability	NO_FAULT_DETECTED (0)	O	R
Out_Of_Service	BOOLEAN	FALSE	R	R
Number_Of_States	Unsigned	3	R	R
State_Text	BACnetArray[N] of CharacterString	Check the **Occupancy values** table below	O	R
Priority_Array	BACnetPriorityArray	-	R	-
Relinquish_Default	Unsigned	-	R	-
Time_Delay	Unsigned	-	O	-
Notification_Class	Unsigned	-	O	-
Alarm_Value	Unsigned	-	O	-
Event_Enable	BACnetEventTransitionBits	-	O	-
Acked_Transitions	BACnetEventTransitionBits	-	O	-
Notify_Type	BACnetNotifyType	-	O	-
Event_Time_Stamps	BACnetArray[N] of BACnetTimeStamp	-	O	-
Profile_Name	CharacterString	-	O	-

Table 14. Occupancy values

Present_Value	State_Text
1	Occupied
2	Unoccupied
3	Disabled

7.1.3.23. OccupiedCoolSetPoint (Analog Value Object Type)

It indicates the temperature setpoint when the room is occupied, the cool mode is selected, and the occupancy object is enabled.

NOTE
To know more, see Occupancy Function (page 54).

Property Identifier	Property Datatype	Value	ASHRAE	Gateway
Object_Identifier	BACnetObjectIdentifier	(Analog Value, 1)	R	R
Object_Name	CharacterString	OccupiedCoolSetPoint	R	R
Object_Type	BACnetObjectType	ANALOG_VALUE (2)	R	R
Present_Value	REAL	0 .. 65535	R	R/W
Description	CharacterString	-	O	-
Status_Flags	BACnetStatusFlags	{FALSE, FALSE, FALSE, FALSE}	R	R
Event_State	BACnetEventState	STATE_NORMAL (0)	R	R
Reliability	BACnetReliability	NO_FAULT_DETECTED (0)	O	R
Out_Of_Service	BOOLEAN	FALSE	R	R
Update_Interval	Unsigned	-	O	-
Units	BACnetEngineeringUnits	Degrees Celsius (62) Degrees Fahrenheit (64)	R	R
Min_Pres_Value	REAL	0	O	-
Max_Pres_Value	REAL	65535	O	-
Resolution	REAL	-	O	-
COV_Increment	REAL	0	O	W
Time_Delay	Unsigned	-	O	-
Notification_Class	Unsigned	-	O	-
High_Limit	REAL	-	O	-
Low_Limit	REAL	-	O	-
Deadband	REAL	-	O	-
Limit_Enable	BACnetLimitEnable	-	O	-
Event_Enable	BACnetEventTransitionBits	-	O	-
Acked_Transitions	BACnetEventTransitionBits	-	O	-
Notify_Type	BACnetNotifyType	-	O	-
Event_Time_Stamps	BACnetArray[N] of BACnetTimeStamp	-	O	-
Profile_Name	CharacterString	-	O	-

NOTE
You can set the temperature scale in Celsius or Fahrenheit scale via DIP switches. More information in DIP switches (page 11).

7.1.3.24. OccupiedHeatSetPoint (Analog Value Object Type)

It indicates the temperature setpoint when the room is occupied, the heat mode is selected, and the occupancy object is enabled.

NOTE
To know more, see Occupancy Function (page 54).

Property Identifier	Property Datatype	Value	ASHRAE	Gateway
Object_Identifier	BACnetObjectIdentifier	(Analog Value, 2)	R	R
Object_Name	CharacterString	OccupiedHeatSetPoint	R	R
Object_Type	BACnetObjectType	ANALOG_VALUE (2)	R	R
Present_Value	REAL	0 .. 65535	R	R/W
Description	CharacterString	-	O	-
Status_Flags	BACnetStatusFlags	{FALSE, FALSE, FALSE, FALSE}	R	R
Event_State	BACnetEventState	STATE_NORMAL (0)	R	R
Reliability	BACnetReliability	NO_FAULT_DETECTED (0)	O	R
Out_Of_Service	BOOLEAN	FALSE	R	R
Update_Interval	Unsigned	-	O	-
Units	BACnetEngineeringUnits	Degrees Celsius (62) Degrees Fahrenheit (64)	R	R
Min_Pres_Value	REAL	0	O	-
Max_Pres_Value	REAL	65535	O	-
Resolution	REAL	-	O	-
COV_Increment	REAL	0	O	W
Time_Delay	Unsigned	-	O	-
Notification_Class	Unsigned	-	O	-
High_Limit	REAL	-	O	-
Low_Limit	REAL	-	O	-
Deadband	REAL	-	O	-
Limit_Enable	BACnetLimitEnable	-	O	-
Event_Enable	BACnetEventTransitionBits	-	O	-
Acked_Transitions	BACnetEventTransitionBits	-	O	-
Notify_Type	BACnetNotifyType	-	O	-
Event_Time_Stamps	BACnetArray[N] of BACnetTimeStamp	-	O	-
Profile_Name	CharacterString	-	O	-

NOTE
You can set the temperature scale in Celsius or Fahrenheit scale via DIP switches. More information in DIP switches (page 11).

7.1.3.25. UnoccupiedCoolSetPoint (Analog Value Object Type)

It indicates the setpoint when the room is unoccupied, the cool mode is selected, and the occupancy object is enabled.

NOTE
To know more, see Occupancy Function (page 54).

Property Identifier	Property Datatype	Value	ASHRAE	Gateway
Object_Identifier	BACnetObjectIdentifier	(Analog Value, 3)	R	R
Object_Name	CharacterString	UnoccupiedCoolSetPoint	R	R
Object_Type	BACnetObjectType	ANALOG_VALUE (2)	R	R
Present_Value	REAL	0 .. 65535	R	R/W
Description	CharacterString	-	O	-
Status_Flags	BACnetStatusFlags	{FALSE, FALSE, FALSE, FALSE}	R	R
Event_State	BACnetEventState	STATE_NORMAL (0)	R	R
Reliability	BACnetReliability	NO_FAULT_DETECTED (0)	O	R
Out_Of_Service	BOOLEAN	FALSE	R	R
Update_Interval	Unsigned	-	O	-
Units	BACnetEngineeringUnits	Degrees Celsius (62) Degrees Fahrenheit (64)	R	R
Min_Pres_Value	REAL	0	O	-
Max_Pres_Value	REAL	65535	O	-
Resolution	REAL	-	O	-
COV_Increment	REAL	0	O	W
Time_Delay	Unsigned	-	O	-
Notification_Class	Unsigned	-	O	-
High_Limit	REAL	-	O	-
Low_Limit	REAL	-	O	-
Deadband	REAL	-	O	-
Limit_Enable	BACnetLimitEnable	-	O	-
Event_Enable	BACnetEventTransitionBits	-	O	-
Acked_Transitions	BACnetEventTransitionBits	-	O	-
Notify_Type	BACnetNotifyType	-	O	-
Event_Time_Stamps	BACnetArray[N] of BACnetTimeStamp	-	O	-
Profile_Name	CharacterString	-	O	-

NOTE
You can set the temperature scale in Celsius or Fahrenheit scale via DIP switches. More information in DIP switches (page 11).

7.1.3.26. UnoccupiedHeatSetPoint (Analog Value Object Type)

It indicates the setpoint temperature when the room is unoccupied, the heat mode is selected, and the occupancy object is enabled.

NOTE
To know more, see Occupancy Function (page 54).

Property Identifier	Property Datatype	Value	ASHRAE	Gateway
Object_Identifier	BACnetObjectIdentifier	(Analog Value, 4)	R	R
Object_Name	CharacterString	UnoccupiedHeatSetPoint	R	R
Object_Type	BACnetObjectType	ANALOG_VALUE (2)	R	R
Present_Value	REAL	0 .. 65535	R	R/W
Description	CharacterString	-	O	-
Status_Flags	BACnetStatusFlags	{FALSE, FALSE, FALSE, FALSE}	R	R
Event_State	BACnetEventState	STATE_NORMAL (0)	R	R
Reliability	BACnetReliability	NO_FAULT_DETECTED (0)	O	R
Out_Of_Service	BOOLEAN	FALSE	R	R
Update_Interval	Unsigned	-	O	-
Units	BACnetEngineeringUnits	Degrees Celsius (62) Degrees Fahrenheit (64)	R	R
Min_Pres_Value	REAL	0	O	-
Max_Pres_Value	REAL	65535	O	-
Resolution	REAL	-	O	-
COV_Increment	REAL	0	O	W
Time_Delay	Unsigned	-	O	-
Notification_Class	Unsigned	-	O	-
High_Limit	REAL	-	O	-
Low_Limit	REAL	-	O	-
Deadband	REAL	-	O	-
Limit_Enable	BACnetLimitEnable	-	O	-
Event_Enable	BACnetEventTransitionBits	-	O	-
Acked_Transitions	BACnetEventTransitionBits	-	O	-
Notify_Type	BACnetNotifyType	-	O	-
Event_Time_Stamps	BACnetArray[N] of BACnetTimeStamp	-	O	-
Profile_Name	CharacterString	-	O	-

NOTE
You can set the temperature scale in Celsius or Fahrenheit scale via DIP switches. More information in DIP switches (page 11).

7.1.3.27. OccupancyContinuousCheck (Binary Value Object Type)

It indicates if the system is continuously checking the setpoint and occupancy conditions.

NOTE
To know more, see Occupancy Function (page 54).

Property Identifier	Property Datatype	Value	ASHRAE	Gateway
Object_Identifier	BACnetObjectIdentifier	(Binary Value, 0)	R	R
Object_Name	CharacterString	OccupancyContinuousCheck	R	R
Object_Type	BACnetObjectType	BINARY_VALUE (5)	R	R
Present_Value	BACnetBinaryPV	INACTIVE (0) / ACTIVE (1)	R	R/W
Description	CharacterString	-	O	-
Status_Flags	BACnetStatusFlags	{FALSE, FALSE, FALSE, FALSE}	R	R
Event_State	BACnetEventState	STATE_NORMAL (0)	R	R
Reliability	BACnetReliability	NO_FAULT_DETECTED (0)	O	R
Out_Of_Service	BOOLEAN	FALSE	R	R
Inactive_Text	CharacterString	Disabled	O	R
Active_Text	CharacterString	Enabled	O	R
Change_Of_State_Time	BACnetDatetime	-	O	-
Change_Of_State_Count	Unsigned	-	O	-
Time_Of_State_Count_Reset	BACnetDatetime	-	O	-
Elapsed_Active_Time	Unsigned	-	O	-
Time_Of_Active_Time_Reset	BACnetDatetime	-	O	-
Minimum_Off_Time	Unsigned32	-	O	-
Minimum_On_Time	Unsigned32	-	O	-
Priority_Array	BACnetPriorityArray	BACnetPriorityArray	R	-
Relinquish_Default	BACnetBinaryPV	INACTIVE (0)	R	-
Time_Delay	Unsigned	-	O	-
Notification_Class	Unsigned	-	O	-
Alarm_Value	BACnetBinaryPV	-	O	-
Event_Enable	BACnetEventTransitionBits	-	O	-
Acked_Transitions	BACnetEventTransitionBits	-	O	-
Notify_Type	BACnetNotifyType	-	O	-
Event_Time_Stamps	BACnetArray[N] of BACnetTimeStamp	-	O	-
Profile_Name	CharacterString	-	O	-

7.1.3.28. UnoccupiedDeadbandAction (Binary Value Object Type)

It indicates the action to be performed when Unoccupancy is enabled, and Room Temperature is within the deadband.

NOTE
To know more, see Occupancy Function (page 54).

Property Identifier	Property Datatype	Value	ASHRAE	Gateway
Object_Identifier	BACnetObjectIdentifier	(Binary Value, 1)	R	R
Object_Name	CharacterString	UnoccupiedDeadbandAction	R	R
Object_Type	BACnetObjectType	BINARY_VALUE (5)	R	R
Present_Value	BACnetBinaryPV	INACTIVE (0) / ACTIVE (1)	R	R/W
Description	CharacterString	-	O	-
Status_Flags	BACnetStatusFlags	{FALSE, FALSE, FALSE, FALSE}	R	R
Event_State	BACnetEventState	STATE_NORMAL (0)	R	R
Reliability	BACnetReliability	NO_FAULT_DETECTED (0)	O	R
Out_Of_Service	BOOLEAN	FALSE	R	R
Inactive_Text	CharacterString	Off	O	R
Active_Text	CharacterString	CurrentMode	O	R
Change_Of_State_Time	BACnetDatetime	-	O	-
Change_Of_State_Count	Unsigned	-	O	-
Time_Of_State_Count_Reset	BACnetDatetime	-	O	-
Elapsed_Active_Time	Unsigned	-	O	-
Time_Of_Active_Time_Reset	BACnetDatetime	-	O	-
Minimum_Off_Time	Unsigned32	-	O	-
Minimum_On_Time	Unsigned32	-	O	-
Priority_Array	BACnetPriorityArray	BACnetPriorityArray	R	-
Relinquish_Default	BACnetBinaryPV	INACTIVE (0)	R	-
Time_Delay	Unsigned	-	O	-
Notification_Class	Unsigned	-	O	-
Alarm_Value	BACnetBinaryPV	-	O	-
Event_Enable	BACnetEventTransitionBits	-	O	-
Acked_Transitions	BACnetEventTransitionBits	-	O	-
Notify_Type	BACnetNotifyType	-	O	-
Event_Time_Stamps	BACnetArray[N] of BACnetTimeStamp	-	O	-
Profile_Name	CharacterString	-	O	-

7.1.3.29. LockRemoteControl (Binary Value Object Type)

It is used to lock or unlock the AC remote controller.

Property Identifier	Property Datatype	Value	ASHRAE	Gateway
Object_Identifier	BACnetObjectIdentifier	(Binary Value, 2)	R	R
Object_Name	CharacterString	LockRemoteControl	R	R
Object_Type	BACnetObjectType	BINARY_VALUE (5)	R	R
Present_Value	BACnetBinaryPV	INACTIVE (0) / ACTIVE (1)	R	R/W
Description	CharacterString	-	O	-
Status_Flags	BACnetStatusFlags	{FALSE, FALSE, FALSE, FALSE}	R	R
Event_State	BACnetEventState	STATE_NORMAL (0)	R	R
Reliability	BACnetReliability	NO_FAULT_DETECTED (0)	O	R
Out_Of_Service	BOOLEAN	FALSE	R	R
Inactive_Text	CharacterString	Unlocked	O	R
Active_Text	CharacterString	Locked	O	R
Change_Of_State_Time	BACnetDatetime	-	O	-
Change_Of_State_Count	Unsigned	-	O	-
Time_Of_State_Count_Reset	BACnetDatetime	-	O	-
Elapsed_Active_Time	Unsigned	-	O	-
Time_Of_Active_Time_Reset	BACnetDatetime	-	O	-
Minimum_Off_Time	Unsigned32	-	O	-
Minimum_On_Time	Unsigned32	-	O	-
Priority_Array	BACnetPriorityArray	BACnetPriorityArray	R	-
Relinquish_Default	BACnetBinaryPV	INACTIVE (0)	R	-
Time_Delay	Unsigned	-	O	-
Notification_Class	Unsigned	-	O	-
Alarm_Value	BACnetBinaryPV	-	O	-
Event_Enable	BACnetEventTransitionBits	-	O	-
Acked_Transitions	BACnetEventTransitionBits	-	O	-
Notify_Type	BACnetNotifyType	-	O	-
Event_Time_Stamps	BACnetArray[N] of BACnetTimeStamp	-	O	-
Profile_Name	CharacterString	-	O	-

7.1.3.30. Humidification_status (Multistate Input Object Type)

It indicates the present humidification status.

Property Identifier	Property Datatype	Value	ASHRAE	IBOX
Object_Identifier	BACnetObjectIdentifier	(Multi-state Input, 8)	R	R
Object_Name	CharacterString	Humidification_status	R	R
Object_Type	BACnetObjectType	MULTISTATE_INPUT (13)	R	R
Present_Value	Unsigned	1 .. 5	R	R
Description	CharacterString	-	O	-
Device_Type	CharacterString	-	O	-
Status_Flags	BACnetStatusFlags	{FALSE, FALSE/TRUE, FALSE, FALSE}	R	R
Event_State	BACnetEventState	STATE_NORMAL (0)	R	R
Reliability	BACnetReliability	NO_FAULT_DETECTED (0), UNRELIABLE_OTHER (7)	O	R
Out_Of_Service	BOOLEAN	FALSE/TRUE	R	R
Number_Of_States	Unsigned	5	R	R
State_Text	BACnetArray[N] of CharacterString	Check the **Humidification status** table below	O	R
Time_Delay	Unsigned	-	O	-
Notification_Class	Unsigned	-	O	-
Alarm_Values	List of Unsigned	-	O	-
Fault_Values	List of Unsigned	-	O	-
Event_Enable	BACnetEventTransitionBits	-	O	-
Acked_Transitions	BACnetEventTransitionBits	-	O	-
Notify_Type	BACnetNotifyType	-	O	-
Event_Time_Stamps	BACnetArray[N] of BACnetTimeStamp	-	O	-
Profile_Name	CharacterString	-	O	-

Table 15. Humidification status

Present_Value	State_Text
1	Off
2	Low
3	Mid
4	High
5	Continuous

7.1.3.31. Humidification_command (Multistate Output Object Type)

It allows control over the humidification mode.

Property Identifier	Property Datatype	Value	ASHRAE	IBOX
Object_Identifier	BACnetObjectIdentifier	(Multi-state Output, 6)	R	R
Object_Name	CharacterString	Humidification_command	R	R
Object_Type	BACnetObjectType	MULTISTATE_OUTPUT (14)	R	R
Present_Value	Unsigned	1 .. 5	W	W
Description	CharacterString	-	O	-
Device_Type	CharacterString	-	O	-
Status_Flags	BACnetStatusFlags	{FALSE, FALSE, FALSE, TRUE/FALSE}	R	R
Event_State	BACnetEventState	STATE_NORMAL (0)	R	R
Reliability	BACnetReliability	NO_FAULT_DETECTED (0)	O	R
Out_Of_Service	BOOLEAN	FALSE/TRUE	R	R
Number_Of_States	Unsigned	5	R	R
State_Text	BACnetArray[N] of CharacterString	Check the **Humidification command** table below	O	R
Priority_Array	BACnetPriorityArray	-	R	R
Relinquish_Default	Unsigned	-	R	R
Time_Delay	Unsigned	-	O	-
Notification_Class	Unsigned	-	O	-
Feedback_Value	Unsigned	-	O	-
Event_Enable	BACnetEventTransitionBits	-	O	-
Acked_Transitions	BACnetEventTransitionBits	-	O	-
Notify_Type	BACnetNotifyType	-	O	-
Event_Time_Stamps	BACnetArray[N] of BACnetTimeStamp	-	O	-
Profile_Name	CharacterString	-	O	-

Table 16. Humidification command

Present_Value	State_Text
1	Off
2	Low
3	Mid
4	High
5	Continuous

7.1.3.32. OutdoorTemp_status (Analog Input Object Type)

It indicates the outdoor temperature from the outdoor unit sensor.

Property Identifier	Property Datatype	Value	ASHRAE	GATEWAY
Object_Identifier	BACnetObjectIdentifier	(Analog Input, 8)	R	R
Object_Name	CharacterString	OutdoorTemp_status	R	R
Object_Type	BACnetObjectType	ANALOG_INPUT (0)	R	R
Present_Value	REAL	10 .. 32°C / 50 .. 89.6°F	R	R
Description	CharacterString	-	O	-
Device_Type	CharacterString	-	O	-
Status_Flags	BACnetStatusFlags	{FALSE, FALSE/TRUE, FALSE, FALSE}	R	R
Event_State	BACnetEventState	STATE_NORMAL (0)	R	R
Reliability	BACnetReliability	NO_FAULT_DETECTED (0), UNRELIABLE_OTHER (7)	O	R
Out_Of_Service	BOOLEAN	FALSE	R	R
Update_Interval	Unsigned	-	O	-
Units	BACnetEngineeringUnits	Celsius degrees (62) Fahrenheit degrees (64)	R	R
Min_Pres_Value	REAL	10°C / 50°F	O	R
Max_Pres_Value	REAL	32°C / 89.67°F	O	R
Resolution	REAL	-	O	-
COV_Increment	REAL	0	O	W
Time_Delay	Unsigned	-	O	-
Notification_Class	Unsigned	-	O	-
High_Limit	REAL	-	O	-
Low_Limit	REAL	-	O	-
Deadband	REAL	-	O	-
Limit_Enable	BACnetLimitEnable	-	O	-
Event_Enable	BACnetEventTransitionBits	-	O	-
Acked_Transitions	BACnetEventTransitionBits	-	O	-
Notify_Type	BACnetNotifyType	-	O	-
Event_Time_Stamps	BACnetArray[N] of BACnetTimeStamp	-	O	-
Profile_Name	CharacterString	-	O	-

NOTE

You can set the temperature scale in Celsius or Fahrenheit via the DIP switches. More information in DIP switches (page 11).

7.1.3.33. DIP_SW_S1_status (Analog Input Object Type)

It indicates the status of the DIP switch block SW1 in decimal value. To get the status of each individual switch of SW1, just convert it to binary. The gateway reads this value only when booting up.

Property Identifier	Property Datatype	Value	ASHRAE	Gateway
Object_Identifier	BACnetObjectIdentifier	(Analog Input, 9)	R	R
Object_Name	CharacterString	DIP_SW_S1_status	R	R
Object_Type	BACnetObjectType	ANALOG_INPUT (0)	R	R
Present_Value	BACnetBinaryPV	0 .. 255	R	R
Description	CharacterString	-	O	-
Device_Type	CharacterString	-	O	-
Status_Flags	BACnetStatusFlags	{FALSE, FALSE, FALSE, FALSE}	R	R
Event_State	BACnetEventState	STATE_NORMAL (0)	R	R
Reliability	BACnetReliability	NO_FAULT_DETECTED (0)	O	R
Out_Of_Service	BOOLEAN	FALSE / TRUE	R	R
Change_Of_State_Time	BACnetDatetime	-	O	-
Change_Of_State_Count	Unsigned	-	O	-
Time_Of_State_Count_Reset	BACnetDatetime	-	O	-
Elapsed_Active_Time	Unsigned	-	O	-
Time_Of_Active_Time_Reset	BACnetDatetime	-	O	-
Time_Delay	Unsigned	-	O	-
Notification_Class	Unsigned	-	O	-
Alarm_Value	BACnetBinaryPV	-	O	-
Event_Enable	BACnetEventTransitionBits	-	O	-
Acked_Transitions	BACnetEventTransitionBits	-	O	-
Notify_Type	BACnetNotifyType	-	O	-
Event_Time_Stamps	BACnetArray[N] of BACnetTimeStamp	-	O	-
Profile_Name	CharacterString	-	O	-
Units	BACnetEngineeringUnits	No units (95)	R	R
COV_Increment	REAL	0	O	W

7.1.3.34. DIP_SW_S2_status (Analog Input Object Type)

It indicates the status of the DIP switch block SW2 in decimal value. To get the status of each individual switch of SW2, just convert it to binary. The gateway reads this value only when booting up.

Property Identifier	Property Datatype	Value	ASHRAE	Gateway
Object_Identifier	BACnetObjectIdentifier	(Analog Input, 10)	R	R
Object_Name	CharacterString	DIP_SW_S2_status	R	R
Object_Type	BACnetObjectType	ANALOG_INPUT (0)	R	R
Present_Value	BACnetBinaryPV	0 .. 255	R	R
Description	CharacterString	-	O	-
Device_Type	CharacterString	-	O	-
Status_Flags	BACnetStatusFlags	{FALSE, FALSE, FALSE, FALSE}	R	R
Event_State	BACnetEventState	STATE_NORMAL (0)	R	R
Reliability	BACnetReliability	NO_FAULT_DETECTED (0)	O	R
Out_Of_Service	BOOLEAN	FALSE / TRUE	R	R
Change_Of_State_Time	BACnetDatetime	-	O	-
Change_Of_State_Count	Unsigned	-	O	-
Time_Of_State_Count_Reset	BACnetDatetime	-	O	-
Elapsed_Active_Time	Unsigned	-	O	-
Time_Of_Active_Time_Reset	BACnetDatetime	-	O	-
Time_Delay	Unsigned	-	O	-
Notification_Class	Unsigned	-	O	-
Alarm_Value	BACnetBinaryPV	-	O	-
Event_Enable	BACnetEventTransitionBits	-	O	-
Acked_Transitions	BACnetEventTransitionBits	-	O	-
Notify_Type	BACnetNotifyType	-	O	-
Event_Time_Stamps	BACnetArray[N] of BACnetTimeStamp	-	O	-
Profile_Name	CharacterString	-	O	-
Units	BACnetEngineeringUnits	No units (95)	R	R
COV_Increment	REAL	0	O	W

7.1.3.35. SerialNumber (Analog Input Object Type)

It indicates the gateway's serial number: **000EXXXXX**

- 000E is a constant value and it's not included in the Present_Value property.
- XXXXX is a unique value for each gateway. This is the information the Present_Value provides.

Property Identifier	Property Datatype	Value	ASHRAE	Gateway
Object_Identifier	BACnetObjectIdentifier	(Analog Input, 11)	R	R
Object_Name	CharacterString	SerialNumber	R	R
Object_Type	BACnetObjectType	ANALOG_INPUT (0)	R	R
Present_Value	REAL	00000 .. 99999	R	R
Description	CharacterString	-	O	-
Device_Type	CharacterString	-	O	-
Status_Flags	BACnetStatusFlags	{FALSE, FALSE/TRUE, FALSE, FALSE}	R	R
Event_State	BACnetEventState	STATE_NORMAL (0)	R	R
Reliability	BACnetReliability	NO_FAULT_DETECTED (0) UNRELIABLE_OTHER (7)	O	R
Out_Of_Service	BOOLEAN	FALSE	R	R
Change_Of_State_Time	BACnetDatetime	-	O	-
Change_Of_State_Count	Unsigned	-	O	-
Time_Of_State_Count_Reset	BACnetDatetime	-	O	-
Elapsed_Active_Time	Unsigned	-	O	-
Time_Of_Active_Time_Reset	BACnetDatetime	-	O	-
Time_Delay	Unsigned	-	O	-
Notification_Class	Unsigned	-	O	-
Alarm_Value	BACnetBinaryPV	-	O	-
Event_Enable	BACnetEventTransitionBits	-	O	-
Acked_Transitions	BACnetEventTransitionBits	-	O	-
Notify_Type	BACnetNotifyType	-	O	-
Event_Time_Stamps	BACnetArray[N] ofBACnetTimeStamp	-	O	-
Profile_Name	CharacterString	-	O	-
Units	BACnetEngineeringUnits	No units (95)	R	R
COV_Increment	REAL	0	O	W

8. Occupancy Function

The Occupancy function determines the AC unit's behavior depending on the presence or absence of people in the room. This signal is processed directly in the Intesis gateway and has the capacity to modify three parameters of the AC system: Setpoint, Mode, and On/Off.

IMPORTANT
This function requires a presence sensor on the control system (BMS) side, which determines the state of the **Occupancy** object:

- **Occupied**: Someone is in the room.
- **Unoccupied**: No one is in the room.
- **Disabled**: The function is disabled

Besides the Occupancy object, and to adjust the settings of the Occupancy function, the gateway offers these BACnet objects:

- **Occupancy Cool Setpoint (OCS):** Setpoint temperature when the AC unit is in cool mode and someone is present in the room.
- **Unoccupancy Cool SetPoint (UCS):** Setpoint temperature when the AC unit is in cool mode and no one is in the room.
- **Occupancy Heat Setpoint (OHS):** Setpoint temperature when the AC unit is in heat mode and someone is present in the room.
- **Unoccupancy Heat SetPoint (UHS):** Setpoint temperature when the AC unit is in heat mode and no one is in the room.

Figure 3. Temperature setpoint objects related to the room's occupancy status and the AC unit's mode

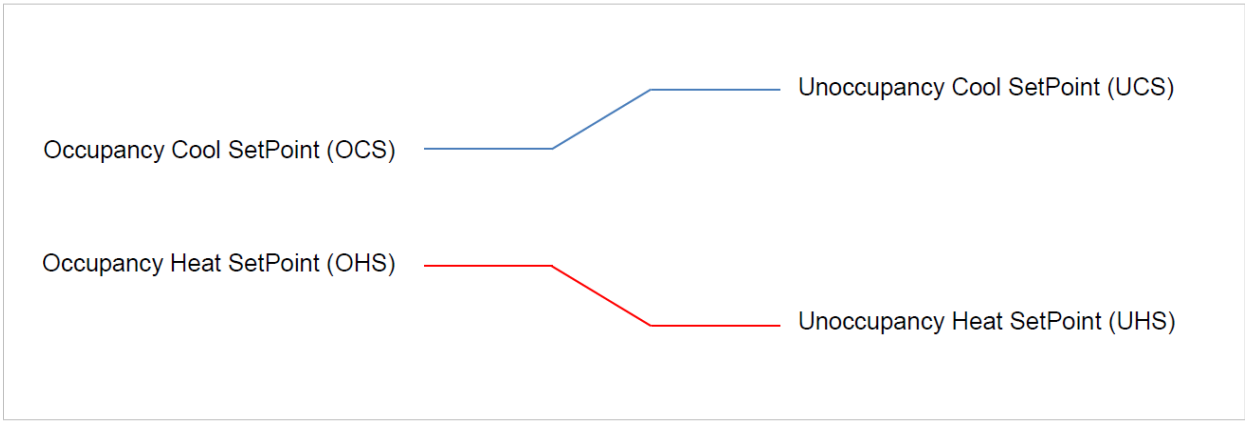

NOTICE
The minimum difference between Cool and Heat setpoints must be 2°C / 4°F.

- **Occupancy Continuous check:** It determines when the gateway checks the room occupancy:
  - If this object's value is 1 (active), the gateway checks the occupancy when the occupancy status and the room temperature change.

- If this object's value is 0 (inactive), the gateway only checks the occupancy when the occupancy status changes.

- **Unoccupied Deadband Action:** It determines the AC unit's behavior when the room is unoccupied and the ambient temperature is within the deadband.
  - If this object's value is 1 (active), the indoor unit will remain on.
  - If this object's value is 0 (inactive), the indoor unit will turn off.

When there is presence in the room, and according to the current room temperature, the AC unit's **mode, setpoint,** and **on/off** will be set to:

Condition	Setpoint	Mode	On/Off
Room temperature > OCS	Current OCS value	Cool	On
Room temperature < OHS	Current OCS value	Heat	On
OCS < Room temperature > OHS	OCS/OHS depending on the current mode (If Fan or Dry mode is active, no setpoint is sent)	Current mode	On

When there is no presence in the room, and according to the current room temperature, the AC unit's **mode, setpoint** and **on/of**f will be set to:

Condition	Setpoint	Mode	On/Off
Room temperature > OCS	Current UCS value	Cool	On
Room temperature < OHS	Current UHS value	Heat	On
OCS < Room temperature > OHS	UCS/UHS depending on the current mode (If Fan or Dry mode is active, no setpoint is sent)	Current mode	On (Deadband action=1)
			Off (Deadband action=0)

IMPORTANT
A local change in the Setpoint, Mode, or On/Off signal (for example, using a remote control) will disable the Occupancy function.

9. Virtual Temperature Function

Typically, the temperature sensor used by Daikin indoor units[1] to establish the temperature setpoint is placed inside the indoor unit itself. This may provoke a substantial difference between the temperature perceived by this sensor and the temperature perceived by the room occupants, especially if the indoor unit is mounted away, such as on a high ceiling or a distant wall.

NOTE
[1] Referring to the indoor units compatible with this IN485DAI001I000 gateway.

Figure 4. In this case, the room temperature is four degrees Celsius less than the temperature perceived by the indoor unit's sensor.

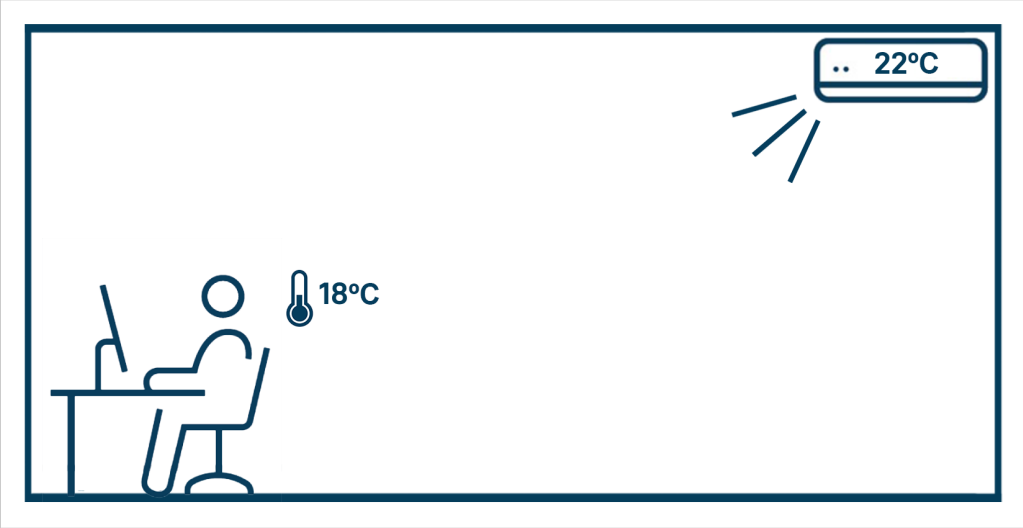

Also, Daikin AC systems don't allow the IN485DAI001I000 gateway to provide the reference temperature, i.e., to overwrite the value reported by the indoor unit's sensor, which is the value the AC system uses as the reference temperature.

To overcome these issues, this IN485DAI001I000 gateway implements the Virtual Temperature function.

With the Virtual Temperature function, the gateway uses the value reported by a temperature sensor from the BMS side, i.e., a sensor connected to the BACnet installation, to apply a formula that establishes the setpoint temperature for the indoor unit. This recalculated setpoint can effectively be sent to the AC system by the gateway to overwrite the AC system's reference temperature and, at the same time, it offsets the difference between the real temperature in the room and the temperature perceived by the indoor unit.

NOTICE
To use the value reported by the BMS side's sensor, the gateway implements the BACnet object **RoomTemperature_command (Analog Output)**.

To know more about all the objects dedicated to temperature settings, see Considerations on Temperature Signals (page 57).

HOW THE VIRTUAL TEMPERATURE FUNCTION WORKS

When the Virtual Temperature function is active, the gateway is constantly applying the following formula:

$S_{AC} = T_{AC} – (T_{BMS} – S_{BMS})$

Where:

- S_{AC}: Recalculated temperature setpoint sent to the indoor unit after the gateway applies the formula.
- T_{AC}: Indoor unit's reference temperature.
- T_{BMS}: Ambient temperature reported by the sensor connected to the BMS side.
- S_{BMS}: Temperature setpoint requested from the BMS side.

Once activated, the Virtual Temperature function recalculates the setpoint when any of these values change.

HOW TO ACTIVATE THE VIRTUAL TEMPERATURE FUNCTION

Follow this procedure:

1. Write the desired setpoint temperature in the **Setpoint_command** BACnet object.
2. Read the temperature value reported by a temperature sensor from the BMS side.
3. Write this value in the **RoomTemperature_command** BACnet object.

Once the gateway receives valid values for these objects, the Virtual Temperature function is automatically activated.

NOTE
When starting up the gateway, the **RoomTemperature_command**, which is the dedicated object to write the ambient temperature perceived from the BMS side, reports a value of -32768 (0x8000).

NOTICE
When starting up the gateway, the Present_Value property for the RoomTemperature_command object is 0, and the Reliability property displays **UNRELIABLE_OTHER (7)**. This means that no external temperature reference has been provided to the object, so the system is not applying the Virtual Temperature function. However, after receiving the first value, the Reliability property changes to **NO_FAULT_DETECTED (0)**. After that, any value can be used in the temperature range, including 0.

9.1. Considerations on Temperature Signals

NOTE
You can set the temperature signals in degrees Celsius or Fahrenheit via the DIP switch SW2. More information in DIP switches (page 11).

Table 17. Objects dedicated to temperature signals and to the Virtual Temperature function

BACnet object	Function when the Virtual Temperature function is inactive	Function when the Virtual Temperature function is active
Setpoint_status (Analog Input)	It indicates the temperature setpoint sent to the indoor unit. It will report the same value as the value introduced in the Setpoint_command object.	It indicates the recalculated temperature setpoint sent to the indoor unit after the gateway applies the $S_{AC} = T_{AC} – (T_{BMS} – S_{BMS})$ formula. It may report a value different from that introduced in the Setpoint_command object.

BACnet object	Function when the Virtual Temperature function is inactive	Function when the Virtual Temperature function is active
Setpoint_command (Analog Output)	It is used to request the temperature setpoint from the BMS side. It will report the same value as a wired remote controller connected to the indoor unit (if available).	It is used to request the temperature setpoint from the BMS side. It may report a value different from that reported by a wired remote controller connected to the indoor unit (if available).
RoomTemperature_status (Analog Input)	It indicates the ambient temperature perceived by the sensor from the AC system side (the sensor inside the indoor unit or inside the wired remote controller, if available).	It indicates the ambient temperature perceived by the sensor from the AC system side (the sensor inside the indoor unit or inside the wired remote controller, if available).
RoomTemperature_command (Analog Output)	It is used to activate the Virtual Temperature function by writing the value reported from a BMS side sensor.	It indicates the temperature reported from a BMS side sensor.
VirtualTemperatureActive (Binary Input)	It reports a value of 0	It reports a value of 1
UserSetpoint_status (Analog Input)	It indicates the temperature setpoint requested from the BMS side.	It indicates the original temperature setpoint requested from the BMS side.

VIRTUAL TEMPERATURE FUNCTION EXAMPLE CASE

We begin in a cold room (10°C) with an indoor unit mounted near the top of a high ceiling.

To raise the temperature to 20°C, we set this value in the BMS console using the BACnet object **Setpoint_command (Analog Output)**.

The same value of “20” is also reflected in the BACnet object **Setpoint_status (Analog Input)**.

A few minutes later, we check the BACnet object **RoomTemperature_status (Analog Input)** to determine the temperature reported by the indoor unit’s sensor, which reads 17°C.

However, in the room, there's a thermistor connected to the BMS, and better positioned than the indoor unit, that is reporting a temperature of 13°C.

Since the indoor unit does not allow the Intesis gateway to overwrite the ambient temperature directly, we can activate the Virtual Temperature function to offset the current temperature readings.

We write the temperature perceived by the BMS thermistor, which is "13", into the BACnet object **RoomTemperature_command (Analog Output)**.

As soon as we input this data, the BACnet object **VirtualTemperatureActive (Binary Input)** transitions from “0” to “1”, meaning that the Virtual Temperature function is now active and will continuously apply the formula to recalculate the setpoint temperature sent to the indoor unit.

At this moment, the formula values are:

17 - (13 - 20) = 24

Therefore, the Virtual Temperature function is currently sending a setpoint of 24°C to the indoor unit, and this value is reflected in the BACnet object **Setpoint_status (Analog Input)**.

A few minutes later, we check the BACnet object **RoomTemperature_command (Analog Output)** to consult the temperature perceived by the BMS sensor: 19°C.

At this point, the BACnet object **RoomTemperature_status (Analog Input)** is reporting 24°C, which is the indoor unit's current reference temperature.

Now, the formula applied by the Virtual Temperature function is based on these numbers:

24 - (19 - 20) = 25

This means that the Virtual Temperature function has established the setpoint at 25°C, and this value is reported in the BACnet object **Setpoint_status (Analog Input)**.

10. Error Codes

10.1. Gateway Codes

Error Code	Error in Remote Controller	Error Description
0	N/A	No active error
-1	N/A	Communication error between the AC unit and the gateway

10.2. AC System Codes

Error code	Error in the remote controller	Error category	Error description
16	A0	Indoor Unit	External protection devices activated
17	A1		Indoor unit PCB assembly failure
18	A2		Interlock error for fan
19	A3		Drain level system error
20	A4		Temperature of heat exchanger (1) error
21	A5		Temperature of heat exchanger (2) error
22	A6		Fan motor locked, overload, over current
23	A7		Swing flap motor error
24	A8		Overcurrent of AC input
25	A9		Electronic expansion valve drive error
26	AA		Heater overheat
27	AH		Dust collector error / No-maintenance filter error
29	AJ		Capacity setting error (indoor)
30	AE		Shortage of water supply
31	AF		Malfunctions of a humidifier system (water leaking)
32	C0		Malfunctions in a sensor system
35	C3		Sensor system of drain water error
36	C4		Heat exchanger (1) (Liquid pipe) thermistor system error
37	C5		Heat exchanger (1) (Gas pipe) thermistor system error
38	C6		Sensor system error of fan motor locked, overload
39	C7		Sensor system of swing flag motor error
40	C8		Sensor system of over-current of AC input
41	C9		Suction air thermistor error
42	CA		Discharge air thermistor system error
43	CH		Contamination sensor error
44	CC		Humidity sensor error
45	CJ		Remote control thermistor error
46	CE		Radiation sensor error
47	CF		High-pressure switch sensor
48	E0	Outdoor Unit	Protection devices activated
49	E1		Outdoor unit PCB assembly failure
51	E3		High pressure switch (HPS) activated
52	E4		Low-pressure switch (LPS) activated
53	E5		Overload of inverter compressor motor
54	E6		Over-current of STD compressor motor
55	E7		Overload of fan motor / Over current of fan motor
56	E8		Over-current of AC input

Error code	Error in the remote controller	Error category	Error description
57	E9		Electronic expansion valve drive error
58	EA		Four-way valve error
59	EH		Pump motor over current
60	EC		Water temperature abnormal
61	EJ		(Site installed) Protection device activated
62	EE		Malfunctions in a drain water
63	EF		Ice thermal storage unit error
64	H0		Malfunctions in a sensor system
65	H1		Air temperature thermistor error
66	H2		Sensor system of power supply error
67	H3		High Pressure switch is faulty
68	H4		Low pressure switch is faulty
69	H5		Compressor motor overload sensor is abnormal
70	H6		Compressor motor over current sensor is abnormal
71	H7		Overload or over current sensor of fan motor is abnormal
72	H8		Sensor system of over-current of AC input
73	H9		Outdoor air thermistor system error
74	HA		Discharge air thermistor system error
75	HH		Pump motor sensor system of overcurrent is abnormal
76	HC		Water temperature sensor system error
78	HE		Sensor system of drain water is abnormal
79	HF		Ice thermal storage unit error (alarm)
80	F0		No.1 and No.2 common protection device operates.
81	F1		No.1 protection device operates.
82	F2		No.2 protection device operates
83	F3		Discharge pipe temperature is abnormal
86	F6		Temperature of heat exchanger(1) abnormal
90	FA		Discharge pressure abnormal
91	FH		Oil temperature is abnormally high
92	FC		Suction pressure abnormal
94	FE		Oil pressure abnormal
95	FF		Oil level abnormal
96	J0		Sensor system error of refrigerant temperature
97	J1		Pressure sensor error
98	J2		Current sensor error
99	J3		Discharge pipe thermistor system error
100	J4		Low pressure equivalent saturated temperature sensor system error
101	J5		Suction pipe thermistor system error
102	J6		Heat exchanger(1) thermistor system error
103	J7		Heat exchanger(2) thermistor system error
104	J8		Oil equalizer pipe or liquid pipe thermistor system error
105	J9		Double tube heat exchanger outlet or gas pipe thermistor system error
106	JA		Discharge pipe pressure sensor error
107	JH		Oil temperature sensor error
108	JC		Suction pipe pressure sensor error
110	JE		Oil pressure sensor error
111	JF		Oil level sensor error
112	L0		Inverter system error
115	L3		Temperature rise in a switch box

Error code	Error in the remote controller	Error category	Error description
116	L4		Radiation fin (power transistor) temperature is too high
117	L5		Compressor motor grounded or short circuit, inverter PCB fault
118	L6		Compressor motor grounded or short circuit, inverter PCB fault
119	L7		Over-current of all inputs
120	L8		Compressor over current, compressor motor wire cut
121	L9		Stall prevention error (start-up error) Compressor locked, etc.
122	LA		Power transistor error
124	LC		Communication error between inverter and outdoor control unit
128	P0		Shortage of refrigerant (thermal storage unit)
129	P1		Power voltage imbalance, open phase
131	P3		Sensor error of temperature rise in a switch box
132	P4		Radiation fin temperature sensor error
133	P5		DC current sensor system error
134	P6		AC or DC output current sensor system error
135	P7		Total input current sensor error
141	PJ		Capacity setting error (outdoor)
144	U0	System	Low pressure drop due to insufficient refrigerant or electronic expansion valve error, etc.
145	U1		Reverse phase, Open phase
146	U2		Power voltage failure / Instantaneous power failure
147	U3		Failure to carry out check operation, transmission error
148	U4		Communication error between indoor unit and outdoor unit, communication error between outdoor unit and BS unit
149	U5		Communication error between remote control and indoor unit / Remote control board failure or setting error for remote control
150	U6		Communication error between indoor units
151	U7		Communication error between outdoor units / Communication error between outdoor unit and ice thermal storage unit
152	U8		Communication error between main and sub remote controllers (sub remote control error) / Combination error of other indoor unit / remote control in the same system (model)
153	U9		Communication error between other indoor unit and outdoor unit in the same system / Communication error between other BS unit and indoor/ outdoor unit
154	UA		Combination error of indoor/BS/outdoor unit (model, quantity, etc.), setting error of spare parts PCB when replaced
155	UH		Improper connection of transmission wiring between outdoor and outdoor unit outside control adaptor
156	UC		Centralized address duplicated
157	UJ		Attached equipment transmission error
158	UE		Communication error between indoor unit and centralized control device
159	UF		Failure to carry out check operation Indoor-outdoor, outdoor-outdoor communication error, etc.
208	60	Others	All system error
209	61		PC board error
210	62		Ozone density abnormal
211	63		Contamination sensor error
212	64		Indoor air thermistor system error
213	65		Outdoor air thermistor system error
216	68		HVU error (Venti air dust-collecting unit)
218	6A		Dumper system error
219	6H		Door switch error
220	6C		Replace the humidity element

Error code	Error in the remote controller	Error category	Error description
221	6J		Replace the high-efficiency filter
222	6E		Replace the deodorization catalyst
223	6F		Simplified remote controller error
225	51		Fan motor of supply air over current or overload
226	52		Fan motor of return air over current / Fan motor of return air overload
227	53		Inverter system error (supply air side)
228	54		Inverter system error (return air side)
240	40		Humidifying valve error
241	41		Chilled water valve error
242	42		Hot water valve error
243	43		Heat exchanger of chilled water error
244	44		Heat exchanger of hot water error
257	31		The humidity sensor of return air sensor
258	32		Outdoor air humidity sensor error
259	33		Supply air temperature sensor error
260	34		Return air temperature sensor error
261	35		Outdoor air temperature sensor error
262	36		Remote controller temperature sensor error
266	3A		Water leakage sensor 1 error
267	3H		Water leakage sensor 2 error
268	3C		Dew condensation error
338	M2		Centralized remote controller PCB error
344	M8		Communication error between centralized remote control devices
346	MA		Centralized remote control devices inappropriate combination
348	MC		Centralized remote controller address setting error
Any other	UNKNOWN		UNKNOWN

NOTE
If you detect a non-listed error code, please contact Daikin technical support.