ENGLISH

IN485DAI001R000 GATEWAY

Daikin Sky and VRV Systems to BACnet MS/TP and Modbus RTU

USER MANUAL
Version 1.0.19
Publication date 2025-10-20

14 rue Edouard Petit
42000 St-Etienne
Tel : +33 477 92 03 56
Email : contact@rg2i.com
www.rg2i.com

Copyright © 2025 Intesis

Disclaimer

The information in this document is for informational purposes only. Please inform HMS Networks of any inaccuracies or omissions found in this document. HMS Networks disclaims any responsibility or liability for any errors that may appear in this document.

HMS Networks reserves the right to modify its products in line with its policy of continuous product development. The information in this document shall therefore not be construed as a commitment on the part of HMS Networks and is subject to change without notice. HMS Networks makes no commitment to update or keep current the information in this document.

The data, examples and illustrations found in this document are included for illustrative purposes and are only intended to help improve understanding of the functionality and handling of the product. In view of the wide range of possible applications of the product, and because of the many variables and requirements associated with any particular implementation, HMS Networks cannot assume responsibility or liability for actual use based on the data, examples or illustrations included in this document nor for any damages incurred during installation of the product. Those responsible for the use of the product must acquire sufficient knowledge in order to ensure that the product is used correctly in their specific application and that the application meets all performance and safety requirements including any applicable laws, regulations, codes and standards. Further, HMS Networks will under no circumstances assume liability or responsibility for any problems that may arise as a result from the use of undocumented features or functional side effects found outside the documented scope of the product. The effects caused by any direct or indirect use of such aspects of the product are undefined and may include e.g. compatibility issues and stability issues.

Table of Contents

1. Description, Compatible AC systems, and Order Codes 1

2. General Information 2

2.1. Intended Use of the User Manual 2
2.2. General Safety Information 2
2.3. Admonition Messages and Symbols 3

3. Quickstart Guide for the IN485DAI001R000 Gateway 4

4. Overview 5

4.1. Inside the Package 6
4.2. Main Features 6
4.3. Gateway Capacity 6
4.4. General Functionality 6

5. Hardware 7

5.1. Mounting 7
5.2. Connection Procedure 8
5.3. Coexistence of the Gateway with a Remote Controller 10
5.4. Connection to an External Power Supply 11
5.5. DIP Switches 12
5.6. LED Indicators 14
5.7. Technical Specifications 15
5.8. Dimensions 15

6. Restore the Factory Settings 16

7. BACnet Specifications 17

7.1. Objects 17
7.1.1. Supported Object Types 17
7.1.2. Member Objects 17
7.1.2.1. Type: Gateway 17
7.1.2.2. Type: Indoor Unit 17
7.1.2.3. Available Functionalities Depending on the Operation Mode 18
7.1.3. Objects and Properties 18
7.1.3.1. Daikin AC Gateway (Device Object Type) 18
7.1.3.2. OnOff_status (Binary Input Object Type) 20
7.1.3.3. OnOff_command (Binary Output Object Type) 21
7.1.3.4. Mode_status (Multistate Input Object Type) 22
7.1.3.5. Mode_command (Multistate Output Object Type) 23
7.1.3.6. Setpoint_status (Analog Input Object Type) 24
7.1.3.7. UserSetpoint_status (Analog Input Object Type) 25
7.1.3.8. Setpoint_command (Analog Output Object Type) 26
7.1.3.9. VirtualTempActive (Binary Input Object Type) 27
7.1.3.10. FanSpeed_status (Multistate Input Object Type) 28
7.1.3.11. FanSpeed_command (Multistate Output Object Type) 29
7.1.3.12. AirDirectionUD_status (Multistate Input Object Type) 30
7.1.3.13. AirDirectionUD_command (Multistate Output Object Type) 31
7.1.3.14. AirDirectionLR_status (Multistate Input Object Type) 32
7.1.3.15. AirDirectionLR_command (Multi-state Output Object Type) 33
7.1.3.16. RoomTemperature_status (Analog Input Object Type) 34
7.1.3.17. RoomTemperature_command (Analog Output Object Type) 35
7.1.3.18. ErrorCode (Analog Input Object Type) 36

7.1.3.19. ErrorCodeM (Multistate Input Object Type) 37
7.1.3.20. ErrorActive (Binary Input Object Type) 38
7.1.3.21. ErrorAddress (Analog Input Object Type) 39
7.1.3.22. OnTimeCounter (Analog Value Object Type) 40
7.1.3.23. FilterSign (Binary Input Object Type) 41
7.1.3.24. FilterReset (Binary Output Object Type) 42
7.1.3.25. Occupancy (Multistate Value Object Type) 43
7.1.3.26. OccupiedCoolSetPoint (Analog Value Object Type) 44
7.1.3.27. OccupiedHeatSetPoint (Analog Value Object Type) 45
7.1.3.28. UnoccupiedCoolSetPoint (Analog Value Object Type) 46
7.1.3.29. UnoccupiedHeatSetPoint (Analog Value Object Type) 47
7.1.3.30. OccupancyContinuousCheck (Binary Value Object Type) 48
7.1.3.31. UnoccupiedDeadbandAction (Binary Value Object Type) 49
7.1.3.32. LockRemoteControl (Binary Value Object Type) 50
7.1.3.33. ThermostatON (Binary Input Object Type) 51
7.1.3.34. DIP_SW_S1_status (Analog Input Object Type) 52
7.1.3.35. DIP_SW_S2_status (Analog Input Object Type) 53
7.1.3.36. SerialNumber (Analog Input Object Type) 54
7.1.3.37. WaitInit_as_Master (Analog Value Object Type) 55
7.1.3.38. Indoor_Unit_Operation_Mode_Role (Multistate Input Object Type) 56
7.1.3.39. FilterSignAddress (Analog Input Object Type) 57
7.1.3.40. AC IU address (Multistate Value Object Type) 58
7.1.3.41. Number_of_IU_Connected (Analog Input Object Type) 59
7.2. Occupancy Function 60

8. Modbus Specifications 62
8.1. Implemented Modbus Functions 62
8.1.1. Modbus Physical Layer 62
8.2. Modbus Registers 62
8.2.1. Available Functionalities Depending on the Operation Mode 67

9. Ambient Temperature and Virtual Temperature Function 68
9.1. Considerations on Temperature Signals 72

10. Error Codes 74
10.1. Gateway Codes 74
10.2. AC System Codes 74

1. Description, Compatible AC systems, and Order Codes

BACnet MS/TP and Modbus RTU gateway for Daikin air conditioners.

Compatible with Sky and VRV air conditioning systems commercialized by Daikin.

Use the compatibility tool to get a complete list of compatible units: https://compatibility.intesis.com/

ORDER CODE	LEGACY ORDER CODE
IN485DAI001R000	INMBSDAI001R000 INBACDAI001R100

2. General Information

2.1. Intended Use of the User Manual

This manual contains the main features of this Intesis gateway and the instructions for its appropriate installation, configuration, and operation.

Any person who installs, configures, or operates this gateway or any associated equipment should be aware of this manual's contents.

Keep this manual for future reference during the installation, configuration, and operation.

2.2. General Safety Information

IMPORTANT
Follow these instructions carefully. Improper work may seriously harm your health and damage the gateway and/or any other equipment connected to it.

Only technical personnel, following these instructions and the country legislation for installing electrical equipment, can install and manipulate this gateway.

Install this gateway indoors, in a restricted access location, avoiding exposure to direct solar radiation, water, high relative humidity, or dust.

Preferably, mount this gateway on a DIN rail inside a grounded metallic cabinet, following the instructions in this manual.

If mounting on a wall, firmly fix this gateway on a non-vibrating surface, following the instructions in this manual.

Connect this gateway only to networks without routing to the outside plant.

All communication ports are considered for indoor use and must only be connected to SELV circuits.

Disconnect all systems from power before manipulating and connecting them to the gateway.

Use SELV-rated NEC class 2 or limited power source (LPS) power supply.

Use a circuit breaker between the gateway and the power supply. Rating: 250 V, 6 A.

Supply the correct voltage to power the gateway. The admitted range is detailed in the technical specifications table.

Respect the expected polarity of power and communication cables when connecting them to the gateway.

This Intesis gateway is designed for installation in an enclosure. When the device is mounted outside an enclosure, precautions should be taken to avoid electrostatic discharges to the unit in environments with static levels above 4 kV. When working in an enclosure (e.g., making adjustments, setting switches, etc.), typical anti-static precautions should be observed before touching the unit.

Binary inputs, if present, are potential-free contact. Do not connect any voltage.

Safety instructions in other languages can be found here.

2.3. Admonition Messages and Symbols

CAUTION
Instruction that must be followed to avoid a potentially hazardous situation that, if not avoided, could result in minor or moderate injury.

IMPORTANT
Instruction that must be followed to avoid a risk of reduced functionality and/or damage to the equipment or to avoid a network security risk.

NOTE
Additional information which may facilitate installation and/or operation.

TIP
Helpful advice and suggestions.

NOTICE
Remarkable Information.

3. Quickstart Guide for the IN485DAI001R000 Gateway

CAUTION
Disconnect all systems from power before connecting them to the gateway.

1. Mount the gateway in the desired installation site. This gateway can be mounted over a DIN rail or a wall. See details in Mounting (page 7).

   NOTE
   DIN rail mounting inside a grounded cabinet or metal enclosure is recommended.

2. Connect the gateway to the BACnet/Modbus network via its **EIA-485** port.
3. Connect the gateway to the wired remote controller bus (P1P2). See details in Connection Procedure (page 8).
4. Configure the gateway using the built-in DIP switches. See details in DIP Switches (page 12).

   NOTE
   Use the SW1-5 (DIP switch 1, position 5) to set the gateway as a BACnet or Modbus server device:

   - BACnet MS/TP: Position 5 is off (down). This is the default setting.
   - Modbus RTU: Position 5 is on (up).

5. Check the communication performance between the BACnet/Modbus bus and the AC system through the gateway's LED indicators. See details in LED Indicators (page 14).
6. The Intesis gateway is ready to be used in your system.

POWER SUPPLY
With some exceptions, there is usually no need for an external power supply. See Connection to an External Power Supply (page 11).

4. Overview

NOTE
You can set the IN485DAI001R000 as a BACnet MS/TP or a Modbus RTU server gateway using the SW1-5 (DIP switch 1, position 5). See DIP Switches (page 12).

Figure 1. Integration of Daikin AC units into a BACnet MS/TP installation using the Intesis IN485DAI001R000 gateway.

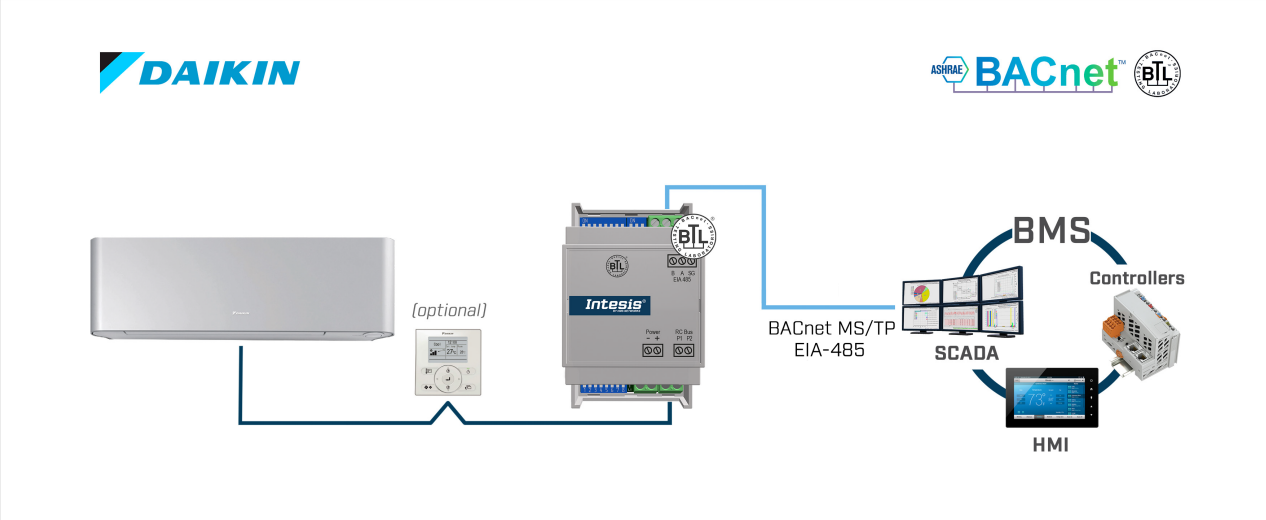

Figure 2. Integration of Daikin AC units into a Modbus RTU installation using the Intesis IN485DAI001R000 gateway.

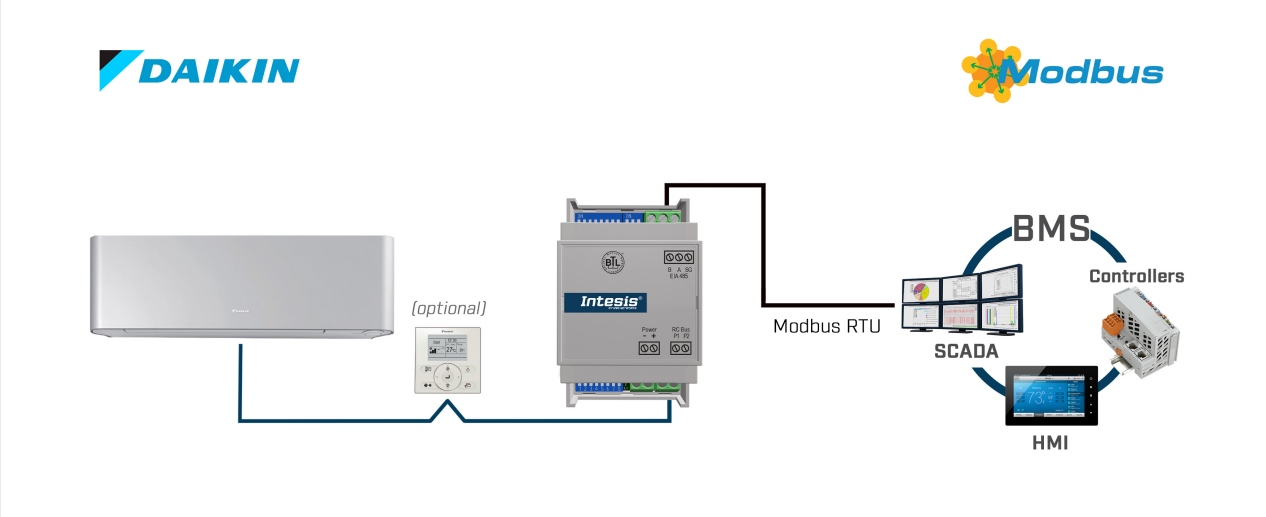

NOTE
This document assumes the user is familiar with BACnet, Modbus, and Daikin technologies, including their associated technical terminology.

4.1. Inside the Package

Items included:

- Intesis IN485DAI001R000 gateway
- Installation Guide

4.2. Main Features

- BTL mark ensures full interoperability with BACnet devices.
- Supports BACnet MS/TP and Modbus RTU.
- Configuration with onboard DIP switches.
- Quick and easy installation: Set the DIP switches, plug, and play.
- External power supply not required.
- Simultaneous control of the AC unit via both the remote controller and the BMS (BACnet MS/TP or Modbus RTU).
- Reduced dimensions (HxWxD): 93 x 53 x 58 mm / 3.7 x 2.1 x 2.3”.
- Mountable on DIN rail, wall, or even inside the indoor unit in some models of AC.
- Total control and monitoring of the AC unit from the BACnet or Modbus system, including the AC unit’s internal variables, running hours counter (for filter maintenance control), and error indication, among many other functions.
- Significant reduction of the HVAC system energy consumption.
- Three-year warranty.

4.3. Gateway Capacity

This Intesis gateway can integrate one or more Daikin AC indoor units and their associated elements.

NOTE
You can connect several AC indoor units to the gateway, but they will perform as one. This means you cannot send different commands to different units.

4.4. General Functionality

With this Intesis IN485DAI001R000 gateway, you can easily integrate Daikin Sky and VRV air conditioning systems into a system based on BACnet MS/TP or Modbus RTU. To do so, the gateway acts as a server device of the installation itself, accessing all signals from the AC indoor unit.

The gateway is continuously polling the AC unit, storing in its memory the current status of every signal you want to track and serving this data to the control system when requested. The gateway also sends the requested commands to the indoor unit.

5. Hardware

5.1. Mounting

Mount the gateway over a wall or over a DIN rail.

IMPORTANT
Leave enough clear space to wire the gateway easily and for the subsequent manipulation of elements such as connectors, DIP switches, etc.

IMPORTANT
Do not mount the gateway in air-handling units or conducts.

NOTE
DIN rail mounting inside a grounded metallic cabinet is recommended.

DIN rail mounting

Keep the clips in their original position.

1. Fit the gateway's top-side clip in the upper edge of the DIN rail.
2. Press the low side of the gateway gently to lock it in the DIN rail.
3. Make sure the gateway is firmly fixed.

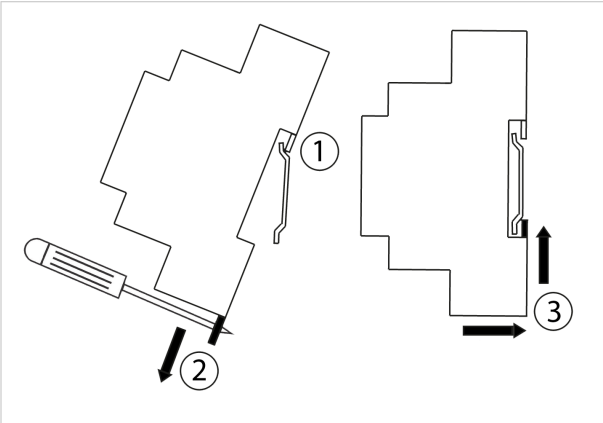

NOTE
For some DIN rails, to complete step 2, you may need a small screwdriver or similar to pull the bottom clip down.

Wall mounting

1. Press the rear panel clips outwards until you hear a *click*.
2. Use the clip holes to screw the gateway to the wall.
3. Make sure the gateway is firmly fixed.

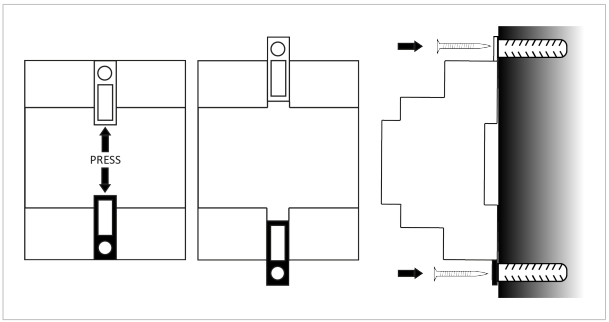

5.2. Connection Procedure

CAUTION
Disconnect all systems from power before connecting them to the gateway.

IMPORTANT
Keep communication cables as far away as possible from power and ground cables. Never bundle them together.

NOTE
Mount the gateway in the desired place before wiring it.

Figure 3. Wiring diagram

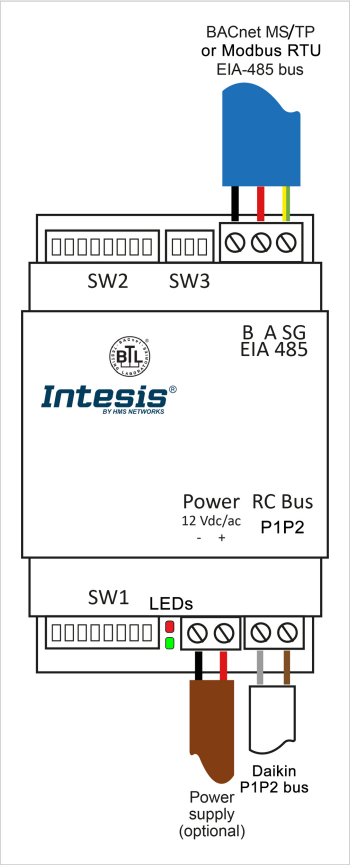

Connection to the wired remote controller (RC) bus

1. Connect the gateway at any point of the P1P2 bus.

NOTE

- The P1P2 bus is a two-wire bus used to connect the indoor unit and a wired RC .
- This connection has no specific polarity.
- The maximum length for the RC bus is 500 m (1640,42 ft).

Connecting the gateway to the BACnet MS/TP or Modbus RTU bus

2. Connect the BACnet MS/TP or Modbus RTU bus to the EIA-485 port of the gateway.

IMPORTANT
Observe polarity: B-, A+, and SG for signal ground.

IMPORTANT

- EIA-485 bus doesn't allow loop or star topologies.
- Maximum length for the EIA-485 bus is 1200 meters (4000 feet).

EIA-485 BUS TERMINATION AND FAIL-SAFE BIASING
The EIA-485 bus requires a 120 Ω termination resistor at each end to avoid signal reflections.

When all transmitters are in high impedance (three-state), a fail-safe biasing mechanism is needed to maintain a valid voltage level and avoid false fail status detections.

The IN485DAI001R000 gateway includes an on-board termination resistor of 120 Ω that can be connected to the EIA-485 bus by using DIP switch SW3.

- **SW3, Position 1:**
  ON: 120 Ω termination active.
  OFF: 120 Ω termination inactive (default position).

Some BACnet MS/TP / Modbus RTU EIA-485 Master devices may also include internal termination and/or fail-safe biasing. Always check the Master device’s documentation.

If the gateway is installed at one end of the bus and termination is enabled, do not add another resistor at that end.

To know more, refer to the document Polarity Issues in RS485 Networks.

3. Reconnect all systems to power.

5.3. Coexistence of the Gateway with a Remote Controller

If there is a wired remote controller (RC) connected to the indoor unit, you must set the roles for both the wired RC and the gateway:

- Set the wired RC as the header[1] and the gateway as the follower[1].
- Set the wired RC as the follower and the gateway as the header.

NOTE
[1] We use the terms header and follower to designate the roles also known as master and slave or main and sub.

NOTE
By default, the factory settings designate the gateway as the follower. Use the SW1-1 (DIP switch 1, position 1) to configure the gateway's role. See DIP Switches (page 12).

NOTE
Refer to the documentation provided with the Daikin indoor unit to know the needed procedure to set the role of the wired RC.

IMPORTANT
If no wired RC is present in the installation, set the gateway as the header.

NOTE
Although it is not mandatory, we recommend connecting a wired RC in the bus since it may be necessary to establish proper communication between the gateway and some indoor units.

IMPORTANT
The roles of the gateway and the wired RC affect certain functions, such as using a temperature sensor from the BMS side or the Virtual Temperature function. To know more, see Ambient Temperature and Virtual Temperature Function (page 68).

DAIKIN IR WIRELESS REMOTE CONTROLLER
In the case of using a Daikin IR wireless remote controller, set it as the follower and the gateway as the header. If you set the IR wireless remote controller as the header, some features from the BMS side will not be available.

5.4. Connection to an External Power Supply

IMPORTANT
In most cases, this gateway is powered through the remote controller bus itself, and there is no need to connect an external power supply. However, depending on the number and type of remote controllers installed, the bus could not supply the needed power.

TIP
Some signs indicating there is not enough power in the bus may include, for example, a malfunction of the remote controllers' display or in its performance.

If that's the case, connect a 12 VDC/AC SELV-rated NEC class 2 or Limited Power Source (LPS) power supply in the gateway's Power connector.

IMPORTANT
Respect polarity.

Figure 4. Power connector

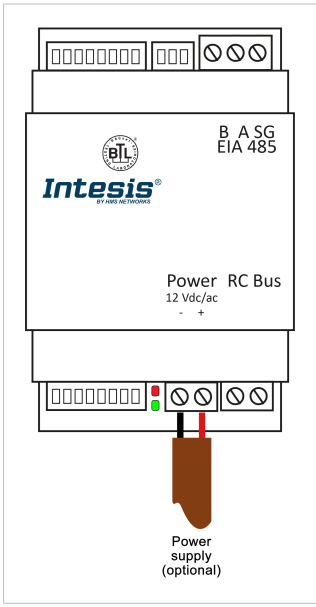

5.5. DIP Switches

The gateway features three DIP switches: SW1 (8 switches) at the bottom and SW2 (8 switches) and SW3 (3 switches) at the top.

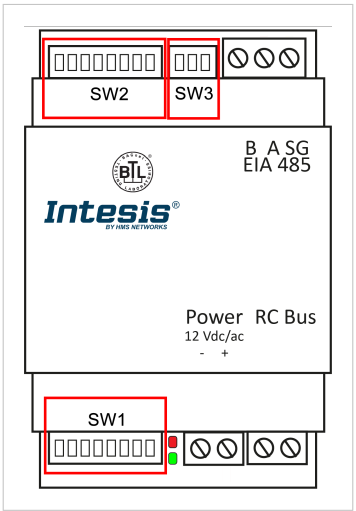

*Table 1. **SW1** (P1, P2, P5): Gateway configuration; (P6 to P8): BACnet MS/TP or Modbus RTU baudrate*

Position								Description	
1	**2**	**3**	**4**	**5**	**6**	**7**	**8**	**BACnet**	**Modbus**
OFF	X	X	X	X	X	X	X	Follower in RC bus (default)	
ON	X	X	X	X	X	X	X	Header in RC bus	
X	OFF	X	X	X	X	X	X	Temperature reading from the IU (default)	
X	ON	X	X	X	X	X	X	Temperature reading from the wired RC	
X	X	X	X	OFF	X	X	X	Gateway set for BACnet MS/TP (default)	
X	X	X	X	ON	X	X	X	Gateway set for Modbus RTU	
X	X	X	X	X	OFF	OFF	OFF	Autobaudrate (default)	2400 bps
X	X	X	X	X	ON	OFF	OFF	9600 bps	4800 bps
X	X	X	X	X	OFF	ON	OFF	19200 bps	9600 bps
X	X	X	X	X	ON	ON	OFF	38400 bps	19200 bps
X	X	X	X	X	OFF	OFF	ON	57600 bps	38400 bps
X	X	X	X	X	ON	OFF	ON	76800 bps	57600 bps
X	X	X	X	X	OFF	ON	ON	115200 bps	76800 bps
X	X	X	X	X	ON	ON	ON	Autobaudrate	115200 bps

BACNET MS/TP ONLY:
When **Autobaudrate** is selected, the gateway scans the network to find other BACnet MS/TP devices and match their baud rate. Once detected, the baud rate will only be modified after a reset/reboot of the gateway.

Table 2. ***SW2 (BACnet MS/TP)*** *(P1 to P7): BACnet MS/TP MAC address; (P8): Temperature unit (°C/°F)*

Position								BACnet address	Description
1	2	3	4	5	6	7	8		
OFF	OFF	OFF	OFF	OFF	OFF	OFF	X	0	-
ON	OFF	OFF	OFF	OFF	OFF	OFF	X	1	-
OFF	ON	OFF	OFF	OFF	OFF	OFF	X	2	-
ON	ON	OFF	OFF	OFF	OFF	OFF	X	3	-
...								...	-
ON	OFF	ON	ON	ON	ON	ON	X	125	-
OFF	ON	ON	ON	ON	ON	ON	X	126	-
ON	ON	ON	ON	ON	ON	ON	X	127	-
X	X	X	X	X	X	X	OFF	-	Temp. in °C (default)
X	X	X	X	X	X	X	ON	-	Temp. in °F

Table 3. ***SW2 (Modbus RTU)*** *(P1 to P6): Modbus server address; (P7): Degree decimals setting; (P8): Temperature unit (°C/°F)*

Position								Modbus address	Description
1	2	3	4	5	6	7	8		
ON	OFF	OFF	OFF	OFF	OFF	X	X	1	-
OFF	ON	OFF	OFF	OFF	OFF	X	X	2	-
ON	ON	OFF	OFF	OFF	OFF	X	X	3	-
...								...	-
ON	OFF	ON	ON	ON	ON	X	X	61	-
OFF	ON	ON	ON	ON	ON	X	X	62	-
ON	ON	ON	ON	ON	ON	X	X	63	-
X	X	X	X	X	X	OFF	X	-	Temp. in degrees x1 (default)
X	X	X	X	X	X	ON	X	-	Temp. in degrees x10. Example: 19.2°=192
X	X	X	X	X	X	X	OFF	-	Temp. in °C (default)
X	X	X	X	X	X	X	ON	-	Temp. in °F

Table 4. ***SW3*** *(P1 to P3): BACnet/Modbus polarization and termination resistor*

Position			Description
1	2	3	
OFF	X	X	EIA-485 bus without termination resistor. The gateway is not at one end of the EIA-485 bus (default value)
ON	X	X	120 Ω termination resistor active. The gateway is at one end of the EIA-485 bus
X	OFF	OFF	No bus polarization (default value)
X	ON	ON	Bus polarization active

IMPORTANT
Observe the **ON** indicator on each DIP switch as a reference.

IMPORTANT
The DIP switches configuration will only take effect after rebooting the gateway.

5.6. LED Indicators

There are two LEDs at the lower side of the gateway, between the DIP switch block SW1 and the **Power** connector.

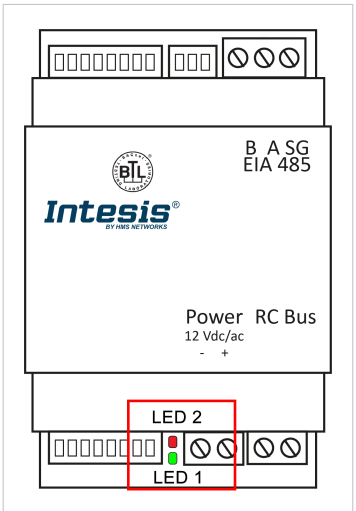

When powering the gateway up, both LEDs blink once and then turn off. After that, LEDs will behave as described in the table below:

LED	Status	Description
When the gateway is set for BACnet MS/TP		
L1 Green	ON	EIA-485 bus link performed
	Flickering	Activity on the EIA-485 bus
	OFF	EIA-485 bus link not performed
L2 Red	ON	AC communication error
	Blinking	AC unit error
	Flashing	AC communication OK
When the gateway is set for Modbus RTU		
L1 Green	Blinking	Communication error Any error in the AC unit
	Flashing	Normal operation
L1 Green + L2 Red	Pulse	Gateway startup

LED PATTERNS

- **ON**: 100% on
- **Flickering**: irregular cycle (90% on - 10% off approx)
- **Blinking**: 50% on - 50% off
- **Flashing**: 10% on - 90% off
- **OFF**: 100% off
- **Pulse**: 5 seconds on - then off

5.7. Technical Specifications

Housing	Plastic, type PC (UL 94 V-0) Net dimensions (HxWxD): 93 x 53 x 58 mm / 3.7 x 2.1 x 2.3” Color: Light grey. RAL 7035
Net weight	85 g (3 oz)
Terminal wiring	Wire cross-section/gauge per terminal: One core: 0.2 .. 2.5 mm^2 (24 .. 11 AWG) Two cores: 0.2 .. 1.5mm^2 (24 .. 15 AWG) Three cores: Not permitted Use solid or stranded wires (twisted or with ferrule).
External power supply (optional)	SELV-rated NEC class 2 or limited power source (LPS) power supply 12 VDC/AC; 0.1 A
Mounting	Wall, DIN rail, or inside the indoor unit
EIA-485 port **BACnet MS/TP - Modbus RTU**	1 x pluggable terminal block (3 poles: B, A, and SG)
AC unit port	1 x RC bus pluggable terminal block (2 poles)
LED indicators	2 x Communication status
DIP switches	SW1: Gateway and baud rate configuration SW2: BACnet/Modbus address and temperature unit SW3: Bus polarization and termination
Operational temperature	0 to +70°C / 32 to 158°F
Storage temperature	-20 to 85°C / -4 to 185°F
Operational and storage humidity	5% to 95% RH non-condensing
Isolation between comm. ports	1000 VDC

5.8. Dimensions

Net dimensions (HxWxD):
Millimeters: 93 x 53 x 58 mm
Inches: 3.66 x 2.08 x 2.28"

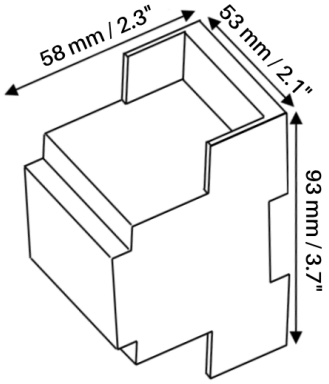

IMPORTANT
Leave enough clear space to wire the gateway easily and for the subsequent manipulation of elements such as connectors, DIP switches, etc.

6. Restore the Factory Settings

To restore the gateway to its factory settings, proceed as follows:

1. Set all switches from DIP switches SW1 and SW2 to **ON**.
2. Reboot the gateway:
   a. Power it OFF.
   b. Power it ON.

   NOTE
   To power the gateway OFF, disconnect it from the AC unit and from the power supply, if there is one. To power the gateway ON, reestablish those connections.

3. After the reboot, LEDs will blink with the SOS Morse sequence:
   a. Three short blinks
   b. Three longer blinks
   c. Three short blinks
4. Set all switches from DIP switches SW1 and SW2 to **OFF** within 30 seconds.

   IMPORTANT
   If you take longer than 30 seconds, all LEDs will turn off, meaning that the procedure has failed. To retry it, go to step 1 and begin the procedure again.

After this procedure, the LED will flash red, meaning that the gateway has been restored to the factory settings.

7. BACnet Specifications

The following sections provide the gateway's specifications when it is set for BACnet MS/TP.

7.1. Objects

7.1.1. Supported Object Types

Object type	ID
Analog-Input	0
Analog-Output	1
Analog-Value	2
Binary-Input	3
Binary-Output	4
Binary-Value	5
Device	8
Multistate-Input	13
Multistate-Output	14
Multistate-Value	19

7.1.2. Member Objects

7.1.2.1. Type: Gateway

Object name	Description	Object type	Object instance
IN485DAI001R000	Daikin RC gateway	8: Device	246000 (default)

7.1.2.2. Type: Indoor Unit

Object name	Object type	Object instance
OnOff_status	BI	0
OnOff_command	BO	0
Mode_status	MI	0
Mode_command	MO	0
SetPoint_status	AI	0
UserSetpoint_Status	AI	17
Setpoint_command	AO	0
VirtualTempActive	BI	14
FanSpeed_status	MI	1
FanSpeed_command	MO	1
AirDirectionUD_status	MI	2
AirDirectionUD_command	MO	2
AirDirectionLR_status	MI	3
AirDirectionLR_command	MO	3
RoomTemperature_status	AI	1
RoomTemperature_command	AO	1
ErrorCode	AI	2
ErrorCodeM	MI	4
ErrorActive	BI	1

Object name	Object type	Object instance
ErrorAddress	AI	4
OnTimeCounter	AV	0
FilterSign	BI	6
FilterReset	BO	4
Occupancy	MV	0
OccupiedCoolSetpoint	AV	1
OccupiedHeatSetpoint	AV	2
UnoccupiedCoolSetpoint	AV	3
UnoccupiedHeatSetpoint	AV	4
OccupancyContinuousCheck	BV	0
UnoccupiedDeadBandAction	BV	1
LockRemoteControl	BV	2
ThermostatON	BI	7
DIP_SW_S1_status	AI	9
DIP_SW_S2_status	AI	10
SerialNumber	AI	11
WaitInit_as_Master	AV	8
Indoor_Unit_Operation_Mode_Role	MI	13
FilterSignAddress	AI	18
AC_IU_address	MV	1
Number_of_IU_connected	AI	19
Reserved_1[1]	AV	9

[1]For internal purposes only

7.1.2.3. Available Functionalities Depending on the Operation Mode

The control level varies depending on the current operation mode as shown in the following table.

Operation Mode	Set Temperature	Fan Speed	Vanes
Fan	**X**	✓	✓
Dry	**X**	**X**	✓
Cool	✓	✓	✓
Warm	✓	✓	✓
Automatic	✓	✓	✓

7.1.3. Objects and Properties

7.1.3.1. Daikin AC Gateway (Device Object Type)

Object_Identifier: The gateway can be identified in the BACnet network automatically or manually:

- **Automatic addressing (default):** This mode uses a base address of 246000 + the MAC address number selected in the DIP switch SW2.
- **Manual addressing:** The gateway switches to this mode when this property receives a value from the BACnet side.

> **IMPORTANT**
> During the manual addressing mode, the gateway will not consider the MAC address configured with the DIP switch SW2.

IMPORTANT
If the **Object_Identifier** is overwritten from the BACnet side, the DIP switch SW2 configuration will not be considered for the Device instance calculation until the gateway is reset to the factory settings. See Restore the Factory Settings (page 16).

Object_name: In the **Device Object**, is configurable writing directly on this property.

Description: In the **Device Object**, is configurable writing directly on the property. Max. length: 63 characters.

Property Identifier	Property Datatype	Value	ASHRAE	Gateway
Object_Identifier	BACnetObjectIdentifier	Device, 246000 (default value)	R	W
Object_Name	CharacterString	IN485DAI001R000	R	W
Object_Type	BACnetObjectType	DEVICE (8) (Device Object Type)	R	R
System_Status	BACnetDeviceStatus	OPERATIONAL (0)	R	R
Vendor_Name	CharacterString	HMS Industrial Networks SLU	R	R
Vendor_Identifier	Unsigned16	246	R	R
Model_Name	CharacterString	IN485DAI001R000	R	R
Firmware_Revision	CharacterString	15.0.0.0	R	R
Application_Software_Version	CharacterString	1.0.0.128	R	R
Location	CharacterString	""	O	-
Description	CharacterString	Daikin RC to BACnet MS/TP interface	O	W
Protocol_Version	Unsigned	1	R	R
Protocol_Revision	Unsigned	15	R	R
Protocol_Services_Supported	BACnetServiceSupported	-	R	R
Protocol_Object_Types_Supported	BACnetObjectTypes Supported	Refer to section Supported Object Types (page 17)	R	R
Object_List	BACnetArray[N] of BACnetObjectIdentifier	BACnetARRAY[N]	R	R
Structured_Object_List	BACnetArray[N] of BACnetObjectIdentifier	-	O	-
Max_APDU_Length_Accepted	Unsigned	480	R	R
Segmentation_Supported	BACnetSegmentation	SEGMENTED-BOTH (0)	R	R
Max_Segments_accepted	Unsigned	16	O	R
VT_Classes_Supported	List of BACnetVTClass	-	O	-
Active_VT_Sessions	List of BACnetVTSession	-	O	-
Local_Date	Date	-	O	-
Local_Time	Time	-	O	-
UTC_Offset	INTEGER	-	O	-
Daylight_Savings_Status	BOOLEAN	-	O	-
APDU_Segment_Timeout	Unsigned	3000	R	R
APDU_Timeout	Unsigned	3000	R	R
Number_of_APDU_Retries	Unsigned	3	R	R
List_Of_Session_Keys	List of BACnetSessionKey	-	O	-
Time_Synchronization_Recipients	List of BACnetRecipient	-	O	-
Max_Master	Unsigned	127	R	W
Max_Info_Frames	Unsigned	1	O	R
Device_Address_Binding	List of BACnetAddressBinding	NULL (empty)	R	R
Database_Revision	Unsigned	14	R	R
Configuration_Files	BACnetArray[N] of BACnetObjectIdentifier	-	O	-
Last_Restore_Time	BACnetTimeStamp	-	O	-
Backup_Failure_Timeout	Unsigned16	-	O	-

Property Identifier	Property Datatype	Value	ASHRAE	Gateway
Active_COV_Subscriptions	List of BACnetCOVSubscription	List of BACnetCOVSubscription	O	R
Slave_Proxy_Enable	BACnetArray[N] of BOOLEAN	-	O	-
Manual_Slave_Address_Binding	List of BACnetAddressBinding	-	O	-
Auto_Slave_Discovery	BACnetArray[N] of BOOLEAN	-	O	-
Slave_Address_Binding	BACnetAddressBinding	-	O	-
Last_Restart_Reason	BACnetRestartReason	-	O	-
Time_Of_Device_Restart	BACnetTimeStamp	-	O	-
Restart_Notification_Recipients	List of BACnetRecipient	-	O	-
UTC_Time_Synchronization_Recipients	List of BACnetRecipient	-	O	-
Time_Synchronization_Interval	Unsigned	-	O	-
Align_Intervals	BOOLEAN	-	O	-
Interval_Offset	Unsigned	-	O	-
Profile_Name	CharacterString	-	O	-

7.1.3.2. OnOff_status (Binary Input Object Type)

It indicates if the indoor unit is turned on or off.

Property Identifier	Property Datatype	Value	ASHRAE	Gateway
Object_Identifier	BACnetObjectIdentifier	(Binary Input, 0)	R	R
Object_Name	CharacterString	OnOff_status	R	R
Object_Type	BACnetObjectType	BINARY_INPUT (3)	R	R
Present_Value	BACnetBinaryPV	INACTIVE (0) / ACTIVE (1)	R	R
Description	CharacterString	-	O	-
Device_Type	CharacterString	-	O	-
Status_Flags	BACnetStatusFlags	{FALSE, FALSE/TRUE, FALSE, FALSE}	R	R
Event_State	BACnetEventState	STATE_NORMAL (0)	R	R
Reliability	BACnetReliability	NO_FAULT_DETECTED (0), UNRELIABLE_OTHER (7)	O	R
Out_Of_Service	BOOLEAN	FALSE	R	R
Polarity	BACnetPolarity	NORMAL (0)	R	R
Inactive_Text	CharacterString	Off	O	R
Active_Text	CharacterString	On	O	R
Change_Of_State_Time	BACnetDatetime	-	O	-
Change_Of_State_Count	Unsigned	-	O	-
Time_Of_State_Count_Reset	BACnetDatetime	-	O	-
Elapsed_Active_Time	Unsigned	-	O	-
Time_Of_Active_Time_Reset	BACnetDatetime	-	O	-
Time_Delay	Unsigned	-	O	-
Notification_Class	Unsigned	-	O	-
Alarm_Value	BACnetBinaryPV	-	O	-
Event_Enable	BACnetEventTransitionBits	-	O	-
Acked_Transitions	BACnetEventTransitionBits	-	O	-
Notify_Type	BACnetNotifyType	-	O	-
Event_Time_Stamps	BACnetArray[N] of BACnetTimeStamp	-	O	-
Profile_Name	CharacterString	-	O	-

7.1.3.3. OnOff_command (Binary Output Object Type)

It turns the indoor unit on or off.

Property Identifier	Property Datatype	Value	ASHRAE	Gateway
Object_Identifier	BACnetObjectIdentifier	(Binary Output, 0)	R	R
Object_Name	CharacterString	OnOff_command	R	R
Object_Type	BACnetObjectType	BINARY_OUTPUT (4)	R	R
Present_Value	BACnetBinaryPV	INACTIVE (0) / ACTIVE (1)	R	W
Description	CharacterString	-	O	-
Device_Type	CharacterString	-	O	-
Status_Flags	BACnetStatusFlags	{FALSE, FALSE, FALSE, FALSE}	R	R
Event_State	BACnetEventState	STATE_NORMAL (0)	R	R
Reliability	BACnetReliability	NO_FAULT_DETECTED (0)	O	R
Out_Of_Service	BOOLEAN	FALSE	R	R
Polarity	BACnetPolarity	NORMAL (0)	R	R
Inactive_Text	CharacterString	Off	O	R
Active_Text	CharacterString	On	O	R
Change_Of_State_Time	BACnetDatetime	-	O	-
Change_Of_State_Count	Unsigned	-	O	-
Time_Of_State_Count_Reset	BACnetDatetime	-	O	-
Elapsed_Active_Time	Unsigned	-	O	-
Time_Of_Active_Time_Reset	BACnetDatetime	-	O	-
Minimum_Off_Time	Unsigned32	-	O	-
Minimum_On_Time	Unsigned32	-	O	-
Priority_Array	BACnetPriorityArray	BACnetPriorityArray	R	R
Relinquish_Default	BACnetBinaryPV	INACTIVE (0)	R	R
Time Delay	Unsigned	-	O	-
Notification_Class	Unsigned	-	O	-
Feedback_Value	BACnetBinaryPV	-	O	-
Event_Enable	BACnetEventTransitionBits	-	O	-
Acked_Transitions	BACnetEventTransitionBits	-	O	-
Notify_Type	BACnetNotifyType	-	O	-
Event_Time_Stamps	BACnetArray[N] of BACnetTimeStamp	-	O	-
Profile_Name	CharacterString	-	O	-

7.1.3.4. Mode_status (Multistate Input Object Type)

It indicates the indoor unit's current mode.

Property Identifier	Property Datatype	Value	ASHRAE	Gateway
Object_Identifier	BACnetObjectIdentifier	(Multistate Input, 0)	R	R
Object_Name	CharacterString	Mode_status	R	R
Object_Type	BACnetObjectType	MULTISTATE_INPUT (13)	R	R
Present_Value	Unsigned	1 .. 8	R	R
Description	CharacterString	-	O	-
Device_Type	CharacterString	-	O	-
Status_Flags	BACnetStatusFlags	{FALSE, FALSE/TRUE, FALSE, FALSE}	R	R
Event_State	BACnetEventState	STATE_NORMAL (0)	R	R
Reliability	BACnetReliability	NO_FAULT_DETECTED (0), UNRELIABLE_OTHER(7)	O	R
Out_Of_Service	BOOLEAN	FALSE	R	R
Number_Of_States	Unsigned	8	R	R
State_Text	BACnetArray[N] of CharacterString	Check the **Mode status** table below.	O	R
Time_Delay	Unsigned	-	O	-
Notification_Class	Unsigned	-	O	-
Alarm_Values	List of Unsigned	-	O	-
Fault_Values	List of Unsigned	-	O	-
Event_Enable	BACnetEventTransitionBits	-	O	-
Acked_Transitions	BACnetEventTransitionBits	-	O	-
Notify_Type	BACnetNotifyType	-	O	-
Event_Time_Stamps	BACnetArray[N] of BACnetTimeStamp	-	O	-
Profile_Name	CharacterString	-	O	-

Table 5. Mode status

Present_Value	State_Text
1	Heat
2	Cool
3	Fan
4	Dry
5	Auto
6	AutoHeat
7	AutoCool
8	AutoFan

NOTE

When setting the control mode in Auto, the AC unit itself decides the appropriate mode.

7.1.3.5. Mode_command (Multistate Output Object Type)

It sets the AC indoor unit's mode.

Property Identifier	Property Datatype	Value	ASHRAE	Gateway
Object_Identifier	BACnetObjectIdentifier	(Multistate Output,0)	R	R
Object_Name	CharacterString	Mode_command	R	R
Object_Type	BACnetObjectType	MULTISTATE_OUTPUT (14)	R	R
Present_Value	Unsigned	1 .. 5	R	W
Description	CharacterString	-	O	-
Device_Type	CharacterString	-	O	-
Status_Flags	BACnetStatusFlags	{FALSE, FALSE, FALSE, FALSE}	R	R
Event_State	BACnetEventState	STATE_NORMAL (0)	R	R
Reliability	BACnetReliability	NO_FAULT_DETECTED (0)	O	R
Out_Of_Service	BOOLEAN	FALSE	R	R
Number_Of_States	Unsigned	5	R	R
State_Text	BACnetArray[N] of CharacterString	Check the **Mode command** table below	O	R
Priority_Array	BACnetPriorityArray	BACnetPriorityArray	R	R
Relinquish_Default	Unsigned	1	R	R
Time_Delay	Unsigned	-	O	-
Notification_Class	Unsigned	-	O	-
Feedback_Value	Unsigned	-	O	-
Event_Enable	BACnetEventTransitionBits	-	O	-
Acked_Transitions	BACnetEventTransitionBits	-	O	-
Notify_Type	BACnetNotifyType	-	O	-
Event_Time_Stamps	BACnetArray[N] of BACnetTimeStamp	-	O	-
Profile_Name	CharacterString	-	O	-

Table 6. Mode command

Present_Value	State_Text
1	Heat
2	Cool
3	Fan
4	Dry
5	Auto

NOTE

When setting the control mode in Auto, the AC unit itself decides the appropriate mode.

7.1.3.6. Setpoint_status (Analog Input Object Type)

It reports the temperature setpoint requested to the indoor unit.

NOTE
To know more, see Considerations on Temperature Signals (page 72).

Property Identifier	Property Datatype	Value	ASHRAE	Gateway
Object_Identifier	BACnetObjectIdentifier	(Analog Input, 0)	R	R
Object_Name	CharacterString	SetPoint_status	R	R
Object_Type	BACnetObjectType	ANALOG_INPUT (0)	R	R
Present_Value	REAL	10 .. 32°C / 50 .. 90°F	R	R
Description	CharacterString	-	O	-
Device_Type	CharacterString	-	O	-
Status_Flags	BACnetStatusFlags	{FALSE, FALSE/TRUE, FALSE, FALSE}	R	R
Event_State	BACnetEventState	STATE_NORMAL (0)	R	R
Reliability	BACnetReliability	NO_FAULT_DETECTED (0), UNRELIABLE_OTHER (7)	O	R
Out_Of_Service	BOOLEAN	FALSE	R	R
Update_Interval	Unsigned	-	O	-
Units	BACnetEngineeringUnits	Celsius degrees (62) Fahrenheit degrees (64)	R	R
Min_Pres_Value	REAL	10°C / 50°F	O	R
Max_Pres_Value	REAL	32°C / 90°F	O	R
Resolution	REAL	-	O	-
COV_Increment	REAL	0	O	W
Time_Delay	Unsigned	-	O	-
Notification_Class	Unsigned	-	O	-
High_Limit	REAL	-	O	-
Low_Limit	REAL	-	O	-
Deadband	REAL	-	O	-
Limit_Enable	BACnetLimitEnable	-	O	-
Event_Enable	BACnetEventTransitionBits	-	O	-
Acked_Transitions	BACnetEventTransitionBits	-	O	-
Notify_Type	BACnetNotifyType	-	O	-
Event_Time_Stamps	BACnetArray[N] of BACnetTimeStamp	-	O	-
Profile_Name	CharacterString	-	O	-

NOTE
You can set the temperature scale in Celsius or Fahrenheit via the DIP switches. More information in DIP Switches (page 12).

7.1.3.7. UserSetpoint_status (Analog Input Object Type)

It reports the value written in the Setpoint_command object.

NOTE
To know more, see Considerations on Temperature Signals (page 72).

Property Identifier	Property Datatype	Value	ASHRAE	Gateway
Object_Identifier	BACnetObjectIdentifier	(Analog Input, 17)	R	R
Object_Name	CharacterString	UserSetPoint_status	R	R
Object_Type	BACnetObjectType	ANALOG_INPUT (0)	R	R
Present_Value	REAL	10 .. 32°C / 50 .. 90°F	R	R
Description	CharacterString	-	O	-
Device_Type	CharacterString	-	O	-
Status_Flags	BACnetStatusFlags	{FALSE, FALSE, FALSE, FALSE}	R	R
Event_State	BACnetEventState	STATE_NORMAL (0)	R	R
Reliability	BACnetReliability	NO_FAULT_DETECTED (0) UNRELIABLE_OTHER (7)	O	R
Out_Of_Service	BOOLEAN	FALSE	R	R
Update_Interval	Unsigned	300	O	-
Units	BACnetEngineeringUnits	Celsius degrees (62) Farenheit degrees (64)	R	R
Min_Pres_Value	REAL	10°C / 50°F[1]	O	-
Max_Pres_Value	REAL	32°C / 90°F[2]	O	-
Resolution	REAL	-	O	-
COV_Increment	REAL	0	O	W
Time_Delay	Unsigned	-	O	-
Notification_Class	Unsigned	-	O	-
High_Limit	REAL	-	O	-
Low_Limit	REAL	-	O	-
Deadband	REAL	-	O	-
Limit_Enable	BACnetLimitEnable	-	O	-
Event_Enable	BACnetEventTransitionBits	-	O	-
Acked_Transitions	BACnetEventTransitionBits	-	O	-
Notify_Type	BACnetNotifyType	-	O	-
Event_Time_Stamps	BACnetArray[N] of BACnetTimeStamp	-	O	-
Profile_Name	CharacterString	-	O	-

[1]In case of reading failure, 16 is used

[2]In case of reading failure, 32 is used

NOTE
You can set the temperature scale in Celsius or Fahrenheit scale via DIP switches. More information in DIP Switches (page 12).

7.1.3.8. Setpoint_command (Analog Output Object Type)

It is used to request a temperature setpoint from the BACnet side.

NOTE
To know more, see Considerations on Temperature Signals (page 72).

Property Identifier	Property Datatype	Value	ASHRAE	Gateway
Object_Identifier	BACnetObjectIdentifier	(Analog Output, 0)	R	R
Object_Name	CharacterString	SetPoint_command	R	R
Object_Type	BACnetObjectType	ANALOG_OUTPUT (1)	R	R
Present_Value	REAL	10 .. 32°C / 50 .. 90°F	W	W
Status_Flags	BACnetStatusFlags	{FALSE, FALSE, FALSE, FALSE}	R	R
Event_State	BACnetEventState	STATE_NORMAL (0)	R	R
Reliability	BACnetReliability	NO_FAULT_DETECTED (0)	O	R
Out_Of_Service	BOOLEAN	FALSE	R	R
Update_Interval	Unsigned	-	O	-
Units	BACnetEngineeringUnits	Celsius degrees (62) Fahrenheit degrees (64)	R	R
Min_Pres_Value	REAL	10°C / 50°F[1]	O	R
Max_Pres_Value	REAL	32°C / 90°F[2]	O	R
Resolution	R	-	O	-
COV_Increment	REAL	0	O	W
Priority_Array	BACnetPriorityArray	BACnetPriorityArray	R	R
Relinquish_Default	Unsigned	22	R	R
Time_Delay	Unsigned	-	O	-
Notification_Class	Unsigned	-	O	-
High_Limit	REAL	-	O	-
Low_Limit	REAL	-	O	-
Deadband	REAL	-	O	-
Limit_Enable	BACnetLimitEnable	-	O	-
Event_Enable	BACnetEventTransitionBits	-	O	-
Acked_Transitions	BACnetEventTransitionBits	-	O	-
Notify_Type	BACnetNotifyType	-	O	-
Event_Time_Stamps	BACnetArray[N] of BACnetTimeStamp	-	O	-
Profile_Name	CharacterString	-	O	-

[1]In case of reading failure, 16 is used

[2]In case of reading failure, 32 is used

NOTE
You can set the temperature scale in Celsius or Fahrenheit via the DIP switches. More information in DIP Switches (page 12).

7.1.3.9. VirtualTempActive (Binary Input Object Type)

It indicates if the Virtual Temperature function is active or inactive.

NOTE

The Virtual Temperature function allows the gateway to set the reference temperature using the value reported by a sensor connected to the BMS.

For more information, see Ambient Temperature and Virtual Temperature Function (page 68).

Property Identifier	Property Datatype	Value	ASHRAE	Gateway
Object_Identifier	BACnetObjectIdentifier	(Binary Input, 14)	R	R
Object_Name	CharacterString	VirtualTempActive	R	R
Object_Type	BACnetObjectType	BINARY_INPUT (3)	R	R
Present_Value	BACnetBinaryPV	INACTIVE (0) / ACTIVE (1)	R	R
Description	CharacterString	-	O	-
Device_Type	CharacterString	-	O	-
Status_Flags	BACnetStatusFlags	{FALSE, FALSE, FALSE, FALSE}	R	R
Event_State	BACnetEventState	STATE_NORMAL (0)	R	R
Reliability	BACnetReliability	NO_FAULT_DETECTED (0) UNRELIABLE_OTHER (7)	O	R
Out_Of_Service	BOOLEAN	FALSE	R	R
Polarity	BACnetPolarity	NORMAL (0)	R	R
Inactive_Text	CharacterString	No	O	R
Active_Text	CharacterString	Yes	O	R
Change_Of_State_Time	BACnetDatetime	-	O	-
Change_Of_State_Count	Unsigned	-	O	-
Time_Of_State_Count_Reset	BACnetDatetime	-	O	-
Elapsed_Active_Time	Unsigned	-	O	-
Time_Of_Active_Time_Reset	BACnetDatetime	-	O	-
Time_Delay	Unsigned	-	O	-
Notification_Class	Unsigned	-	O	-
Alarm_Value	BACnetBinaryPV	-	O	-
Event_Enable	BACnetEventTransitionBits	-	O	-
Acked_Transitions	BACnetEventTransitionBits	-	O	-
Notify_Type	BACnetNotifyType	-	O	-
Event_Time_Stamps	BACnetArray[N] of BACnetTimeStamp	-	O	-
Profile_Name	CharacterString	-	O	-

7.1.3.10. FanSpeed_status (Multistate Input Object Type)

It indicates the indoor unit's fan speed.

Property Identifier	Property Datatype	Value	ASHRAE	Gateway
Object_Identifier	BACnetObjectIdentifier	(Multistate Input, 1)	R	R
Object_Name	CharacterString	FanSpeed_status	R	R
Object_Type	BACnetObjectType	MULTISTATE_INPUT (13)	R	R
Present_Value	Unsigned	1 .. 6	R	R
Description	CharacterString	-	O	-
Device_Type	CharacterString	-	O	-
Status_Flags	BACnetStatusFlags	{FALSE, FALSE/TRUE, FALSE, FALSE}	R	R
Event_State	BACnetEventState	STATE_NORMAL (0)	R	R
Reliability	BACnetReliability	NO_FAULT_DETECTED (0), UNRELIABLE_OTHER (7)	O	R
Out_Of_Service	BOOLEAN	FALSE/TRUE	R	R
Number_Of_States	Unsigned	6	R	R
State_Text	BACnetArray[N] of CharacterString	Check the **Fan speed status** table below.	O	R
Time_Delay	Unsigned	-	O	-
Notification_Class	Unsigned	-	O	-
Alarm_Values	List of Unsigned	-	O	-
Fault_Values	List of Unsigned	-	O	-
Event_Enable	BACnetEventTransitionBits	-	O	-
Acked_Transitions	BACnetEventTransitionBits	-	O	-
Notify_Type	BACnetNotifyType	-	O	-
Event_Time_Stamps	BACnetArray[N] of BACnetTimeStamp	-	O	-
Profile_Name	CharacterString	-	O	-

Table 7. Fan speed status

Present_Value	State_Text
1	Auto
2	Fan Speed 1
3	Fan Speed 2
4	Fan Speed 3
5	Fan Speed 4
6	Fan Speed 5

7.1.3.11. FanSpeed_command (Multistate Output Object Type)

It sets the indoor unit's fan speed.

Property Identifier	Property Datatype	Value	ASHRAE	Gateway
Object_Identifier	BACnetObjectIdentifier	(Multistate Output, 1)	R	R
Object_Name	CharacterString	FanSpeed_command	R	R
Object_Type	BACnetObjectType	MULTISTATE_OUTPUT (14)	R	R
Present_Value	Unsigned	1 .. 6	R	W
Description	CharacterString	-	O	-
Device_Type	CharacterString	-	O	-
Status_Flags	BACnetStatusFlags	{FALSE, FALSE, FALSE, FALSE}	R	R
Event_State	BACnetEventState	STATE_NORMAL (0)	R	R
Reliability	BACnetReliability	NO_FAULT_DETECTED (0)	O	R
Out_Of_Service	BOOLEAN	FALSE	R	R
Number_Of_States	Unsigned	6	R	R
State_Text	BACnetArray[N] of CharacterString	Check the **Fan speed command** table below	O	R
Priority_Array	BACnetPriorityArray	BACnetPriorityArray	R	R
Relinquish_Default	Unsigned	1	R	R
Time_Delay	Unsigned	-	O	-
Notification_Class	Unsigned	-	O	-
Feedback_Value	Unsigned	-	O	-
Event_Enable	BACnetEventTransitionBits	-	O	-
Acked_Transitions	BACnetEventTransitionBits	-	O	-
Notify_Type	BACnetNotifyType	-	O	-
Event_Time_Stamps	BACnetArray[N] of BACnetTimeStamp	-	O	-
Profile_Name	CharacterString	-	O	-

Table 8. Fan speed command

Present_Value	State_Text
1	Auto
2	Fan Speed 1
3	Fan Speed 2
4	Fan Speed 3
5	Fan Speed 4
6	Fan Speed 5

7.1.3.12. AirDirectionUD_status (Multistate Input Object Type)

It indicates the indoor unit's vertical air direction (up-down) status.

Property Identifier	Property Datatype	Value	ASHRAE	Gateway
Object_Identifier	BACnetObjectIdentifier	(Multistate Input, 2)	R	R
Object_Name	CharacterString	AirDirectionUD_status	R	R
Object_Type	BACnetObjectType	MULTISTATE_INPUT(13)	R	R
Present_Value	Unsigned	1 .. 6	R	R
Description	CharacterString	-	O	-
Device_Type	CharacterString	-	O	-
Status_Flags	BACnetStatusFlags	{FALSE, FALSE/TRUE, FALSE, FALSE}	R	R
Event_State	BACnetEventState	STATE_NORMAL (0)	R	R
Reliability	BACnetReliability	NO_FAULT_DETECTED (0), UNRELIABLE_OTHER (7)	O	R
Out_Of_Service	BOOLEAN	FALSE/TRUE	R	R
Number_Of_States	Unsigned	6	R	R
State_Text	BACnetArray[N] of CharacterString	Check the **Air direction up-down status** table below.	O	R
Time_Delay	Unsigned	-	O	-
Notification_Class	Unsigned	-	O	-
Alarm_Values	List of Unsigned	-	O	-
Fault_Values	List of Unsigned	-	O	-
Event_Enable	BACnetEventTransitionBits	-	O	-
Acked_Transitions	BACnetEventTransitionBits	-	O	-
Notify_Type	BACnetNotifyType	-	O	-
Event_Time_Stamps	BACnetArray[N] of BACnetTimeStamp	-	O	-
Profile_Name	CharacterString	-	O	-

Table 9. Air direction up-down status

Present_Value	State_Text
1	Pos 1
2	Pos 2
3	Pos 3
4	Pos 4
5	Pos 5
6	Swing

7.1.3.13. AirDirectionUD_command (Multistate Output Object Type)

It sets the indoor unit's vertical air direction (up-down).

Property Identifier	Property Datatype	Value	ASHRAE	Gateway
Object_Identifier	BACnetObjectIdentifier	(Multistate Output, 2)	R	R
Object_Name	CharacterString	AirDirectionUD_command	R	R
Object_Type	BACnetObjectType	MULTISTATE_OUTPUT (14)	R	R
Present_Value	Unsigned	1 .. 6	R	W
Description	CharacterString	-	O	-
Device_Type	CharacterString	-	O	-
Status_Flags	BACnetStatusFlags	{FALSE, FALSE, FALSE, FALSE}	R	R
Event_State	BACnetEventState	STATE_NORMAL (0)	R	R
Reliability	BACnetReliability	NO_FAULT_DETECTED (0)	O	R
Out_Of_Service	BOOLEAN	FALSE	R	R
Number_Of_States	Unsigned	6	R	R
State_Text	BACnetArray[N] of CharacterString	Check the **Air direction up-down command** table below	O	R
Priority_Array	BACnetPriorityArray	-	R	R
Relinquish_Default	Unsigned	1	R	R
Time_Delay	Unsigned	-	O	-
Notification_Class	Unsigned	-	O	-
Feedback_Value	Unsigned	-	O	-
Event_Enable	BACnetEventTransitionBits	-	O	-
Acked_Transitions	BACnetEventTransitionBits	-	O	-
Notify_Type	BACnetNotifyType	-	O	-
Event_Time_Stamps	BACnetArray[N] of BACnetTimeStamp	-	O	-
Profile_Name	CharacterString	-	O	-

Table 10. Air direction up-down command

Present_Value	State_Text
1	Pos 1
2	Pos 2
3	Pos 3
4	Pos 4
5	Pos 5
6	Swing

7.1.3.14. AirDirectionLR_status (Multistate Input Object Type)

It indicates the current indoor unit's horizontal air direction (left-right) status.

Property Identifier	Property Datatype	Value	ASHRAE	Gateway
Object_Identifier	BACnetObjectIdentifier	(Multistate Input, 3)	R	R
Object_Name	CharacterString	AirDirectionLR_status	R	R
Object_Type	BACnetObjectType	MULTISTATE_INPUT(13)	R	R
Present_Value	Unsigned	1 .. 6	R	R
Description	CharacterString	-	O	-
Device_Type	CharacterString	-	O	-
Status_Flags	BACnetStatusFlags	{FALSE, FALSE/TRUE, FALSE, FALSE}	R	R
Event_State	BACnetEventState	STATE_NORMAL (0)	R	R
Reliability	BACnetReliability	NO_FAULT_DETECTED (0), UNRELIABLE_OTHER (7)	O	R
Out_Of_Service	BOOLEAN	FALSE/TRUE	R	R
Number_Of_States	Unsigned	6	R	R
State_Text	BACnetArray[N] of CharacterString	Check the **Air direction left-right status** table below.	O	R
Time_Delay	Unsigned	-	O	-
Notification_Class	Unsigned	-	O	-
Alarm_Values	List of Unsigned	-	O	-
Fault_Values	List of Unsigned	-	O	-
Event_Enable	BACnetEventTransitionBits	-	O	-
Acked_Transitions	BACnetEventTransitionBits	-	O	-
Notify_Type	BACnetNotifyType	-	O	-
Event_Time_Stamps	BACnetArray[N] of BACnetTimeStamp	-	O	-
Profile_Name	CharacterString	-	O	-

Table 11. Air direction left-right status

Present_Value	State_Text
1	Position 1
2	Position 2
3	Position 3
4	Position 4
5	Position 5
6	Swing

7.1.3.15. AirDirectionLR_command (Multi-state Output Object Type)

It allows control over the vertical air direction (left-right) for the indoor unit

Property Identifier	Property Datatype	Value	ASHRAE	Gateway
Object_Identifier	BACnetObjectIdentifier	(Multi-state Output, 3)	R	R
Object_Name	CharacterString	AirDirectionLR_command	R	R
Object_Type	BACnetObjectType	MULTISTATE_OUTPUT (14)	R	R
Present_Value	Unsigned	1 .. 6	W	W
Description	CharacterString	-	O	-
Device_Type	CharacterString	-	O	-
Status_Flags	BACnetStatusFlags	{FALSE, FALSE, FALSE, FALSE}	R	R
Event_State	BACnetEventState	STATE_NORMAL (0)	R	R
Reliability	BACnetReliability	NO_FAULT_DETECTED (0)	O	R
Out_Of_Service	BOOLEAN	FALSE	R	R
Number_Of_States	Unsigned	6	R	R
State_Text	BACnetArray[N] of CharacterString	Check the **Air direction left-right command setting table** below	O	R
Priority_Array	BACnetPriorityArray	-	R	R
Relinquish_Default	Unsigned	-	R	R
Time_Delay	Unsigned	-	O	-
Notification_Class	Unsigned	-	O	-
Feedback_Value	Unsigned	-	O	-
Event_Enable	BACnetEventTransitionBits	-	O	-
Acked_Transitions	BACnetEventTransitionBits	-	O	-
Notify_Type	BACnetNotifyType	-	O	-
Event_Time_Stamps	BACnetArray[N] of BACnetTimeStamp	-	O	-
Profile_Name	CharacterString	-	O	-

Table 12. Air direction left-right command

Present_Value	State_Text
1	Position 1
2	Position 2
3	Position 3
4	Position 4
5	Position 5
6	Swing

7.1.3.16. RoomTemperature_status (Analog Input Object Type)

It reports the ambient temperature measured by the sensor from the AC system side. It can be reported by the indoor unit or the wired remote controller's sensor.

NOTE
To know more, see Ambient Temperature and Virtual Temperature Function (page 68).

Property Identifier	Property Datatype	Value	ASHRAE	Gateway
Object_Identifier	BACnetObjectIdentifier	(Analog Input, 1)	R	R
Object_Name	CharacterString	RoomTemperature_status	R	R
Object_Type	BACnetObjectType	ANALOG_INPUT (0)	R	R
Present_Value	REAL	10 .. 38°C / 50 .. 100°F	R	R
Description	CharacterString	-	O	-
Device_Type	CharacterString	-	O	-
Status_Flags	BACnetStatusFlags	{FALSE, FALSE/TRUE, FALSE, FALSE}	R	R
Event_State	BACnetEventState	STATE_NORMAL (0)	R	R
Reliability	BACnetReliability	NO_FAULT_DETECTED (0), UNRELIABLE_OTHER (7)	O	R
Out_Of_Service	BOOLEAN	FALSE	R	R
Update_Interval	Unsigned	-	O	-
Units	BACnetEngineeringUnits	Celsius degrees (62) Fahrenheit degrees (64)	R	R
Min_Pres_Value	REAL	10°C / 50°F	O	-
Max_Pres_Value	REAL	38°C / 100°F	O	-
Resolution	REAL	-	O	-
COV_Increment	REAL	0	O	W
Time_Delay	Unsigned	-	O	-
Notification_Class	Unsigned	-	O	-
High_Limit	REAL	-	O	-
Low_Limit	REAL	-	O	-
Deadband	REAL	-	O	-
Limit_Enable	BACnetLimitEnable	-	O	-
Event_Enable	BACnetEventTransitionBits	-	O	-
Acked_Transitions	BACnetEventTransitionBits	-	O	-
Notify_Type	BACnetNotifyType	-	O	-
Event_Time_Stamps	BACnetArray[N] of BACnetTimeStamp	-	O	-
Profile_Name	CharacterString	-	O	-

NOTE
You can set the temperature scale in Celsius or Fahrenheit scale via DIP switches. More information in DIP Switches (page 12).

7.1.3.17. RoomTemperature_command (Analog Output Object Type)

It is used to write the ambient temperature measured by a sensor from the BACnet side.

NOTE
To know more, see Considerations on Temperature Signals (page 72).

Property Identifier	Property Datatype	Value	ASHRAE	Gateway
Object_Identifier	BACnetObjectIdentifier	(Analog Output, 1)	R	R
Object_Name	CharacterString	RoomTemperature_command	R	R
Object_Type	BACnetObjectType	ANALOG_OUTPUT (1)	R	R
Present_Value	REAL	10 .. 38°C / 50 .. 100°F	R	W
Description	CharacterString	-	O	-
Device_Type	CharacterString	-	O	-
Status_Flags	BACnetStatusFlags	{FALSE, FALSE, FALSE, FALSE}	R	R
Event_State	BACnetEventState	STATE_NORMAL (0)	R	R
Reliability	BACnetReliability	NO_FAULT_DETECTED (0)	O	R
Out_Of_Service	BOOLEAN	FALSE	R	R
Update_Interval	Unsigned	-	O	-
Units	BACnetEngineeringUnits	Celsius degrees (62) Fahrenheit degrees (64)	R	R
Min_Pres_Value	REAL	10°C / 50°F	O	-
Max_Pres_Value	REAL	38°C / 100°F	O	-
Resolution	REAL	-	O	-
COV_Increment	REAL	0	O	W
Priority_Array	BACnetPriorityArray	BACnetPriorityArray	R	R
Relinquish_Default	Unsigned	-32768	R	W
Time_Delay	Unsigned	-	O	-
Notification_Class	Unsigned	-	O	-
High_Limit	REAL	-	O	-
Low_Limit	REAL	-	O	-
Deadband	REAL	-	O	-
Limit_Enable	BACnetLimitEnable	-	O	-
Event_Enable	BACnetEventTransitionBits	-	O	-
Acked_Transitions	BACnetEventTransitionBits	-	O	-
Notify_Type	BACnetNotifyType	-	O	-
Event_Time_Stamps	BACnetArray[N] of BACnetTimeStamp	-	O	-
Profile_Name	CharacterString	-	O	-

NOTE
You can set the temperature scale in Celsius or Fahrenheit scale via DIP switches. More information in DIP Switches (page 12).

7.1.3.18. ErrorCode (Analog Input Object Type)

It indicates the AC system's current error.

Property Identifier	Property Datatype	Value	ASHRAE	Gateway
Object_Identifier	BACnetObjectIdentifier	(Analog Input, 2)	R	R
Object_Name	CharacterString	ErrorCode	R	R
Object_Type	BACnetObjectType	ANALOG_INPUT (0)	R	R
Present_Value	REAL	-4 .. 244	R	R
Description	CharacterString	-	O	-
Device_Type	CharacterString	-	O	-
Status_Flags	BACnetStatusFlags	{FALSE, FALSE, FALSE, FALSE}	R	R
Event_State	BACnetEventState	STATE_NORMAL (0)	R	R
Reliability	BACnetReliability	NO_FAULT_DETECTED (0)	O	R
Out_Of_Service	BOOLEAN	FALSE	R	R
Update_Interval	Unsigned	300	O	-
Units	BACnetEngineeringUnits	NO_UNITS (95)	R	R
Min_Pres_Value	REAL	-4	O	-
Max_Pres_Value	REAL	244	O	-
Resolution	REAL	-	O	-
COV_Increment	REAL	0	O	W
Time_Delay	Unsigned	-	O	-
Notification_Class	Unsigned	-	O	-
High_Limit	REAL	-	O	-
Low_Limit	REAL	-	O	-
Deadband	REAL	-	O	-
Limit_Enable	BACnetLimitEnable	-	O	-
Event_Enable	BACnetEventTransitionBits	-	O	-
Acked_Transitions	BACnetEventTransitionBits	-	O	-
Notify_Type	BACnetNotifyType	-	O	-
Event_Time_Stamps	BACnetArray[N] of BACnetTimeStamp	-	O	-
Profile_Name	CharacterString	-	O	-

NOTICE

For more information on each error code, see Error Codes (page 74).

7.1.3.19. ErrorCodeM (Multistate Input Object Type)

It indicates the AC system's current error.

Property Identifier	Property Datatype	Value	ASHRAE	Gateway
Object_Identifier	BACnetObjectIdentifier	(Multistate Input, 4)	R	R
Object_Name	CharacterString	ErrorCodeM	R	R
Object_Type	BACnetObjectType	MULTISTATE_INPUT(13)	R	R
Present_Value	Unsigned	1 .. 144	R	R
Description	CharacterString	-	O	-
Device_Type	CharacterString	-	O	-
Status_Flags	BACnetStatusFlags	{FALSE, FALSE, FALSE, FALSE}	R	R
Event_State	BACnetEventState	STATE_NORMAL (0)	R	R
Reliability	BACnetReliability	NO_FAULT_DETECTED (0)	O	R
Out_Of_Service	BOOLEAN	FALSE	R	R
Number_Of_States	Unsigned	144	R	R
State_Text	BACnetArray[N] of CharacterString	Check the **Error codes** table below	O	R
Time_Delay	Unsigned	-	O	-
Notification_Class	Unsigned	-	O	-
Alarm_Values	List of Unsigned	-	O	-
Fault_Values	List of Unsigned	-	O	-
Event_Enable	BACnetEventTransitionBits	-	O	-
Acked_Transitions	BACnetEventTransitionBits	-	O	-
Notify_Type	BACnetNotifyType	-	O	-
Event_Time_Stamps	BACnetArray[N] of BACnetTimeStamp	-	O	-
Profile_Name	CharacterString	-	O	-

Table 13. Error codes

Present_Value	State_Text	Present_Value	State_Text	Present_Value	State_Text	Present_Value	State_Text
1	-	37	E5	73	J0	109	U3
2	CommError	38	E6	74	J1	110	U4
3	Initialization	39	E7	75	J2	111	U5
4	A0	40	E8	76	J3	112	U6
5	A1	41	E9	77	J4	113	U7
6	A2	42	EA	78	J5	114	U8
7	A3	43	EH	79	J6	115	U9
8	A4	44	EC	80	J7	116	UA
9	A5	45	EJ	81	J8	117	UH
10	A6	46	EE	82	J9	118	UC
11	A7	47	EF	83	JA	119	UJ
12	A8	48	H0	84	JH	120	UE
13	A9	49	H1	85	JC	121	UF
14	AA	50	H2	86	JE	122	60
15	AH	51	H3	87	JF	123	61
16	AJ	52	H4	88	L0	124	62
17	AE	53	H5	89	L3	125	63
18	AF	54	H6	90	L4	126	64
19	C0	55	H7	91	L5	127	65
20	C3	56	H8	92	L6	128	68
21	C4	57	H9	93	L7	129	6A
22	C5	58	HA	94	L8	130	6H

Present_Value	State_Text	Present_Value	State_Text	Present_Value	State_Text	Present_Value	State_Text
23	C6	59	HH	95	L9	131	6C
24	C7	60	HC	96	LA	132	6J
25	C8	61	HE	97	LC	133	6E
26	C9	62	HF	98	P0	134	6F
27	CA	63	F0	99	P1	145	51
28	CH	64	F1	100	P3	136	52
29	CC	65	F2	101	P4	137	53
30	CJ	66	F3	102	P5	138	54
31	CE	67	F6	103	P6	139	40
32	CF	68	FA	104	P7	140	41
33	E0	69	FH	105	PJ	141	42
34	E1	70	FC	106	U0	142	43
35	E3	71	FE	107	U1	143	44
36	E4	72	FF	108	U2	144	Unknown

TIP
For more information on each error code, see Error Codes (page 74).

7.1.3.20. ErrorActive (Binary Input Object Type)

It indicates if there is an active error in the AC system.

Property Identifier	Property Datatype	Value	ASHRAE	Gateway
Object_Identifier	BACnetObjectIdentifier	(Binary Input, 1)	R	R
Object_Name	CharacterString	ErrorActive	R	R
Object_Type	BACnetObjectType	BINARY_INPUT (3)	R	R
Present_Value	BACnetBinaryPV	INACTIVE (0) / ACTIVE (1)	R	R
Description	CharacterString	-	O	-
Device_Type	CharacterString	-	O	-
Status_Flags	BACnetStatusFlags	{FALSE, FALSE, FALSE, FALSE}	R	R
Event_State	BACnetEventState	STATE_NORMAL (0)	R	R
Reliability	BACnetReliability	NO_FAULT_DETECTED (0)	O	R
Out_Of_Service	BOOLEAN	FALSE	R	R
Polarity	BACnetPolarity	NORMAL (0)	R	R
Inactive_Text	CharacterString	No	O	R
Active_Text	CharacterString	Error	O	R
Change_Of_State_Time	BACnetDatetime	-	O	-
Change_Of_State_Count	Unsigned	-	O	-
Time_Of_State_Count_Reset	BACnetDatetime	-	O	-
Elapsed_Active_Time	Unsigned	-	O	-
Time_Of_Active_Time_Reset	BACnetDatetime	-	O	-
Time_Delay	Unsigned	-	O	-
Notification_Class	Unsigned	-	O	-
Alarm_Value	BACnetBinaryPV	-	O	-
Event_Enable	BACnetEventTransitionBits	-	O	-
Acked_Transitions	BACnetEventTransitionBits	-	O	-
Notify_Type	BACnetNotifyType	-	O	-
Event_Time_Stamps	BACnetArray[N] of BACnetTimeStamp	-	O	-
Profile_Name	CharacterString	-	O	-

7.1.3.21. ErrorAddress (Analog Input Object Type)

It indicates the address of the indoor unit which is reporting the error.

Property Identifier	Property Datatype	Value	ASHRAE	Intesis
Object_Identifier	BACnetObjectIdentifier	(Analog Input, 4)	R	R
Object_Name	CharacterString	ErrorAddress	R	R
Object_Type	BACnetObjectType	ANALOG_INPUT (0)	R	R
Present_Value	REAL	-	R	R
Description	CharacterString	-	O	-
Device_Type	CharacterString	-	O	-
Status_Flags	BACnetStatusFlags	{FALSE, FALSE/TRUE, FALSE, FALSE}	R	R
Event_State	BACnetEventState	STATE_NORMAL (0)	R	R
Reliability	BACnetReliability	NO_FAULT_DETECTED (0) UNRELIABLE_OTHER (7)	O	R
Out_Of_Service	BOOLEAN	FALSE/TRUE	R	R
Update_Interval	Unsigned	-	O	-
Units	BACnetEngineeringUnits	NO_UNITS (95)	R	R
Min_Pres_Value	REAL	-	O	-
Max_Pres_Value	REAL	-	O	-
Resolution	REAL	-	O	-
COV_Increment	REAL	0	O	W
Time_Delay	Unsigned	-	O	-
Notification_Class	Unsigned	-	O	-
High_Limit	REAL	-	O	-
Low_Limit	REAL	-	O	-
Deadband	REAL	-	O	-
Limit_Enable	BACnetLimitEnable	-	O	-
Event_Enable	BACnetEventTransitionBits	-	O	-
Acked_Transitions	BACnetEventTransitionBits	-	O	-
Notify_Type	BACnetNotifyType	-	O	-
Event_Time_Stamps	BACnetArray[N] of BACnetTimeStamp	-	O	-
Profile_Name	CharacterString	-	O	-

NOTE

This object is only available when the gateway is configured as a header in the RC bus. More information in DIP Switches (page 12).

7.1.3.22. OnTimeCounter (Analog Value Object Type)

It indicates the AC unit running time.

Property Identifier	Property Datatype	Value	ASHRAE	Gateway
Object_Identifier	BACnetObjectIdentifier	(Analog Value, 0)	R	R
Object_Name	CharacterString	OnTimeCounter	R	R
Object_Type	BACnetObjectType	ANALOG_VALUE (2)	R	R
Present_Value	REAL	0 .. 65535	R	R/W
Description	CharacterString	-	O	-
Status_Flags	BACnetStatusFlags	{FALSE, FALSE, FALSE, FALSE}	R	R
Event_State	BACnetEventState	STATE_NORMAL (0)	R	R
Reliability	BACnetReliability	NO_FAULT_DETECTED (0)	O	R
Out_Of_Service	BOOLEAN	FALSE	R	R
Update_Interval	Unsigned	-	O	-
Units	BACnetEngineeringUnits	Hours (71)	R	R
Min_Pres_Value	REAL	0	O	-
Max_Pres_Value	REAL	65535	O	-
Resolution	REAL	-	O	-
COV_Increment	REAL	0	O	W
Time_Delay	Unsigned	-	O	-
Notification_Class	Unsigned	-	O	-
High_Limit	REAL	-	O	-
Low_Limit	REAL	-	O	-
Deadband	REAL	-	O	-
Limit_Enable	BACnetLimitEnable	-	O	-
Event_Enable	BACnetEventTransitionBits	-	O	-
Acked_Transitions	BACnetEventTransitionBits	-	O	-
Notify_Type	BACnetNotifyType	-	O	-
Event_Time_Stamps	BACnetArray[N] of BACnetTimeStamp	-	O	-
Profile_Name	CharacterString	-	O	-

7.1.3.23. FilterSign (Binary Input Object Type)

It indicates the status of the filter.

Property Identifier	Property Datatype	Value	ASHRAE	Intesis
Object_Identifier	BACnetObjectIdentifier	(Binary Input, 1)	R	R
Object_Name	CharacterString	FilterSign	R	R
Object_Type	BACnetObjectType	BINARY_OUTPUT (4)	R	R
Present_Value	BACnetBinaryPV	INACTIVE (0) / ACTIVE (1)	R	R
Description	CharacterString	-	O	-
Device_Type	CharacterString	-	O	-
Status_Flags	BACnetStatusFlags	{FALSE, FALSE/TRUE, FALSE, FALSE}	R	R
Event_State	BACnetEventState	STATE_NORMAL (0)	R	R
Reliability	BACnetReliability	NO_FAULT_DETECTED (0) UNRELIABLE_OTHER (7)	O	R
Out_Of_Service	BOOLEAN	FALSE	R	R
Polarity	BACnetPolarity	NORMAL (0)	R	R
Inactive_Text	CharacterString	OK	O	R
Active_Text	CharacterString	Dirty	O	R
Change_Of_State_Time	BACnetDatetime	-	O	-
Change_Of_State_Count	Unsigned	-	O	-
Time_Of_State_Count_Reset	BACnetDatetime	-	O	-
Elapsed_Active_Time	Unsigned	-	O	-
Time_Of_Active_Time_Reset	BACnetDatetime	-	O	-
Time_Delay	Unsigned	-	O	-
Notification_Class	Unsigned	-	O	-
Feedback_Value	BACnetBinaryPV	-	O	-
Event_Enable	BACnetEventTransitionBits	-	O	-
Acked_Transitions	BACnetEventTransitionBits	-	O	-
Notify_Type	BACnetNotifyType	-	O	-
Event_Time_Stamps	BACnetArray[N] of BACnetTimeStamp	-	O	-
Profile_Name	CharacterString	-	O	-

7.1.3.24. FilterReset (Binary Output Object Type)

It resets the filter signal.

Property Identifier	Property Datatype	Value	ASHRAE	Intesis
Object_Identifier	BACnetObjectIdentifier	(Binary Output, 4)	R	R
Object_Name	CharacterString	FilterReset	R	R
Object_Type	BACnetObjectType	BINARY_OUTPUT (4)	R	R
Present_Value	BACnetBinaryPV	INACTIVE (0) / ACTIVE (1)	W	W
Description	CharacterString	-	O	-
Device_Type	CharacterString	-	O	-
Status_Flags	BACnetStatusFlags	{FALSE, FALSE, FALSE, FALSE}	R	R
Event_State	BACnetEventState	STATE_NORMAL (0)	R	R
Reliability	BACnetReliability	NO_FAULT_DETECTED (0)	O	R
Out_Of_Service	BOOLEAN	FALSE	R	R
Polarity	BACnetPolarity	NORMAL (0)	R	R
Inactive_Text	CharacterString	Normal	O	R
Active_Text	CharacterString	Reset	O	R
Change_Of_State_Time	BACnetDatetime	-	O	-
Change_Of_State_Count	Unsigned	-	O	-
Time_Of_State_Count_Reset	BACnetDatetime	-	O	-
Elapsed_Active_Time	Unsigned	-	O	-
Time_Of_Active_Time_Reset	BACnetDatetime	-	O	-
Minimum_Off_Time	Unsigned32	-	O	-
Minimum_On_Time	Unsigned32	-	O	-
Priority_Array	BACnetPriorityArray	BACnetPriorityArray	R	R
Relinquish_Default	BACnetBinaryPV	INACTIVE (0)	R	R
Time Delay	Unsigned	-	O	-
Notification_Class	Unsigned	-	O	-
Feedback_Value	BACnetBinaryPV	-	O	-
Event_Enable	BACnetEventTransitionBits	-	O	-
Acked_Transitions	BACnetEventTransitionBits	-	O	-
Notify_Type	BACnetNotifyType	-	O	-
Event_Time_Stamps	BACnetArray[N] of BACnetTimeStamp	-	O	-
Profile_Name	CharacterString	-	O	-

NOTE

This object is only available when the gateway is configured as a header in the RC bus. More information in DIP Switches (page 12).

7.1.3.25. Occupancy (Multistate Value Object Type)

It indicates the current occupancy status.

NOTE
To know more, see Occupancy Function (page 60).

Property Identifier	Property Datatype	Value	ASHRAE	Gateway
Object_Identifier	BACnetObjectIdentifier	(Multistate Value, 0)	R	R
Object_Name	CharacterString	Occupancy	R	R
Object_Type	BACnetObjectType	MULTISTATE_VALUE (19)	R	R
Present_Value	BACnetBinaryPV	1 .. 3	R	R/W
Description	CharacterString	-	O	-
Status_Flags	BACnetStatusFlags	{FALSE, FALSE, FALSE, FALSE}	R	R
Event_State	BACnetEventState	STATE_NORMAL (0)	R	R
Reliability	BACnetReliability	NO_FAULT_DETECTED (0)	O	R
Out_Of_Service	BOOLEAN	FALSE	R	R
Number_Of_States	Unsigned	3	R	R
State_Text	BACnetArray[N] of CharacterString	Check the **Occupancy values** table below	O	R
Priority_Array	BACnetPriorityArray	-	R	-
Relinquish_Default	Unsigned	-	R	-
Time_Delay	Unsigned	-	O	-
Notification_Class	Unsigned	-	O	-
Alarm_Value	Unsigned	-	O	-
Event_Enable	BACnetEventTransitionBits	-	O	-
Acked_Transitions	BACnetEventTransitionBits	-	O	-
Notify_Type	BACnetNotifyType	-	O	-
Event_Time_Stamps	BACnetArray[N] of BACnetTimeStamp	-	O	-
Profile_Name	CharacterString	-	O	-

Table 14. Occupancy values

Present_Value	State_Text
1	Occupied
2	Unoccupied
3	Disabled

7.1.3.26. OccupiedCoolSetPoint (Analog Value Object Type)

It indicates the temperature setpoint when the room is occupied, the cool mode is selected, and the occupancy object is enabled.

NOTE
To know more, see Occupancy Function (page 60).

Property Identifier	Property Datatype	Value	ASHRAE	Gateway
Object_Identifier	BACnetObjectIdentifier	(Analog Value, 1)	R	R
Object_Name	CharacterString	OccupiedCoolSetPoint	R	R
Object_Type	BACnetObjectType	ANALOG_VALUE (2)	R	R
Present_Value	REAL	0 .. 65535	R	R/W
Description	CharacterString	-	O	-
Status_Flags	BACnetStatusFlags	{FALSE, FALSE, FALSE, FALSE}	R	R
Event_State	BACnetEventState	STATE_NORMAL (0)	R	R
Reliability	BACnetReliability	NO_FAULT_DETECTED (0)	O	R
Out_Of_Service	BOOLEAN	FALSE	R	R
Update_Interval	Unsigned	-	O	-
Units	BACnetEngineeringUnits	Degrees Celsius (62) Degrees Fahrenheit (64)	R	R
Min_Pres_Value	REAL	0	O	-
Max_Pres_Value	REAL	65535	O	-
Resolution	REAL	-	O	-
COV_Increment	REAL	0	O	W
Time_Delay	Unsigned	-	O	-
Notification_Class	Unsigned	-	O	-
High_Limit	REAL	-	O	-
Low_Limit	REAL	-	O	-
Deadband	REAL	-	O	-
Limit_Enable	BACnetLimitEnable	-	O	-
Event_Enable	BACnetEventTransitionBits	-	O	-
Acked_Transitions	BACnetEventTransitionBits	-	O	-
Notify_Type	BACnetNotifyType	-	O	-
Event_Time_Stamps	BACnetArray[N] of BACnetTimeStamp	-	O	-
Profile_Name	CharacterString	-	O	-

NOTE
You can set the temperature scale in Celsius or Fahrenheit scale via DIP switches. More information in DIP Switches (page 12).

7.1.3.27. OccupiedHeatSetPoint (Analog Value Object Type)

It indicates the temperature setpoint when the room is occupied, the heat mode is selected, and the occupancy object is enabled.

NOTE
To know more, see Occupancy Function (page 60).

Property Identifier	Property Datatype	Value	ASHRAE	Gateway
Object_Identifier	BACnetObjectIdentifier	(Analog Value, 2)	R	R
Object_Name	CharacterString	OccupiedHeatSetPoint	R	R
Object_Type	BACnetObjectType	ANALOG_VALUE (2)	R	R
Present_Value	REAL	0 .. 65535	R	R/W
Description	CharacterString	-	O	-
Status_Flags	BACnetStatusFlags	{FALSE, FALSE, FALSE, FALSE}	R	R
Event_State	BACnetEventState	STATE_NORMAL (0)	R	R
Reliability	BACnetReliability	NO_FAULT_DETECTED (0)	O	R
Out_Of_Service	BOOLEAN	FALSE	R	R
Update_Interval	Unsigned	-	O	-
Units	BACnetEngineeringUnits	Degrees Celsius (62) Degrees Fahrenheit (64)	R	R
Min_Pres_Value	REAL	0	O	-
Max_Pres_Value	REAL	65535	O	-
Resolution	REAL	-	O	-
COV_Increment	REAL	0	O	W
Time_Delay	Unsigned	-	O	-
Notification_Class	Unsigned	-	O	-
High_Limit	REAL	-	O	-
Low_Limit	REAL	-	O	-
Deadband	REAL	-	O	-
Limit_Enable	BACnetLimitEnable	-	O	-
Event_Enable	BACnetEventTransitionBits	-	O	-
Acked_Transitions	BACnetEventTransitionBits	-	O	-
Notify_Type	BACnetNotifyType	-	O	-
Event_Time_Stamps	BACnetArray[N] of BACnetTimeStamp	-	O	-
Profile_Name	CharacterString	-	O	-

NOTE
You can set the temperature scale in Celsius or Fahrenheit scale via DIP switches. More information in DIP Switches (page 12).

7.1.3.28. UnoccupiedCoolSetPoint (Analog Value Object Type)

It indicates the setpoint when the room is unoccupied, the cool mode is selected, and the occupancy object is enabled.

NOTE
To know more, see Occupancy Function (page 60).

Property Identifier	Property Datatype	Value	ASHRAE	Gateway
Object_Identifier	BACnetObjectIdentifier	(Analog Value, 3)	R	R
Object_Name	CharacterString	UnoccupiedCoolSetPoint	R	R
Object_Type	BACnetObjectType	ANALOG_VALUE (2)	R	R
Present_Value	REAL	0 .. 65535	R	R/W
Description	CharacterString	-	O	-
Status_Flags	BACnetStatusFlags	{FALSE, FALSE, FALSE, FALSE}	R	R
Event_State	BACnetEventState	STATE_NORMAL (0)	R	R
Reliability	BACnetReliability	NO_FAULT_DETECTED (0)	O	R
Out_Of_Service	BOOLEAN	FALSE	R	R
Update_Interval	Unsigned	-	O	-
Units	BACnetEngineeringUnits	Degrees Celsius (62) Degrees Fahrenheit (64)	R	R
Min_Pres_Value	REAL	0	O	-
Max_Pres_Value	REAL	65535	O	-
Resolution	REAL	-	O	-
COV_Increment	REAL	0	O	W
Time_Delay	Unsigned	-	O	-
Notification_Class	Unsigned	-	O	-
High_Limit	REAL	-	O	-
Low_Limit	REAL	-	O	-
Deadband	REAL	-	O	-
Limit_Enable	BACnetLimitEnable	-	O	-
Event_Enable	BACnetEventTransitionBits	-	O	-
Acked_Transitions	BACnetEventTransitionBits	-	O	-
Notify_Type	BACnetNotifyType	-	O	-
Event_Time_Stamps	BACnetArray[N] of BACnetTimeStamp	-	O	-
Profile_Name	CharacterString	-	O	-

NOTE
You can set the temperature scale in Celsius or Fahrenheit scale via DIP switches. More information in DIP Switches (page 12).

7.1.3.29. UnoccupiedHeatSetPoint (Analog Value Object Type)

It indicates the setpoint temperature when the room is unoccupied, the heat mode is selected, and the occupancy object is enabled.

NOTE
To know more, see Occupancy Function (page 60).

Property Identifier	Property Datatype	Value	ASHRAE	Gateway
Object_Identifier	BACnetObjectIdentifier	(Analog Value, 4)	R	R
Object_Name	CharacterString	UnoccupiedHeatSetPoint	R	R
Object_Type	BACnetObjectType	ANALOG_VALUE (2)	R	R
Present_Value	REAL	0 .. 65535	R	R/W
Description	CharacterString	-	O	-
Status_Flags	BACnetStatusFlags	{FALSE, FALSE, FALSE, FALSE}	R	R
Event_State	BACnetEventState	STATE_NORMAL (0)	R	R
Reliability	BACnetReliability	NO_FAULT_DETECTED (0)	O	R
Out_Of_Service	BOOLEAN	FALSE	R	R
Update_Interval	Unsigned	-	O	-
Units	BACnetEngineeringUnits	Degrees Celsius (62) Degrees Fahrenheit (64)	R	R
Min_Pres_Value	REAL	0	O	-
Max_Pres_Value	REAL	65535	O	-
Resolution	REAL	-	O	-
COV_Increment	REAL	0	O	W
Time_Delay	Unsigned	-	O	-
Notification_Class	Unsigned	-	O	-
High_Limit	REAL	-	O	-
Low_Limit	REAL	-	O	-
Deadband	REAL	-	O	-
Limit_Enable	BACnetLimitEnable	-	O	-
Event_Enable	BACnetEventTransitionBits	-	O	-
Acked_Transitions	BACnetEventTransitionBits	-	O	-
Notify_Type	BACnetNotifyType	-	O	-
Event_Time_Stamps	BACnetArray[N] of BACnetTimeStamp	-	O	-
Profile_Name	CharacterString	-	O	-

NOTE
You can set the temperature scale in Celsius or Fahrenheit scale via DIP switches. More information in DIP Switches (page 12).

7.1.3.30. OccupancyContinuousCheck (Binary Value Object Type)

It indicates if the system is continuously checking the setpoint and occupancy conditions.

NOTE
To know more, see Occupancy Function (page 60).

Property Identifier	Property Datatype	Value	ASHRAE	Gateway
Object_Identifier	BACnetObjectIdentifier	(Binary Value, 0)	R	R
Object_Name	CharacterString	OccupancyContinuousCheck	R	R
Object_Type	BACnetObjectType	BINARY_VALUE (5)	R	R
Present_Value	BACnetBinaryPV	INACTIVE (0) / ACTIVE (1)	R	R/W
Description	CharacterString	-	O	-
Status_Flags	BACnetStatusFlags	{FALSE, FALSE, FALSE, FALSE}	R	R
Event_State	BACnetEventState	STATE_NORMAL (0)	R	R
Reliability	BACnetReliability	NO_FAULT_DETECTED (0)	O	R
Out_Of_Service	BOOLEAN	FALSE	R	R
Inactive_Text	CharacterString	Disabled	O	R
Active_Text	CharacterString	Enabled	O	R
Change_Of_State_Time	BACnetDatetime	-	O	-
Change_Of_State_Count	Unsigned	-	O	-
Time_Of_State_Count_Reset	BACnetDatetime	-	O	-
Elapsed_Active_Time	Unsigned	-	O	-
Time_Of_Active_Time_Reset	BACnetDatetime	-	O	-
Minimum_Off_Time	Unsigned32	-	O	-
Minimum_On_Time	Unsigned32	-	O	-
Priority_Array	BACnetPriorityArray	BACnetPriorityArray	R	-
Relinquish_Default	BACnetBinaryPV	-	R	-
Time_Delay	Unsigned	-	O	-
Notification_Class	Unsigned	-	O	-
Alarm_Value	BACnetBinaryPV	-	O	-
Event_Enable	BACnetEventTransitionBits	-	O	-
Acked_Transitions	BACnetEventTransitionBits	-	O	-
Notify_Type	BACnetNotifyType	-	O	-
Event_Time_Stamps	BACnetArray[N] of BACnetTimeStamp	-	O	-
Profile_Name	CharacterString	-	O	-

7.1.3.31. UnoccupiedDeadbandAction (Binary Value Object Type)

It indicates the action to be performed when Unoccupancy is enabled, and Room Temperature is within the deadband.

NOTE
To know more, see Occupancy Function (page 60).

Property Identifier	Property Datatype	Value	ASHRAE	Gateway
Object_Identifier	BACnetObjectIdentifier	(Binary Value, 1)	R	R
Object_Name	CharacterString	UnoccupiedDeadbandAction	R	R
Object_Type	BACnetObjectType	BINARY_VALUE (5)	R	R
Present_Value	BACnetBinaryPV	INACTIVE (0) / ACTIVE (1)	R	R/W
Description	CharacterString	-	O	-
Status_Flags	BACnetStatusFlags	{FALSE, FALSE, FALSE, FALSE}	R	R
Event_State	BACnetEventState	STATE_NORMAL (0)	R	R
Reliability	BACnetReliability	NO_FAULT_DETECTED (0)	O	R
Out_Of_Service	BOOLEAN	FALSE	R	R
Inactive_Text	CharacterString	Off	O	R
Active_Text	CharacterString	CurrentMode	O	R
Change_Of_State_Time	BACnetDatetime	-	O	-
Change_Of_State_Count	Unsigned	-	O	-
Time_Of_State_Count_Reset	BACnetDatetime	-	O	-
Elapsed_Active_Time	Unsigned	-	O	-
Time_Of_Active_Time_Reset	BACnetDatetime	-	O	-
Minimum_Off_Time	Unsigned32	-	O	-
Minimum_On_Time	Unsigned32	-	O	-
Priority_Array	BACnetPriorityArray	BACnetPriorityArray	R	-
Relinquish_Default	BACnetBinaryPV	-	R	-
Time_Delay	Unsigned	-	O	-
Notification_Class	Unsigned	-	O	-
Alarm_Value	BACnetBinaryPV	-	O	-
Event_Enable	BACnetEventTransitionBits	-	O	-
Acked_Transitions	BACnetEventTransitionBits	-	O	-
Notify_Type	BACnetNotifyType	-	O	-
Event_Time_Stamps	BACnetArray[N] of BACnetTimeStamp	-	O	-
Profile_Name	CharacterString	-	O	-

7.1.3.32. LockRemoteControl (Binary Value Object Type)

It is used to lock or unlock the AC remote controller.

Property Identifier	Property Datatype	Value	ASHRAE	Gateway
Object_Identifier	BACnetObjectIdentifier	(Binary Value, 2)	R	R
Object_Name	CharacterString	LockRemoteControl	R	R
Object_Type	BACnetObjectType	BINARY_VALUE (5)	R	R
Present_Value	BACnetBinaryPV	INACTIVE (0) / ACTIVE (1)	R	R/W
Description	CharacterString	-	O	-
Status_Flags	BACnetStatusFlags	{FALSE, FALSE, FALSE, FALSE}	R	R
Event_State	BACnetEventState	STATE_NORMAL (0)	R	R
Reliability	BACnetReliability	NO_FAULT_DETECTED (0)	O	R
Out_Of_Service	BOOLEAN	FALSE	R	R
Inactive_Text	CharacterString	Unlocked	O	R
Active_Text	CharacterString	Locked	O	R
Change_Of_State_Time	BACnetDatetime	-	O	-
Change_Of_State_Count	Unsigned	-	O	-
Time_Of_State_Count_Reset	BACnetDatetime	-	O	-
Elapsed_Active_Time	Unsigned	-	O	-
Time_Of_Active_Time_Reset	BACnetDatetime	-	O	-
Minimum_Off_Time	Unsigned32	-	O	-
Minimum_On_Time	Unsigned32	-	O	-
Priority_Array	BACnetPriorityArray	BACnetPriorityArray	R	-
Relinquish_Default	BACnetBinaryPV	-	R	-
Time_Delay	Unsigned	-	O	-
Notification_Class	Unsigned	-	O	-
Alarm_Value	BACnetBinaryPV	-	O	-
Event_Enable	BACnetEventTransitionBits	-	O	-
Acked_Transitions	BACnetEventTransitionBits	-	O	-
Notify_Type	BACnetNotifyType	-	O	-
Event_Time_Stamps	BACnetArray[N] of BACnetTimeStamp	-	O	-
Profile_Name	CharacterString	-	O	-

7.1.3.33. ThermostatON (Binary Input Object Type)

It indicates if the AC system is currently working or not, which depends on the mode and the setpoint and ambient temperatures.

For example, if the AC system is set in the heat mode, the desired setpoint is 25°C, and the ambient temperature is 27°C, the ThermostatON object will report "Off" since there is no real demand.

IMPORTANT
Do not confuse with OnOff_status and OnOff_command objects, which are related to the On/Off function.

Property Identifier	Property Datatype	Value	ASHRAE	IBOX
Object_Identifier	BACnetObjectIdentifier	(Binary Input, 7)	R	R
Object_Name	CharacterString	ThermostatON	R	R
Object_Type	BACnetObjectType	BINARY_INPUT (3)	R	R
Present_Value	BACnetBinaryPV	INACTIVE (0) / ACTIVE (1)	R	R
Description	CharacterString	-	O	-
Device_Type	CharacterString	-	O	-
Status_Flags	BACnetStatusFlags	{FALSE, FALSE/TRUE, FALSE, FALSE}	R	R
Event_State	BACnetEventState	STATE_NORMAL (0)	R	R
Reliability	BACnetReliability	NO_FAULT_DETECTED (0) UNRELIABLE_OTHER (7)	O	R
Out_Of_Service	BOOLEAN	FALSE	R	R
Polarity	BACnetPolarity	NORMAL (0)	R	R
Inactive_Text	CharacterString	Off	O	R
Active_Text	CharacterString	On	O	R
Change_Of_State_Time	BACnetDatetime	-	O	-
Change_Of_State_Count	Unsigned	-	O	-
Time_Of_State_Count_Reset	BACnetDatetime	-	O	-
Elapsed_Active_Time	Unsigned	-	O	-
Time_Of_Active_Time_Reset	BACnetDatetime	-	O	-
Time_Delay	Unsigned	-	O	-
Notification_Class	Unsigned	-	O	-
Alarm_Value	BACnetBinaryPV	-	O	-
Event_Enable	BACnetEventTransitionBits	-	O	-
Acked_Transitions	BACnetEventTransitionBits	-	O	-
Notify_Type	BACnetNotifyType	-	O	-
Event_Time_Stamps	BACnetArray[N] of BACnetTimeStamp	-	O	-
Profile_Name	CharacterString	-	O	-

7.1.3.34. DIP_SW_S1_status (Analog Input Object Type)

It indicates the status of the DIP switch block SW1 in decimal value. To get the status of each individual switch of SW1, just convert it to binary. The gateway reads this value only when booting up.

Property Identifier	Property Datatype	Value	ASHRAE	Gateway
Object_Identifier	BACnetObjectIdentifier	(Analog Input, 9)	R	R
Object_Name	CharacterString	DIP_SW_S1_status	R	R
Object_Type	BACnetObjectType	ANALOG_INPUT (0)	R	R
Present_Value	BACnetBinaryPV	0 .. 255	R	R
Description	CharacterString	-	O	-
Device_Type	CharacterString	-	O	-
Status_Flags	BACnetStatusFlags	{FALSE, FALSE, FALSE, FALSE}	R	R
Event_State	BACnetEventState	STATE_NORMAL (0)	R	R
Reliability	BACnetReliability	NO_FAULT_DETECTED (0)	O	R
Out_Of_Service	BOOLEAN	FALSE / TRUE	R	R
Change_Of_State_Time	BACnetDatetime	-	O	-
Change_Of_State_Count	Unsigned	-	O	-
Time_Of_State_Count_Reset	BACnetDatetime	-	O	-
Elapsed_Active_Time	Unsigned	-	O	-
Time_Of_Active_Time_Reset	BACnetDatetime	-	O	-
Time_Delay	Unsigned	-	O	-
Notification_Class	Unsigned	-	O	-
Alarm_Value	BACnetBinaryPV	-	O	-
Event_Enable	BACnetEventTransitionBits	-	O	-
Acked_Transitions	BACnetEventTransitionBits	-	O	-
Notify_Type	BACnetNotifyType	-	O	-
Event_Time_Stamps	BACnetArray[N] of BACnetTimeStamp	-	O	-
Profile_Name	CharacterString	-	O	-
Units	BACnetEngineeringUnits	No units (95)	R	R
COV_Increment	REAL	0	O	W

7.1.3.35. DIP_SW_S2_status (Analog Input Object Type)

It indicates the status of the DIP switch block SW2 in decimal value. To get the status of each individual switch of SW2, just convert it to binary. The gateway reads this value only when booting up.

Property Identifier	Property Datatype	Value	ASHRAE	Gateway
Object_Identifier	BACnetObjectIdentifier	(Analog Input, 10)	R	R
Object_Name	CharacterString	DIP_SW_S2_status	R	R
Object_Type	BACnetObjectType	ANALOG_INPUT (0)	R	R
Present_Value	BACnetBinaryPV	0 .. 255	R	R
Description	CharacterString	-	O	-
Device_Type	CharacterString	-	O	-
Status_Flags	BACnetStatusFlags	{FALSE, FALSE, FALSE, FALSE}	R	R
Event_State	BACnetEventState	STATE_NORMAL (0)	R	R
Reliability	BACnetReliability	NO_FAULT_DETECTED (0)	O	R
Out_Of_Service	BOOLEAN	FALSE / TRUE	R	R
Change_Of_State_Time	BACnetDatetime	-	O	-
Change_Of_State_Count	Unsigned	-	O	-
Time_Of_State_Count_Reset	BACnetDatetime	-	O	-
Elapsed_Active_Time	Unsigned	-	O	-
Time_Of_Active_Time_Reset	BACnetDatetime	-	O	-
Time_Delay	Unsigned	-	O	-
Notification_Class	Unsigned	-	O	-
Alarm_Value	BACnetBinaryPV	-	O	-
Event_Enable	BACnetEventTransitionBits	-	O	-
Acked_Transitions	BACnetEventTransitionBits	-	O	-
Notify_Type	BACnetNotifyType	-	O	-
Event_Time_Stamps	BACnetArray[N] of BACnetTimeStamp	-	O	-
Profile_Name	CharacterString	-	O	-
Units	BACnetEngineeringUnits	No units (95)	R	R
COV_Increment	REAL	0	O	W

7.1.3.36. SerialNumber (Analog Input Object Type)

It indicates the serial number of the gateway with the pattern **000EXXXXX**, where:

- **000E** is constant and not included in the Present Value property.
- **XXXXX** is the unique device serial number. This is the information provided by the Present Value.

Property Identifier	Property Datatype	Value	ASHRAE	Gateway
Object_Identifier	BACnetObjectIdentifier	(Analog Input, 11)	R	R
Object_Name	CharacterString	SerialNumber	R	R
Object_Type	BACnetObjectType	ANALOG_INPUT (0)	R	R
Present_Value	BACnetBinaryPV	00000 .. 99999	R	R
Description	CharacterString	-	O	-
Device_Type	CharacterString	-	O	-
Status_Flags	BACnetStatusFlags	{FALSE, FALSE, FALSE, FALSE}	R	R
Event_State	BACnetEventState	STATE_NORMAL (0)	R	R
Reliability	BACnetReliability	NO_FAULT_DETECTED (0)	O	R
Polarity	BACnetPolarity	NORMAL (0)	R	R
Change_Of_State_Time	BACnetDatetime	-	O	-
Change_Of_State_Count	Unsigned	-	O	-
Time_Of_State_Count_Reset	BACnetDatetime	-	O	-
Elapsed_Active_Time	Unsigned	-	O	-
Time_Of_Active_Time_Reset	BACnetDatetime	-	O	-
Time_Delay	Unsigned	-	O	-
Notification_Class	Unsigned	-	O	-
Alarm_Value	BACnetBinaryPV	-	O	-
Event_Enable	BACnetEventTransitionBits	-	O	-
Acked_Transitions	BACnetEventTransitionBits	-	O	-
Notify_Type	BACnetNotifyType	-	O	-
Event_Time_Stamps	BACnetArray[N] of BACnetTimeStamp	-	O	-
Profile_Name	CharacterString	-	O	-
Units	BACnetEngineeringUnits	No units (95)	R	R
COV_Increment	REAL	0	O	W

7.1.3.37. WaitInit_as_Master (Analog Value Object Type)

It defines a communication delay in seconds after starting up the gateway.

Property Identifier	Property Datatype	Value	ASHRAE	Gateway
Object_Identifier	BACnetObjectIdentifier	(Analog Value, 8)	R	R
Object_Name	CharacterString	WaitInit_as_Master	R	R
Object_Type	BACnetObjectType	ANALOG_VALUE (2)	R	R
Present_Value	REAL	0 .. 90	R	R/W
Description	CharacterString	-	O	-
Status_Flags	BACnetStatusFlags	{FALSE, FALSE, FALSE, FALSE}	R	R
Event_State	BACnetEventState	STATE_NORMAL (0)	R	R
Reliability	BACnetReliability	NO_FAULT_DETECTED (0)	O	R
Out_Of_Service	BOOLEAN	FALSE	R	R
Update_Interval	Unsigned	-	O	-
Units	BACnetEngineeringUnits	Seconds (73)	R	R
Min_Pres_Value	REAL	0	O	-
Max_Pres_Value	REAL	90	O	-
Resolution	REAL	-	O	-
COV_Increment	REAL	0	O	W
Time_Delay	Unsigned	-	O	-
Notification_Class	Unsigned	-	O	-
High_Limit	REAL	-	O	-
Low_Limit	REAL	-	O	-
Deadband	REAL	-	O	-
Limit_Enable	BACnetLimitEnable	-	O	-
Event_Enable	BACnetEventTransitionBits	-	O	-
Acked_Transitions	BACnetEventTransitionBits	-	O	-
Notify_Type	BACnetNotifyType	-	O	-
Event_Time_Stamps	BACnetArray[N] of BACnetTimeStamp	-	O	-
Profile_Name	CharacterString	-	O	-

NOTE

This object is only available when the gateway is configured as a header in the RC bus. More information in DIP Switches (page 12).

7.1.3.38. Indoor_Unit_Operation_Mode_Role (Multistate Input Object Type)

It indicates the role of the indoor unit.

Property Identifier	Property Datatype	Value	ASHRAE	Gateway
Object_Identifier	BACnetObjectIdentifier	(Multistate Input, 13)	R	R
Object_Name	CharacterString	Indoor_Unit_Operation_Mode_Role	R	R
Object_Type	BACnetObjectType	MULTISTATE_INPUT (13)	R	R
Present_Value	Unsigned	1 .. 3	R	R
Description	CharacterString	-	O	-
Device_Type	CharacterString	-	O	-
Status_Flags	BACnetStatusFlags	{FALSE, FALSE/TRUE, FALSE, FALSE}	R	R
Event_State	BACnetEventState	STATE_NORMAL (0)	R	R
Reliability	BACnetReliability	NO_FAULT_DETECTED (0), UNRELIABLE_OTHER(7)	O	R
Out_Of_Service	BOOLEAN	FALSE	R	R
Number_Of_States	Unsigned	3	R	R
State_Text	BACnetArray[N] of CharacterString	Check the **Mode status table** below.	O	R
Time_Delay	Unsigned	-	O	-
Notification_Class	Unsigned	-	O	-
Alarm_Values	List of Unsigned	-	O	-
Fault_Values	List of Unsigned	-	O	-
Event_Enable	BACnetEventTransitionBits	-	O	-
Acked_Transitions	BACnetEventTransitionBits	-	O	-
Notify_Type	BACnetNotifyType	-	O	-
Event_Time_Stamps	BACnetArray[N] of BACnetTimeStamp	-	O	-
Profile_Name	CharacterString	-	O	-

Table 15. Indoor Unit Operation Mode Role

Present_Value	State_Text
1	Master Unit
2	Slave Unit
3	Free Unit

7.1.3.39. FilterSignAddress (Analog Input Object Type)

It indicates the AC indoor unit address reporting the filter signal.

Property Identifier	Property Datatype	Value	ASHRAE	Intesis
Object_Identifier	BACnetObjectIdentifier	(Analog Input, 18)	R	R
Object_Name	CharacterString	FilterSignAddress	R	R
Object_Type	BACnetObjectType	ANALOG_INPUT (0)	R	R
Present_Value	REAL	-	R	R
Description	CharacterString	-	O	-
Device_Type	CharacterString	-	O	-
Status_Flags	BACnetStatusFlags	{FALSE, FALSE, FALSE, FALSE}	R	R
Event_State	BACnetEventState	STATE_NORMAL (0)	R	R
Reliability	BACnetReliability	NO_FAULT_DETECTED (0) UNRELIABLE_OTHER (7)	O	R
Out_Of_Service	BOOLEAN	FALSE	R	R
Update_Interval	Unsigned	-	O	-
Units	BACnetEngineeringUnits	-	R	R
Min_Pres_Value	REAL	-	O	-
Max_Pres_Value	REAL	-	O	-
Resolution	REAL	-	O	-
COV_Increment	REAL	0	O	W
Time_Delay	Unsigned	-	O	-
Notification_Class	Unsigned	-	O	-
High_Limit	REAL	-	O	-
Low_Limit	REAL	-	O	-
Deadband	REAL	-	O	-
Limit_Enable	BACnetLimitEnable	-	O	-
Event_Enable	BACnetEventTransitionBits	-	O	-
Acked_Transitions	BACnetEventTransitionBits	-	O	-
Notify_Type	BACnetNotifyType	-	O	-
Event_Time_Stamps	BACnetArray[N] of BACnetTimeStamp	-	O	-
Profile_Name	CharacterString	-	O	-

NOTE

This object is only available when the gateway is configured as a header in the RC bus. More information in DIP Switches (page 12).

7.1.3.40. AC IU address (Multistate Value Object Type)

It indicates the address of the indoor unit in the AC system.

Property Identifier	Property Datatype	Value	ASHRAE	Gateway
Object_Identifier	BACnetObjectIdentifier	(Multistate Output, 1)	R	R
Object_Name	CharacterString	AC IU address	R	R
Object_Type	BACnetObjectType	MULTISTATE_VALUE (19)	R	R
Present_Value	Unsigned	1 .. 64	W	W
Description	CharacterString	-	O	-
Status_Flags	BACnetStatusFlags	{FALSE, FALSE, FALSE, FALSE}	R	R
Event_State	BACnetEventState	STATE_NORMAL (0)	R	R
Reliability	BACnetReliability	NO_FAULT_DETECTED (0)	O	R
Out_Of_Service	BOOLEAN	FALSE	R	R
Number_Of_States	Unsigned	64	R	R
State_Text	BACnetArray[N] of CharacterString	Check the **address settings table** below	O	R
Priority_Array	BACnetPriorityArray	-	R	-
Relinquish_Default	Unsigned	-	R	-
Time_Delay	Unsigned	-	O	-
Notification_Class	Unsigned	-	O	-
Alarm_Value	Unsigned	-	O	-
Fault_Value	Unsigned	-	O	-
Event_Enable	BACnetEventTransitionBits	-	O	-
Acked_Transitions	BACnetEventTransitionBits	-	O	-
Notify_Type	BACnetNotifyType	-	O	-
Event_Time_Stamps	BACnetArray[N] of BACnetTimeStamp	-	O	-
Profile_Name	CharacterString	-	O	-

Table 16. AC IU address Values Table

Present_Value	State_Text	AC IU address
1	0	0
2	1	1
3	2	2
...	...	...
63	62	62
64	63	63

7.1.3.41. Number_of_IU_Connected (Analog Input Object Type)

Reports the number of AC units connected to the wired remote controller bus.

Property Identifier	Property Datatype	Value	ASHRAE	Intesis
Object_Identifier	BACnetObjectIdentifier	(Analog Input, 19)	R	R
Object_Name	CharacterString	Number_of_IU_Connected	R	R
Object_Type	BACnetObjectType	ANALOG_INPUT (0)	R	R
Present_Value	REAL	0 .. 16	R	R
Description	CharacterString	-	O	-
Device_Type	CharacterString	-	O	-
Status_Flags	BACnetStatusFlags	{FALSE, FALSE, FALSE, FALSE}	R	R
Event_State	BACnetEventState	STATE_NORMAL (0)	R	R
Reliability	BACnetReliability	NO_FAULT_DETECTED (0)	O	R
Out_Of_Service	BOOLEAN	FALSE	R	R
Update_Interval	Unsigned	-	O	-
Units	BACnetEngineeringUnits	NO_UNITS (95)	R	R
Min_Pres_Value	REAL	0	O	-
Max_Pres_Value	REAL	16	O	-
Resolution	REAL	-	O	-
COV_Increment	REAL	0	O	W
Time_Delay	Unsigned	-	O	-
Notification_Class	Unsigned	-	O	-
High_Limit	REAL	-	O	-
Low_Limit	REAL	-	O	-
Deadband	REAL	-	O	-
Limit_Enable	BACnetLimitEnable	-	O	-
Event_Enable	BACnetEventTransitionBits	-	O	-
Acked_Transitions	BACnetEventTransitionBits	-	O	-
Notify_Type	BACnetNotifyType	-	O	-
Event_Time_Stamps	BACnetArray[N] of BACnetTimeStamp	-	O	-
Profile_Name	CharacterString	-	O	-

7.2. Occupancy Function

IMPORTANT
The Occupancy function is only available for BACnet.

The Occupancy function determines the AC unit's behavior depending on the presence or absence of people in the room. This signal is processed directly in the Intesis gateway and has the capacity to modify three parameters of the AC system: Setpoint, Mode, and On/Off.

IMPORTANT
This function requires a presence sensor on the control system (BMS) side, which determines the state of the **Occupancy** object:

- **Occupied**: Someone is in the room.
- **Unoccupied**: No one is in the room.
- **Disabled**: The function is disabled

Besides the Occupancy object, and to adjust the settings of the Occupancy function, the gateway offers these BACnet objects:

- **Occupancy Cool Setpoint (OCS):** Setpoint temperature when the AC unit is in cool mode and someone is present in the room.
- **Unoccupancy Cool SetPoint (UCS):** Setpoint temperature when the AC unit is in cool mode and no one is in the room.
- **Occupancy Heat Setpoint (OHS):** Setpoint temperature when the AC unit is in heat mode and someone is present in the room.
- **Unoccupancy Heat SetPoint (UHS):** Setpoint temperature when the AC unit is in heat mode and no one is in the room.

Figure 5. Temperature setpoint objects related to the room's occupancy status and the AC unit's mode

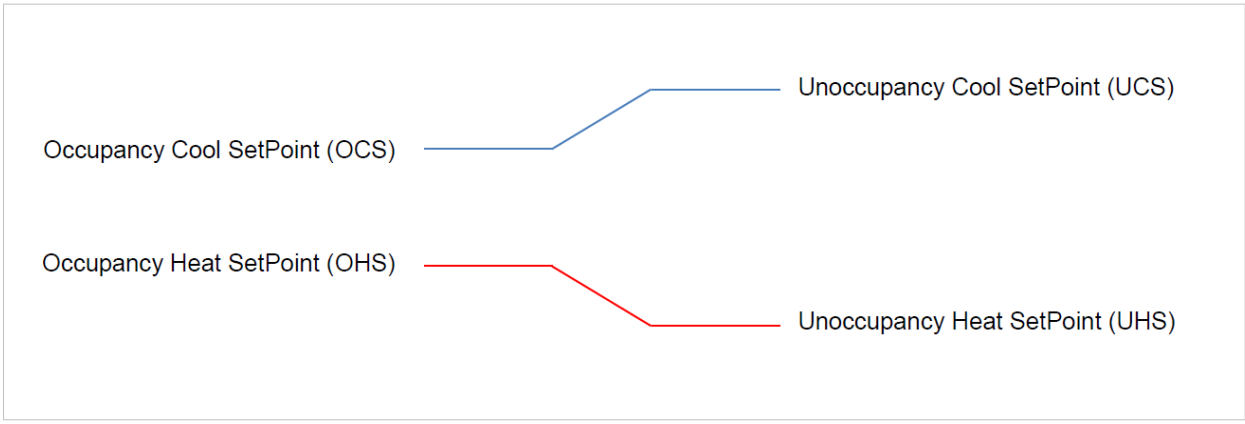

NOTICE
The minimum difference between Cool and Heat setpoints must be 2°C / 4°F.

- **Occupancy Continuous check:** It determines when the gateway checks the room occupancy:
  - If this object's value is 1 (active), the gateway checks the occupancy when the occupancy status and the room temperature change.

- If this object's value is 0 (inactive), the gateway only checks the occupancy when the occupancy status changes.

- **Unoccupied Deadband Action:** It determines the AC unit's behavior when the room is unoccupied and the ambient temperature is within the deadband.
  - If this object's value is 1 (active), the indoor unit will remain on.
  - If this object's value is 0 (inactive), the indoor unit will turn off.

When there is presence in the room, and according to the current room temperature, the AC unit's **mode, setpoint,** and **on/off** will be set to:

Condition	Setpoint	Mode	On/Off
Room temperature > OCS	Current OCS value	Cool	On
Room temperature < OHS	Current OCS value	Heat	On
OCS < Room temperature > OHS	OCS/OHS depending on the current mode (If Fan or Dry mode is active, no setpoint is sent)	Current mode	On

When there is no presence in the room, and according to the current room temperature, the AC unit's **mode, setpoint** and **on/of**f will be set to:

Condition	Setpoint	Mode	On/Off
Room temperature > OCS	Current UCS value	Cool	On
Room temperature < OHS	Current UHS value	Heat	On
OCS < Room temperature > OHS	UCS/UHS depending on the current mode (If Fan or Dry mode is active, no setpoint is sent)	Current mode	On (Deadband action=1)
			Off (Deadband action=0)

NOTICE
Any local change (for example with the remote control) in the Setpoint, Mode, or the On/Off signal will disable the Occupancy function.

8. Modbus Specifications

The following sections provide the gateway's specifications when it is set for Modbus RTU.

8.1. Implemented Modbus Functions

The IN485DAI001R000 gateway implements the following standard Modbus functions:

- 03: Read Holding Registers
- 04: Read Input Registers
- 06: Write Single Register
- 16: Write Multiple Registers

IMPORTANT
Even though function 16 is available, the gateway does not allow writing operations on more than one register with the same request, so the length field when using this function should always be one.

8.1.1. Modbus Physical Layer

The IN485DAI001R000 gateway implements a Modbus RTU (server) interface to be connected to an EIA-485 bus. It features an 8-N-2 communication (eight data bits, no parity, and two stop bits) with several available baud rates: 2400, 4800, **9600 -default-**, 19200, 38400, 57600, 76800, and 115200 bps. It also supports 8-N-1 communication (eight data bits, no parity, and one stop bit).

NOTE
AUTO-DETECT FUNCTION. The gateway will automatically detect the communication type (8-N-1 or 8-N-2) and set itself accordingly. No user action or manual settings are required.

8.2. Modbus Registers

All registers are 16-bit unsigned holding register type and use the standard Modbus big-endian notation.

Register Name	Possible values	Modbus address (base 0)	PLC address (base 1)	R/W
ON/OFF	0: Off 1: On	0	1	R/W
OPERATION MODE **NOTE** The available modes may vary depending on the AC model.	0: Auto 1: Heat 2: Dry 3: Fan 4: Cool	1	2	R/W
FAN SPEED **NOTE** The available fan speeds may vary depending on the AC model.	0: Auto 1 .. 5: Speed 1 .. Speed 5	2	3	R/W

Register Name	Possible values	Modbus address (base 0)	PLC address (base 1)	R/W
VANE U/D POSITION **NOTE** The available vane positions may vary depending on the AC model.	1 .. 5: Position 1 .. Position 5 10: Swing	3	4	R/W
TEMPERATURE (USER) SETPOINT **NOTE** Temperature requested from the Modbus side. To know more, see Considerations on Temperature Signals (page 72).	-32768 (Initialization value) Value in °C; °F; x1; x10 **NOTE** Set the temperature units via the DIP switch SW2. **NOTE** The value range depend on the AC model.	4	5	R/W
INDOOR UNIT REFERENCE TEMPERATURE **NOTE** Ambient temperature that the indoor unit is using as a reference. To know more, see Considerations on Temperature Signals (page 72).	Value in °C; °F; x1; x10 **NOTE** Set the temperature units via the DIP switch SW2. **NOTE** The value range depend on the AC model.	5	6	R
WINDOW CONTACT PROTOCOL INPUT	0: Closed (default) 1: Open	6	7	R/W
CONTROL OBJECTS DISABLEMENT **NOTE** It disables the control of the AC unit through the registers of the gateway. This value is stored in non-volatile memory.	0: Control objects enabled (default) 1: Control objects disabled **TIP** Send a 0 to this register if, for an unknown reason, the gateway doesn't work.	7	8	R/W
REMOTE CONTROL DISABLEMENT **NOTE** It disables the control of the AC unit through any RC. This value is stored in non-volatile memory.	0: RC enabled (default) 1: RC disabled	8	9	R/W
OPERATION TIME **NOTE** This value is stored in non-volatile memory.	0 .. 65535 hours	9	10	R/W
ALARM STATUS	0: No Error present 1: Error present	10	11	R
ERROR CODE	0: No error present 65535 (-1 if it is read as a signed value): Communication error between the gateway or the remote controller and the AC unit. For any other value, see Error Codes (page 74).	11	12	R

Register Name	Possible values	Modbus address (base 0)	PLC address (base 1)	R/W
OPEN WINDOW TIMEOUT (MIN) **NOTE** Once window contact is "open", this is the time in minutes before turning the AC unit off.	0 .. 30 minutes Default value: 30	13	14	R/W
BAUDRATE	Baudrate currently selected via DIP switch SW2.	14	15	R
MODBUS SLAVE ADDRESS	1 .. 63	15	16	R
MAX NUM OF FANSPEEDS	Configured number of fan speeds.	21	22	R
INPUT SENSOR TEMPERATURE **NOTE** Ambient temperature provided by a sensor from the Modbus side. See Ambient Temperature and Virtual Temperature Function (page 68).	-32768: (Initialization value). No temperature is provided by an external sensor. Any other value: Ambient temperature reported by the external sensor.	22	23	R/W
AC REAL SETPOINT **NOTE** Temperature setopint sent to the indoor unit. To know more, see Considerations on Temperature Signals (page 72).	Value in °C; °F; x1; x10 **NOTE** Set the temperature units via the DIP switch SW2. **NOTE** The value range depend on the AC model.	23	24	R
ACTUAL AC MAX SETPOINT	-32768 (Initialization value) Value in °C; °F; x1; x10 **NOTE** Set the temperature units via the DIP switch SW2. **NOTE** The value range depend on the AC model.	24	25	R
ACTUAL AC MIN SETPOINT	-32768 (Initialization value) Value in °C; °F; x1; x10 **NOTE** Set the temperature units via the DIP switch SW2. **NOTE** The value range depend on the AC model.	25	26	R
VANE L/R POSITION **NOTE** The available vane positions may vary depending on the AC model.	1 .. 5: Pos 1 .. Pos 5 10: Swing	26	27	R/W
WINDOW CONTACT FUNCTIONAL STATUS (FEEDBACK)	0: Not active (default) 1: Active (the window is open)	31	32	R

Register Name	Possible values	Modbus address (base 0)	PLC address (base 1)	R/W
WIN CONTACT ON/OFF DISABLEMENT	0: Window contact is not disabling On/Off 1: Window contact is disabling On/Off	40	41	R
FILTER RESET	1: Reset	43	44	W
FILTER STATUS	0: Off - Filter status clean 1: Filter status alarm	44	45	R
SWITCH VALUE	Current value of DIP switches	48	49	R
INPUT REFERENCE TEMPERATURE (FEEDBACK)	Value in °C; °F; x1; x10 **NOTE** Set the temperature units via the DIP switch SW2.	65	66	R
RETURN PATH TEMPERATURE	Value in °C; °F; x1; x10 **NOTE** Set the temperature units via the DIP switch SW2.	66	67	R
ERROR ADDRESS	It indicates the AC indoor unit address that reports the error.	81	82	R
FILTER SIGNAL ADDRESS	It indicates the AC indoor unit address that reports the filter signal.	86	87	R
THERMOSTAT ON **NOTE** The THERMOSTAT ON register indicates if the AC system is currently working to reach or maintain the set point temperatures selected. It should not be confused with the On/Off function.	0: The AC system is within the setpoint temperature. 1: The AC system is not within the setpoint temperature and is working to achieve the setpoint temperature.	87	88	R
OPERATION MODE ROLE	1: ROLE_MASTER 2: ROLE_SLAVE 3: ROLE_FREE (alone)	88	89	R
FW version MSB	It shows the first two numbers of the firmware version. Example: For version 1.2.3.4, it will show 1.2 (in hexadecimal).	94	95	R
FW version LSB	It shows the last two numbers of the firmware version. Example: For version 1.2.3.4, it will show 3.4 (in hexadecimal).	95	96	R
MASTER/SLAVE	0: Slave 1: Master	98	99	R
RESET	1: Reset	99	100	W
VIRTUAL TEMP ACTIVE	0: Not active 1: Active	129	130	R
WINDOW CONTACT STEP	0: Idle (window is closed). 1: Timeout1 (window is opened, timeout starts). 2: Timeout2 (it doesn't apply to window contact). 3: Window contact applies (window is opened, time is finished, window contact action is applied).	130	131	R
WINDOW CONTACT RELOAD LAST VALUE	0: No (default) 1: Yes	1000	1001	R/W
WINDOW CONTACT LOCK WHEN OPEN	0: No 1:Yes	1001	1002	R/W
WINDOW TIMEOUT (IN MINUTES)	0 .. 30	1002	1003	R/W

Register Name	Possible values	Modbus address (base 0)	PLC address (base 1)	R/W
MACHINE MODE	0: Normal 2: Limited setpoint	1150	1151	R/W
MACHINE MIN SETPOINT COOL	°C/°F Default value: 24°C / 75°F **NOTE** Set the temperature units via the DIP switch SW2.	1153	1154	R/W
MACHINE MAX SETPOINT COOL	°C/°F Default value: 28°C / 82°F **NOTE** Set the temperature units via the DIP switch SW2.	1154	1155	R/W
MACHINE MIN SETPOINT HEAT	°C/°F Default value: 19°C / 66°F **NOTE** Set the temperature units via the DIP switch SW2.	1155	1156	R/W
MACHINE MAX SETPOINT HEAT	°C/°F Default value: 23°C / 73°F **NOTE** Set the temperature units via the DIP switch SW2.	1156	1167	R/W
REMOTE LOCK ON NVM	0: Remote lock is disabled after reset 1: It keeps the value set in register 8 (AC remote control disablement)	1220	1221	R/W
INITIAL WAIT AS MASTER	Startup delay, in seconds Default value: 0 seconds (no delay)	1230	1231	R/W
DEVICE IDENTIFIER	2050	2000	2001	R
MODE_MAP	Indicates the available states of the signal. Each bit in the register has its own meaning. Refer to the following tables for additional information.	2001	2002	R
FAN_MAP		2002	2003	R
VANES_MAP		2003	2004	R
U_D_VANES_MAP		2004	2005	R
L_R_VANES_MAP		2005	2006	R

NOTICE
Custom limits defined in the **MACHINE MIN SETPOINT COOL**, **MACHINE MAX SETPOINT COOL**, **MACHINE MIN SETPOINT HEAT**, and **MACHINE MAX SETPOINT HEAT** registers only apply when the **MACHINE MODE** value is set to 2 (Limited setpoint).

Table 17. MODE_MAP bit characterization

Bit 15	Bit 04	Bit 03	Bit 02	Bit 01	Bit 00
1: Invalid 0: Valid	COOL	FAN	DRY	HEAT	AUTO
	1: Enabled 0: Disabled				

Table 18. FAN_MAP bit characterization

Bit 15	Bit 05	Bit 04	Bit 03	Bit 02	Bit 01	Bit 00
1: Invalid 0: Valid	FAN_5	FAN_4	FAN_3	FAN_2	FAN_1	AUTO
	1: Enabled 0: Disabled					

Table 19. VANES_MAP bit characterization

Bit 15	Bit 03	Bit 02	Bit 01	Bit 00
1: Invalid 0: Valid	PULSE L/R	PULSE U/D	SPECIFIC L/R	SPECIFIC U/D
	1: Enabled 0: Disabled			

Table 20. U_D_VANES_MAP bit characterization

Bit 15	Bit 10	Bit 07	Bit 06	Bit 05	Bit 04	Bit 03	Bit 02	Bit 01
1: Invalid 0: Valid	SWING	POS_7	POS_6	POS_5	POS_4	POS_3	POS_2	POS_1
	1: Enabled 0: Disabled							

Table 21. L_R_VANES_MAP bit characterization

Bit 15	Bit 10	Bit 05	Bit 04	Bit 03	Bit 02	Bit 01	Bit 00
1: Invalid 0: Valid	SWING	POS_5	POS_4	POS_3	POS_2	POS_1	AUTO/OFF
	1: Enabled 0: Disabled						

NOTE

The following registers are only available when the gateway is configured as a header in the RC bus:

- ERROR ADDRESS
- FILTER RESET
- FILTER SIGNAL ADDRESS
- INITIAL WAIT AS MASTER

More information in DIP Switches (page 12).

8.2.1. Available Functionalities Depending on the Operation Mode

The control level varies depending on the current operation mode as shown in the following table.

Operation Mode	Set Temperature	Fan Speed	Vanes
Fan	**X**	✓	✓
Dry	**X**	**X**	✓
Cool	✓	✓	✓
Warm	✓	✓	✓
Automatic	✓	✓	✓

9. Ambient Temperature and Virtual Temperature Function

The IN485DAI001R000 gateway enables the use of a temperature sensor from the BACnet/Modbus-based BMS.

The reason for using this sensor could be that it is better positioned than the sensor in the indoor unit or the wired remote controller. If an indoor unit or wired remote controller is mounted far away, it can lead to a significant difference between the temperature perceived by their sensors and the actual temperature in the occupied space.

Figure 6. In this case, the room temperature is four degrees Celsius less than the temperature perceived by the indoor unit's sensor.

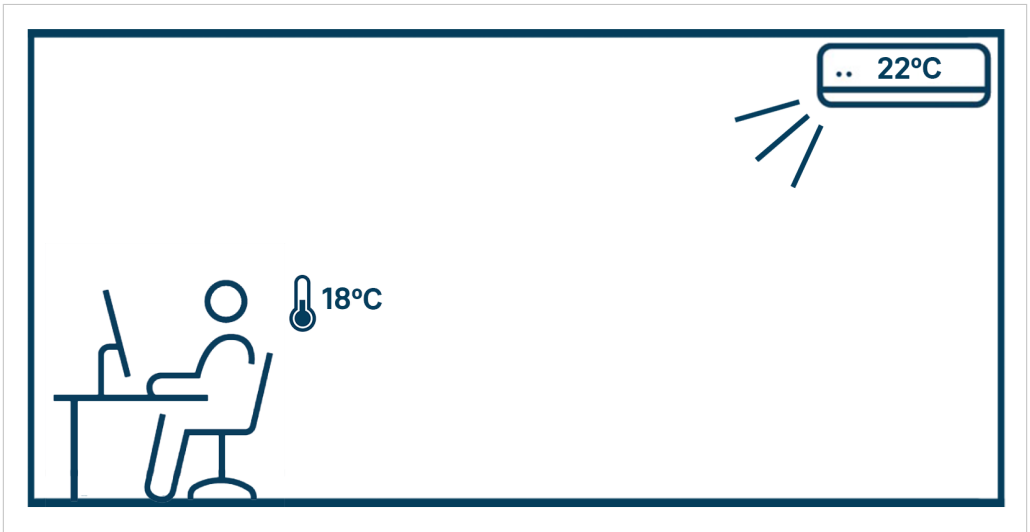

When using the temperature sensor from the BMS side, the IN485DAI001R000 gateway allows two different options:

- Direct overwriting of the AC system reference temperature.
- Activation of the Virtual Temperature function.

As explained below, the choice between these options depends on the role of both the gateway and the Daikin wired RC. It also depends on the thermostat used by the AC system to determine its reference temperature, which can be either the sensor inside the indoor unit or the sensor inside the wired RC.

DIRECT OVERWRITING OF THE INDOOR UNIT'S REFERENCE TEMPERATURE

1. Set the IN485DAI001R000 gateway as the header of the bus by setting the SW1-1 (DIP switch 1, position 1) ON. See DIP Switches (page 12).
2. Set the IN485DAI001R000 gateway to read the temperature provided by the wired RC by setting the SW1-2 (DIP switch 1, position 2) ON. See DIP Switches (page 12).
3. Set the Daikin wired RC as the follower of the bus.

NOTE
Refer to the documentation provided with the Daikin system to know the needed procedure to set the role of the wired RC.

4. Set the Daikin AC system to read the temperature provided by the sensor inside the wired RC.

> **NOTE**
> This configuration must be performed by a Daikin authorized installer through the remote controller.

5. The indoor unit will report the error code **CJ** through the wired RC and the error code **45** through the BMS console, warning that there is an abnormality in the wired RC's thermistor.

> **NOTICE**
> This error is reported because no valid value has been written yet as the ambient temperature. Take into consideration that, after commissioning the gateway for the first time, the default value for the BACnet object **RoomTemperature_command (Analog Output)**/Modbus register **Input sensor temperature (protocol address register 22 / PLC address register 23)**[1] is -32768, which is an invalid value.

6. Write the value reported by the BMS sensor using the BACnet object **RoomTemperature_command (Analog Output)**/Modbus register **Input sensor temperature (protocol address register 22 / PLC address register 23)**[1].

> **NOTE**
> [1] The names of the Modbus registers provided in this section are for reference purposes only; pay attention chiefly to their numerical addresses.

> **NOTE**
> At this point, the error reported by the indoor unit will disappear. From now on, the AC system will use the value reported by the BACnet/Modbus temperature sensor as its reference temperature.

ACTIVATION OF THE VIRTUAL TEMPERATURE FUNCTION

> **NOTE**
> Before explaining how to activate the Virtual Temperature function, it is important to understand how this function works.

How the Virtual Temperature function works:

The Virtual Temperature function uses the value reported by the temperature sensor connected to the BMS side to apply a formula that establishes the setpoint temperature for the indoor unit. This recalculated setpoint offsets the difference between the real temperature in the room and the temperature at which the indoor unit is operating.

The formula used by the Virtual Temperature function is the following:

$S_{AC} = T_{AC} – (T_{BMS} – S_{BMS})$

Where:

- S_{AC}: Recalculated temperature setpoint sent to the indoor unit after the gateway applies the formula.
- T_{AC}: Indoor unit's reference temperature.
- T_{BMS}: Ambient temperature reported by the sensor connected to the BMS side.
- S_{BMS}: Temperature setpoint requested from the BMS side.

Once activated, the Virtual Temperature function recalculates the setpoint when any of these values changes.

In practical terms, when you write a value in the BACnet object **RoomTemperature_command (Analog Output)**/ Modbus register **Input sensor temperature (protocol address register 22 / PLC address register 23)**, the gateway activates the Virtual Temperature function, using this value to recalculate the indoor unit's reference temperature.

How to activate the Virtual Temperature function:

The Virtual Temperature function can be activated with the gateway acting either as the header or the follower of the wired RC bus.

- **Procedure with the gateway acting as the header of the RC bus:**

1. Set the IN485DAI001R000 gateway as the header of the bus by setting the SW1-1 (DIP switch 1, position 1) ON. See DIP Switches (page 12).
2. Set the IN485DAI001R000 gateway to read the temperature provided by the indoor unit by setting the SW1-2 (DIP switch 1, position 2) OFF. See DIP Switches (page 12).
3. Set the Daikin wired RC as the follower of the bus.

   NOTE
   Refer to the documentation provided with the Daikin system to know the needed procedure to set the role of the wired RC.

4. Set the Daikin AC system to read the temperature provided by the sensor inside the indoor unit.

   NOTE
   This configuration must be performed by a Daikin authorized installer through the remote controller.

- **Procedure with the gateway acting as the follower of the RC bus:**

1. Set the IN485DAI001R000 gateway as the follower of the bus by setting the SW1-1 (DIP switch 1, position 1) OFF. See DIP Switches (page 12).
2. Set the Daikin wired RC as the header of the bus.

   NOTE
   Refer to the documentation provided with the Daikin system to know the needed procedure to set the role of the wired RC.

3. Set both the gateway and the AC system to read the temperature from the same source, either from the thermistor inside the indoor unit or the wired RC.
   a. For the gateway, this is done via the SW1-2 (DIP switch 1, position 2):
      – ON: The gateway reads the temperature from the thermistor of the wired RC.
      – OFF: The gateway reads the temperature from the thermistor of the indoor unit.
      To know more, see DIP Switches (page 12).
   b. For the AC system, this configuration is done via the wired RC must and must be performed by a Daikin authorized installer.

Once the roles and reading sources of both the gateway and the wired RC are set, proceed as follows:

1. Write the desired setpoint temperature in the BACnet object **Setpoint_command (Analog Output)**/Modbus register **Temperature (user) setpoint (protocol address 4, PLC address 5)**.

2. Read the temperature value reported by a temperature sensor from the BMS side.
3. Write this value in the BACnet object **RoomTemperature_command (Analog Output)**/Modbus register **Input sensor temperature (protocol address register 22 / PLC address register 23)**.

NOTE
At this point, the Virtual Temperature function is automatically activated. From now on, the AC system will use the value reported by the formula described above as its reference temperature.

NOTICE
Due to the formula applied by the Virtual Temperature function, the temperature reported by the AC system and the actual ambient temperature may differ. This must not be taken as an error, but as the normal behavior when the Virtual Temperature function is working.

To know more about the BACnet objects/Modbus registers dedicated to the temperature signals and to the Virtual Temperature function, see Considerations on Temperature Signals (page 72).

NOTE
When starting up the gateway, the dedicated object/register to write the ambient temperature perceived from the BMS side reports a value of -32768 (0x8000). For BACnet, this object is **RoomTemperature_command (Analog Output)**. For Modbus, this register is **Input sensor temperature (protocol address 22 / PLC address 23)**.

FOR BACNET
When starting up the gateway, the Present_Value property for the RoomTemperature_command object is 0, and the Reliability property displays **UNRELIABLE_OTHER (7)**. This means that no external temperature reference has been provided to the object, so the system is not applying the Virtual Temperature function. However, after receiving the first value, the Reliability property changes to **NO_FAULT_DETECTED (0)**. After that, any value can be used in the temperature range, including 0.

TROUBLESHOOTING

Typical malfunctions with the ambient temperature and the Virtual Temperature function are related to mistakes in the configuration of the gateway's or the wired RC's role, or in the values written in the BACnet objects/Modbus registers. If an error occurs, consider the following:

- **The gateway and the wired RC have the correct role.**
  Remember that the gateway can overwrite the reference temperature of the AC system using a temperature sensor from the BMS side only when it is set as the header and the wired RC is set as the follower.
  To set the gateway as the header of the bus, set the SW1-1 (DIP switch 1, position 1) ON. To know more, see Coexistence of the Gateway with a Remote Controller (page 10).
  The role of the wired RC is usually set through a DIP switch mounted on its board, but you should read the documentation delivered with the AC system to ensure the necessary procedure.
- **The gateway and the wired RC are reading the temperature from the same source.**
  Both the gateway and the AC system can be set to read the temperature from the indoor unit or the wired RC. Only when both the gateway and the AC system are set to read the temperature from the wired RC can the gateway overwrite the reference temperature of the AC system using a temperature sensor from the BMS side.
  Set the gateway to read the temperature of the wired RC thermistor by setting the SW1-2 (DIP switch 1, position 2) ON. To know more, see DIP Switches (page 12).
- **Valid values are written in the BACnet objects/Modbus registers dedicated to the temperature.**[2]

Pay special attention to the BACnet object **RoomTemperature_command (Analog Output)**/Modbus register **Input sensor temperature (protocol address register 22 / PLC address register 23)**, which are dedicated to write the value reported by the BMS sensor.

NOTE
[2] The following section provides an extended explanation of all the BACnet objects/Modbus registers dedicated to the temperature signals and to the Virtual Temperature function.

9.1. Considerations on Temperature Signals

NOTE
You can set the temperature signals in degrees Celsius or Fahrenheit via the DIP switch SW2. More information in DIP Switches (page 12).

NOTE
The names of the Modbus registers provided in this section are for reference purposes only; pay attention chiefly to their numerical addresses.

Table 22. Objects and registers dedicated to temperature signals and to the Virtual Temperature function

BACnet object	Modbus register	Function when the Virtual Temperature function is inactive	Function when the Virtual Temperature function is active
Setpoint_status (Analog Input)	AC real setpoint (R) (protocol address 23 / PLC address 24)	It indicates the temperature setpoint sent to the indoor unit. It will report the same value as the value introduced in the Setpoint_command/AC unit temperature setpoint.	It indicates the recalculated temperature setpoint sent to the indoor unit after the gateway applies the $S_{AC} = T_{AC} – (T_{BMS} – S_{BMS})$ formula. It may report a value different from the value introduced in the Setpoint_command/AC unit temperature setpoint.
Setpoint_command (Analog Output)	Temperature (user) setpoint (R/W) (protocol address 4 / PLC address 5)	It is used to request the temperature setpoint from the BMS side. It will report the same value as a wired remote controller connected to the indoor unit (if available).	It is used to request the temperature setpoint from the BMS side. It may report a value different from the one reported by a wired remote controller connected to the indoor unit (if available).
RoomTemperature_status (Analog Input)	Indoor unit reference temperature (R) (protocol address 5 / PLC address 6)	It indicates the ambient temperature perceived by the sensor from the AC system side (the sensor inside the indoor unit or inside the wired remote controller, if available).	It indicates the ambient temperature perceived by the sensor from the AC system side (the sensor inside the indoor unit or inside the wired remote controller, if available).
RoomTemperature_command (Analog Output)	Input sensor temperature (R/W) (protocol address 22 / PLC address 23)*	It is used to activate the Virtual Temperature function by writing the value reported from a BMS side sensor.	It indicates the temperature reported from a BMS side sensor.
VirtualTemperatureActive (Binary Input)	Virtual Temp Active (R) (protocol address 129 / PLC address 130)**	It reports a value of 0	It reports a value of 1
UserSetpoint_status (Analog Input)	Temperature (user) setpoint (R/W) (protocol address 4 / PLC address 5)	It indicates the temperature setpoint requested from the BMS side.	It indicates the original temperature setpoint requested from the BMS side.

NOTE
* This register has been available since firmware version 0.8.

NOTE
** This Modbus register may be missing in your gateway since it is only implemented in the 485 series. However, the Virtual Temperature function is not dependent on this register, and it is available in your gateway if its order code is listed in the note at the beginning of this section.

VIRTUAL TEMPERATURE FUNCTION EXAMPLE CASE

Imagine a very cold room with a temperature of 10°C. There's an AC indoor unit mounted in the ceiling, which is very high.

The technician responsible for the BMS wants to raise the room temperature to 20°C. To achieve this, she accesses the console and sets this value in the BACnet object **Setpoint_command (Analog Output)**/Modbus register **Temperature (user) setpoint (protocol address 4 / PLC address 5)**. The same value of “20” is also reflected in the BACnet object **Setpoint_status (Analog Input)**/Modbus register **AC real setpoint (protocol address 23 / PLC address 24)**.

A few minutes later, the technician checks the BACnet object **RoomTemperature_status (Analog Input)**/Modbus register **Indoor unit reference temperature (protocol address 5 / PLC address 6)** to determine the temperature reported by the indoor unit’s sensor, which reads 17°C. However, the BMS sensor in the room reports a temperature of 13°C. The technician knows that the BMS sensor is better positioned than the indoor unit’s sensor. Unfortunately, the indoor unit does not allow the gateway a direct overwriting of the value reported by its sensor temperature. To address this, the technician activates the Virtual Temperature function.

To activate it, she writes the temperature currently perceived by the BMS sensor (13°C) into the BACnet object **RoomTemperature_command (Analog Output)**/Modbus register **Input sensor temperature (protocol address 22 / PLC address 23)**. As soon as she inputs “13” into that object/register, the BACnet object **VirtualTemperatureActive (Binary Input)**/Modbus register **Virtual Temp Active (protocol address 129 / PLC address 130)** transitions from “0” to “1.” This indicates that the Virtual Temperature function is now active and will continuously apply the formula to recalculate the setpoint temperature sent to the indoor unit.

At this moment, the formula values are: 17-(13-20)=24. Therefore, the Virtual Temperature function is currently sending a setpoint of 24°C to the indoor unit, and this value is reflected in the BACnet object **Setpoint_status (Analog Input)**/Modbus register **AC real setpoint (protocol address 23 / PLC address 24)**.

After a few minutes, the technician checks the BACnet object **RoomTemperature_command (Analog Output)**/ Modbus register **Input sensor temperature (protocol address 22 / PLC address 23)** to find the temperature perceived by the BMS sensor: 19°C. Then, she looks at the BACnet object **RoomTemperature_status (Analog Input)**/Modbus register **Indoor unit reference temperature (protocol address 5 / PLC address 6)**, which reports the temperature sensed by the indoor unit: 24°C.

At this point, the formula applied by the Virtual Temperature function is based on these numbers: 24-(19-20)=25. The technician observes the BACnet object **Setpoint_status (Analog Input)**/Modbus register **AC real setpoint (protocol address 23 / PLC address 24)** and realizes that the Virtual Temperature function has established the setpoint at 25°C.

10. Error Codes

10.1. Gateway Codes

Error Code	Error in Remote Controller	Error Description
0	N/A	No active error
-1	N/A	Communication error between the AC unit and the gateway
-4	N/A	Shown during the gateway's startup process

10.2. AC System Codes

Error code	Error in the remote controller	Error category	Error description
16	A0	Indoor Unit	External protection devices activated
17	A1		Indoor unit PCB assembly failure
18	A2		Interlock error for fan
19	A3		Drain level system error
20	A4		Temperature of heat exchanger (1) error
21	A5		Temperature of heat exchanger (2) error
22	A6		Fan motor locked, overload, over current
23	A7		Swing flap motor error
24	A8		Overcurrent of AC input
25	A9		Electronic expansion valve drive error
26	AA		Heater overheat
27	AH		Dust collector error / No-maintenance filter error
29	AJ		Capacity setting error (indoor)
30	AE		Shortage of water supply
31	AF		Malfunctions of a humidifier system (water leaking)
32	C0		Malfunctions in a sensor system
35	C3		Sensor system of drain water error
36	C4		Heat exchanger (1) (Liquid pipe) thermistor system error
37	C5		Heat exchanger (1) (Gas pipe) thermistor system error
38	C6		Sensor system error of fan motor locked, overload
39	C7		Sensor system of swing flag motor error
40	C8		Sensor system of over-current of AC input
41	C9		Suction air thermistor error
42	CA		Discharge air thermistor system error
43	CH		Contamination sensor error
44	CC		Humidity sensor error
45	CJ		Remote control thermistor error
46	CE		Radiation sensor error
47	CF		High-pressure switch sensor
48	E0	Outdoor Unit	Protection devices activated
49	E1		Outdoor unit PCB assembly failure
51	E3		High pressure switch (HPS) activated
52	E4		Low-pressure switch (LPS) activated
53	E5		Overload of inverter compressor motor
54	E6		Over-current of STD compressor motor
55	E7		Overload of fan motor / Over current of fan motor

Error code	Error in the remote controller	Error category	Error description
56	E8		Over-current of AC input
57	E9		Electronic expansion valve drive error
58	EA		Four-way valve error
59	EH		Pump motor over current
60	EC		Water temperature abnormal
61	EJ		(Site installed) Protection device activated
62	EE		Malfunctions in a drain water
63	EF		Ice thermal storage unit error
64	H0		Malfunctions in a sensor system
65	H1		Air temperature thermistor error
66	H2		Sensor system of power supply error
67	H3		High Pressure switch is faulty
68	H4		Low pressure switch is faulty
69	H5		Compressor motor overload sensor is abnormal
70	H6		Compressor motor over current sensor is abnormal
71	H7		Overload or over current sensor of fan motor is abnormal
72	H8		Sensor system of over-current of AC input
73	H9		Outdoor air thermistor system error
74	HA		Discharge air thermistor system error
75	HH		Pump motor sensor system of overcurrent is abnormal
76	HC		Water temperature sensor system error
78	HE		Sensor system of drain water is abnormal
79	HF		Ice thermal storage unit error (alarm)
80	F0		No.1 and No.2 common protection device operates.
81	F1		No.1 protection device operates.
82	F2		No.2 protection device operates
83	F3		Discharge pipe temperature is abnormal
86	F6		Temperature of heat exchanger(1) abnormal
90	FA		Discharge pressure abnormal
91	FH		Oil temperature is abnormally high
92	FC		Suction pressure abnormal
94	FE		Oil pressure abnormal
95	FF		Oil level abnormal
96	J0		Sensor system error of refrigerant temperature
97	J1		Pressure sensor error
98	J2		Current sensor error
99	J3		Discharge pipe thermistor system error
100	J4		Low pressure equivalent saturated temperature sensor system error
101	J5		Suction pipe thermistor system error
102	J6		Heat exchanger(1) thermistor system error
103	J7		Heat exchanger(2) thermistor system error
104	J8		Oil equalizer pipe or liquid pipe thermistor system error
105	J9		Double tube heat exchanger outlet or gas pipe thermistor system error
106	JA		Discharge pipe pressure sensor error
107	JH		Oil temperature sensor error
108	JC		Suction pipe pressure sensor error
110	JE		Oil pressure sensor error
111	JF		Oil level sensor error
112	L0		Inverter system error

Error code	Error in the remote controller	Error category	Error description
115	L3		Temperature rise in a switch box
116	L4		Radiation fin (power transistor) temperature is too high
117	L5		Compressor motor grounded or short circuit, inverter PCB fault
118	L6		Compressor motor grounded or short circuit, inverter PCB fault
119	L7		Over-current of all inputs
120	L8		Compressor over current, compressor motor wire cut
121	L9		Stall prevention error (start-up error) Compressor locked, etc.
122	LA		Power transistor error
124	LC		Communication error between inverter and outdoor control unit
128	P0		Shortage of refrigerant (thermal storage unit)
129	P1		Power voltage imbalance, open phase
131	P3		Sensor error of temperature rise in a switch box
132	P4		Radiation fin temperature sensor error
133	P5		DC current sensor system error
134	P6		AC or DC output current sensor system error
135	P7		Total input current sensor error
141	PJ		Capacity setting error (outdoor)
144	U0	System	Low pressure drop due to insufficient refrigerant or electronic expansion valve error, etc.
145	U1		Reverse phase, Open phase
146	U2		Power voltage failure / Instantaneous power failure
147	U3		Failure to carry out check operation, transmission error
148	U4		Communication error between indoor unit and outdoor unit, communication error between outdoor unit and BS unit
149	U5		Communication error between remote control and indoor unit / Remote control board failure or setting error for remote control
150	U6		Communication error between indoor units
151	U7		Communication error between outdoor units / Communication error between outdoor unit and ice thermal storage unit
152	U8		Communication error between main and sub remote controllers (sub remote control error) / Combination error of other indoor unit / remote control in the same system (model)
153	U9		Communication error between other indoor unit and outdoor unit in the same system / Communication error between other BS unit and indoor/ outdoor unit
154	UA		Combination error of indoor/BS/outdoor unit (model, quantity, etc.), setting error of spare parts PCB when replaced
155	UH		Improper connection of transmission wiring between outdoor and outdoor unit outside control adaptor
156	UC		Centralized address duplicated
157	UJ		Attached equipment transmission error
158	UE		Communication error between indoor unit and centralized control device
159	UF		Failure to carry out check operation Indoor-outdoor, outdoor-outdoor communication error, etc.
208	60	Others	All system error
209	61		PC board error
210	62		Ozone density abnormal
211	63		Contamination sensor error
212	64		Indoor air thermistor system error
213	65		Outdoor air thermistor system error
216	68		HVU error (Venti air dust-collecting unit)
218	6A		Dumper system error
219	6H		Door switch error

Error code	Error in the remote controller	Error category	Error description
220	6C		Replace the humidity element
221	6J		Replace the high-efficiency filter
222	6E		Replace the deodorization catalyst
223	6F		Simplified remote controller error
225	51		Fan motor of supply air over current or overload
226	52		Fan motor of return air over current / Fan motor of return air overload
227	53		Inverter system error (supply air side)
228	54		Inverter system error (return air side)
240	40		Humidifying valve error
241	41		Chilled water valve error
242	42		Hot water valve error
243	43		Heat exchanger of chilled water error
244	44		Heat exchanger of hot water error
Any other	UNKNOWN		UNKNOWN

NOTE
If you detect a non-listed error code, please contact Daikin technical support.