ENGLISH

IN485MHI001R000 GATEWAY

Mitsubishi Heavy Industries Residential and VRF Systems to BACnet MS/TP

USER MANUAL
Version 1.0.8
Publication date 2025-02-11

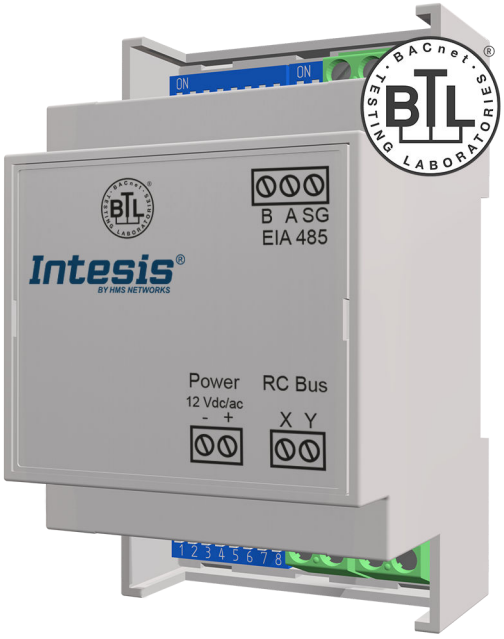

14 rue Edouard Petit
42000 St-Etienne
Tel : +33 477 92 03 56
Email : contact@rg2i.com
www.rg2i.com

Copyright © 2025 Intesis

Disclaimer

The information in this document is for informational purposes only. Please inform HMS Networks of any inaccuracies or omissions found in this document. HMS Networks disclaims any responsibility or liability for any errors that may appear in this document.

HMS Networks reserves the right to modify its products in line with its policy of continuous product development. The information in this document shall therefore not be construed as a commitment on the part of HMS Networks and is subject to change without notice. HMS Networks makes no commitment to update or keep current the information in this document.

The data, examples and illustrations found in this document are included for illustrative purposes and are only intended to help improve understanding of the functionality and handling of the product. In view of the wide range of possible applications of the product, and because of the many variables and requirements associated with any particular implementation, HMS Networks cannot assume responsibility or liability for actual use based on the data, examples or illustrations included in this document nor for any damages incurred during installation of the product. Those responsible for the use of the product must acquire sufficient knowledge in order to ensure that the product is used correctly in their specific application and that the application meets all performance and safety requirements including any applicable laws, regulations, codes and standards. Further, HMS Networks will under no circumstances assume liability or responsibility for any problems that may arise as a result from the use of undocumented features or functional side effects found outside the documented scope of the product. The effects caused by any direct or indirect use of such aspects of the product are undefined and may include e.g. compatibility issues and stability issues.

Table of Contents

1. Description, Compatible AC systems, and Order Codes 1

2. General Information 2

2.1. Intended Use of the User Manual 2
2.2. General Safety Information 2
2.3. Admonition Messages and Symbols 3

3. Quickstart Guide for the IN485MHI001R000 Gateway 4

4. Overview 5

4.1. Inside the Package 5
4.2. Main Features 5
4.3. Gateway Capacity 6
4.4. General Functionality 6

5. Hardware 7

5.1. Mounting 7
5.2. Connection Procedure 8
5.3. Coexistence of the Gateway with a Remote Controller 10
5.4. Connection to an External Power Supply 11
5.5. DIP switches 11
5.6. LED Indicators 14
5.7. Technical Specifications 15
5.8. Dimensions 15

6. Restore the Factory Settings 16

7. Objects 17

7.1. Supported Object Types 17
7.2. Member Objects 17
7.2.1. Type: Gateway 17
7.2.2. Type: Indoor Unit 17
7.3. Objects and Properties 18
7.3.1. Mitsubishi Heavy Industries AC Gateway (Device Object Type) 18
7.3.2. OnOff_status (Binary Input Object Type) 20
7.3.3. OnOff_command (Binary Output Object Type) 21
7.3.4. Mode_status (Multistate Input Object Type) 22
7.3.5. Mode_command (Multistate Output Object Type) 23
7.3.6. Setpoint_status (Analog Input Object Type) 24
7.3.7. Setpoint_command (Analog Output Object Type) 25
7.3.8. VirtualTempActive (Binary Input Object Type) 26
7.3.9. FanSpeed_status (Multistate Input Object Type) 27
7.3.10. FanSpeed_command (Multistate Output Object Type) 28
7.3.11. AirDirectionUD_status (Multistate Input Object Type) 29
7.3.12. AirDirectionUD_command (Multistate Output Object Type) 30
7.3.13. RoomTemperature_status (Analog Input Object Type) 31
7.3.14. RoomTemperature_command (Analog Output Object Type) 32
7.3.15. ErrorCode (Analog Input Object Type) 33
7.3.16. ErrorCodeM (Multistate Input Object Type) 34
7.3.17. ErrorActive (Binary Input Object Type) 35
7.3.18. ErrorAddress (Analog Input Object Type) 36
7.3.19. ErrorReset (Binary Output Object Type) 37
7.3.20. OnTimeCounter (Analog Value Object Type) 38

7.3.21. FilterSign (Binary Input Object Type) 39
7.3.22. FilterReset (Binary Output Object Type) 40
7.3.23. Occupancy (Multistate Value Object Type) 41
7.3.24. OccupiedCoolSetPoint (Analog Value Object Type) 42
7.3.25. OccupiedHeatSetPoint (Analog Value Object Type) 43
7.3.26. UnoccupiedCoolSetPoint (Analog Value Object Type) 44
7.3.27. UnoccupiedHeatSetPoint (Analog Value Object Type) 45
7.3.28. OccupancyContinuousCheck (Binary Value Object Type) 46
7.3.29. UnoccupiedDeadbandAction (Binary Value Object Type) 47
7.3.30. LockRemoteControl (Binary Value Object Type) 48
7.3.31. OutdoorTemp_status (Analog Input Object Type) 49
7.3.32. CenterRemote (Multistate Input Object Type) 50
7.3.33. DIP_SW_S1_status (Analog Input Object Type) 51
7.3.34. DIP_SW_S2_status (Analog Input Object Type) 52
7.3.35. SerialNumber (Analog Input Object Type) 53

8. Occupancy Function 54

9. Ambient Temperature and Virtual Temperature Function 56
9.1. Considerations on Temperature Signals 60

10. Error Codes 62

1. Description, Compatible AC systems, and Order Codes

BACnet MS/TP gateway for Mitsubishi Heavy Industries air conditioners.

Compatible with residential and VRF air conditioning systems commercialized by Mitsubishi Heavy Industries.

Use the compatibility tool to get a complete list of compatible units: https://compatibility.intesis.com/

ORDER CODE	LEGACY ORDER CODE
IN485MHI001R000	INBACMHI001R100

2. General Information

2.1. Intended Use of the User Manual

This manual contains the main features of this Intesis gateway and the instructions for its appropriate installation, configuration, and operation.

Any person who installs, configures, or operates this gateway or any associated equipment should be aware of this manual's contents.

Keep this manual for future reference during the installation, configuration, and operation.

2.2. General Safety Information

IMPORTANT
Follow these instructions carefully. Improper work may seriously harm your health and damage the gateway and/or any other equipment connected to it.

Only technical personnel, following these instructions and the country legislation for installing electrical equipment, can install and manipulate this gateway.

Install this gateway indoors, in a restricted access location, avoiding exposure to direct solar radiation, water, high relative humidity, or dust.

Preferably, mount this gateway on a DIN rail inside a grounded metallic cabinet, following the instructions in this manual.

If mounting on a wall, firmly fix this gateway on a non-vibrating surface, following the instructions in this manual.

All wires (for communication and power supply, if needed) must only be connected to networks with indoor wiring. All communication ports are considered for indoor use and must only be connected to SELV circuits.

Disconnect all systems from power before manipulating and connecting them to the gateway.

Use a circuit breaker between the gateway and the power supply. Rating: 250 V, 6 A.

Supply the correct voltage to power the gateway. The admitted range is detailed in the technical specifications table.

Respect the expected polarity of power and communication cables when connecting them to the gateway.

This Intesis gateway is designed for installation in an enclosure. When the device is mounted outside an enclosure, precautions should be taken to avoid electrostatic discharges to the unit in environments with static levels above 4 kV. When working in an enclosure (e.g., making adjustments, setting switches, etc.), typical anti-static precautions should be observed before touching the unit.

Binary inputs, if present, are potential-free contact. Do not connect any voltage.

Safety instructions in other languages can be found here.

2.3. Admonition Messages and Symbols

CAUTION
Instruction that must be followed to avoid a potentially hazardous situation that, if not avoided, could result in minor or moderate injury.

IMPORTANT
Instruction that must be followed to avoid a risk of reduced functionality and/or damage to the equipment or to avoid a network security risk.

NOTE
Additional information which may facilitate installation and/or operation.

TIP
Helpful advice and suggestions.

NOTICE
Remarkable Information.

3. Quickstart Guide for the IN485MHI001R000 Gateway

CAUTION
Disconnect all systems from power before connecting them to the gateway.

1. Mount the gateway in the desired installation site. This gateway can be mounted over a DIN rail or a wall. See details in Mounting (page 7).

   NOTE
   DIN rail mounting inside a grounded cabinet or metal enclosure is recommended.

2. Configure the gateway using the built-in DIP switches. See details in DIP switches (page 11).
3. Connect the gateway to the BACnet network via its **EIA-485** port.
4. Connect the gateway to the wired remote controller bus (XY). See details in Connection Procedure (page 8).
5. Check the communication performance between the BACnet bus and the AC system through the gateway's LED indicators. See details in LED Indicators (page 14).
6. The Intesis gateway is ready to be used in your system.

4. Overview

Figure 1. Integration of Mitsubishi Heavy Industries AC units into a BACnet installation using the Intesis IN485MHI001R000 gateway

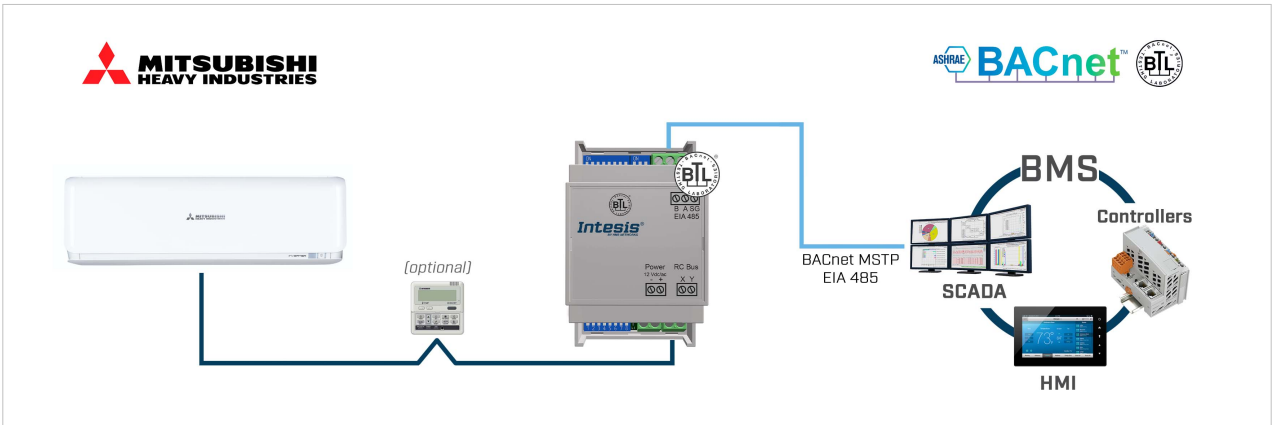

NOTE
This document assumes that the user is familiar with BACnet and Mitsubishi Heavy Industries technologies and their technical terms.

4.1. Inside the Package

Items included:

- Intesis IN485MHI001R000 gateway
- Installation guide

4.2. Main Features

- BTL mark ensures full interoperability with BACnet devices.
- Configuration with onboard DIP switches.
- Quick and easy installation: Set the DIP switches, plug, and play.
- External power supply not required.
- Simultaneous control of the AC unit via both the remote controller and the BMS (BACnet MS/TP).
- Reduced dimensions (HxWxD): 93 x 53 x 58 mm / 3.7 x 2.1 x 2.3”.
- Mountable on DIN rail, wall, or even inside the indoor unit in some models of AC.
- Significant reduction of the HVAC system energy consumption.
- Three-year warranty.

4.3. Gateway Capacity

This Intesis gateway can integrate one single Mitsubishi Heavy Industries AC indoor unit and its associated elements.

4.4. General Functionality

With this Intesis IN485MHI001R000 gateway, you can easily integrate Mitsubishi Heavy Industries residential and VRF air conditioning systems into a system based on BACnet MS/TP. To do so, the gateway acts as a server device of the installation itself, accessing all signals from the AC indoor unit.

The gateway is continuously polling the AC unit, storing in its memory the current status of every signal you want to track and serving this data to the control system when requested. The gateway also sends the requested commands to the indoor unit.

5. Hardware

5.1. Mounting

Mount the gateway over a wall or over a DIN rail.

IMPORTANT
Do not mount the gateway in air-handling units or conducts.

NOTE
DIN rail mounting inside a grounded metallic cabinet is recommended.

Wall mounting

1. Press the rear panel clips outwards until you hear a *click*.
2. Use the clip holes to screw the gateway to the wall.
3. Make sure the gateway is firmly fixed.

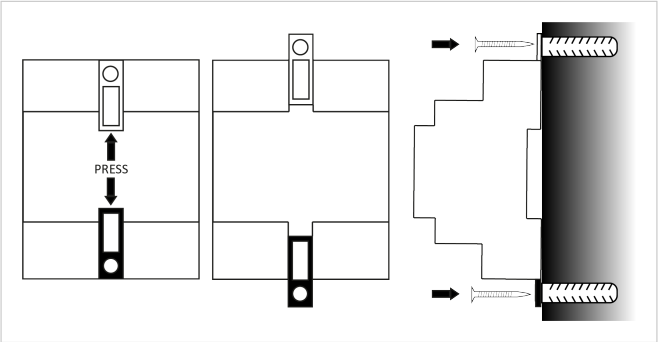

DIN rail mounting

Keep the clips in its original position.

1. Fit the gateway's top-side clip in the upper edge of the DIN rail.
2. Press the low side of the gateway gently to lock it in the DIN rail.
3. Make sure the gateway is firmly fixed.

NOTE
For some DIN rails, to complete step 2, you may need a small screwdriver or similar to pull the bottom clip down.

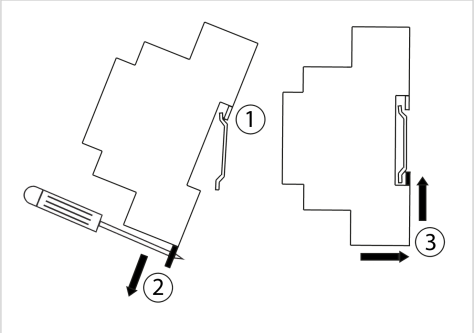

5.2. Connection Procedure

CAUTION
Disconnect all systems from power before connecting them to the gateway.

IMPORTANT
Keep communication cables as far away as possible from power and ground cables. Never bundle them together.

NOTE
Mount the gateway in the desired place before wiring it.

Figure 2. Wiring diagram

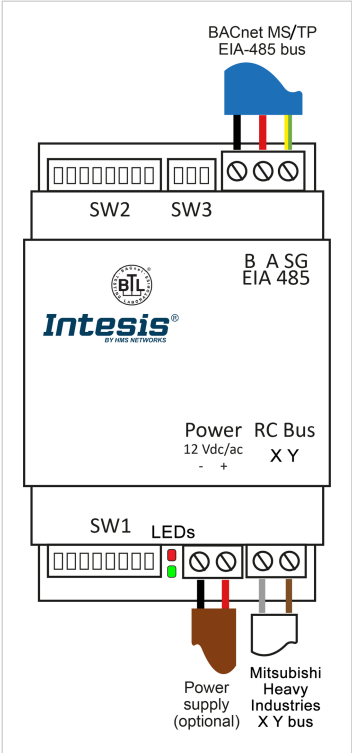

Connection to the wired remote controller (RC) bus

NOTE
Mount the gateway in the desired place before wiring it.

1. Connect the gateway at any point of the XY bus.

NOTE
- The XY bus is a two-wire bus used to connect the indoor unit and a wired RC .
- This connection has no specific polarity.
- The maximum length for the RC bus is 600 m (1968 ft).

Connection to the BACnet MS/TP bus

2. Connect the BACnet MS/TP bus to the EIA-485 port of the gateway.

IMPORTANT
Observe polarity: B-, A+, and SG for signal ground.

IMPORTANT

- EIA-485 bus doesn't allow loop or star topologies.
- Maximum length for the EIA-485 bus is 1200 meters (4000 feet).

EIA-485 BUS. TERMINATION RESISTORS AND FAIL-SAFE BIASING MECHANISM
The EIA-485 bus requires a 120Ω terminator resistor at each end of the bus to avoid signal reflections.

In order to prevent fail status detections by the receivers, which are "listening" to the bus, when all the transmitters' outputs are in three-state (high impedance), a fail-safe biasing mechanism is required. This mechanism provides a safe status (a correct voltage level) in the bus when all the transmitters' outputs are in three-state.

The IN485MHI001R000 gateway includes an on-board terminator resistor of 120Ω that can be connected to the EIA-485 bus by using DIP switch SW3.

- **SW3, Position 1:**
  ON: 120 Ω termination active.
  OFF: 120 Ω termination inactive (default position).

Some BACnet MS/TP EIA-485 Master devices can provide also internal 120Ω terminator resistor and/or fail-safe biasing. Consult the technical documentation of the Master device connected to the EIA-485 network in each case.

If the termination resistor is enabled and you install the gateway at one of the ends of the bus, do not install an additional termination resistor at that end.

3. Reconnect all systems to power.

5.3. Coexistence of the Gateway with a Remote Controller

If there is a wired remote controller (RC) connected to the indoor unit, you must set the roles for both the wired RC and the gateway:

- Set the wired RC as the header[1] and the gateway as the follower[1].
- Set the wired RC as the follower and the gateway as the header.

NOTE
[1] We use the terms header and follower to designate the roles also known as master and slave or main and sub.

NOTE
By default, the factory settings designate the gateway as the follower. Use the SW1-1 (DIP switch 1, position 1) to configure the gateway's role. See DIP switches (page 11).

NOTE
Refer to the documentation provided with the Mitsubishi Heavy Industries indoor unit to know the needed procedure to set the role of the wired RC.

IMPORTANT
If no wired RC is present in the installation, set the gateway as the header.

NOTE
Although it is not mandatory, we recommend connecting a wired RC in the bus since it may be necessary to establish proper communication between the gateway and some indoor units.

IMPORTANT
The roles of the gateway and the wired RC affect certain functions, such as using a temperature sensor from the BMS side or the Virtual Temperature function. To know more, see Ambient Temperature and Virtual Temperature Function (page 56).

5.4. Connection to an External Power Supply

IMPORTANT
In most cases, this gateway is powered through the remote controller bus itself, and there is no need to connect an external power supply. However, depending on the number and type of remote controllers installed, the bus could not supply the needed power.

TIP
Some signs indicating there is not enough power in the bus may include, for example, a malfunction of the remote controllers' display or in its performance.

If that's the case, connect a 12 VDC/AC SELV-rated NEC class 2 or Limited Power Source (LPS) power supply in the gateway's Power connector.

IMPORTANT
Respect polarity.

Figure 3. Power connector

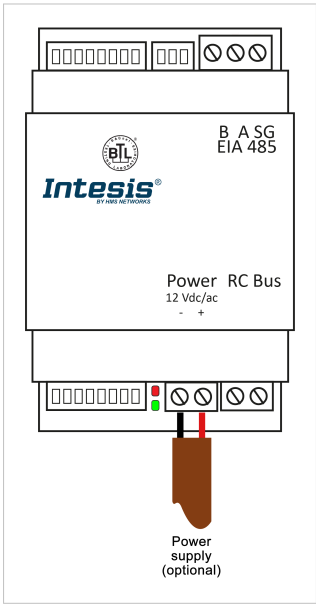

5.5. DIP switches

The gateway includes three DIP switches: SW1 (8 switches) at the bottom and SW2 (8 switches) and SW3 (3 switches) at the top.

IMPORTANT
The DIP switches configuration will only take effect after rebooting the gateway.

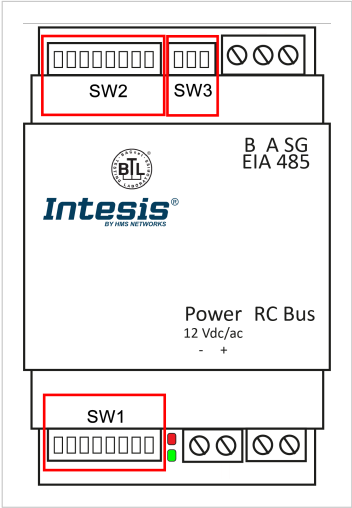

Table 1. SW1 (P1): Gateway configuration; (P6 to P8): BACnet MS/TP baudrate

Binary value	Switches								Description
b0 .. b7	1	2	3	4	5	6	7	8	
0 X X X X X X X	OFF	X	X	X	X	X	X	X	Follower in XY bus (default)
1 X X X X X X X	ON	X	X	X	X	X	X	X	Header in XY bus
X X X X X 0 0 0	X	X	X	X	X	OFF	OFF	OFF	Autobaudrate (default value)
X X X X X 1 0 0	X	X	X	X	X	ON	OFF	OFF	9600 bps
X X X X X 0 1 0	X	X	X	X	X	OFF	ON	OFF	19200 bps
X X X X X 1 1 0	X	X	X	X	X	ON	ON	OFF	38400 bps
X X X X X 0 0 1	X	X	X	X	X	OFF	OFF	ON	57600 bps
X X X X X 1 0 1	X	X	X	X	X	ON	OFF	ON	76800 bps
X X X X X 0 1 1	X	X	X	X	X	OFF	ON	ON	115200 bps
X X X X X 1 1 1	X	X	X	X	X	ON	ON	ON	Autobaudrate

NOTE

If **Autobaudrate** is selected, the gateway will scan the network to find any other BACnet MS/TP device and will match its baudrate. Once detected, the baudrate will only be modified after a reset/ reboot of the gateway.

Table 2. SW2 (P1 to P7): BACnet MS/TP MAC address; (P8): Temperature unit (°C/°F)

Binary value	Switches								MAC address	Description
b0 .. b7	1	2	3	4	5	6	7	8		
0 0 0 0 0 0 0 X	OFF	OFF	OFF	OFF	OFF	OFF	OFF	X	0	-
1 0 0 0 0 0 0 X	ON	OFF	OFF	OFF	OFF	OFF	OFF	X	1	-
0 1 0 0 0 0 0 X	OFF	ON	OFF	OFF	OFF	OFF	OFF	X	2	-
1 1 0 0 0 0 0 X	ON	ON	OFF	OFF	OFF	OFF	OFF	X	3	-
...	...							...	...	-
1 0 1 1 1 1 1 X	ON	OFF	ON	ON	ON	ON	ON	X	125	-
0 1 1 1 1 1 1 X	OFF	ON	ON	ON	ON	ON	ON	X	126	-
1 1 1 1 1 1 1 X	ON	ON	ON	ON	ON	ON	ON	X	127	-
X X X X X X X 0	X	X	X	X	X	X	X	OFF	-	Temperature values in BACnet are represented in Celsius degrees (default value)
X X X X X X X 1	X	X	X	X	X	X	X	ON	-	Temperature values in BACnet are represented in Fahrenheit degrees

NOTE
By default, the **Device instance** base is 246000. Setting the SW2 switches, you can add from 0 to 127, so the final Device instance address can be from 246000 to 246127.

IMPORTANT
If you overwrite the **Device instance** object from the BMS side (for example, using the control terminal), this function to set up the **Device instance** with the SW2 switches will be deactivated. To activate this function again, a factory reset is needed.

Table 3. SW3 (P1 to P3): BACnet polarization and termination resistor

Binary value	Switches			Description
b0 .. b2	1	2	3	
0 X X	OFF	X	X	EIA-485 bus without termination resistor. The gateway is not at one end of the EIA-485 bus (default value)
1 X X	ON	X	X	120 Ω termination resistor active. The gateway is at one end of the EIA-485 bus
X 0 0	X	OFF	OFF	No bus polarization (default value)
X 1 1	X	ON	ON	Bus polarization active

5.6. LED Indicators

There are two LEDs at the lower side of the gateway, between the DIP switch block SW1 and the **Power** connector.

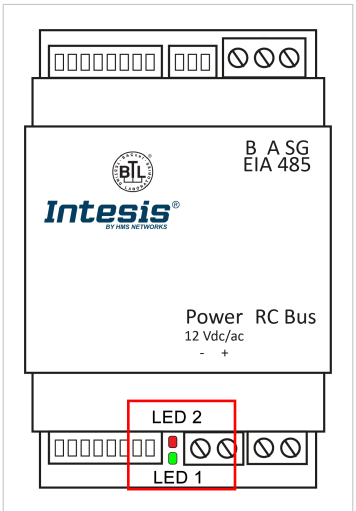

When powering the gateway up, both LEDs blink once and then turn off. After that, LEDs will behave as described in the table below:

Table 4. LED status table

LED	Status	Description
L1 Green BACnet	ON	BACnet MS/TP link performed
	Flickering	Activity on the BACnet MS/TP bus
	OFF	BACnet MS/TP link not performed
L2 Red AC unit	ON	AC communication error
	Blinking	AC unit error
	Flashing	AC communication OK

LED PATTERNS

- **ON**: 100% on
- **Flickering**: irregular cycle (90% on - 10% off approx)
- **Blinking**: 50% on - 50% off
- **Flashing**: 10% on - 90% off
- **OFF**: 100% off

5.7. Technical Specifications

Housing	Plastic, type PC (UL 94 V-0) Net dimensions (HxWxD): 93 x 53 x 58 mm / 3.7 x 2.1 x 2.3” Color: Light grey. RAL 7035
Weight	85 g (3 oz)
Terminal wiring	Wire cross-section/gauge per terminal: One core: 0.2 .. 2.5 mm^2 (24 .. 11 AWG) Two cores: 0.2 .. 1.5mm^2 (24 .. 15 AWG) Three cores: Not permitted Use solid or stranded wires (twisted or with ferrule).
External power supply (optional)	SELV-rated NEC class 2 or limited power source (LPS) power supply 12 VDC/AC; 0.1 A
Mounting	Wall, DIN rail, or inside the indoor unit
EIA-485 port **BACnet MS/TP**	1 x pluggable terminal block (3 poles: B, A, and SG)
AC unit port	1 x RC bus pluggable terminal block (2 poles)
LED indicators	2 x Communication status
DIP switches	SW1: Gateway and baudrate configuration SW2: MAC address and temperature unit SW3: Bus polarization and termination
Operational and storage temperature	Celsius: Op: 0 to +70°C; St: -20 to 85°C Fahrenheit: Op: 32 to 158°F; St: -4 to 185°F
Operational and storage humidity	5% to 95% RH non-condensing
Isolation Voltage	1500 VDC
Isolation resistance	1000 MΩ

5.8. Dimensions

Net dimensions (HxWxD):

Millimeters: 93 x 53 x 58 mm

Inches: 3.66 x 2.08 x 2.28"

IMPORTANT
Leave enough clear space to wire the gateway easily and for the subsequent manipulation of elements such as connectors, DIP switches, etc.

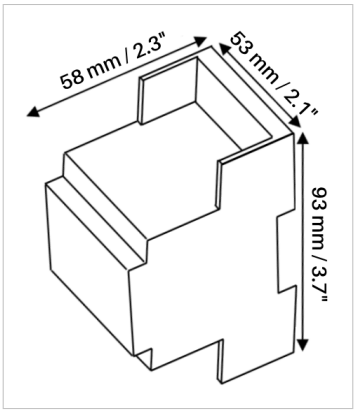

6. Restore the Factory Settings

To restore the gateway to its factory settings, proceed as follows:

1. Set all switches from DIP switches SW1 and SW2 to **ON**.
2. Reboot the gateway:
   a. Power it OFF.
   b. Power it ON.

   NOTE
   To turn the gateway OFF, disconnect it from the AC unit and from the power supply, if there is one. To turn the gateway ON, reestablish those connections.

3. After the reboot, LEDs will blink with the SOS Morse sequence:
   a. Three short blinks
   b. Three longer blinks
   c. Three short blinks
4. Set all switches from DIP switches SW1 and SW2 to **OFF** within 30 seconds.

   IMPORTANT
   If you take longer than 30 seconds, all LEDs will turn off, meaning that the procedure has failed. To retry it, go to step 1 and begin the procedure again.

After this procedure, the LED will flash red, meaning that the gateway has been restored to the factory settings.

7. Objects

7.1. Supported Object Types

Object type	ID
Analog-Input	0
Analog-Output	1
Analog-Value	2
Binary-Input	3
Binary-Output	4
Binary-Value	5
Device	8
Multistate-Input	13
Multistate-Output	14
Multistate-Value	19

7.2. Member Objects

7.2.1. Type: Gateway

Object name	Description	Object type	Object instance
IN485MHI001R000	Mitsubishi Heavy Industries RC gateway	8: Device	246000 (default)

7.2.2. Type: Indoor Unit

Object name	Object type	Object instance
OnOff_status	BI	0
OnOff_command	BO	0
Mode_status	MI	0
Mode_command	MO	0
Setpoint_status	AI	0
User_Setpoint_status	AI	17
Setpoint_command	AO	0
VirtualTempActive	BI	14
FanSpeed_status	MI	1
FanSpeed_command	MO	1
AirDirectionUD_status	MI	2
AirDirectionUD_command	MO	2
RoomTemperature_status	AI	1
RoomTemperature_command	AO	1
ErrorCode	AI	2
ErrorCodeM	MI	4
ErrorActive	BI	1
ErrorAddress	AI	2
ErrorReset	BO	5
OnTimeCounter	AV	0
FilterSign	BI	6
FilterReset	BO	4

Object name	Object type	Object instance
Occupancy	MV	0
OccupiedCoolSetpoint	AV	1
OccupiedHeatSetpoint	AV	2
UnoccupiedCoolSetpoint	AV	3
UnoccupiedHeatSetpoint	AV	4
OccupancyContinuousCheck	BV	0
UnoccupiedDeadBandAction	BV	1
LockRemoteControl	BV	2
OutdoorTemp_status	AI	8
CenterRemote	MI	9
DIP_SW_S1_status	AI	9
DIP_SW_S2_status	AI	10
SerialNumber	AI	11

7.3. Objects and Properties

7.3.1. Mitsubishi Heavy Industries AC Gateway (Device Object Type)

Object_Identifier: The gateway can be identified in the BACnet network either manually or automatically:

- **Automatic address (default)**: The gateway address is generated by combining the base address + the local address configured in the DIP switch block SW2 (P1 to P7). See DIP switches (page 11).
- **Manual address**: The gateway will switch to manual addressing mode when this property receives a value from the BACnet side.

IMPORTANT
During the manual addressing mode, the address configured with the DIP switch SW2 is not considered.

IMPORTANT
If **Object_Identifier** is overwritten from BACnet, the DIP switch SW2 configuration will not be considered for the device instance calculation until a **Restore factory settings** is performed. See details in Restore the Factory Settings (page 16).

The **Object_Identifier**, **Object_Name**, and **Description** properties can be edited by writing on their **Value**.

NOTE
The **Description** value permits up to 63 characters.

Property Identifier	Property Datatype	Value	ASHRAE	Intesis
Object_Identifier	BACnetObjectIdentifier	Device, 246000 (default value)	R	W
Object_Name	CharacterString	IN485MHI001R000	R	W
Object_Type	BACnetObjectType	DEVICE (8) (Device Object Type)	R	R
System_Status	BACnetDeviceStatus	OPERATIONAL (0)	R	R
Vendor_Name	CharacterString	HMS Industrial Networks SLU	R	R
Vendor_Identifier	Unsigned16	246	R	R
Model_Name	CharacterString	IN485MHI001R000	R	R
Firmware_Revision	CharacterString	1.0.0.0	R	R
Application_Software_ Version	CharacterString	1.0.0.0	R	R
Location	CharacterString	""	O	-

Property Identifier	Property Datatype	Value	ASHRAE	Intesis
Description	CharacterString	Mitsubishi Heavy Industries AC interface	O	W
Protocol_Version	Unsigned	1	R	R
Protocol_Revision	Unsigned	12	R	R
Protocol_Services_ Supported	BACnetServiceSupported	Refer to the PICS document	R	R
Protocol_Object_Types_ Supported	BACnetObjectTypes Supported	Refer to section Objects and Properties (page 18)	R	R
Object_List	BACnetArray[N] of BACnetObjectIdentifier	BACnetARRAY[N]	R	R
Structured_Object_List	BACnetArray[N] of BACnetObjectIdentifier	-	O	-
Max_APDU_Length_ Accepted	Unsigned	480 for BACnet MS/TP 1476 for BACnet/IP	R	R
Segmentation_Supported	BACnetSegmentation	SEGMENTED-BOTH (0)	R	R
Max_Segments_accepted	Unsigned	16	O	R
VT_Classes_Supported	List of BACnetVTClass	-	O	-
Active_VT_Sessions	List of BACnetVTSession	-	O	-
Local_Date	Date	-	O	-
Local_Time	Time	-	O	-
UTC_Offset	INTEGER	-	O	-
Daylight_Savings_Status	BOOLEAN	-	O	-
APDU_Segment_Timeout	Unsigned	3000	R	R
APDU_Timeout	Unsigned	3000	R	R
Number_of_APDU_ Retries	Unsigned	3	R	R
List_Of_Session_Keys	List of BACnetSessionKey	-	O	-
Time_Synchronization_ Recipients	List of BACnetRecipient	-	O	-
Max_Master	Unsigned	127	R	W
Max_Info_Frames	Unsigned	1	O	R
Device_Address_Binding	List of BACnetAddressBinding	NULL (empty)	R	R
Database_Revision	Unsigned	0	R	R
Configuration_Files	BACnetArray[N] of BACnetObjectIdentifier	-	O	-
Last_Restore_Time	BACnetTimeStamp	-	O	-
Backup_Failure_Timeout	Unsigned16	-	O	-
Active_COV_ Subscriptions	List of BACnetCOVSubscription	List of BACnetCOVSubscription	O	R
Slave_Proxy_Enable	BACnetArray[N] of BOOLEAN	-	O	-
Manual_Slave_Address_ Binding	List of BACnetAddressBinding	-	O	-
Auto_Slave_Discovery	BACnetArray[N] of BOOLEAN	-	O	-
Slave_Address_Binding	BACnetAddressBinding	-	O	-
Last_Restart_Reason	BACnetRestartReason	-	O	-
Time_Of_Device_Restart	BACnetTimeStamp	-	O	-
Restart_Notification_ Recipients	List of BACnetRecipient	-	O	-
UTC_Time_ Synchronization_ Recipients	List of BACnetRecipient	-	O	-
Time_Synchronization_ Interval	Unsigned	-	O	-
Align_Intervals	BOOLEAN	-	O	-
Interval_Offset	Unsigned	-	O	-
Profile_Name	CharacterString	-	O	-

7.3.2. OnOff_status (Binary Input Object Type)

It indicates if the indoor unit is turned on or off.

Property Identifier	Property Datatype	Value	ASHRAE	Gateway
Object_Identifier	BACnetObjectIdentifier	(Binary Input, 0)	R	R
Object_Name	CharacterString	OnOff_status	R	R
Object_Type	BACnetObjectType	BINARY_INPUT (3)	R	R
Present_Value	BACnetBinaryPV	INACTIVE (0) / ACTIVE (1)	R	R
Description	CharacterString	-	O	-
Device_Type	CharacterString	-	O	-
Status_Flags	BACnetStatusFlags	{FALSE, FALSE/TRUE, FALSE, FALSE}	R	R
Event_State	BACnetEventState	STATE_NORMAL (0)	R	R
Reliability	BACnetReliability	NO_FAULT_DETECTED (0), UNRELIABLE_OTHER (7)	O	R
Out_Of_Service	BOOLEAN	FALSE	R	R
Polarity	BACnetPolarity	NORMAL (0)	R	R
Inactive_Text	CharacterString	Off	O	R
Active_Text	CharacterString	On	O	R
Change_Of_State_Time	BACnetDatetime	-	O	-
Change_Of_State_Count	Unsigned	-	O	-
Time_Of_State_Count_Reset	BACnetDatetime	-	O	-
Elapsed_Active_Time	Unsigned	-	O	-
Time_Of_Active_Time_Reset	BACnetDatetime	-	O	-
Time_Delay	Unsigned	-	O	-
Notification_Class	Unsigned	-	O	-
Alarm_Value	BACnetBinaryPV	-	O	-
Event_Enable	BACnetEventTransitionBits	-	O	-
Acked_Transitions	BACnetEventTransitionBits	-	O	-
Notify_Type	BACnetNotifyType	-	O	-
Event_Time_Stamps	BACnetArray[N] of BACnetTimeStamp	-	O	-
Profile_Name	CharacterString	-	O	-

7.3.3. OnOff_command (Binary Output Object Type)

It turns the indoor unit on or off.

Property Identifier	Property Datatype	Value	ASHRAE	Gateway
Object_Identifier	BACnetObjectIdentifier	(Binary Output, 0)	R	R
Object_Name	CharacterString	OnOff_command	R	R
Object_Type	BACnetObjectType	BINARY_OUTPUT (4)	R	R
Present_Value	BACnetBinaryPV	INACTIVE (0) / ACTIVE (1)	R	W
Description	CharacterString	-	O	-
Device_Type	CharacterString	-	O	-
Status_Flags	BACnetStatusFlags	{FALSE, FALSE, FALSE, FALSE}	R	R
Event_State	BACnetEventState	STATE_NORMAL (0)	R	R
Reliability	BACnetReliability	NO_FAULT_DETECTED (0)	O	R
Out_Of_Service	BOOLEAN	FALSE	R	R
Polarity	BACnetPolarity	NORMAL (0)	R	R
Inactive_Text	CharacterString	Off	O	R
Active_Text	CharacterString	On	O	R
Change_Of_State_Time	BACnetDatetime	-	O	-
Change_Of_State_Count	Unsigned	-	O	-
Time_Of_State_Count_Reset	BACnetDatetime	-	O	-
Elapsed_Active_Time	Unsigned	-	O	-
Time_Of_Active_Time_Reset	BACnetDatetime	-	O	-
Minimum_Off_Time	Unsigned32	-	O	-
Minimum_On_Time	Unsigned32	-	O	-
Priority_Array	BACnetPriorityArray	BACnetPriorityArray	R	R
Relinquish_Default	BACnetBinaryPV	INACTIVE (0)	R	R
Time Delay	Unsigned	-	O	-
Notification_Class	Unsigned	-	O	-
Feedback_Value	BACnetBinaryPV	-	O	-
Event_Enable	BACnetEventTransitionBits	-	O	-
Acked_Transitions	BACnetEventTransitionBits	-	O	-
Notify_Type	BACnetNotifyType	-	O	-
Event_Time_Stamps	BACnetArray[N] of BACnetTimeStamp	-	O	-
Profile_Name	CharacterString	-	O	-

7.3.4. Mode_status (Multistate Input Object Type)

It indicates the indoor unit's current mode.

Property Identifier	Property Datatype	Value	ASHRAE	Gateway
Object_Identifier	BACnetObjectIdentifier	(Multistate Input, 0)	R	R
Object_Name	CharacterString	Mode_status	R	R
Object_Type	BACnetObjectType	MULTISTATE_INPUT (13)	R	R
Present_Value	Unsigned	1 .. 5	R	R
Description	CharacterString	-	O	-
Device_Type	CharacterString	-	O	-
Status_Flags	BACnetStatusFlags	{FALSE, FALSE/TRUE, FALSE, FALSE}	R	R
Event_State	BACnetEventState	STATE_NORMAL (0)	R	R
Reliability	BACnetReliability	NO_FAULT_DETECTED (0), UNRELIABLE_OTHER(7)	O	R
Out_Of_Service	BOOLEAN	FALSE	R	R
Number_Of_States	Unsigned	5	R	R
State_Text	BACnetArray[N] of CharacterString	Check the **Mode status table** below.	O	R
Time_Delay	Unsigned	-	O	-
Notification_Class	Unsigned	-	O	-
Alarm_Values	List of Unsigned	-	O	-
Fault_Values	List of Unsigned	-	O	-
Event_Enable	BACnetEventTransitionBits	-	O	-
Acked_Transitions	BACnetEventTransitionBits	-	O	-
Notify_Type	BACnetNotifyType	-	O	-
Event_Time_Stamps	BACnetArray[N] of BACnetTimeStamp	-	O	-
Profile_Name	CharacterString	-	O	-

Table 5. Mode status

Present_Value	State_Text
1	Heat
2	Cool
3	Fan
4	Dry
5	Auto
6	AutoHeat
7	AutoCool

NOTE

When setting the control mode in Auto, the AC unit itself decides the appropriate mode.

7.3.5. Mode_command (Multistate Output Object Type)

It sets the AC indoor unit's mode.

Property Identifier	Property Datatype	Value	ASHRAE	Gateway
Object_Identifier	BACnetObjectIdentifier	(Multistate Output,0)	R	R
Object_Name	CharacterString	Mode_command	R	R
Object_Type	BACnetObjectType	MULTISTATE_OUTPUT (14)	R	R
Present_Value	Unsigned	1 .. 5	R	W
Description	CharacterString	-	O	-
Device_Type	CharacterString	-	O	-
Status_Flags	BACnetStatusFlags	{FALSE, FALSE, FALSE, FALSE}	R	R
Event_State	BACnetEventState	STATE_NORMAL (0)	R	R
Reliability	BACnetReliability	NO_FAULT_DETECTED (0)	O	R
Out_Of_Service	BOOLEAN	FALSE	R	R
Number_Of_States	Unsigned	5	R	R
State_Text	BACnetArray[N] of CharacterString	Check the **Mode command table** below	O	R
Priority_Array	BACnetPriorityArray	BACnetPriorityArray	R	R
Relinquish_Default	Unsigned	1	R	R
Time_Delay	Unsigned	-	O	-
Notification_Class	Unsigned	-	O	-
Feedback_Value	Unsigned	-	O	-
Event_Enable	BACnetEventTransitionBits	-	O	-
Acked_Transitions	BACnetEventTransitionBits	-	O	-
Notify_Type	BACnetNotifyType	-	O	-
Event_Time_Stamps	BACnetArray[N] of BACnetTimeStamp	-	O	-
Profile_Name	CharacterString	-	O	-

Table 6. Mode command

Present_Value	State_Text
1	Heat
2	Cool
3	Fan
4	Dry
5	Auto

NOTE

When setting the control mode in Auto, the AC unit itself decides the appropriate mode.

7.3.6. Setpoint_status (Analog Input Object Type)

It reports the temperature setpoint requested to the indoor unit.

NOTE
To know more, see Considerations on Temperature Signals (page 60).

Property Identifier	Property Datatype	Value	ASHRAE	Gateway
Object_Identifier	BACnetObjectIdentifier	(Analog Input, 0)	R	R
Object_Name	CharacterString	SetPoint_status	R	R
Object_Type	BACnetObjectType	ANALOG_INPUT (0)	R	R
Present_Value	REAL	16 .. 30°C / 61 .. 86°F	R	R
Description	CharacterString	-	O	-
Device_Type	CharacterString	-	O	-
Status_Flags	BACnetStatusFlags	{FALSE, FALSE/TRUE, FALSE, FALSE}	R	R
Event_State	BACnetEventState	STATE_NORMAL (0)	R	R
Reliability	BACnetReliability	NO_FAULT_DETECTED (0), UNRELIABLE_OTHER (7)	O	R
Out_Of_Service	BOOLEAN	FALSE	R	R
Update_Interval	Unsigned	-	O	-
Units	BACnetEngineeringUnits	Celsius degrees (62) Fahrenheit degrees (64)	R	R
Min_Pres_Value	REAL	16°C / 61°F	O	R
Max_Pres_Value	REAL	30°C / 86°F	O	R
Resolution	REAL	-	O	-
COV_Increment	REAL	0	O	W
Time_Delay	Unsigned	-	O	-
Notification_Class	Unsigned	-	O	-
High_Limit	REAL	-	O	-
Low_Limit	REAL	-	O	-
Deadband	REAL	-	O	-
Limit_Enable	BACnetLimitEnable	-	O	-
Event_Enable	BACnetEventTransitionBits	-	O	-
Acked_Transitions	BACnetEventTransitionBits	-	O	-
Notify_Type	BACnetNotifyType	-	O	-
Event_Time_Stamps	BACnetArray[N] of BACnetTimeStamp	-	O	-
Profile_Name	CharacterString	-	O	-

NOTE
You can set the temperature scale in Celsius or Fahrenheit via the DIP switches. More information in DIP switches (page 11).

7.3.7. Setpoint_command (Analog Output Object Type)

It is used to request a temperature setpoint from the BACnet side.

NOTE
To know more, see Considerations on Temperature Signals (page 60).

Property Identifier	Property Datatype	Value	ASHRAE	Gateway
Object_Identifier	BACnetObjectIdentifier	(Analog Output, 0)	R	R
Object_Name	CharacterString	SetPoint_command	R	R
Object_Type	BACnetObjectType	ANALOG_OUTPUT (1)	R	R
Present_Value	REAL	16 .. 30°C / 61 .. 86°F	W	W
Status_Flags	BACnetStatusFlags	{FALSE, FALSE, FALSE, FALSE}	R	R
Event_State	BACnetEventState	STATE_NORMAL (0)	R	R
Reliability	BACnetReliability	NO_FAULT_DETECTED (0)	O	R
Out_Of_Service	BOOLEAN	FALSE	R	R
Update_Interval	Unsigned	-	O	-
Units	BACnetEngineeringUnits	Celsius degrees (62) Fahrenheit degrees (64)	R	R
Min_Pres_Value	REAL	16°C / 61°F	O	R
Max_Pres_Value	REAL	30°C / 86°F	O	R
Resolution	R	-	O	-
COV_Increment	REAL	0	O	W
Priority_Array	BACnetPriorityArray	BACnetPriorityArray	R	R
Relinquish_Default	Unsigned	22	R	R
Time_Delay	Unsigned	-	O	-
Notification_Class	Unsigned	-	O	-
High_Limit	REAL	-	O	-
Low_Limit	REAL	-	O	-
Deadband	REAL	-	O	-
Limit_Enable	BACnetLimitEnable	-	O	-
Event_Enable	BACnetEventTransitionBits	-	O	-
Acked_Transitions	BACnetEventTransitionBits	-	O	-
Notify_Type	BACnetNotifyType	-	O	-
Event_Time_Stamps	BACnetArray[N] of BACnetTimeStamp	-	O	-
Profile_Name	CharacterString	-	O	-

NOTE
You can set the temperature scale in Celsius or Fahrenheit via the DIP switches. More information in DIP switches (page 11).

7.3.8. VirtualTempActive (Binary Input Object Type)

It indicates if the Virtual Temperature function is active or inactive.

NOTE

The Virtual Temperature function allows the gateway to set the reference temperature using the value reported by a sensor connected to the BMS.

For more information, see Ambient Temperature and Virtual Temperature Function (page 56).

Property Identifier	Property Datatype	Value	ASHRAE	Gateway
Object_Identifier	BACnetObjectIdentifier	(Binary Input, 14)	R	R
Object_Name	CharacterString	VirtualTempActive	R	R
Object_Type	BACnetObjectType	BINARY_INPUT (3)	R	R
Present_Value	BACnetBinaryPV	INACTIVE (0) / ACTIVE (1)	R	R
Description	CharacterString	-	O	-
Device_Type	CharacterString	-	O	-
Status_Flags	BACnetStatusFlags	{FALSE, FALSE, FALSE, FALSE}	R	R
Event_State	BACnetEventState	STATE_NORMAL (0)	R	R
Reliability	BACnetReliability	NO_FAULT_DETECTED (0) UNRELIABLE_OTHER (7)	O	R
Out_Of_Service	BOOLEAN	FALSE	R	R
Polarity	BACnetPolarity	NORMAL (0)	R	R
Inactive_Text	CharacterString	No	O	R
Active_Text	CharacterString	Yes	O	R
Change_Of_State_Time	BACnetDatetime	-	O	-
Change_Of_State_Count	Unsigned	-	O	-
Time_Of_State_Count_Reset	BACnetDatetime	-	O	-
Elapsed_Active_Time	Unsigned	-	O	-
Time_Of_Active_Time_Reset	BACnetDatetime	-	O	-
Time_Delay	Unsigned	-	O	-
Notification_Class	Unsigned	-	O	-
Alarm_Value	BACnetBinaryPV	-	O	-
Event_Enable	BACnetEventTransitionBits	-	O	-
Acked_Transitions	BACnetEventTransitionBits	-	O	-
Notify_Type	BACnetNotifyType	-	O	-
Event_Time_Stamps	BACnetArray[N] of BACnetTimeStamp	-	O	-
Profile_Name	CharacterString	-	O	-

7.3.9. FanSpeed_status (Multistate Input Object Type)

It indicates the indoor unit's fan speed.

Property Identifier	Property Datatype	Value	ASHRAE	Gateway
Object_Identifier	BACnetObjectIdentifier	(Multistate Input, 1)	R	R
Object_Name	CharacterString	FanSpeed_status	R	R
Object_Type	BACnetObjectType	MULTISTATE_INPUT (13)	R	R
Present_Value	Unsigned	1 .. 5	R	R
Description	CharacterString	-	O	-
Device_Type	CharacterString	-	O	-
Status_Flags	BACnetStatusFlags	{FALSE, FALSE/TRUE, FALSE, FALSE}	R	R
Event_State	BACnetEventState	STATE_NORMAL (0)	R	R
Reliability	BACnetReliability	NO_FAULT_DETECTED (0), UNRELIABLE_OTHER (7)	O	R
Out_Of_Service	BOOLEAN	FALSE/TRUE	R	R
Number_Of_States	Unsigned	5	R	R
State_Text	BACnetArray[N] of CharacterString	Check the **Fan speed status table** below.	O	R
Time_Delay	Unsigned	-	O	-
Notification_Class	Unsigned	-	O	-
Alarm_Values	List of Unsigned	-	O	-
Fault_Values	List of Unsigned	-	O	-
Event_Enable	BACnetEventTransitionBits	-	O	-
Acked_Transitions	BACnetEventTransitionBits	-	O	-
Notify_Type	BACnetNotifyType	-	O	-
Event_Time_Stamps	BACnetArray[N] of BACnetTimeStamp	-	O	-
Profile_Name	CharacterString	-	O	-

Table 7. Fan speed status

Present_Value	State_Text
1	Auto[1]
2	Fan Speed 1
3	Fan Speed 2
4	Fan Speed 3
5	Fan Speed 4

[1]Older indoor units may lack this position.

7.3.10. FanSpeed_command (Multistate Output Object Type)

It sets the indoor unit's fan speed.

Property Identifier	Property Datatype	Value	ASHRAE	Gateway
Object_Identifier	BACnetObjectIdentifier	(Multistate Output, 1)	R	R
Object_Name	CharacterString	FanSpeed_command	R	R
Object_Type	BACnetObjectType	MULTISTATE_OUTPUT (14)	R	R
Present_Value	Unsigned	1 .. 5	R	W
Description	CharacterString	-	O	-
Device_Type	CharacterString	-	O	-
Status_Flags	BACnetStatusFlags	{FALSE, FALSE, FALSE, FALSE}	R	R
Event_State	BACnetEventState	STATE_NORMAL (0)	R	R
Reliability	BACnetReliability	NO_FAULT_DETECTED (0)	O	R
Out_Of_Service	BOOLEAN	FALSE	R	R
Number_Of_States	Unsigned	5	R	R
State_Text	BACnetArray[N] of CharacterString	Check the **Fan speed command table** below	O	R
Priority_Array	BACnetPriorityArray	BACnetPriorityArray	R	R
Relinquish_Default	Unsigned	1	R	R
Time_Delay	Unsigned	-	O	-
Notification_Class	Unsigned	-	O	-
Feedback_Value	Unsigned	-	O	-
Event_Enable	BACnetEventTransitionBits	-	O	-
Acked_Transitions	BACnetEventTransitionBits	-	O	-
Notify_Type	BACnetNotifyType	-	O	-
Event_Time_Stamps	BACnetArray[N] of BACnetTimeStamp	-	O	-
Profile_Name	CharacterString	-	O	-

Table 8. Fan speed command

Present_Value	State_Text
1	Auto[1]
2	Fan Speed 1
3	Fan Speed 2
4	Fan Speed 3
5	Fan Speed 4

[1]Older indoor units may lack this position.

7.3.11. AirDirectionUD_status (Multistate Input Object Type)

It indicates the indoor unit's vertical air direction (up-down) status.

Property Identifier	Property Datatype	Value	ASHRAE	Gateway
Object_Identifier	BACnetObjectIdentifier	(Multistate Input, 2)	R	R
Object_Name	CharacterString	AirDirectionUD_status	R	R
Object_Type	BACnetObjectType	MULTISTATE_INPUT(13)	R	R
Present_Value	Unsigned	1 .. 5	R	R
Description	CharacterString	-	O	-
Device_Type	CharacterString	-	O	-
Status_Flags	BACnetStatusFlags	{FALSE, FALSE/TRUE, FALSE, FALSE}	R	R
Event_State	BACnetEventState	STATE_NORMAL (0)	R	R
Reliability	BACnetReliability	NO_FAULT_DETECTED (0), UNRELIABLE_OTHER (7)	O	R
Out_Of_Service	BOOLEAN	FALSE/TRUE	R	R
Number_Of_States	Unsigned	5	R	R
State_Text	BACnetArray[N] of CharacterString	Check the **Air direction status table** below.	O	R
Time_Delay	Unsigned	-	O	-
Notification_Class	Unsigned	-	O	-
Alarm_Values	List of Unsigned	-	O	-
Fault_Values	List of Unsigned	-	O	-
Event_Enable	BACnetEventTransitionBits	-	O	-
Acked_Transitions	BACnetEventTransitionBits	-	O	-
Notify_Type	BACnetNotifyType	-	O	-
Event_Time_Stamps	BACnetArray[N] of BACnetTimeStamp	-	O	-
Profile_Name	CharacterString	-	O	-

Table 9. Air direction up-down status

Present_Value	State_Text
1	Pos1
2	Pos2
3	Pos3
4	Pos4
5	Swing

7.3.12. AirDirectionUD_command (Multistate Output Object Type)

It sets the indoor unit's vertical air direction (up-down).

Property Identifier	Property Datatype	Value	ASHRAE	Gateway
Object_Identifier	BACnetObjectIdentifier	(Multistate Output, 2)	R	R
Object_Name	CharacterString	AirDirectionUD_command	R	R
Object_Type	BACnetObjectType	MULTISTATE_OUTPUT (14)	R	R
Present_Value	Unsigned	1 .. 5	R	W
Description	CharacterString	-	O	-
Device_Type	CharacterString	-	O	-
Status_Flags	BACnetStatusFlags	{FALSE, FALSE, FALSE, FALSE}	R	R
Event_State	BACnetEventState	STATE_NORMAL (0)	R	R
Reliability	BACnetReliability	NO_FAULT_DETECTED (0)	O	R
Out_Of_Service	BOOLEAN	FALSE	R	R
Number_Of_States	Unsigned	5	R	R
State_Text	BACnetArray[N] of CharacterString	Check the **Air direction command table** below	O	R
Priority_Array	BACnetPriorityArray	-	R	R
Relinquish_Default	Unsigned	-	R	R
Time_Delay	Unsigned	-	O	-
Notification_Class	Unsigned	-	O	-
Feedback_Value	Unsigned	-	O	-
Event_Enable	BACnetEventTransitionBits	-	O	-
Acked_Transitions	BACnetEventTransitionBits	-	O	-
Notify_Type	BACnetNotifyType	-	O	-
Event_Time_Stamps	BACnetArray[N] of BACnetTimeStamp	-	O	-
Profile_Name	CharacterString	-	O	-

Table 10. Air direction up-down command

Present_Value	State_Text
1	Pos1
2	Pos2
3	Pos3
4	Pos4
5	Swing

7.3.13. RoomTemperature_status (Analog Input Object Type)

It reports the ambient temperature measured by the sensor from the AC system side. It can be reported by the indoor unit or the wired remote controller's sensor.

NOTE
To know more, see Ambient Temperature and Virtual Temperature Function (page 56).

Property Identifier	Property Datatype	Value	ASHRAE	Gateway
Object_Identifier	BACnetObjectIdentifier	(Analog Input, 1)	R	R
Object_Name	CharacterString	RoomTemperature_status	R	R
Object_Type	BACnetObjectType	ANALOG_INPUT (0)	R	R
Present_Value	REAL	-10 .. 50°C / 14 .. 122°F	R	R
Description	CharacterString	-	O	-
Device_Type	CharacterString	-	O	-
Status_Flags	BACnetStatusFlags	{FALSE, FALSE/TRUE, FALSE, FALSE}	R	R
Event_State	BACnetEventState	STATE_NORMAL (0)	R	R
Reliability	BACnetReliability	NO_FAULT_DETECTED (0), UNRELIABLE_OTHER (7)	O	R
Out_Of_Service	BOOLEAN	FALSE	R	R
Update_Interval	Unsigned	-	O	-
Units	BACnetEngineeringUnits	Celsius degrees (62) Fahrenheit degrees (64)	R	R
Min_Pres_Value	REAL	-10°C / 14°F	O	-
Max_Pres_Value	REAL	50°C / 122°F	O	-
Resolution	REAL	-	O	-
COV_Increment	REAL	0	O	W
Time_Delay	Unsigned	-	O	-
Notification_Class	Unsigned	-	O	-
High_Limit	REAL	-	O	-
Low_Limit	REAL	-	O	-
Deadband	REAL	-	O	-
Limit_Enable	BACnetLimitEnable	-	O	-
Event_Enable	BACnetEventTransitionBits	-	O	-
Acked_Transitions	BACnetEventTransitionBits	-	O	-
Notify_Type	BACnetNotifyType	-	O	-
Event_Time_Stamps	BACnetArray[N] of BACnetTimeStamp	-	O	-
Profile_Name	CharacterString	-	O	-

NOTE
You can set the temperature scale in Celsius or Fahrenheit scale via DIP switches. More information in DIP switches (page 11).

7.3.14. RoomTemperature_command (Analog Output Object Type)

It is used to write the ambient temperature measured by a sensor from the BACnet side.

NOTE
To know more, see Considerations on Temperature Signals (page 60).

Property Identifier	Property Datatype	Value	ASHRAE	Gateway
Object_Identifier	BACnetObjectIdentifier	(Analog Output, 1)	R	R
Object_Name	CharacterString	RoomTemperature_command	R	R
Object_Type	BACnetObjectType	ANALOG_OUTPUT (1)	R	R
Present_Value	REAL	-10 .. 50°C / 14 .. 122°F	R	W
Description	CharacterString	-	O	-
Device_Type	CharacterString	-	O	-
Status_Flags	BACnetStatusFlags	{FALSE, FALSE, FALSE, FALSE}	R	R
Event_State	BACnetEventState	STATE_NORMAL (0)	R	R
Reliability	BACnetReliability	NO_FAULT_DETECTED (0)	O	R
Out_Of_Service	BOOLEAN	FALSE	R	R
Update_Interval	Unsigned	-	O	-
Units	BACnetEngineeringUnits	Celsius degrees (62) Fahrenheit degrees (64)	R	R
Min_Pres_Value	REAL	-10°C / 14°F	O	-
Max_Pres_Value	REAL	50°C / 122°F	O	-
Resolution	REAL	-	O	-
COV_Increment	REAL	0	O	W
Priority_Array	BACnetPriorityArray	BACnetPriorityArray	R	R
Relinquish_Default	Unsigned	-32768	R	W
Time_Delay	Unsigned	-	O	-
Notification_Class	Unsigned	-	O	-
High_Limit	REAL	-	O	-
Low_Limit	REAL	-	O	-
Deadband	REAL	-	O	-
Limit_Enable	BACnetLimitEnable	-	O	-
Event_Enable	BACnetEventTransitionBits	-	O	-
Acked_Transitions	BACnetEventTransitionBits	-	O	-
Notify_Type	BACnetNotifyType	-	O	-
Event_Time_Stamps	BACnetArray[N] of BACnetTimeStamp	-	O	-
Profile_Name	CharacterString	-	O	-

NOTE
You can set the temperature scale in Celsius or Fahrenheit scale via DIP switches. More information in DIP switches (page 11).

7.3.15. ErrorCode (Analog Input Object Type)

It indicates the AC system's current error.

Property Identifier	Property Datatype	Value	ASHRAE	Gateway
Object_Identifier	BACnetObjectIdentifier	(Analog Input, 2)	R	R
Object_Name	CharacterString	ErrorCode	R	R
Object_Type	BACnetObjectType	ANALOG_INPUT (0)	R	R
Present_Value	REAL	0 .. 90, 65535	R	R
Description	CharacterString	-	O	-
Device_Type	CharacterString	-	O	-
Status_Flags	BACnetStatusFlags	{FALSE, FALSE, FALSE, FALSE}	R	R
Event_State	BACnetEventState	STATE_NORMAL (0)	R	R
Reliability	BACnetReliability	NO_FAULT_DETECTED (0)	O	R
Out_Of_Service	BOOLEAN	FALSE	R	R
Update_Interval	Unsigned	300	O	-
Units	BACnetEngineeringUnits	NO_UNITS (95)	R	R
Min_Pres_Value	REAL	0	O	-
Max_Pres_Value	REAL	65535	O	-
Resolution	REAL	-	O	-
COV_Increment	REAL	0	O	W
Time_Delay	Unsigned	-	O	-
Notification_Class	Unsigned	-	O	-
High_Limit	REAL	-	O	-
Low_Limit	REAL	-	O	-
Deadband	REAL	-	O	-
Limit_Enable	BACnetLimitEnable	-	O	-
Event_Enable	BACnetEventTransitionBits	-	O	-
Acked_Transitions	BACnetEventTransitionBits	-	O	-
Notify_Type	BACnetNotifyType	-	O	-
Event_Time_Stamps	BACnetArray[N] of BACnetTimeStamp	-	O	-
Profile_Name	CharacterString	-	O	-

NOTICE

For more information on each error code, see Error Codes (page 62).

7.3.16. ErrorCodeM (Multistate Input Object Type)

It indicates the AC system's current error.

Property Identifier	Property Datatype	Value	ASHRAE	Gateway
Object_Identifier	BACnetObjectIdentifier	(Multistate Input, 4)	R	R
Object_Name	CharacterString	ErrorCodeM	R	R
Object_Type	BACnetObjectType	MULTISTATE_INPUT(13)	R	R
Present_Value	Unsigned	0 .. 90, 65535	R	R
Description	CharacterString	-	O	-
Device_Type	CharacterString	-	O	-
Status_Flags	BACnetStatusFlags	{FALSE, FALSE, FALSE, FALSE}	R	R
Event_State	BACnetEventState	STATE_NORMAL (0)	R	R
Reliability	BACnetReliability	NO_FAULT_DETECTED (0)	O	R
Out_Of_Service	BOOLEAN	FALSE	R	R
Number_Of_States	Unsigned	92	R	R
State_Text	BACnetArray[N] of CharacterString	Check Error Codes (page 62)	O	R
Time_Delay	Unsigned	-	O	-
Notification_Class	Unsigned	-	O	-
Alarm_Values	List of Unsigned	-	O	-
Fault_Values	List of Unsigned	-	O	-
Event_Enable	BACnetEventTransitionBits	-	O	-
Acked_Transitions	BACnetEventTransitionBits	-	O	-
Notify_Type	BACnetNotifyType	-	O	-
Event_Time_Stamps	BACnetArray[N] of BACnetTimeStamp	-	O	-
Profile_Name	CharacterString	-	O	-

7.3.17. ErrorActive (Binary Input Object Type)

It indicates if there is an active error in the AC system.

Property Identifier	Property Datatype	Value	ASHRAE	Gateway
Object_Identifier	BACnetObjectIdentifier	(Binary Input, 1)	R	R
Object_Name	CharacterString	ErrorActive	R	R
Object_Type	BACnetObjectType	BINARY_INPUT (3)	R	R
Present_Value	BACnetBinaryPV	INACTIVE (0) / ACTIVE (1)	R	R
Description	CharacterString	-	O	-
Device_Type	CharacterString	-	O	-
Status_Flags	BACnetStatusFlags	{FALSE, FALSE, FALSE, FALSE}	R	R
Event_State	BACnetEventState	STATE_NORMAL (0)	R	R
Reliability	BACnetReliability	NO_FAULT_DETECTED (0)	O	R
Out_Of_Service	BOOLEAN	FALSE	R	R
Polarity	BACnetPolarity	NORMAL (0)	R	R
Inactive_Text	CharacterString	No	O	R
Active_Text	CharacterString	Error	O	R
Change_Of_State_Time	BACnetDatetime	-	O	-
Change_Of_State_Count	Unsigned	-	O	-
Time_Of_State_Count_Reset	BACnetDatetime	-	O	-
Elapsed_Active_Time	Unsigned	-	O	-
Time_Of_Active_Time_Reset	BACnetDatetime	-	O	-
Time_Delay	Unsigned	-	O	-
Notification_Class	Unsigned	-	O	-
Alarm_Value	BACnetBinaryPV	-	O	-
Event_Enable	BACnetEventTransitionBits	-	O	-
Acked_Transitions	BACnetEventTransitionBits	-	O	-
Notify_Type	BACnetNotifyType	-	O	-
Event_Time_Stamps	BACnetArray[N] of BACnetTimeStamp	-	O	-
Profile_Name	CharacterString	-	O	-

7.3.18. ErrorAddress (Analog Input Object Type)

It indicates the address of the indoor unit which is reporting the error.

Property Identifier	Property Datatype	Value	ASHRAE	Intesis
Object_Identifier	BACnetObjectIdentifier	(Analog Input, 4)	R	R
Object_Name	CharacterString	ErrorAddress	R	R
Object_Type	BACnetObjectType	ANALOG_INPUT (0)	R	R
Present_Value	REAL	-	R	R
Description	CharacterString	-	O	-
Device_Type	CharacterString	-	O	-
Status_Flags	BACnetStatusFlags	{FALSE, FALSE/TRUE, FALSE, FALSE}	R	R
Event_State	BACnetEventState	STATE_NORMAL (0)	R	R
Reliability	BACnetReliability	NO_FAULT_DETECTED (0) UNRELIABLE_OTHER (7)	O	R
Out_Of_Service	BOOLEAN	FALSE/TRUE	R	R
Update_Interval	Unsigned	-	O	-
Units	BACnetEngineeringUnits	NO_UNITS (95)	R	R
Min_Pres_Value	REAL	-	O	-
Max_Pres_Value	REAL	-	O	-
Resolution	REAL	-	O	-
COV_Increment	REAL	0	O	W
Time_Delay	Unsigned	-	O	-
Notification_Class	Unsigned	-	O	-
High_Limit	REAL	-	O	-
Low_Limit	REAL	-	O	-
Deadband	REAL	-	O	-
Limit_Enable	BACnetLimitEnable	-	O	-
Event_Enable	BACnetEventTransitionBits	-	O	-
Acked_Transitions	BACnetEventTransitionBits	-	O	-
Notify_Type	BACnetNotifyType	-	O	-
Event_Time_Stamps	BACnetArray[N] of BACnetTimeStamp	-	O	-
Profile_Name	CharacterString	-	O	-

7.3.19. ErrorReset (Binary Output Object Type)

It resets the error signal.

Property Identifier	Property Datatype	Value	ASHRAE	Intesis
Object_Identifier	BACnetObjectIdentifier	(Binary Output, 5)	R	R
Object_Name	CharacterString	ErrorReset	R	R
Object_Type	BACnetObjectType	BINARY_OUTPUT (4)	R	R
Present_Value	BACnetBinaryPV	INACTIVE (0) / ACTIVE (1)	R	W
Description	CharacterString	-	O	-
Device_Type	CharacterString	-	O	-
Status_Flags	BACnetStatusFlags	{FALSE, FALSE, FALSE, FALSE}	R	R
Event_State	BACnetEventState	STATE_NORMAL (0)	R	R
Reliability	BACnetReliability	NO_FAULT_DETECTED (0)	O	R
Out_Of_Service	BOOLEAN	FALSE	R	R
Polarity	BACnetPolarity	NORMAL (0)	R	R
Inactive_Text	CharacterString	Normal	O	R
Active_Text	CharacterString	Reset	O	R
Change_Of_State_Time	BACnetDatetime	-	O	-
Change_Of_State_Count	Unsigned	-	O	-
Time_Of_State_Count_Reset	BACnetDatetime	-	O	-
Elapsed_Active_Time	Unsigned	-	O	-
Time_Of_Active_Time_Reset	BACnetDatetime	-	O	-
Minimum_Off_Time	Unsigned32	-	O	-
Minimum_On_Time	Unsigned32	-	O	-
Priority_Array	BACnetPriorityArray	BACnetPriorityArray	R	R
Relinquish_Default	BACnetBinaryPV	INACTIVE (0)	R	R
Time Delay	Unsigned	-	O	-
Notification_Class	Unsigned	-	O	-
Feedback_Value	BACnetBinaryPV	-	O	-
Event_Enable	BACnetEventTransitionBits	-	O	-
Acked_Transitions	BACnetEventTransitionBits	-	O	-
Notify_Type	BACnetNotifyType	-	O	-
Event_Time_Stamps	BACnetArray[N] of BACnetTimeStamp	-	O	-
Profile_Name	CharacterString	-	O	-

7.3.20. OnTimeCounter (Analog Value Object Type)

It indicates the AC unit running time.

Property Identifier	Property Datatype	Value	ASHRAE	Gateway
Object_Identifier	BACnetObjectIdentifier	(Analog Value, 0)	R	R
Object_Name	CharacterString	OnTimeCounter	R	R
Object_Type	BACnetObjectType	ANALOG_VALUE (2)	R	R
Present_Value	REAL	0 .. 65535	R	R/W
Description	CharacterString	-	O	-
Status_Flags	BACnetStatusFlags	{FALSE, FALSE, FALSE, FALSE}	R	R
Event_State	BACnetEventState	STATE_NORMAL (0)	R	R
Reliability	BACnetReliability	NO_FAULT_DETECTED (0)	O	R
Out_Of_Service	BOOLEAN	FALSE	R	R
Update_Interval	Unsigned	-	O	-
Units	BACnetEngineeringUnits	Hours (71)	R	R
Min_Pres_Value	REAL	0	O	-
Max_Pres_Value	REAL	65535	O	-
Resolution	REAL	-	O	-
COV_Increment	REAL	0	O	W
Time_Delay	Unsigned	-	O	-
Notification_Class	Unsigned	-	O	-
High_Limit	REAL	-	O	-
Low_Limit	REAL	-	O	-
Deadband	REAL	-	O	-
Limit_Enable	BACnetLimitEnable	-	O	-
Event_Enable	BACnetEventTransitionBits	-	O	-
Acked_Transitions	BACnetEventTransitionBits	-	O	-
Notify_Type	BACnetNotifyType	-	O	-
Event_Time_Stamps	BACnetArray[N] of BACnetTimeStamp	-	O	-
Profile_Name	CharacterString	-	O	-

7.3.21. FilterSign (Binary Input Object Type)

It indicates the status of the filter.

Property Identifier	Property Datatype	Value	ASHRAE	Intesis
Object_Identifier	BACnetObjectIdentifier	(Binary Input, 1)	R	R
Object_Name	CharacterString	FilterSign	R	R
Object_Type	BACnetObjectType	BINARY_OUTPUT (4)	R	R
Present_Value	BACnetBinaryPV	INACTIVE (0) / ACTIVE (1)	R	R
Description	CharacterString	-	O	-
Device_Type	CharacterString	-	O	-
Status_Flags	BACnetStatusFlags	{FALSE, FALSE/TRUE, FALSE, FALSE}	R	R
Event_State	BACnetEventState	STATE_NORMAL (0)	R	R
Reliability	BACnetReliability	NO_FAULT_DETECTED (0) UNRELIABLE_OTHER (7)	O	R
Out_Of_Service	BOOLEAN	FALSE	R	R
Polarity	BACnetPolarity	NORMAL (0)	R	R
Inactive_Text	CharacterString	OK	O	R
Active_Text	CharacterString	Dirty	O	R
Change_Of_State_Time	BACnetDatetime	-	O	-
Change_Of_State_Count	Unsigned	-	O	-
Time_Of_State_Count_Reset	BACnetDatetime	-	O	-
Elapsed_Active_Time	Unsigned	-	O	-
Time_Of_Active_Time_Reset	BACnetDatetime	-	O	-
Time_Delay	Unsigned	-	O	-
Notification_Class	Unsigned	-	O	-
Feedback_Value	BACnetBinaryPV	-	O	-
Event_Enable	BACnetEventTransitionBits	-	O	-
Acked_Transitions	BACnetEventTransitionBits	-	O	-
Notify_Type	BACnetNotifyType	-	O	-
Event_Time_Stamps	BACnetArray[N] of BACnetTimeStamp	-	O	-
Profile_Name	CharacterString	-	O	-

7.3.22. FilterReset (Binary Output Object Type)

It resets the filter signal.

Property Identifier	Property Datatype	Value	ASHRAE	Intesis
Object_Identifier	BACnetObjectIdentifier	(Binary Output, 4)	R	R
Object_Name	CharacterString	FilterReset	R	R
Object_Type	BACnetObjectType	BINARY_OUTPUT (4)	R	R
Present_Value	BACnetBinaryPV	INACTIVE (0) / ACTIVE (1)	W	W
Description	CharacterString	-	O	-
Device_Type	CharacterString	-	O	-
Status_Flags	BACnetStatusFlags	{FALSE, FALSE, FALSE, FALSE}	R	R
Event_State	BACnetEventState	STATE_NORMAL (0)	R	R
Reliability	BACnetReliability	NO_FAULT_DETECTED (0)	O	R
Out_Of_Service	BOOLEAN	FALSE	R	R
Polarity	BACnetPolarity	NORMAL (0)	R	R
Inactive_Text	CharacterString	Normal	O	R
Active_Text	CharacterString	Reset	O	R
Change_Of_State_Time	BACnetDatetime	-	O	-
Change_Of_State_Count	Unsigned	-	O	-
Time_Of_State_Count_Reset	BACnetDatetime	-	O	-
Elapsed_Active_Time	Unsigned	-	O	-
Time_Of_Active_Time_Reset	BACnetDatetime	-	O	-
Minimum_Off_Time	Unsigned32	-	O	-
Minimum_On_Time	Unsigned32	-	O	-
Priority_Array	BACnetPriorityArray	BACnetPriorityArray	R	R
Relinquish_Default	BACnetBinaryPV	INACTIVE (0)	R	R
Time Delay	Unsigned	-	O	-
Notification_Class	Unsigned	-	O	-
Feedback_Value	BACnetBinaryPV	-	O	-
Event_Enable	BACnetEventTransitionBits	-	O	-
Acked_Transitions	BACnetEventTransitionBits	-	O	-
Notify_Type	BACnetNotifyType	-	O	-
Event_Time_Stamps	BACnetArray[N] of BACnetTimeStamp	-	O	-
Profile_Name	CharacterString	-	O	-

7.3.23. Occupancy (Multistate Value Object Type)

It indicates the current occupancy status.

NOTE
To know more, see Occupancy Function (page 54).

Property Identifier	Property Datatype	Value	ASHRAE	Gateway
Object_Identifier	BACnetObjectIdentifier	(Multistate Value, 0)	R	R
Object_Name	CharacterString	Occupancy	R	R
Object_Type	BACnetObjectType	MULTISTATE_VALUE (19)	R	R
Present_Value	BACnetBinaryPV	1 .. 3	R	R/W
Description	CharacterString	-	O	-
Status_Flags	BACnetStatusFlags	{FALSE, FALSE, FALSE, FALSE}	R	R
Event_State	BACnetEventState	STATE_NORMAL (0)	R	R
Reliability	BACnetReliability	NO_FAULT_DETECTED (0)	O	R
Out_Of_Service	BOOLEAN	FALSE	R	R
Number_Of_States	Unsigned	3	R	R
State_Text	BACnetArray[N] of CharacterString	Check the **Occupancy values table** below	O	R
Priority_Array	BACnetPriorityArray	-	R	-
Relinquish_Default	Unsigned	-	R	-
Time_Delay	Unsigned	-	O	-
Notification_Class	Unsigned	-	O	-
Alarm_Value	Unsigned	-	O	-
Event_Enable	BACnetEventTransitionBits	-	O	-
Acked_Transitions	BACnetEventTransitionBits	-	O	-
Notify_Type	BACnetNotifyType	-	O	-
Event_Time_Stamps	BACnetArray[N] of BACnetTimeStamp	-	O	-
Profile_Name	CharacterString	-	O	-

Table 11. Occupancy values

Present_Value	State_Text
1	Occupied
2	Unoccupied
3	Disabled

7.3.24. OccupiedCoolSetPoint (Analog Value Object Type)

It indicates the temperature setpoint when the room is occupied, the cool mode is selected, and the occupancy object is enabled.

NOTE
To know more, see Occupancy Function (page 54).

Property Identifier	Property Datatype	Value	ASHRAE	Gateway
Object_Identifier	BACnetObjectIdentifier	(Analog Value, 1)	R	R
Object_Name	CharacterString	OccupiedCoolSetPoint	R	R
Object_Type	BACnetObjectType	ANALOG_VALUE (2)	R	R
Present_Value	REAL	0 .. 65535	R	R/W
Description	CharacterString	-	O	-
Status_Flags	BACnetStatusFlags	{FALSE, FALSE, FALSE, FALSE}	R	R
Event_State	BACnetEventState	STATE_NORMAL (0)	R	R
Reliability	BACnetReliability	NO_FAULT_DETECTED (0)	O	R
Out_Of_Service	BOOLEAN	FALSE	R	R
Update_Interval	Unsigned	-	O	-
Units	BACnetEngineeringUnits	Degrees Celsius (62) Degrees Fahrenheit (64)	R	R
Min_Pres_Value	REAL	0	O	-
Max_Pres_Value	REAL	65535	O	-
Resolution	REAL	-	O	-
COV_Increment	REAL	0	O	W
Time_Delay	Unsigned	-	O	-
Notification_Class	Unsigned	-	O	-
High_Limit	REAL	-	O	-
Low_Limit	REAL	-	O	-
Deadband	REAL	-	O	-
Limit_Enable	BACnetLimitEnable	-	O	-
Event_Enable	BACnetEventTransitionBits	-	O	-
Acked_Transitions	BACnetEventTransitionBits	-	O	-
Notify_Type	BACnetNotifyType	-	O	-
Event_Time_Stamps	BACnetArray[N] of BACnetTimeStamp	-	O	-
Profile_Name	CharacterString	-	O	-

NOTE
You can set the temperature scale in Celsius or Fahrenheit scale via DIP switches. More information in DIP switches (page 11).

7.3.25. OccupiedHeatSetPoint (Analog Value Object Type)

It indicates the temperature setpoint when the room is occupied, the heat mode is selected, and the occupancy object is enabled.

NOTE
To know more, see Occupancy Function (page 54).

Property Identifier	Property Datatype	Value	ASHRAE	Gateway
Object_Identifier	BACnetObjectIdentifier	(Analog Value, 2)	R	R
Object_Name	CharacterString	OccupiedHeatSetPoint	R	R
Object_Type	BACnetObjectType	ANALOG_VALUE (2)	R	R
Present_Value	REAL		R	R/W
Description	CharacterString	-	O	-
Status_Flags	BACnetStatusFlags	{FALSE, FALSE, FALSE, FALSE}	R	R
Event_State	BACnetEventState	STATE_NORMAL (0)	R	R
Reliability	BACnetReliability	NO_FAULT_DETECTED (0)	O	R
Out_Of_Service	BOOLEAN	FALSE	R	R
Update_Interval	Unsigned	-	O	-
Units	BACnetEngineeringUnits	Degrees Celsius (62) Degrees Fahrenheit (64)	R	R
Min_Pres_Value	REAL		O	-
Max_Pres_Value	REAL		O	-
Resolution	REAL	-	O	-
COV_Increment	REAL	0	O	W
Time_Delay	Unsigned	-	O	-
Notification_Class	Unsigned	-	O	-
High_Limit	REAL	-	O	-
Low_Limit	REAL	-	O	-
Deadband	REAL	-	O	-
Limit_Enable	BACnetLimitEnable	-	O	-
Event_Enable	BACnetEventTransitionBits	-	O	-
Acked_Transitions	BACnetEventTransitionBits	-	O	-
Notify_Type	BACnetNotifyType	-	O	-
Event_Time_Stamps	BACnetArray[N] of BACnetTimeStamp	-	O	-
Profile_Name	CharacterString	-	O	-

NOTE
You can set the temperature scale in Celsius or Fahrenheit scale via DIP switches. More information in DIP switches (page 11).

7.3.26. UnoccupiedCoolSetPoint (Analog Value Object Type)

It indicates the setpoint when the room is unoccupied, the cool mode is selected, and the occupancy object is enabled.

NOTE
To know more, see Occupancy Function (page 54).

Property Identifier	Property Datatype	Value	ASHRAE	Gateway
Object_Identifier	BACnetObjectIdentifier	(Analog Value, 3)	R	R
Object_Name	CharacterString	UnoccupiedCoolSetPoint	R	R
Object_Type	BACnetObjectType	ANALOG_VALUE (2)	R	R
Present_Value	REAL		R	R/W
Description	CharacterString	-	O	-
Status_Flags	BACnetStatusFlags	{FALSE, FALSE, FALSE, FALSE}	R	R
Event_State	BACnetEventState	STATE_NORMAL (0)	R	R
Reliability	BACnetReliability	NO_FAULT_DETECTED (0)	O	R
Out_Of_Service	BOOLEAN	FALSE	R	R
Update_Interval	Unsigned	-	O	-
Units	BACnetEngineeringUnits	Degrees Celsius (62) Degrees Fahrenheit (64)	R	R
Min_Pres_Value	REAL		O	-
Max_Pres_Value	REAL		O	-
Resolution	REAL	-	O	-
COV_Increment	REAL	0	O	W
Time_Delay	Unsigned	-	O	-
Notification_Class	Unsigned	-	O	-
High_Limit	REAL	-	O	-
Low_Limit	REAL	-	O	-
Deadband	REAL	-	O	-
Limit_Enable	BACnetLimitEnable	-	O	-
Event_Enable	BACnetEventTransitionBits	-	O	-
Acked_Transitions	BACnetEventTransitionBits	-	O	-
Notify_Type	BACnetNotifyType	-	O	-
Event_Time_Stamps	BACnetArray[N] of BACnetTimeStamp	-	O	-
Profile_Name	CharacterString	-	O	-

NOTE
You can set the temperature scale in Celsius or Fahrenheit scale via DIP switches. More information in DIP switches (page 11).

7.3.27. UnoccupiedHeatSetPoint (Analog Value Object Type)

It indicates the setpoint temperature when the room is unoccupied, the heat mode is selected, and the occupancy object is enabled.

NOTE
To know more, see Occupancy Function (page 54).

Property Identifier	Property Datatype	Value	ASHRAE	Gateway
Object_Identifier	BACnetObjectIdentifier	(Analog Value, 4)	R	R
Object_Name	CharacterString	UnoccupiedHeatSetPoint	R	R
Object_Type	BACnetObjectType	ANALOG_VALUE (2)	R	R
Present_Value	REAL	0 .. 65535	R	R/W
Description	CharacterString	-	O	-
Status_Flags	BACnetStatusFlags	{FALSE, FALSE, FALSE, FALSE}	R	R
Event_State	BACnetEventState	STATE_NORMAL (0)	R	R
Reliability	BACnetReliability	NO_FAULT_DETECTED (0)	O	R
Out_Of_Service	BOOLEAN	FALSE	R	R
Update_Interval	Unsigned	-	O	-
Units	BACnetEngineeringUnits	Degrees Celsius (62) Degrees Fahrenheit (64)	R	R
Min_Pres_Value	REAL		O	-
Max_Pres_Value	REAL		O	-
Resolution	REAL	-	O	-
COV_Increment	REAL	0	O	W
Time_Delay	Unsigned	-	O	-
Notification_Class	Unsigned	-	O	-
High_Limit	REAL	-	O	-
Low_Limit	REAL	-	O	-
Deadband	REAL	-	O	-
Limit_Enable	BACnetLimitEnable	-	O	-
Event_Enable	BACnetEventTransitionBits	-	O	-
Acked_Transitions	BACnetEventTransitionBits	-	O	-
Notify_Type	BACnetNotifyType	-	O	-
Event_Time_Stamps	BACnetArray[N] of BACnetTimeStamp	-	O	-
Profile_Name	CharacterString	-	O	-

NOTE
You can set the temperature scale in Celsius or Fahrenheit scale via DIP switches. More information in DIP switches (page 11).

7.3.28. OccupancyContinuousCheck (Binary Value Object Type)

It indicates if the system is continuously checking the setpoint and occupancy conditions.

NOTE
To know more, see Occupancy Function (page 54).

Property Identifier	Property Datatype	Value	ASHRAE	Gateway
Object_Identifier	BACnetObjectIdentifier	(Binary Value, 0)	R	R
Object_Name	CharacterString	OccupancyContinuousCheck	R	R
Object_Type	BACnetObjectType	BINARY_VALUE (5)	R	R
Present_Value	BACnetBinaryPV	INACTIVE (0) / ACTIVE (1)	R	R/W
Description	CharacterString	-	O	-
Status_Flags	BACnetStatusFlags	{FALSE, FALSE, FALSE, FALSE}	R	R
Event_State	BACnetEventState	STATE_NORMAL (0)	R	R
Reliability	BACnetReliability	NO_FAULT_DETECTED (0)	O	R
Out_Of_Service	BOOLEAN	FALSE	R	R
Inactive_Text	CharacterString	Disabled	O	R
Active_Text	CharacterString	Enabled	O	R
Change_Of_State_Time	BACnetDatetime	-	O	-
Change_Of_State_Count	Unsigned	-	O	-
Time_Of_State_Count_Reset	BACnetDatetime	-	O	-
Elapsed_Active_Time	Unsigned	-	O	-
Time_Of_Active_Time_Reset	BACnetDatetime	-	O	-
Minimum_Off_Time	Unsigned32	-	O	-
Minimum_On_Time	Unsigned32	-	O	-
Priority_Array	BACnetPriorityArray	BACnetPriorityArray	R	-
Relinquish_Default	BACnetBinaryPV	INACTIVE (0)	R	-
Time_Delay	Unsigned	-	O	-
Notification_Class	Unsigned	-	O	-
Alarm_Value	BACnetBinaryPV	-	O	-
Event_Enable	BACnetEventTransitionBits	-	O	-
Acked_Transitions	BACnetEventTransitionBits	-	O	-
Notify_Type	BACnetNotifyType	-	O	-
Event_Time_Stamps	BACnetArray[N] of BACnetTimeStamp	-	O	-
Profile_Name	CharacterString	-	O	-

7.3.29. UnoccupiedDeadbandAction (Binary Value Object Type)

It indicates the action to be performed when Unoccupancy is enabled, and Room Temperature is within the deadband.

NOTE
To know more, see Occupancy Function (page 54).

Property Identifier	Property Datatype	Value	ASHRAE	Gateway
Object_Identifier	BACnetObjectIdentifier	(Binary Value, 1)	R	R
Object_Name	CharacterString	UnoccupiedDeadbandAction	R	R
Object_Type	BACnetObjectType	BINARY_VALUE (5)	R	R
Present_Value	BACnetBinaryPV	INACTIVE (0) / ACTIVE (1)	R	R/W
Description	CharacterString	-	O	-
Status_Flags	BACnetStatusFlags	{FALSE, FALSE, FALSE, FALSE}	R	R
Event_State	BACnetEventState	STATE_NORMAL (0)	R	R
Reliability	BACnetReliability	NO_FAULT_DETECTED (0)	O	R
Out_Of_Service	BOOLEAN	FALSE	R	R
Inactive_Text	CharacterString	Off	O	R
Active_Text	CharacterString	CurrentMode	O	R
Change_Of_State_Time	BACnetDatetime	-	O	-
Change_Of_State_Count	Unsigned	-	O	-
Time_Of_State_Count_Reset	BACnetDatetime	-	O	-
Elapsed_Active_Time	Unsigned	-	O	-
Time_Of_Active_Time_Reset	BACnetDatetime	-	O	-
Minimum_Off_Time	Unsigned32	-	O	-
Minimum_On_Time	Unsigned32	-	O	-
Priority_Array	BACnetPriorityArray	BACnetPriorityArray	R	-
Relinquish_Default	BACnetBinaryPV	INACTIVE (0)	R	-
Time_Delay	Unsigned	-	O	-
Notification_Class	Unsigned	-	O	-
Alarm_Value	BACnetBinaryPV	-	O	-
Event_Enable	BACnetEventTransitionBits	-	O	-
Acked_Transitions	BACnetEventTransitionBits	-	O	-
Notify_Type	BACnetNotifyType	-	O	-
Event_Time_Stamps	BACnetArray[N] of BACnetTimeStamp	-	O	-
Profile_Name	CharacterString	-	O	-

7.3.30. LockRemoteControl (Binary Value Object Type)

It is used to lock or unlock the AC remote controller.

Property Identifier	Property Datatype	Value	ASHRAE	Gateway
Object_Identifier	BACnetObjectIdentifier	(Binary Value, 2)	R	R
Object_Name	CharacterString	LockRemoteControl	R	R
Object_Type	BACnetObjectType	BINARY_VALUE (5)	R	R
Present_Value	BACnetBinaryPV	INACTIVE (0) / ACTIVE (1)	R	R/W
Description	CharacterString	-	O	-
Status_Flags	BACnetStatusFlags	{FALSE, FALSE, FALSE, FALSE}	R	R
Event_State	BACnetEventState	STATE_NORMAL (0)	R	R
Reliability	BACnetReliability	NO_FAULT_DETECTED (0)	O	R
Out_Of_Service	BOOLEAN	FALSE	R	R
Inactive_Text	CharacterString	Unlocked	O	R
Active_Text	CharacterString	Locked	O	R
Change_Of_State_Time	BACnetDatetime	-	O	-
Change_Of_State_Count	Unsigned	-	O	-
Time_Of_State_Count_Reset	BACnetDatetime	-	O	-
Elapsed_Active_Time	Unsigned	-	O	-
Time_Of_Active_Time_Reset	BACnetDatetime	-	O	-
Minimum_Off_Time	Unsigned32	-	O	-
Minimum_On_Time	Unsigned32	-	O	-
Priority_Array	BACnetPriorityArray	BACnetPriorityArray	R	-
Relinquish_Default	BACnetBinaryPV	INACTIVE (0)	R	-
Time_Delay	Unsigned	-	O	-
Notification_Class	Unsigned	-	O	-
Alarm_Value	BACnetBinaryPV	-	O	-
Event_Enable	BACnetEventTransitionBits	-	O	-
Acked_Transitions	BACnetEventTransitionBits	-	O	-
Notify_Type	BACnetNotifyType	-	O	-
Event_Time_Stamps	BACnetArray[N] of BACnetTimeStamp	-	O	-
Profile_Name	CharacterString	-	O	-

7.3.31. OutdoorTemp_status (Analog Input Object Type)

It indicates the outdoor temperature from the outdoor unit sensor.

Property Identifier	Property Datatype	Value	ASHRAE	GATEWAY
Object_Identifier	BACnetObjectIdentifier	(Analog Input, 8)	R	R
Object_Name	CharacterString	OutdoorTemp_status	R	R
Object_Type	BACnetObjectType	ANALOG_INPUT (0)	R	R
Present_Value	REAL	-25 .. 43°C / -13 .. 109.4°F	R	R
Description	CharacterString	-	O	-
Device_Type	CharacterString	-	O	-
Status_Flags	BACnetStatusFlags	{FALSE, FALSE/TRUE, FALSE, FALSE}	R	R
Event_State	BACnetEventState	STATE_NORMAL (0)	R	R
Reliability	BACnetReliability	NO_FAULT_DETECTED (0), UNRELIABLE_OTHER (7)	O	R
Out_Of_Service	BOOLEAN	FALSE	R	R
Update_Interval	Unsigned	-	O	-
Units	BACnetEngineeringUnits	Celsius degrees (62) Fahrenheit degrees (64)	R	R
Min_Pres_Value	REAL	-25°C / -13°F	O	R
Max_Pres_Value	REAL	43°C / 109.4°F	O	R
Resolution	REAL	-	O	-
COV_Increment	REAL	0	O	W
Time_Delay	Unsigned	-	O	-
Notification_Class	Unsigned	-	O	-
High_Limit	REAL	-	O	-
Low_Limit	REAL	-	O	-
Deadband	REAL	-	O	-
Limit_Enable	BACnetLimitEnable	-	O	-
Event_Enable	BACnetEventTransitionBits	-	O	-
Acked_Transitions	BACnetEventTransitionBits	-	O	-
Notify_Type	BACnetNotifyType	-	O	-
Event_Time_Stamps	BACnetArray[N] of BACnetTimeStamp	-	O	-
Profile_Name	CharacterString	-	O	-

NOTE

You can set the temperature scale in Celsius or Fahrenheit via the DIP switches. More information in DIP switches (page 11).

7.3.32. CenterRemote (Multistate Input Object Type)

This object indicates whether only the BMS (Center I, Center II), the wired remote controller (Remote), or both (Center/Remote) can manage the indoor unit.

Property Identifier	Property Datatype	Value	ASHRAE	Gateway
Object_Identifier	BACnetObjectIdentifier	(Multi-state Input, 0)	R	R
Object_Name	CharacterString	CenterRemote	R	R
Object_Type	BACnetObjectType	MULTISTATE_INPUT (13)	R	R
Present_Value	Unsigned	1 .. 4	R	R
Description	CharacterString	-	O	-
Device_Type	CharacterString	-	O	-
Status_Flags	BACnetStatusFlags	{FALSE, FALSE/TRUE, FALSE, FALSE}	R	R
Event_State	BACnetEventState	STATE_NORMAL (0)	R	R
Reliability	BACnetReliability	NO_FAULT_DETECTED (0), UNRELIABLE_OTHER(7)	O	R
Out_Of_Service	BOOLEAN	FALSE	R	R
Number_Of_States	Unsigned	4	R	R
State_Text	BACnetArray[N] of CharacterString	Check the **CenterRemote table** below	O	R
Time_Delay	Unsigned	-	O	-
Notification_Class	Unsigned	-	O	-
Alarm_Values	List of Unsigned	-	O	-
Fault_Values	List of Unsigned	-	O	-
Event_Enable	BACnetEventTransitionBits	-	O	-
Acked_Transitions	BACnetEventTransitionBits	-	O	-
Notify_Type	BACnetNotifyType	-	O	-
Event_Time_Stamps	BACnetArray[N] of BACnetTimeStamp	-	O	-
Profile_Name	CharacterString	-	O	-

Table 12. CenterRemote Table

Present_Value	State_Text
1	Remote Enabled (Center/Remote)
2	Remote ON/OFF Lock (Center I)
3	Remote ALL Lock (Center II)
4	Just Remote (Remote)

7.3.33. DIP_SW_S1_status (Analog Input Object Type)

It indicates the status of the DIP switch block SW1 in decimal value. To get the status of each individual switch of SW1, just convert it to binary. The gateway reads this value only when booting up.

Property Identifier	Property Datatype	Value	ASHRAE	Gateway
Object_Identifier	BACnetObjectIdentifier	(Analog Input, 9)	R	R
Object_Name	CharacterString	DIP_SW_S1_status	R	R
Object_Type	BACnetObjectType	ANALOG_INPUT (0)	R	R
Present_Value	BACnetBinaryPV	0 .. 255	R	R
Description	CharacterString	-	O	-
Device_Type	CharacterString	-	O	-
Status_Flags	BACnetStatusFlags	{FALSE, FALSE, FALSE, FALSE}	R	R
Event_State	BACnetEventState	STATE_NORMAL (0)	R	R
Reliability	BACnetReliability	NO_FAULT_DETECTED (0)	O	R
Out_Of_Service	BOOLEAN	FALSE / TRUE	R	R
Change_Of_State_Time	BACnetDatetime	-	O	-
Change_Of_State_Count	Unsigned	-	O	-
Time_Of_State_Count_Reset	BACnetDatetime	-	O	-
Elapsed_Active_Time	Unsigned	-	O	-
Time_Of_Active_Time_Reset	BACnetDatetime	-	O	-
Time_Delay	Unsigned	-	O	-
Notification_Class	Unsigned	-	O	-
Alarm_Value	BACnetBinaryPV	-	O	-
Event_Enable	BACnetEventTransitionBits	-	O	-
Acked_Transitions	BACnetEventTransitionBits	-	O	-
Notify_Type	BACnetNotifyType	-	O	-
Event_Time_Stamps	BACnetArray[N] of BACnetTimeStamp	-	O	-
Profile_Name	CharacterString	-	O	-
Units	BACnetEngineeringUnits	No units (95)	R	R
COV_Increment	REAL	0	O	W

7.3.34. DIP_SW_S2_status (Analog Input Object Type)

It indicates the status of the DIP switch block SW2 in decimal value. To get the status of each individual switch of SW2, just convert it to binary. The gateway reads this value only when booting up.

Property Identifier	Property Datatype	Value	ASHRAE	Gateway
Object_Identifier	BACnetObjectIdentifier	(Analog Input, 10)	R	R
Object_Name	CharacterString	DIP_SW_S2_status	R	R
Object_Type	BACnetObjectType	ANALOG_INPUT (0)	R	R
Present_Value	BACnetBinaryPV	0 .. 255	R	R
Description	CharacterString	-	O	-
Device_Type	CharacterString	-	O	-
Status_Flags	BACnetStatusFlags	{FALSE, FALSE, FALSE, FALSE}	R	R
Event_State	BACnetEventState	STATE_NORMAL (0)	R	R
Reliability	BACnetReliability	NO_FAULT_DETECTED (0)	O	R
Out_Of_Service	BOOLEAN	FALSE / TRUE	R	R
Change_Of_State_Time	BACnetDatetime	-	O	-
Change_Of_State_Count	Unsigned	-	O	-
Time_Of_State_Count_Reset	BACnetDatetime	-	O	-
Elapsed_Active_Time	Unsigned	-	O	-
Time_Of_Active_Time_Reset	BACnetDatetime	-	O	-
Time_Delay	Unsigned	-	O	-
Notification_Class	Unsigned	-	O	-
Alarm_Value	BACnetBinaryPV	-	O	-
Event_Enable	BACnetEventTransitionBits	-	O	-
Acked_Transitions	BACnetEventTransitionBits	-	O	-
Notify_Type	BACnetNotifyType	-	O	-
Event_Time_Stamps	BACnetArray[N] of BACnetTimeStamp	-	O	-
Profile_Name	CharacterString	-	O	-
Units	BACnetEngineeringUnits	No units (95)	R	R
COV_Increment	REAL	0	O	W

7.3.35. SerialNumber (Analog Input Object Type)

It indicates the serial number of the gateway with the pattern **000EXXXXX**, where:

- **000E** is constant and not included in the Present Value property.
- **XXXXX** is the unique device serial number. This is the information provided by the Present Value.

Property Identifier	Property Datatype	Value	ASHRAE	Gateway
Object_Identifier	BACnetObjectIdentifier	(Analog Input, 11)	R	R
Object_Name	CharacterString	SerialNumber	R	R
Object_Type	BACnetObjectType	ANALOG_INPUT (0)	R	R
Present_Value	BACnetBinaryPV	00000 .. 99999	R	R
Description	CharacterString	-	O	-
Device_Type	CharacterString	-	O	-
Status_Flags	BACnetStatusFlags	{FALSE, FALSE, FALSE, FALSE}	R	R
Event_State	BACnetEventState	STATE_NORMAL (0)	R	R
Reliability	BACnetReliability	NO_FAULT_DETECTED (0)	O	R
Polarity	BACnetPolarity	NORMAL (0)	R	R
Change_Of_State_Time	BACnetDatetime	-	O	-
Change_Of_State_Count	Unsigned	-	O	-
Time_Of_State_Count_Reset	BACnetDatetime	-	O	-
Elapsed_Active_Time	Unsigned	-	O	-
Time_Of_Active_Time_Reset	BACnetDatetime	-	O	-
Time_Delay	Unsigned	-	O	-
Notification_Class	Unsigned	-	O	-
Alarm_Value	BACnetBinaryPV	-	O	-
Event_Enable	BACnetEventTransitionBits	-	O	-
Acked_Transitions	BACnetEventTransitionBits	-	O	-
Notify_Type	BACnetNotifyType	-	O	-
Event_Time_Stamps	BACnetArray[N] of BACnetTimeStamp	-	O	-
Profile_Name	CharacterString	-	O	-
Units	BACnetEngineeringUnits	No units (95)	R	R
COV_Increment	REAL	0	O	W

8. Occupancy Function

The Occupancy function determines the AC unit's behavior depending on the presence or absence of people in the room. This signal is processed directly in the Intesis gateway and has the capacity to modify three parameters of the AC system: Setpoint, Mode, and On/Off.

IMPORTANT
This function requires a presence sensor on the control system (BMS) side, which determines the state of the **Occupancy** object:

- **Occupied**: Someone is in the room.
- **Unoccupied**: No one is in the room.
- **Disabled**: The function is disabled

Besides the Occupancy object, and to adjust the settings of the Occupancy function, the gateway offers these BACnet objects:

- **Occupancy Cool Setpoint (OCS):** Setpoint temperature when the AC unit is in cool mode and someone is present in the room.
- **Unoccupancy Cool SetPoint (UCS):** Setpoint temperature when the AC unit is in cool mode and no one is in the room.
- **Occupancy Heat Setpoint (OHS):** Setpoint temperature when the AC unit is in heat mode and someone is present in the room.
- **Unoccupancy Heat SetPoint (UHS):** Setpoint temperature when the AC unit is in heat mode and no one is in the room.

Figure 4. Temperature setpoint objects related to the room's occupancy status and the AC unit's mode

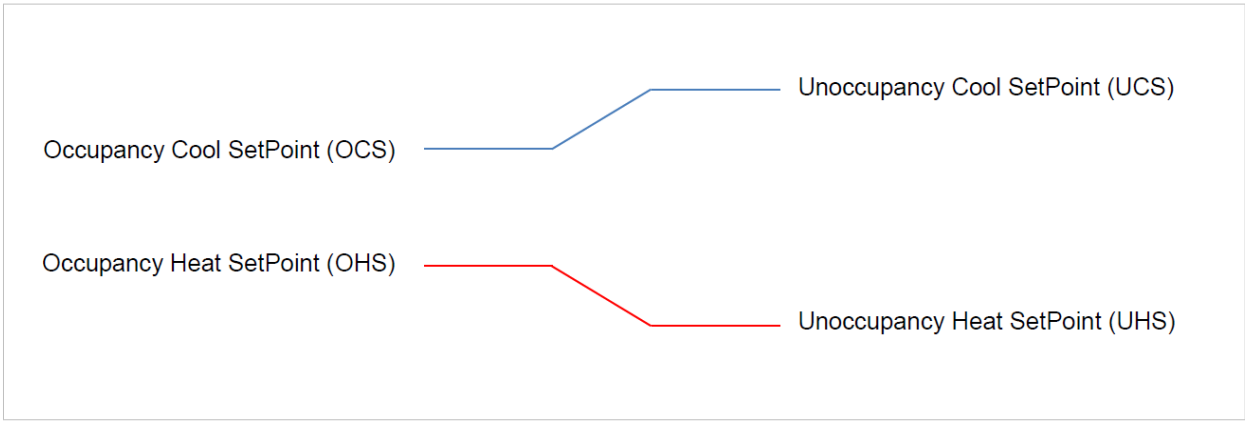

NOTICE
The minimum difference between Cool and Heat setpoints must be 2°C / 4°F.

- **Occupancy Continuous check:** It determines when the gateway checks the room occupancy:
  - If this object's value is 1 (active), the gateway checks the occupancy when the occupancy status and the room temperature change.

- If this object's value is 0 (inactive), the gateway only checks the occupancy when the occupancy status changes.

- **Unoccupied Deadband Action:** It determines the AC unit's behavior when the room is unoccupied and the ambient temperature is within the deadband.
  - If this object's value is 1 (active), the indoor unit will remain on.
  - If this object's value is 0 (inactive), the indoor unit will turn off.

When there is presence in the room, and according to the current room temperature, the AC unit's **mode, setpoint,** and **on/off** will be set to:

Condition	Setpoint	Mode	On/Off
Room temperature > OCS	Current OCS value	Cool	On
Room temperature < OHS	Current OCS value	Heat	On
OCS < Room temperature > OHS	OCS/OHS depending on the current mode (If Fan or Dry mode is active, no setpoint is sent)	Current mode	On

When there is no presence in the room, and according to the current room temperature, the AC unit's **mode, setpoint** and **on/of**f will be set to:

Condition	Setpoint	Mode	On/Off
Room temperature > OCS	Current UCS value	Cool	On
Room temperature < OHS	Current UHS value	Heat	On
OCS < Room temperature > OHS	UCS/UHS depending on the current mode (If Fan or Dry mode is active, no setpoint is sent)	Current mode	On (Deadband action=1)
			Off (Deadband action=0)

NOTICE
Any local change (for example with the remote control) in the Setpoint, Mode, or the On/Off signal will disable the Occupancy function.

9. Ambient Temperature and Virtual Temperature Function

The IN485MHI001R000 gateway enables the use of a temperature sensor from the BACnet-based BMS.

The reason for using this sensor could be that it is better positioned than the sensor in the indoor unit or the wired remote controller. If an indoor unit or wired remote controller is mounted far away, it can lead to a significant difference between the temperature perceived by their sensors and the actual temperature in the occupied space.

Figure 5. In this case, the room temperature is four degrees Celsius less than the temperature perceived by the indoor unit's sensor.

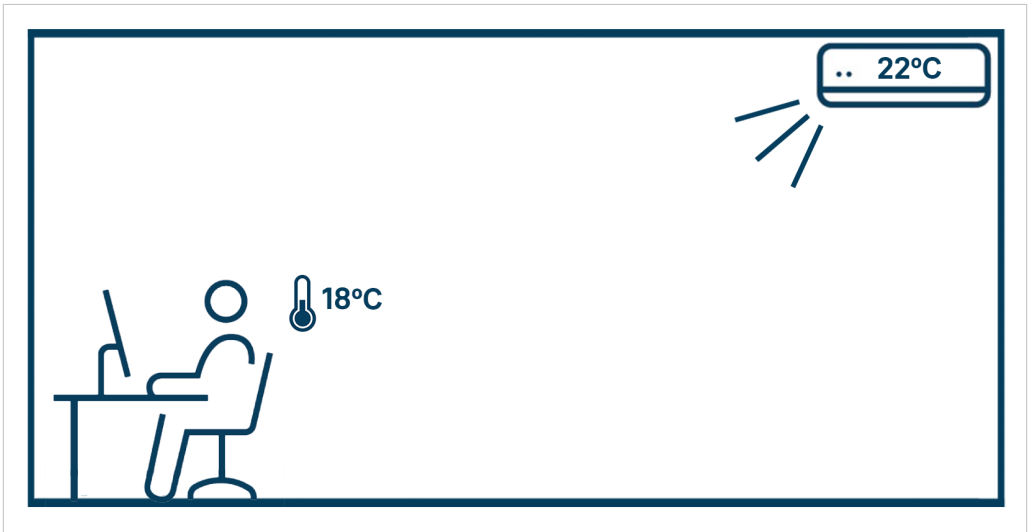

When using the temperature sensor from the BMS side, the IN485MHI001R000 gateway allows two different options:

- Direct overwriting of the AC system reference temperature.
- Activation of the Virtual Temperature function.

As explained below, the choice between these options depends on the role of both the gateway and the Mitsubishi Heavy Industries wired RC. It also depends on the thermostat used by the AC system to determine its reference temperature, which can be either the sensor inside the indoor unit or the sensor inside the wired RC.

DIRECT OVERWRITING OF THE INDOOR UNIT'S REFERENCE TEMPERATURE

1. Set the IN485MHI001R000 gateway as the header of the bus by setting the SW1-1 (DIP switch 1, position 1) ON. See DIP switches (page 11).
2. Set the IN485MHI001R000 gateway to read the temperature provided by the wired RC by setting the SW1-2 (DIP switch 1, position 2) ON. See DIP switches (page 11).
3. Set the Mitsubishi Heavy Industries wired RC as the follower of the bus.

NOTE
Refer to the documentation provided with the Mitsubishi Heavy Industries system to know the needed procedure to set the role of the wired RC.

4. Set the Mitsubishi Heavy Industries AC system to read the temperature provided by the sensor inside the wired RC.

> **NOTE**
> This configuration must be performed by a Mitsubishi Heavy Industries authorized installer through the remote controller.

5. At this point, the indoor unit could report an error warning that there is an abnormality in the wired RC's thermistor.

> **NOTICE**
> This error is reported because no valid value has been written yet as the ambient temperature. Take into consideration that, after commissioning the gateway for the first time, the default value for the BACnet object **RoomTemperature_command (Analog Output)** is -32768, which is an invalid value.

6. Write the value reported by the BMS sensor using the BACnet object **RoomTemperature_command (Analog Output)**.

> **NOTE**
> At this point, any error reported by the indoor unit will disappear. From now on, the AC system will use the value reported by the BACnet temperature sensor as its reference temperature.

ACTIVATION OF THE VIRTUAL TEMPERATURE FUNCTION

> **NOTE**
> Before explaining how to activate the Virtual Temperature function, it is important to understand how this function works.

How the Virtual Temperature function works:

The Virtual Temperature function uses the value reported by the temperature sensor connected to the BMS side to apply a formula that establishes the setpoint temperature for the indoor unit. This recalculated setpoint offsets the difference between the real temperature in the room and the temperature at which the indoor unit is operating.

The formula used by the Virtual Temperature function is the following:

$S_{AC} = T_{AC} – (T_{BMS} – S_{BMS})$

Where:

- S_{AC}: Recalculated temperature setpoint sent to the indoor unit after the gateway applies the formula.
- T_{AC}: Indoor unit's reference temperature.
- T_{BMS}: Ambient temperature reported by the sensor connected to the BMS side.
- S_{BMS}: Temperature setpoint requested from the BMS side.

Once activated, the Virtual Temperature function recalculates the setpoint when any of these values changes.

In practical terms, when you write a value in the BACnet object **RoomTemperature_command (Analog Output)**, the gateway activates the Virtual Temperature function, using this value to recalculate the indoor unit's reference temperature.

How to activate the Virtual Temperature function:

The Virtual Temperature function can be activated with the gateway acting either as the header or the follower of the wired RC bus.

- **Procedure with the gateway acting as the header of the RC bus:**

1. Set the IN485MHI001R000 gateway as the header of the bus by setting the SW1-1 (DIP switch 1, position 1) ON. See DIP switches (page 11).
2. Set the IN485MHI001R000 gateway to read the temperature provided by the indoor unit by setting the SW1-2 (DIP switch 1, position 2) OFF. See DIP switches (page 11).
3. Set the Mitsubishi Heavy Industries wired RC as the follower of the bus.

   NOTE
   Refer to the documentation provided with the Mitsubishi Heavy Industries system to know the needed procedure to set the role of the wired RC.

4. Set the Mitsubishi Heavy Industries AC system to read the temperature provided by the sensor inside the indoor unit.

   NOTE
   This configuration must be performed by a Mitsubishi Heavy Industries authorized installer through the remote controller.

- **Procedure with the gateway acting as the follower of the RC bus:**

1. Set the IN485MHI001R000 gateway as the follower of the bus by setting the SW1-1 (DIP switch 1, position 1) OFF. See DIP switches (page 11).
2. Set the Mitsubishi Heavy Industries wired RC as the header of the bus.

   NOTE
   Refer to the documentation provided with the Mitsubishi Heavy Industries system to know the needed procedure to set the role of the wired RC.

3. Set both the gateway and the AC system to read the temperature from the same source, either from the thermistor inside the indoor unit or the wired RC.
   a. For the gateway, this is done via the SW1-2 (DIP switch 1, position 2):
      – ON: The gateway reads the temperature from the thermistor of the wired RC.
      – OFF: The gateway reads the temperature from the thermistor of the indoor unit.

      To know more, see DIP switches (page 11).
   b. For the AC system, this configuration is done via the wired RC must and must be performed by a Mitsubishi Heavy Industries authorized installer.

Once the roles and reading sources of both the gateway and the wired RC are set, proceed as follows:

1. Write the desired setpoint temperature in the BACnet object **Setpoint_command (Analog Output)**.
2. Read the temperature value reported by a temperature sensor from the BMS side.
3. Write this value in the BACnet object **RoomTemperature_command (Analog Output)**.

NOTE
At this point, the Virtual Temperature function is automatically activated. From now on, the AC system will use the value reported by the formula described above as its reference temperature.

NOTICE
Due to the formula applied by the Virtual Temperature function, the temperature reported by the AC system and the actual ambient temperature may differ. This must not be taken as an error, but as the normal behavior when the Virtual Temperature function is working.

To know more about the BACnet objects dedicated to the temperature signals and to the Virtual Temperature function, see Considerations on Temperature Signals (page 60).

NOTE
When starting up the gateway, the **RoomTemperature_command (Analog Output)**, which is the dedicated object to write the ambient temperature perceived from the BMS side, reports a value of -32768 (0x8000).

NOTICE
When starting up the gateway, the Present_Value property for the RoomTemperature_command object is 0, and the Reliability property displays **UNRELIABLE_OTHER (7)**. This means that no external temperature reference has been provided to the object, so the system is not applying the Virtual Temperature function. However, after receiving the first value, the Reliability property changes to **NO_FAULT_DETECTED (0)**. After that, any value can be used in the temperature range, including 0.

TROUBLESHOOTING

Typical malfunctions with the ambient temperature and the Virtual Temperature function are related to mistakes in the configuration of the gateway's or the wired RC's role, or in the values written in the BACnet objects. If an error occurs, consider the following:

- **The gateway and the wired RC have the correct role.**
  Remember that the gateway can overwrite the reference temperature of the AC system using a temperature sensor from the BMS side only when it is set as the header and the wired RC is set as the follower.
  To set the gateway as the header of the bus, set the SW1-1 (DIP switch 1, position 1) ON. To know more, see Coexistence of the Gateway with a Remote Controller (page 10).
  The role of the wired RC is usually set through a DIP switch mounted on its board, but you should read the documentation delivered with the AC system to ensure the necessary procedure.
- **The gateway and the wired RC are reading the temperature from the same source.**
  Both the gateway and the AC system can be set to read the temperature from the indoor unit or the wired RC. Only when both the gateway and the AC system are set to read the temperature from the wired RC can the gateway overwrite the reference temperature of the AC system using a temperature sensor from the BMS side.
  Set the gateway to read the temperature of the wired RC thermistor by setting the SW1-2 (DIP switch 1, position 2) ON. To know more, see DIP switches (page 11).
- **Valid values are written in the BACnet objects dedicated to the temperature.**[2]
  Pay special attention to the BACnet object **RoomTemperature_command (Analog Output)**, which is dedicated to write the value reported by the BMS sensor.

NOTE
[2] The following section provides an extended explanation of all the BACnet objects dedicated to the temperature signals and to the Virtual Temperature function.

9.1. Considerations on Temperature Signals

NOTE
You can set the temperature signals in degrees Celsius or Fahrenheit via the DIP switch SW2. More information in DIP switches (page 11).

Table 13. Objects dedicated to temperature signals and to the Virtual Temperature function

BACnet object	Function when the Virtual Temperature function is inactive	Function when the Virtual Temperature function is active
Setpoint_status (Analog Input)	It indicates the temperature setpoint sent to the indoor unit. It will report the same value as the value introduced in the Setpoint_command object.	It indicates the recalculated temperature setpoint sent to the indoor unit after the gateway applies the $S_{AC} = T_{AC} - (T_{BMS} - S_{BMS})$ formula. It may report a value different from that introduced in the Setpoint_command object.
Setpoint_command (Analog Output)	It is used to request the temperature setpoint from the BMS side. It will report the same value as a wired remote controller connected to the indoor unit (if available).	It is used to request the temperature setpoint from the BMS side. It may report a value different from that reported by a wired remote controller connected to the indoor unit (if available).
RoomTemperature_status (Analog Input)	It indicates the ambient temperature perceived by the sensor from the AC system side (the sensor inside the indoor unit or inside the wired remote controller, if available).	It indicates the ambient temperature perceived by the sensor from the AC system side (the sensor inside the indoor unit or inside the wired remote controller, if available).
RoomTemperature_command (Analog Output)	It is used to activate the Virtual Temperature function by writing the value reported from a BMS side sensor.	It indicates the temperature reported from a BMS side sensor.
VirtualTemperatureActive (Binary Input)	It reports a value of 0	It reports a value of 1
UserSetpoint_status (Analog Input)	It indicates the temperature setpoint requested from the BMS side.	It indicates the original temperature setpoint requested from the BMS side.

VIRTUAL TEMPERATURE FUNCTION EXAMPLE CASE

Imagine a very cold room with a temperature of 10°C. There's an AC indoor unit mounted in the ceiling, which is very high.

The technician responsible for the BMS wants to raise the room temperature to 20°C. To achieve this, she accesses the console and sets this value in the BACnet object **Setpoint_command (Analog Output)**. The same value of “20” is also reflected in the BACnet object **Setpoint_status (Analog Input)**.

A few minutes later, the technician checks the BACnet object **RoomTemperature_status (Analog Input)** to determine the temperature reported by the indoor unit’s sensor, which reads 17°C. However, the BMS sensor in the room reports a temperature of 13°C. The technician knows that the BMS sensor is better positioned than the indoor unit’s sensor. Unfortunately, the indoor unit does not allow the gateway a direct overwriting of the value reported by its sensor temperature. To address this, the technician activates the Virtual Temperature function.

To activate it, she writes the temperature currently perceived by the BMS sensor (13°C) into the BACnet object **RoomTemperature_command (Analog Output)**. As soon as she inputs “13” into that object/register, the BACnet object **VirtualTemperatureActive (Binary Input)** transitions from “0” to “1.” This indicates that the Virtual Temperature function is now active and will continuously apply the formula to recalculate the setpoint temperature sent to the indoor unit.

At this moment, the formula values are: 17-(13-20)=24. Therefore, the Virtual Temperature function is currently sending a setpoint of 24°C to the indoor unit, and this value is reflected in the BACnet object **Setpoint_status (Analog Input)**.

After a few minutes, the technician checks the BACnet object **RoomTemperature_command (Analog Output)** to find the temperature perceived by the BMS sensor: 19°C. Then, she looks at the BACnet object **RoomTemperature_status (Analog Input)**, which reports the temperature sensed by the indoor unit: 24°C.

At this point, the formula applied by the Virtual Temperature function is based on these numbers: 24-(19-20)=25. The technician observes the BACnet object **Setpoint_status (Analog Input)** and realizes that the Virtual Temperature function has established the setpoint at 25°C.

10. Error Codes

NOTE
The error codes displayed in the remote controller may vary depending on the AC unit model. Read the documentation of your unit to know its specific error codes.

Error code	Code in the wired RC	Description
0	N/A	No active error
1	E1	Transmission error between the indoor unit and the remote controller
2	E2	Indoor unit address duplication
3	E3	Indoor unit, outdoor unit addressing error
4	E4	Invalid indoor unit address
5	E5	Communication error between indoor unit and outdoor unit
6	E6	Indoor unit heat exchanger sensor disconnection
7	E7	Indoor unit return air sensor disconnection
8	E8	Abnormal indoor unit heat exchanger temperature
9	E9	Blocked drain error, malfunction of optional parts
10	E10	Excessive number of indoor units connected to one remote controller
11	E11	Remote control addressing setting (RAS) is done when plural remote controllers are connected
12	E12	Invalid indoor unit address setting
13	E13	SAF malfunction
14	E14	Communication error between master and slave indoor units
15	E15	Indoor unit supply air sensor disconnection
16	E16	Indoor unit fan motor malfunction
17	E17	Gas sensor malfunction
19	E19	Setting of operation check
20	E20	Indoor unit fan motor rotation
28	E28	Return air sensor on remote controller disconnection
30	E30	Cross connection between piping and wiring
31	E31	Outdoor unit address duplication
32	E32	Reverse phase (missing phase on primary side)
33	E33	Over current on the compressor
34	E34	Missing phase
35	E35	Outdoor unit abnormal heat exchanger temperature
36	E36	Abnormal discharge pipe temperature
37	E37	Outdoor heat exchanger sensor disconnection
38	E38	Outdoor unit return air sensor disconnection
39	E39	Discharge pipe temperature sensor disconnection
40	E40	Abnormal high pressure
41	E41	Overheat of the power transistor
42	E42	Current cut
43	E43	Excessive number of connected indoor units
44	E44	Abnormal compressor bottom temperature
45	E45	Communication error between inverter and outdoor unit main PCB
46	E46	Mixed automatic address setting (AAS) and remote control addressing setting (RAS)
47	E47	Abnormal compressor oil pressure/voltage

Error code	Code in the wired RC	Description
48	E48	Outdoor unit fan motor error
49	E49	Low pressure error/Service valve closed
50	E50	Ice storage unit error
51	E51	Abnormal freezing, insufficient water supply/Inverter error
52	E52	Water temperature sensor disconnection
53	E53	Suction pipe temperature sensor disconnection
54	E54	High/Low pressure sensor anomaly
55	E55	Underneath temperature sensor disconnection
56	E56	Power transistor temperature sensor disconnection
57	E57	Insufficient gas charge
58	E58	Current safe
59	E59	Outdoor unit failure/Compressor startup failure
60	E60	Compressor rotor lock
61	E61	Communication error among outdoor unit
62	E62	Outdoor unit address error
63	E63	Emergency stop
64	E64	Coolant failure
65	E65	System malfunction when PAC I/F is used
66	E66	I/F address duplication
67	E67	V-multi excess number of indoor units
68	E68	Communication error between V-multi and the indoor unit
70	E70	Communication error between CC1 - indoor unit
71	E71	Communication error between NR and the indoor unit
72	E72	Communication error between CC2 and the indoor unit
73	E73	Communication error between CC3 and the indoor unit
74	E74	Address duplication for network equipment
75	E75	Communication circuit failure in network optional equipment
80	E80	Abnormal engine water temp
81	E81	Abnormal oil pressure of engine
82	E82	Too much revolution of engine
83	E83	Too less revolution of engine
84	E84	Engine startup failure
85	E85	Engine stop failure
86	E86	Oil pressure sensor disconnection
87	E87	Water temperature sensor disconnection
88	E88	Engine oil failure
89	E89	Other engine failure
90	E90	Actuator failure
65535	-	Error communication between the gateway and the AC unit

NOTE
If you detect a non-listed error code, please contact Mitsubishi Heavy Industries technical support.