ENGLISH

IN485MIT001I000 GATEWAY

Mitsubishi Electric Residential, Mr. Slim, and City Multi Systems to BACnet MS/TP

USER MANUAL
Version 1.2.7
Publication date 2024-09-17

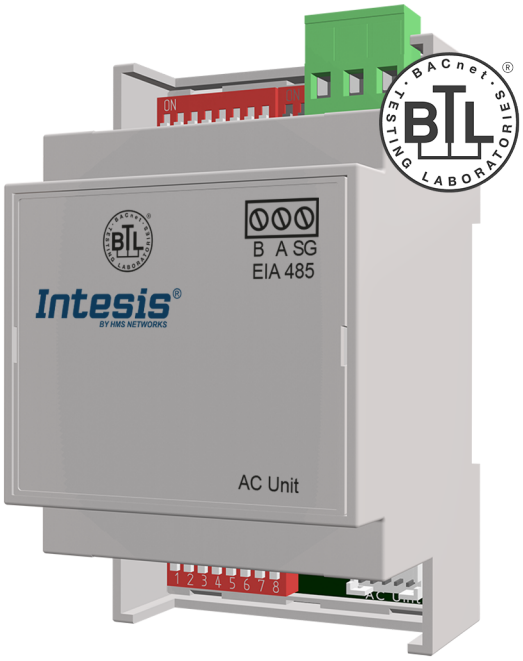

14 rue Edouard Petit
42000 St-Etienne
Tel : +33 477 92 03 56
Email : contact@rg2i.com
www.rg2i.com

Copyright © 2024 Intesis

Disclaimer

The information in this document is for informational purposes only. Please inform HMS Networks of any inaccuracies or omissions found in this document. HMS Networks disclaims any responsibility or liability for any errors that may appear in this document.

HMS Networks reserves the right to modify its products in line with its policy of continuous product development. The information in this document shall therefore not be construed as a commitment on the part of HMS Networks and is subject to change without notice. HMS Networks makes no commitment to update or keep current the information in this document.

The data, examples and illustrations found in this document are included for illustrative purposes and are only intended to help improve understanding of the functionality and handling of the product. In view of the wide range of possible applications of the product, and because of the many variables and requirements associated with any particular implementation, HMS Networks cannot assume responsibility or liability for actual use based on the data, examples or illustrations included in this document nor for any damages incurred during installation of the product. Those responsible for the use of the product must acquire sufficient knowledge in order to ensure that the product is used correctly in their specific application and that the application meets all performance and safety requirements including any applicable laws, regulations, codes and standards. Further, HMS Networks will under no circumstances assume liability or responsibility for any problems that may arise as a result from the use of undocumented features or functional side effects found outside the documented scope of the product. The effects caused by any direct or indirect use of such aspects of the product are undefined and may include e.g. compatibility issues and stability issues.

Table of Contents

1. Description, Compatible AC systems, and Order Codes 1

2. General Information 2

2.1. Intended Use of the User Manual 2
2.2. General Safety Information 2
2.3. Admonition Messages and Symbols 3

3. Quickstart Guide for the IN485MIT001I000 Gateway 4

4. Overview 5

4.1. Inside the Package 5
4.2. Main Features 5
4.3. Gateway Capacity 6
4.4. General Functionality 6

5. Hardware 7

5.1. Mounting 7
5.2. Connection Procedure 8
5.3. DIP switches 10
5.4. LED Indicators 12
5.5. Technical Specifications 13
5.6. Dimensions 13

6. Restore the Factory Settings 14

7. Objects 15

7.1. Supported Object Types 15
7.2. Member Objects 15
7.2.1. Type: Gateway 15
7.2.2. Type: Indoor Unit 15
7.3. Objects and Properties 17
7.3.1. Mitsubishi Electric AC Gateway (Device Object Type) 17
7.3.2. OnOff_status (Binary Input Object Type) 19
7.3.3. OnOff_command (Binary Output Object Type) 20
7.3.4. Mode_status (Multistate Input Object Type) 21
7.3.5. Mode_command (Multistate Output Object Type) 22
7.3.6. UserSetpoint_status (Analog Input Object Type) 23
7.3.7. Setpoint_status (Analog Input Object Type) 24
7.3.8. Setpoint_command (Analog Output Object Type) 25
7.3.9. FanSpeed_status (Multistate Input Object Type) 26
7.3.10. FanSpeed_command (Multistate Output Object Type) 27
7.3.11. AirDirectionUD_status (Multistate Input Object Type) 28
7.3.12. AirDirectionUD_command (Multistate Output Object Type) 29
7.3.13. AirDirectionLR_status (Multistate Input Object Type) 30
7.3.14. AirDirectionLR_command (Multistate Output Object Type) 31
7.3.15. RoomTemperature_status (Analog Input Object Type) 32
7.3.16. RoomTemperature_command (Analog Output Object Type) 33
7.3.17. ErrorCode (Analog Input Object Type) 34
7.3.18. ErrorCodeM (Multistate Input Object Type) 35
7.3.19. ErrorActive (Binary Input Object Type) 36
7.3.20. OnTimeCounter (Analog Value Object Type) 37
7.3.21. VirtualTemperatureActive (Binary Input Object Type) 38
7.3.22. Occupancy (Multistate Value Object Type) 39

7.3.23. OccupiedCoolSetPoint (Analog Value Object Type) 40
7.3.24. OccupiedHeatSetPoint (Analog Value Object Type) 41
7.3.25. UnoccupiedCoolSetPoint (Analog Value Object Type) 42
7.3.26. UnoccupiedHeatSetPoint (Analog Value Object Type) 43
7.3.27. OccupancyContinuousCheck (Binary Value Object Type) 44
7.3.28. UnoccupiedDeadbandAction (Binary Value Object Type) 45
7.3.29. LockRemoteControl (Binary Value Object Type) 46
7.3.30. DIP_SW_S1_status (Analog Input Object Type) 47
7.3.31. DIP_SW_S2_status (Analog Input Object Type) 48
7.3.32. SerialNumber (Analog Input Object Type) 49

8. Occupancy Function 50

9. Virtual Temperature Function 52

9.1. Considerations on Temperature Signals 53

10. Error Codes 55

1. Description, Compatible AC systems, and Order Codes

BACnet MS/TP gateway for Mitsubishi Electric air conditioners.

Compatible with residential, Mr. Slim, and City Multi air conditioning systems commercialized by Mitsubishi Electric.

Use the compatibility tool to get a complete list of compatible units: https://compatibility.intesis.com/

ORDER CODE	LEGACY ORDER CODE
IN485MIT001I000	INBACMIT001I100

2. General Information

2.1. Intended Use of the User Manual

This manual contains the main features of this Intesis gateway and the instructions for its appropriate installation, configuration, and operation.

Any person who installs, configures, or operates this gateway or any associated equipment should be aware of this manual's contents.

Keep this manual for future reference during the installation, configuration, and operation.

2.2. General Safety Information

IMPORTANT
Follow these instructions carefully. Improper work may seriously harm your health and damage the gateway and/or any other equipment connected to it.

Only technical personnel, following these instructions and the country legislation for installing electrical equipment, can install and manipulate this gateway.

Install this gateway indoors, in a restricted access location, avoiding exposure to direct solar radiation, water, high relative humidity, or dust.

Preferably, mount this gateway on a DIN rail inside a grounded metallic cabinet, following the instructions in this manual.

If mounting on a wall, firmly fix this gateway on a non-vibrating surface, following the instructions in this manual.

All wires (for communication and power supply, if needed) must only be connected to networks with indoor wiring. All communication ports are considered for indoor use and must only be connected to SELV circuits.

Disconnect all systems from power before manipulating and connecting them to the gateway.

Respect the expected polarity of power and communication cables when connecting them to the gateway.

This Intesis gateway is designed for installation in an enclosure. When the device is mounted outside an enclosure, precautions should be taken to avoid electrostatic discharges to the unit in environments with static levels above 4 kV. When working in an enclosure (e.g., making adjustments, setting switches, etc.), typical anti-static precautions should be observed before touching the unit.

Binary inputs, if present, are potential-free contact. Do not connect any voltage.

Safety instructions in other languages can be found here.

2.3. Admonition Messages and Symbols

CAUTION
Instruction that must be followed to avoid a potentially hazardous situation that, if not avoided, could result in minor or moderate injury.

IMPORTANT
Instruction that must be followed to avoid a risk of reduced functionality and/or damage to the equipment or to avoid a network security risk.

NOTE
Additional information which may facilitate installation and/or operation.

TIP
Helpful advice and suggestions.

NOTICE
Remarkable Information.

3. Quickstart Guide for the IN485MIT001I000 Gateway

IMPORTANT
Disconnect all systems from power before connecting them to the gateway.

1. Mount the gateway in the desired installation site. This gateway can be mounted over a DIN rail, a wall, or inside the indoor unit (in some indoor unit models only). See details in Mounting (page 7).

   NOTE
   DIN rail mounting inside a grounded cabinet or metal enclosure is recommended.

2. Connect the gateway to the BACnet network via its EIA-485 port.
3. Connect the gateway to the indoor unit using the supplied AC connection cable. See details in Connection Procedure (page 8).
4. Configure the gateway using the built-in DIP switches. See details in DIP switches (page 10).
5. Check the communication performance between the BACnet bus and the AC system through the gateway's LED indicators. See details in LED Indicators (page 12).
6. The Intesis gateway is ready to be used in your system.

4. Overview

Figure 1. Integration of Mitsubishi Electric AC units into a BACnet installation using the Intesis IN485MIT001I000 gateway

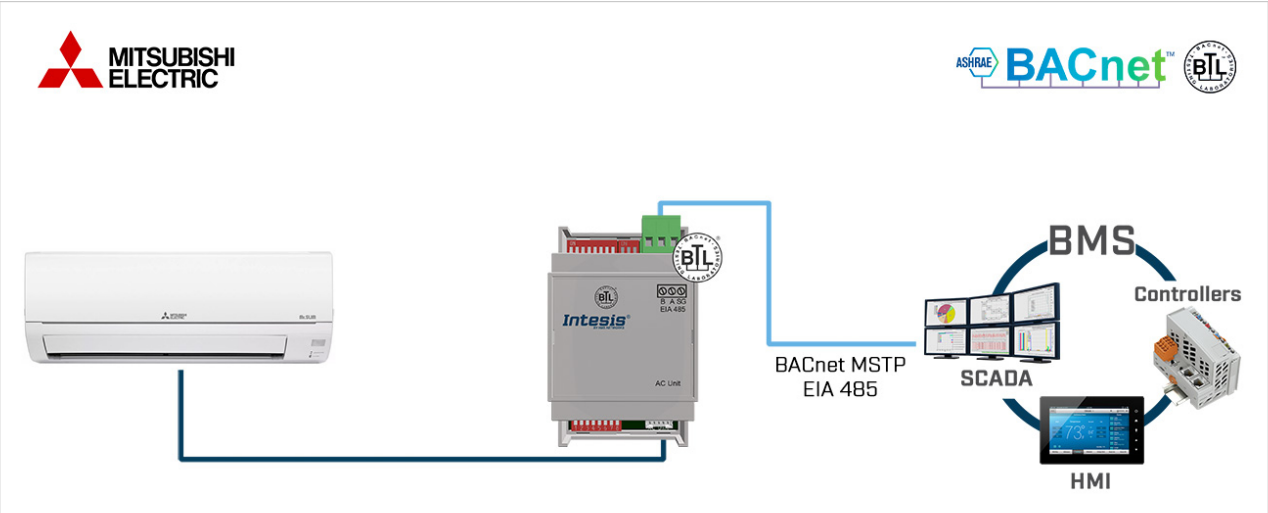

NOTE
This document assumes that the user is familiar with BACnet and Mitsubishi Electric technologies and their technical terms.

4.1. Inside the Package

Items included:

- Intesis IN485MIT001I000 gateway
- Installation guide
- AC unit connection cable

4.2. Main Features

- BTL mark ensures full interoperability with BACnet devices.
- Configuration with onboard DIP switches.
- Quick and easy installation: Set the DIP switches, plug, and play.
- External power supply not required.
- Simultaneous control of the AC unit via both the remote controller and the BMS (BACnet MS/TP).
- Reduced dimensions: 93 x 53 x 58 mm.
- Mountable on DIN rail, wall, or even inside the indoor unit in some models of AC.
- Significant reduction of the HVAC system energy consumption.
- Three-year warranty.

4.3. Gateway Capacity

This Intesis gateway can integrate one single Mitsubishi Electric AC unit and its associated elements.

4.4. General Functionality

With this Intesis IN485MIT001I000 gateway, you can easily integrate Mitsubishi Electric domestic, Mr. Slim, and City Multi air conditioning systems into a system based on BACnet MS/TP. To do so, the gateway acts as a server device of the installation itself, accessing all signals from the AC indoor unit.

The gateway is continuously polling the AC unit, storing in its memory the current status of every signal you want to track and serving this data to the control system when requested. The gateway also sends the requested commands to the indoor unit.

5. Hardware

5.1. Mounting

Mount the gateway inside the AC indoor unit, over a wall, or over a DIN rail.

IMPORTANT
Do not mount the gateway in air-handling units or conducts.

NOTE
DIN rail mounting inside a grounded metallic cabinet is recommended.

Mounting the gateway inside the AC indoor unit

1. Look for the proper place to mount the gateway, taking into consideration the following:

   IMPORTANT
   - Keep communication cables away from power and ground wires.
   - Ensure the gateway does not block any mobile parts of the AC unit.

2. Place the gateway on top of a secure, plain surface.
3. Use double-sided tape to ensure a secure fixing if needed.

Wall mounting

1. Press the rear panel clips outwards until you hear a *click*.
2. Use the clip holes to screw the gateway to the wall.
3. Make sure the gateway is firmly fixed.

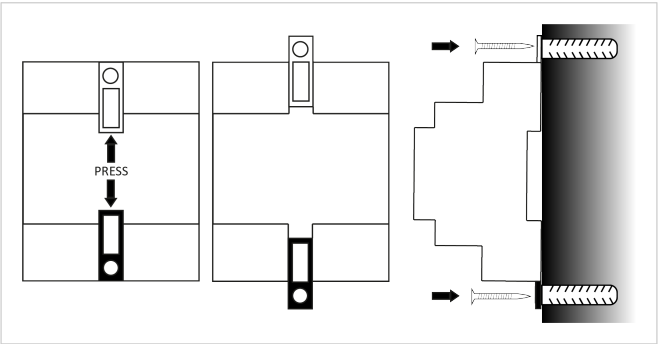

DIN rail mounting

Keep the clips in its original position.

1. Fit the gateway's top-side clip in the upper edge of the DIN rail.
2. Press the low side of the gateway gently to lock it in the DIN rail.
3. Make sure the gateway is firmly fixed.

NOTE
For some DIN rails, to complete step 2, you may need a small screwdriver or similar to pull the bottom clip down.

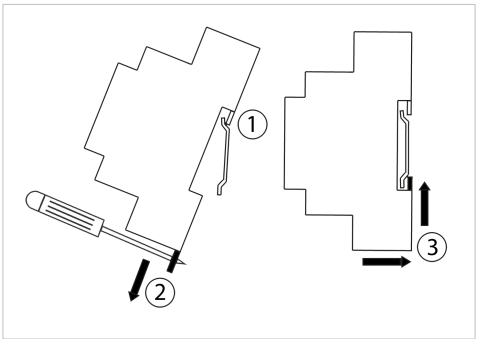

5.2. Connection Procedure

CAUTION
Disconnect all systems from power before connecting them to the gateway.

IMPORTANT
Keep communication cables away from power and ground wires.

Figure 2. Wiring diagram (wire colors are indicative only. The AC unit cable may have four or five wires)

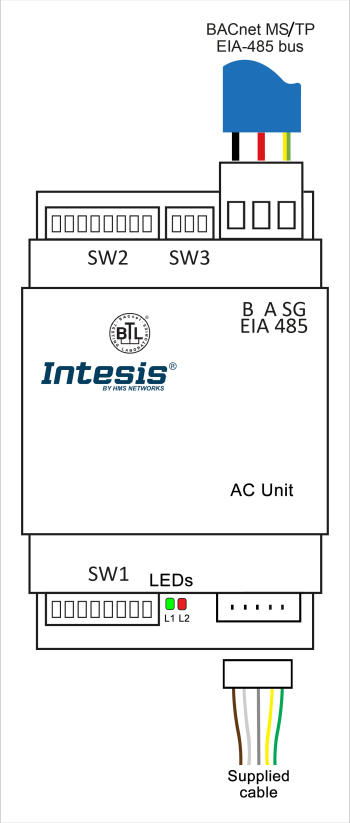

Connection to the AC indoor unit

NOTE
Mount the gateway in the desired place before wiring it.

1. Use the supplied cable to connect the AC unit and the gateway:

   IMPORTANT
   This cable is 1.50 m (4.9 feet) long. Its modification in length may affect the correct operation of the gateway.

   a. **AC unit connection:** Plug the end connector, the one on the longest unsheathed part of the cable, into the socket CN105 (CN92 in some units) of the AC unit control board.

   b. **Gateway connection:** Plug the other end connector, the one on the shortest unsheathed part of the cable, into the socket labeled as **AC Unit**.

Connection to the BACnet MS/TP bus

2. Connect the BACnet MS/TP bus to the EIA-485 port of the gateway.

   IMPORTANT
   Observe polarity: B-, A+, and SG for signal ground.

   IMPORTANT
   - EIA-485 bus doesn't allow loop or star topologies.
   - Maximum length for the EIA-485 bus is 1200 meters (3937 feet).

   EIA-485 BUS. TERMINATION RESISTORS AND FAIL-SAFE BIASING MECHANISM
   The EIA-485 bus requires a 120Ω terminator resistor at each end of the bus to avoid signal reflections.

   In order to prevent fail status detections by the receivers, which are "listening" to the bus, when all the transmitters' outputs are in three-state (high impedance), a fail-safe biasing mechanism is required. This mechanism provides a safe status (a correct voltage level) in the bus when all the transmitters' outputs are in three-state.

   The IN485MIT001I000 gateway includes an on-board terminator resistor of 120Ω that can be connected to the EIA-485 bus by using DIP switch SW3.

   - **SW3, Position 1:**
     ON: 120 Ω termination active.
     OFF: 120 Ω termination inactive (default position).

   Some BACnet MS/TP EIA-485 Master devices can provide also internal 120Ω terminator resistor and/or fail-safe biasing. Consult the technical documentation of the Master device connected to the EIA-485 network in each case.

   If the termination resistor is enabled and you install the gateway at one of the ends of the bus, do not install an additional termination resistor at that end.

3. Reconnect all systems to power.

5.3. DIP switches

The gateway includes three DIP switches: SW1 (8 switches) at the bottom and SW2 (8 switches) and SW3 (3 switches) at the top.

IMPORTANT
The DIP switches configuration will only take effect after rebooting the gateway.

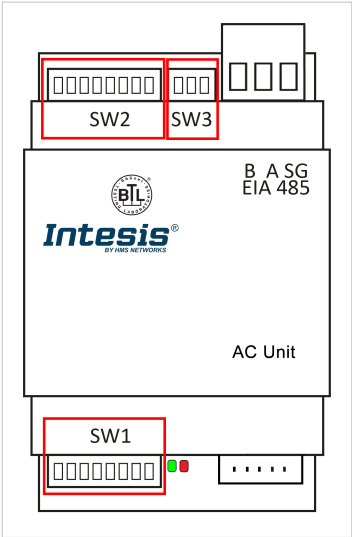

Table 1. SW1 (P6 to P8): BACnet MS/TP baudrate

Binary value	Switches								Description
b0 .. b7	1	2	3	4	5	6	7	8	
X X X X X 0 0 0	X	X	X	X	X	OFF	OFF	OFF	Autobaudrate (default value)
X X X X X 1 0 0	X	X	X	X	X	ON	OFF	OFF	9600 bps
X X X X X 0 1 0	X	X	X	X	X	OFF	ON	OFF	19200 bps
X X X X X 1 1 0	X	X	X	X	X	ON	ON	OFF	38400 bps
X X X X X 0 0 1	X	X	X	X	X	OFF	OFF	ON	57600 bps
X X X X X 1 0 1	X	X	X	X	X	ON	OFF	ON	76800 bps
X X X X X 0 1 1	X	X	X	X	X	OFF	ON	ON	115200 bps
X X X X X 1 1 1	X	X	X	X	X	ON	ON	ON	Autobaudrate

NOTE
If **Autobaudrate** is selected, the gateway will scan the network to find any other BACnet MS/TP device and will match its baudrate. Once detected, the baudrate will only be modified after a reset/reboot of the gateway.

Table 2. SW2 (P1 to P7): BACnet MS/TP MAC address; (P8): Temperature unit (°C/°F)

Binary value	Switches								MAC address	Description
b0 .. b7	1	2	3	4	5	6	7	8		
0 0 0 0 0 0 0 X	OFF	OFF	OFF	OFF	OFF	OFF	OFF	X	0	-
1 0 0 0 0 0 0 X	ON	OFF	OFF	OFF	OFF	OFF	OFF	X	1	-
0 1 0 0 0 0 0 X	OFF	ON	OFF	OFF	OFF	OFF	OFF	X	2	-
1 1 0 0 0 0 0 X	ON	ON	OFF	OFF	OFF	OFF	OFF	X	3	-
...	...							...	...	-
1 0 1 1 1 1 1 X	ON	OFF	ON	ON	ON	ON	ON	X	125	-
0 1 1 1 1 1 1 X	OFF	ON	ON	ON	ON	ON	ON	X	126	-
1 1 1 1 1 1 1 X	ON	ON	ON	ON	ON	ON	ON	X	127	-
X X X X X X X 0	X	X	X	X	X	X	X	OFF	-	Temperature values in BACnet are represented in Celsius degrees (default value)
X X X X X X X 1	X	X	X	X	X	X	X	ON	-	Temperature values in BACnet are represented in Fahrenheit degrees

NOTE
By default, the **Device instance** base is 246000. Setting the SW2 switches, you can add from 0 to 127, so the final Device instance address can be from 246000 to 246127.

IMPORTANT
If you overwrite the **Device instance** object from the BMS side (for example, using the control terminal), this function to set up the **Device instance** with the SW2 switches will be deactivated. To activate this function again, a factory reset is needed.

Table 3. SW3 (P1 to P3): BACnet polarization and termination resistor

Binary value	Switches			Description
b0 .. b2	1	2	3	
0 X X	OFF	X	X	EIA-485 bus without termination resistor. The gateway is not at one end of the EIA-485 bus (default value)
1 X X	ON	X	X	120 Ω termination resistor active. The gateway is at one end of the EIA-485 bus
X 0 0	X	OFF	OFF	No bus polarization (default value)
X 1 1	X	ON	ON	Bus polarization active

5.4. LED Indicators

There are two LEDs at the lower side of the gateway, between the DIP switch block SW1 and the **AC Unit** connector.

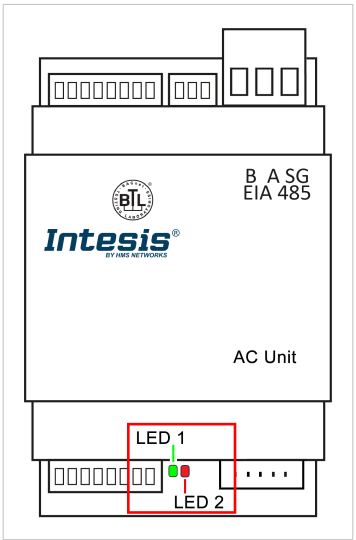

When powering the gateway up, both LEDs blink once and then turn off. After that, LEDs will behave as described in the table below:

Table 4. LED status table

LED	Status	Description
L1 Green BACnet	ON	BACnet MS/TP link performed
	Flickering	Activity on the BACnet MS/TP bus
	OFF	BACnet MS/TP link not performed
L2 Red AC unit	ON	AC communication error
	Blinking	AC unit error
	Flashing	AC communication OK

LED PATTERNS

- **ON**: 100% on
- **Flickering**: irregular cycle (90% on - 10% off approx)
- **Blinking**: 50% on - 50% off
- **Flashing**: 10% on - 90% off
- **OFF**: 100% off

5.5. Technical Specifications

Housing	Plastic, type PC (UL 94 V-0) Net dimensions (HxWxD): 93 x 53 x 58 mm / 3.7 x 2.1 x 2.3” Color: Light grey. RAL 7035
Weight	85 g (3 oz)
Terminal wiring	Wire cross-section/gauge per terminal: One core: 0.2 .. 2.5 mm^2 (24 .. 11 AWG) Two cores: 0.2 .. 1.5mm^2 (24 .. 15 AWG) Three cores: Not permitted Use solid or stranded wires (twisted or with ferrule).
Mounting	Wall, DIN rail, or inside the indoor unit
EIA-485 port **BACnet MS/TP**	1 x pluggable terminal block (3 poles: B, A, and SG)
AC unit port	1 x Specific socket
LED indicators	2 x Communication status
DIP switches	SW1: Baudrate configuration SW2: MAC address and temperature unit SW3: Bus polarization and termination
Operational and storage temperature	Celsius: Op: 0 to +70°C; St: -20 to 85°C Fahrenheit: Op: 32 to 158°F; St: -4 to 185°F
Operational and storage humidity	5% to 95% RH non-condensing
Isolation Voltage	1500 VDC
Isolation resistance	1000 MΩ

5.6. Dimensions

Net dimensions (HxWxD):

Millimeters: 93 x 53 x 58 mm

Inches: 3.66 x 2.08 x 2.28"

IMPORTANT
Leave enough clear space to wire the gateway easily and for the subsequent manipulation of elements such as connectors, DIP switches, etc.

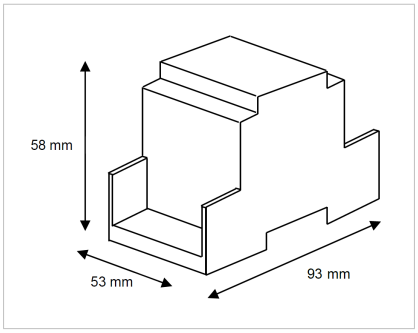

6. Restore the Factory Settings

To restore the gateway to its factory settings, proceed as follows:

1. Set all switches from DIP switches SW1 and SW2 to the ON position.
2. Reboot the gateway:
   a. Power it OFF.
   b. Power it ON.

   NOTE
   To turn the gateway OFF, disconnect it from the AC unit and from the power supply, if there is one. To turn the gateway ON, reestablish those connections.

3. After the reboot, LEDs will blink with the SOS Morse sequence:
   a. Three short blinks
   b. Three longer blinks
   c. Three short blinks
4. Set all switches from DIP switches SW1 and SW2 DIP to the OFF position before 30 seconds pass.

   IMPORTANT
   If you take longer than 30 seconds, all LEDs will turn off, meaning that the procedure has failed. To retry it, go to step 1 and begin the procedure again.

After this procedure, the LED will flash red, meaning that the gateway is already restored to the factory settings.

To continue working with the gateway, proceed as usual:

1. Set the DIP switches again depending on the desired configuration.
2. Reset the device:
   a. Power it OFF.
   b. Power it ON.

7. Objects

7.1. Supported Object Types

Object type	ID
Analog-Input	0
Analog-Output	1
Analog-Value	2
Binary-Input	3
Binary-Output	4
Binary-Value	5
Device	8
Multistate-Input	13
Multistate-Output	14
Multistate-Value	19

7.2. Member Objects

7.2.1. Type: Gateway

Object name	Description	Object type	Object instance
IN485MIT001I000	Mitsubishi Electric AC gateway	8: Device	246000 (default)

7.2.2. Type: Indoor Unit

Object name	Object type	Object instance
OnOff_status	BI	0
OnOff_command	BO	0
Mode_status	MI	0
Mode_command	MO	0
SetPoint_status	AI	0
UserSetpoint_status	AI	17
Setpoint_command	AO	0
VirtualTempActive	BI	14
FanSpeed_status	MI	1
FanSpeed_command	MO	1
AirDirectionUD_status	MI	2
AirDirectionUD_command	MO	2
AirDirectionLR_status	MI	3
AirDirectionLR_command	MO	3
RoomTemperature_status	AI	1
RoomTemperature_command	AO	1
ErrorCode	AI	2
ErrorCodeM	MI	4
ErrorActive	BI	1
OnTimeCounter	AV	0
Occupancy	MV	0
OccupiedCoolSetpoint	AV	1

Object name	Object type	Object instance
OccupiedHeatSetpoint	AV	2
UnoccupiedCoolSetpoint	AV	3
UnoccupiedHeatSetpoint	AV	4
OccupancyContinuousCheck	BV	0
UnoccupiedDeadBandAction	BV	1
LockRemoteControl	BV	2
DIP_SW_S1_status	AI	9
DIP_SW_S2_status	AI	10
SerialNumber	AI	11

7.3. Objects and Properties

7.3.1. Mitsubishi Electric AC Gateway (Device Object Type)

Object_Identifier: The gateway can be identified in the BACnet network automatically or manually:

- **Automatic addressing (default):** This mode uses a base address of 246000 + the MAC address number selected in the DIP switch SW2.
- **Manual addressing:** The gateway switches to this mode when this property receives a value from the BACnet side.

> **IMPORTANT**
> During the manual addressing mode, the gateway will not consider the MAC address configured with the DIP switch SW2.

> **IMPORTANT**
> If the **Object_Identifier** is overwritten from the BACnet side, the DIP switch SW2 configuration will not be considered for the Device instance calculation until the gateway is reset to the factory settings. See Restore the Factory Settings (page 14).

Object_name: In the **Device Object**, is configurable writing directly on this property.

Description: In the **Device Object**, is configurable writing directly on the property. Max. length: 63 characters.

Property Identifier	Property Datatype	Value	ASHRAE	Gateway
Object_Identifier	BACnetObjectIdentifier	Device, 246000 (default value)	R	W
Object_Name	CharacterString	IN485MIT001I000	R	W
Object_Type	BACnetObjectType	DEVICE (8) (Device Object Type)	R	R
System_Status	BACnetDeviceStatus	OPERATIONAL (0)	R	R
Vendor_Name	CharacterString	HMS Industrial Networks SLU	R	R
Vendor_Identifier	Unsigned16	246	R	R
Model_Name	CharacterString	IN485MIT001I000	R	R
Firmware_Revision	CharacterString	1.0.0.0	R	R
Application_Software_Version	CharacterString	1.0.0.0	R	R
Location	CharacterString	""	O	-
Description	CharacterString	Mitsubishi Electric AC interface	O	W
Protocol_Version	Unsigned	1	R	R
Protocol_Revision	Unsigned	12	R	R
Protocol_Services_Supported	BACnetServiceSupported	-	R	R
Protocol_Object_Types_Supported	BACnetObjectTypes Supported	Refer to section Supported Object Types (page 15)	R	R
Object_List	BACnetArray[N] of BACnetObjectIdentifier	BACnetARRAY[N]	R	R
Structured_Object_List	BACnetArray[N] of BACnetObjectIdentifier	-	O	-
Max_APDU_Length_Accepted	Unsigned	480	R	R
Segmentation_Supported	BACnetSegmentation	SEGMENTED-BOTH (0)	R	R
Max_Segments_accepted	Unsigned	16	O	R
VT_Classes_Supported	List of BACnetVTClass	-	O	-
Active_VT_Sessions	List of BACnetVTSession	-	O	-
Local_Date	Date	-	O	-
Local_Time	Time	-	O	-
UTC_Offset	INTEGER	-	O	-

Property Identifier	Property Datatype	Value	ASHRAE	Gateway
Daylight_Savings_Status	BOOLEAN	-	O	-
APDU_Segment_Timeout	Unsigned	3000	R	R
APDU_Timeout	Unsigned	3000	R	R
Number_of_APDU_Retries	Unsigned	3	R	R
List_Of_Session_Keys	List of BACnetSessionKey	-	O	-
Time_Synchronization_Recipients	List of BACnetRecipient	-	O	-
Max_Master	Unsigned	32	R	W
Max_Info_Frames	Unsigned	1	O	R
Device_Address_Binding	List of BACnetAddressBinding	NULL (empty)	R	R
Database_Revision	Unsigned	0	R	R
Configuration_Files	BACnetArray[N] of BACnetObjectIdentifier	-	O	-
Last_Restore_Time	BACnetTimeStamp	-	O	-
Backup_Failure_Timeout	Unsigned16	-	O	-
Active_COV_Subscriptions	List of BACnetCOVSubscription	List of BACnetCOVSubscription	O	R
Slave_Proxy_Enable	BACnetArray[N] of BOOLEAN	-	O	-
Manual_Slave_Address_Binding	List of BACnetAddressBinding	-	O	-
Auto_Slave_Discovery	BACnetArray[N] of BOOLEAN	-	O	-
Slave_Address_Binding	BACnetAddressBinding	-	O	-
Last_Restart_Reason	BACnetRestartReason	-	O	-
Time_Of_Device_Restart	BACnetTimeStamp	-	O	-
Restart_Notification_Recipients	List of BACnetRecipient	-	O	-
UTC_Time_Synchronization_Recipients	List of BACnetRecipient	-	O	-
Time_Synchronization_Interval	Unsigned	-	O	-
Align_Intervals	BOOLEAN	-	O	-
Interval_Offset	Unsigned	-	O	-
Profile_Name	CharacterString	-	O	-

7.3.2. OnOff_status (Binary Input Object Type)

It indicates if the indoor unit is turned on or off.

Property Identifier	Property Datatype	Value	ASHRAE	Gateway
Object_Identifier	BACnetObjectIdentifier	(Binary Input, 0)	R	R
Object_Name	CharacterString	OnOff_status	R	R
Object_Type	BACnetObjectType	BINARY_INPUT (3)	R	R
Present_Value	BACnetBinaryPV	INACTIVE (0) / ACTIVE (1)	R	R
Description	CharacterString	-	O	-
Device_Type	CharacterString	-	O	-
Status_Flags	BACnetStatusFlags	{FALSE, FALSE/TRUE, FALSE, FALSE}	R	R
Event_State	BACnetEventState	STATE_NORMAL (0)	R	R
Reliability	BACnetReliability	NO_FAULT_DETECTED (0), UNRELIABLE_OTHER (7)	O	R
Out_Of_Service	BOOLEAN	FALSE	R	R
Polarity	BACnetPolarity	NORMAL (0)	R	R
Inactive_Text	CharacterString	Off	O	R
Active_Text	CharacterString	On	O	R
Change_Of_State_Time	BACnetDatetime	-	O	-
Change_Of_State_Count	Unsigned	-	O	-
Time_Of_State_Count_Reset	BACnetDatetime	-	O	-
Elapsed_Active_Time	Unsigned	-	O	-
Time_Of_Active_Time_Reset	BACnetDatetime	-	O	-
Time_Delay	Unsigned	-	O	-
Notification_Class	Unsigned	-	O	-
Alarm_Value	BACnetBinaryPV	-	O	-
Event_Enable	BACnetEventTransitionBits	-	O	-
Acked_Transitions	BACnetEventTransitionBits	-	O	-
Notify_Type	BACnetNotifyType	-	O	-
Event_Time_Stamps	BACnetArray[N] of BACnetTimeStamp	-	O	-
Profile_Name	CharacterString	-	O	-

7.3.3. OnOff_command (Binary Output Object Type)

It turns the indoor unit on or off.

Property Identifier	Property Datatype	Value	ASHRAE	Gateway
Object_Identifier	BACnetObjectIdentifier	(Binary Output, 0)	R	R
Object_Name	CharacterString	OnOff_command	R	R
Object_Type	BACnetObjectType	BINARY_OUTPUT (4)	R	R
Present_Value	BACnetBinaryPV	INACTIVE (0) / ACTIVE (1)	R	W
Description	CharacterString	-	O	-
Device_Type	CharacterString	-	O	-
Status_Flags	BACnetStatusFlags	{FALSE, FALSE, FALSE, FALSE}	R	R
Event_State	BACnetEventState	STATE_NORMAL (0)	R	R
Reliability	BACnetReliability	NO_FAULT_DETECTED (0)	O	R
Out_Of_Service	BOOLEAN	FALSE	R	R
Polarity	BACnetPolarity	NORMAL (0)	R	R
Inactive_Text	CharacterString	Off	O	R
Active_Text	CharacterString	On	O	R
Change_Of_State_Time	BACnetDatetime	-	O	-
Change_Of_State_Count	Unsigned	-	O	-
Time_Of_State_Count_Reset	BACnetDatetime	-	O	-
Elapsed_Active_Time	Unsigned	-	O	-
Time_Of_Active_Time_Reset	BACnetDatetime	-	O	-
Minimum_Off_Time	Unsigned32	-	O	-
Minimum_On_Time	Unsigned32	-	O	-
Priority_Array	BACnetPriorityArray	BACnetPriorityArray	R	R
Relinquish_Default	BACnetBinaryPV	INACTIVE (0)	R	R
Time Delay	Unsigned	-	O	-
Notification_Class	Unsigned	-	O	-
Feedback_Value	BACnetBinaryPV	-	O	-
Event_Enable	BACnetEventTransitionBits	-	O	-
Acked_Transitions	BACnetEventTransitionBits	-	O	-
Notify_Type	BACnetNotifyType	-	O	-
Event_Time_Stamps	BACnetArray[N] of BACnetTimeStamp	-	O	-
Profile_Name	CharacterString	-	O	-

7.3.4. Mode_status (Multistate Input Object Type)

It indicates the indoor unit's current mode.

Property Identifier	Property Datatype	Value	ASHRAE	Gateway
Object_Identifier	BACnetObjectIdentifier	(Multistate Input, 0)	R	R
Object_Name	CharacterString	Mode_status	R	R
Object_Type	BACnetObjectType	MULTISTATE_INPUT (13)	R	R
Present_Value	Unsigned	1 .. 5	R	R
Description	CharacterString	-	O	-
Device_Type	CharacterString	-	O	-
Status_Flags	BACnetStatusFlags	{FALSE, FALSE/TRUE, FALSE, FALSE}	R	R
Event_State	BACnetEventState	STATE_NORMAL (0)	R	R
Reliability	BACnetReliability	NO_FAULT_DETECTED (0), UNRELIABLE_OTHER(7)	O	R
Out_Of_Service	BOOLEAN	FALSE	R	R
Number_Of_States	Unsigned	5	R	R
State_Text	BACnetArray[N] of CharacterString	Check the **Mode status table** below.	O	R
Time_Delay	Unsigned	-	O	-
Notification_Class	Unsigned	-	O	-
Alarm_Values	List of Unsigned	-	O	-
Fault_Values	List of Unsigned	-	O	-
Event_Enable	BACnetEventTransitionBits	-	O	-
Acked_Transitions	BACnetEventTransitionBits	-	O	-
Notify_Type	BACnetNotifyType	-	O	-
Event_Time_Stamps	BACnetArray[N] of BACnetTimeStamp	-	O	-
Profile_Name	CharacterString	-	O	-

Table 5. Mode status

Present_Value	State_Text
1	Heat
2	Cool
3	Fan
4	Dry
5	Auto

7.3.5. Mode_command (Multistate Output Object Type)

It sets the AC indoor unit's mode.

Property Identifier	Property Datatype	Value	ASHRAE	Gateway
Object_Identifier	BACnetObjectIdentifier	(Multistate Output,0)	R	R
Object_Name	CharacterString	Mode_command	R	R
Object_Type	BACnetObjectType	MULTISTATE_OUTPUT (14)	R	R
Present_Value	Unsigned	1 .. 5	R	W
Description	CharacterString	-	O	-
Device_Type	CharacterString	-	O	-
Status_Flags	BACnetStatusFlags	{FALSE, FALSE, FALSE, FALSE}	R	R
Event_State	BACnetEventState	STATE_NORMAL (0)	R	R
Reliability	BACnetReliability	NO_FAULT_DETECTED (0)	O	R
Out_Of_Service	BOOLEAN	FALSE	R	R
Number_Of_States	Unsigned	5	R	R
State_Text	BACnetArray[N] of CharacterString	Check the **Mode command table** below	O	R
Priority_Array	BACnetPriorityArray	BACnetPriorityArray	R	R
Relinquish_Default	Unsigned	1	R	R
Time_Delay	Unsigned	-	O	-
Notification_Class	Unsigned	-	O	-
Feedback_Value	Unsigned	-	O	-
Event_Enable	BACnetEventTransitionBits	-	O	-
Acked_Transitions	BACnetEventTransitionBits	-	O	-
Notify_Type	BACnetNotifyType	-	O	-
Event_Time_Stamps	BACnetArray[N] of BACnetTimeStamp	-	O	-
Profile_Name	CharacterString	-	O	-

Table 6. Mode command

Present_Value	State_Text
1	Heat
2	Cool
3	Fan
4	Dry
5	Auto

7.3.6. UserSetpoint_status (Analog Input Object Type)

It reports the value written in the Setpoint_command object.

NOTE
To know more, see Considerations on Temperature Signals (page 53).

Property Identifier	Property Datatype	Value	ASHRAE	Gateway
Object_Identifier	BACnetObjectIdentifier	(Analog Input, 17)	R	R
Object_Name	CharacterString	UserSetPoint_status	R	R
Object_Type	BACnetObjectType	ANALOG_INPUT (0)	R	R
Present_Value	REAL	16 .. 31.5°C / 61 .. 88.7°F	R	R
Description	CharacterString	-	O	-
Device_Type	CharacterString	-	O	-
Status_Flags	BACnetStatusFlags	{FALSE, FALSE, FALSE, FALSE}	R	R
Event_State	BACnetEventState	STATE_NORMAL (0)	R	R
Reliability	BACnetReliability	NO_FAULT_DETECTED (0) UNRELIABLE_OTHER (7)	O	R
Out_Of_Service	BOOLEAN	FALSE	R	R
Update_Interval	Unsigned	300	O	-
Units	BACnetEngineeringUnits	Celsius degrees (62) Farenheit degrees (64)	R	R
Min_Pres_Value	REAL	16°C / 61°F	O	-
Max_Pres_Value	REAL	31.5°C / 88.7°F	O	-
Resolution	REAL	-	O	-
COV_Increment	REAL	0	O	W
Time_Delay	Unsigned	-	O	-
Notification_Class	Unsigned	-	O	-
High_Limit	REAL	-	O	-
Low_Limit	REAL	-	O	-
Deadband	REAL	-	O	-
Limit_Enable	BACnetLimitEnable	-	O	-
Event_Enable	BACnetEventTransitionBits	-	O	-
Acked_Transitions	BACnetEventTransitionBits	-	O	-
Notify_Type	BACnetNotifyType	-	O	-
Event_Time_Stamps	BACnetArray[N] of BACnetTimeStamp	-	O	-
Profile_Name	CharacterString	-	O	-

NOTE
You can set the temperature scale in Celsius or Fahrenheit scale via DIP switches. More information in DIP switches (page 10).

7.3.7. Setpoint_status (Analog Input Object Type)

It reports the temperature setpoint requested to the indoor unit.

NOTE
To know more, see Considerations on Temperature Signals (page 53).

Property Identifier	Property Datatype	Value	ASHRAE	Gateway
Object_Identifier	BACnetObjectIdentifier	(Analog Input, 0)	R	R
Object_Name	CharacterString	SetPoint_status	R	R
Object_Type	BACnetObjectType	ANALOG_INPUT (0)	R	R
Present_Value	REAL	16 .. 31.5°C / 61 .. 88.7°F	R	R
Description	CharacterString	-	O	-
Device_Type	CharacterString	-	O	-
Status_Flags	BACnetStatusFlags	{FALSE, FALSE/TRUE, FALSE, FALSE}	R	R
Event_State	BACnetEventState	STATE_NORMAL (0)	R	R
Reliability	BACnetReliability	NO_FAULT_DETECTED (0), UNRELIABLE_OTHER (7)	O	R
Out_Of_Service	BOOLEAN	FALSE	R	R
Update_Interval	Unsigned	-	O	-
Units	BACnetEngineeringUnits	Celsius degrees (62) Fahrenheit degrees (64)	R	R
Min_Pres_Value	REAL		O	R
Max_Pres_Value	REAL	31.5°C / 88.7°F	O	R
Resolution	REAL	-	O	-
COV_Increment	REAL	0	O	W
Time_Delay	Unsigned	-	O	-
Notification_Class	Unsigned	-	O	-
High_Limit	REAL	-	O	-
Low_Limit	REAL	-	O	-
Deadband	REAL	-	O	-
Limit_Enable	BACnetLimitEnable	-	O	-
Event_Enable	BACnetEventTransitionBits	-	O	-
Acked_Transitions	BACnetEventTransitionBits	-	O	-
Notify_Type	BACnetNotifyType	-	O	-
Event_Time_Stamps	BACnetArray[N] of BACnetTimeStamp	-	O	-
Profile_Name	CharacterString	-	O	-

NOTE
You can set the temperature scale in Celsius or Fahrenheit via the DIP switches. More information in DIP switches (page 10).

7.3.8. Setpoint_command (Analog Output Object Type)

It is used to request a temperature setpoint from the BACnet side.

NOTE
To know more, see Considerations on Temperature Signals (page 53).

Property Identifier	Property Datatype	Value	ASHRAE	Gateway
Object_Identifier	BACnetObjectIdentifier	(Analog Output, 0)	R	R
Object_Name	CharacterString	SetPoint_command	R	R
Object_Type	BACnetObjectType	ANALOG_OUTPUT (1)	R	R
Present_Value	REAL	16 .. 31.5°C / 61 .. 88.7°F	W	W
Status_Flags	BACnetStatusFlags	{FALSE, FALSE, FALSE, FALSE}	R	R
Event_State	BACnetEventState	STATE_NORMAL (0)	R	R
Reliability	BACnetReliability	NO_FAULT_DETECTED (0)	O	R
Out_Of_Service	BOOLEAN	FALSE	R	R
Update_Interval	Unsigned	-	O	-
Units	BACnetEngineeringUnits	Celsius degrees (62) Fahrenheit degrees (64)	R	R
Min_Pres_Value	REAL	16°C / 61°F	O	R
Max_Pres_Value	REAL	31.5°C / 88.7°F	O	R
Resolution	R	-	O	-
COV_Increment	REAL	0	O	W
Priority_Array	BACnetPriorityArray	BACnetPriorityArray	R	R
Relinquish_Default	Unsigned	22	R	R
Time_Delay	Unsigned	-	O	-
Notification_Class	Unsigned	-	O	-
High_Limit	REAL	-	O	-
Low_Limit	REAL	-	O	-
Deadband	REAL	-	O	-
Limit_Enable	BACnetLimitEnable	-	O	-
Event_Enable	BACnetEventTransitionBits	-	O	-
Acked_Transitions	BACnetEventTransitionBits	-	O	-
Notify_Type	BACnetNotifyType	-	O	-
Event_Time_Stamps	BACnetArray[N] of BACnetTimeStamp	-	O	-
Profile_Name	CharacterString	-	O	-

NOTE
You can set the temperature scale in Celsius or Fahrenheit via the DIP switches. More information in DIP switches (page 10).

7.3.9. FanSpeed_status (Multistate Input Object Type)

It indicates the indoor unit's fan speed.

Property Identifier	Property Datatype	Value	ASHRAE	Gateway
Object_Identifier	BACnetObjectIdentifier	(Multistate Input, 1)	R	R
Object_Name	CharacterString	FanSpeed_status	R	R
Object_Type	BACnetObjectType	MULTISTATE_INPUT (13)	R	R
Present_Value	Unsigned	1 .. 6	R	R
Description	CharacterString	-	O	-
Device_Type	CharacterString	-	O	-
Status_Flags	BACnetStatusFlags	{FALSE, FALSE/TRUE, FALSE, FALSE}	R	R
Event_State	BACnetEventState	STATE_NORMAL (0)	R	R
Reliability	BACnetReliability	NO_FAULT_DETECTED (0), UNRELIABLE_OTHER (7)	O	R
Out_Of_Service	BOOLEAN	FALSE/TRUE	R	R
Number_Of_States	Unsigned	6	R	R
State_Text	BACnetArray[N] of CharacterString	Check the **Fan speed status table** below.	O	R
Time_Delay	Unsigned	-	O	-
Notification_Class	Unsigned	-	O	-
Alarm_Values	List of Unsigned	-	O	-
Fault_Values	List of Unsigned	-	O	-
Event_Enable	BACnetEventTransitionBits	-	O	-
Acked_Transitions	BACnetEventTransitionBits	-	O	-
Notify_Type	BACnetNotifyType	-	O	-
Event_Time_Stamps	BACnetArray[N] of BACnetTimeStamp	-	O	-
Profile_Name	CharacterString	-	O	-

Table 7. Fan speed status

Present_Value	State_Text
1	Auto
2	Fan Speed 1 (Silent)[1]
3	Fan Speed 2
4	Fan Speed 3
5	Fan Speed 4
6	Fan Speed 5

[1]The lowest fan speed in some Mitsubishi Electric indoor units is Fan speed 2.

7.3.10. FanSpeed_command (Multistate Output Object Type)

It sets the indoor unit's fan speed.

Property Identifier	Property Datatype	Value	ASHRAE	Gateway
Object_Identifier	BACnetObjectIdentifier	(Multistate Output, 1)	R	R
Object_Name	CharacterString	FanSpeed_command	R	R
Object_Type	BACnetObjectType	MULTISTATE_OUTPUT (14)	R	R
Present_Value	Unsigned	1 .. 6	R	W
Description	CharacterString	-	O	-
Device_Type	CharacterString	-	O	-
Status_Flags	BACnetStatusFlags	{FALSE, FALSE, FALSE, FALSE}	R	R
Event_State	BACnetEventState	STATE_NORMAL (0)	R	R
Reliability	BACnetReliability	NO_FAULT_DETECTED (0)	O	R
Out_Of_Service	BOOLEAN	FALSE	R	R
Number_Of_States	Unsigned	6	R	R
State_Text	BACnetArray[N] of CharacterString	Check the **Fan speed command table** below	O	R
Priority_Array	BACnetPriorityArray	BACnetPriorityArray	R	R
Relinquish_Default	Unsigned	1	R	R
Time_Delay	Unsigned	-	O	-
Notification_Class	Unsigned	-	O	-
Feedback_Value	Unsigned	-	O	-
Event_Enable	BACnetEventTransitionBits	-	O	-
Acked_Transitions	BACnetEventTransitionBits	-	O	-
Notify_Type	BACnetNotifyType	-	O	-
Event_Time_Stamps	BACnetArray[N] of BACnetTimeStamp	-	O	-
Profile_Name	CharacterString	-	O	-

Table 8. Fan speed command

Present_Value	State_Text
1	Auto
2	Fan Speed 1(Silent)[1]
3	Fan Speed 2
4	Fan Speed 3
5	Fan Speed 4
6	Fan Speed 5

[1]The lowest fan speed in some Mitsubishi Electric indoor units is Fan speed 2.

7.3.11. AirDirectionUD_status (Multistate Input Object Type)

It indicates the indoor unit's vertical air direction (up-down) status.

Property Identifier	Property Datatype	Value	ASHRAE	Gateway
Object_Identifier	BACnetObjectIdentifier	(Multistate Input, 2)	R	R
Object_Name	CharacterString	AirDirectionUD_status	R	R
Object_Type	BACnetObjectType	MULTISTATE_INPUT(13)	R	R
Present_Value	Unsigned	1 .. 7	R	R
Description	CharacterString	-	O	-
Device_Type	CharacterString	-	O	-
Status_Flags	BACnetStatusFlags	{FALSE, FALSE/TRUE, FALSE, FALSE}	R	R
Event_State	BACnetEventState	STATE_NORMAL (0)	R	R
Reliability	BACnetReliability	NO_FAULT_DETECTED (0), UNRELIABLE_OTHER (7)	O	R
Out_Of_Service	BOOLEAN	FALSE/TRUE	R	R
Number_Of_States	Unsigned	7	R	R
State_Text	BACnetArray[N] of CharacterString	Check the **Air direction status table** below.	O	R
Time_Delay	Unsigned	-	O	-
Notification_Class	Unsigned	-	O	-
Alarm_Values	List of Unsigned	-	O	-
Fault_Values	List of Unsigned	-	O	-
Event_Enable	BACnetEventTransitionBits	-	O	-
Acked_Transitions	BACnetEventTransitionBits	-	O	-
Notify_Type	BACnetNotifyType	-	O	-
Event_Time_Stamps	BACnetArray[N] of BACnetTimeStamp	-	O	-
Profile_Name	CharacterString	-	O	-

Table 9. Air direction up-down status

Present_Value	State_Text
1	Auto
2	Pos1
3	Pos2
4	Pos3
5	Pos4
6	Pos5
7	Swing

7.3.12. AirDirectionUD_command (Multistate Output Object Type)

It sets the indoor unit's vertical air direction (up-down).

Property Identifier	Property Datatype	Value	ASHRAE	Gateway
Object_Identifier	BACnetObjectIdentifier	(Multistate Output, 2)	R	R
Object_Name	CharacterString	AirDirectionUD_command	R	R
Object_Type	BACnetObjectType	MULTISTATE_OUTPUT (14)	R	R
Present_Value	Unsigned	1 .. 7	R	W
Description	CharacterString	-	O	-
Device_Type	CharacterString	-	O	-
Status_Flags	BACnetStatusFlags	{FALSE, FALSE, FALSE, FALSE}	R	R
Event_State	BACnetEventState	STATE_NORMAL (0)	R	R
Reliability	BACnetReliability	NO_FAULT_DETECTED (0)	O	R
Out_Of_Service	BOOLEAN	FALSE	R	R
Number_Of_States	Unsigned	7	R	R
State_Text	BACnetArray[N] of CharacterString	Check the **Air direction command table** below	O	R
Priority_Array	BACnetPriorityArray	-	R	R
Relinquish_Default	Unsigned	-	R	R
Time_Delay	Unsigned	-	O	-
Notification_Class	Unsigned	-	O	-
Feedback_Value	Unsigned	-	O	-
Event_Enable	BACnetEventTransitionBits	-	O	-
Acked_Transitions	BACnetEventTransitionBits	-	O	-
Notify_Type	BACnetNotifyType	-	O	-
Event_Time_Stamps	BACnetArray[N] of BACnetTimeStamp	-	O	-
Profile_Name	CharacterString	-	O	-

Table 10. Air direction up-down command

Present_Value	State_Text
1	Auto
2	Pos1
3	Pos2
4	Pos3
5	Pos4
6	Pos5
7	Swing

7.3.13. AirDirectionLR_status (Multistate Input Object Type)

It indicates the current indoor unit's horizontal air direction (left-right) status.

Property Identifier	Property Datatype	Value	ASHRAE	Gateway
Object_Identifier	BACnetObjectIdentifier	(Multi-state Input, 3)	R	R
Object_Name	CharacterString	AirDirectionLR_status	R	R
Object_Type	BACnetObjectType	MULTISTATE_INPUT(13)	R	R
Present_Value	Unsigned	1 .. 7	R	R
Description	CharacterString	-	O	-
Device_Type	CharacterString	-	O	-
Status_Flags	BACnetStatusFlags	{FALSE, FALSE/TRUE, FALSE, FALSE}	R	R
Event_State	BACnetEventState	STATE_NORMAL (0)	R	R
Reliability	BACnetReliability	NO_FAULT_DETECTED (0), UNRELIABLE_OTHER (7)	O	R
Out_Of_Service	BOOLEAN	FALSE/TRUE	R	R
Number_Of_States	Unsigned	7	R	R
State_Text	BACnetArray[N] of CharacterString	Check the **Air direction status table** below.	O	R
Time_Delay	Unsigned	-	O	-
Notification_Class	Unsigned	-	O	-
Alarm_Values	List of Unsigned	-	O	-
Fault_Values	List of Unsigned	-	O	-
Event_Enable	BACnetEventTransitionBits	-	O	-
Acked_Transitions	BACnetEventTransitionBits	-	O	-
Notify_Type	BACnetNotifyType	-	O	-
Event_Time_Stamps	BACnetArray[N] of BACnetTimeStamp	-	O	-
Profile_Name	CharacterString	-	O	-

Table 11. Air direction left-right status

Present_Value	State_Text
1	Pos1
2	Pos2
3	Pos3
4	Pos4
5	Pos5
6	Pos6 (Wide)
7	Swing

7.3.14. AirDirectionLR_command (Multistate Output Object Type)

It allows control over the air direction (left-right) for the indoor unit.

Property Identifier	Property Datatype	Value	ASHRAE	Gateway
Object_Identifier	BACnetObjectIdentifier	(Multi-state Output, 3)	R	R
Object_Name	CharacterString	AirDirectionLR_command	R	R
Object_Type	BACnetObjectType	MULTISTATE_OUTPUT (14)	R	R
Present_Value	Unsigned	1 .. 6	W	W
Description	CharacterString	-	O	-
Device_Type	CharacterString	-	O	-
Status_Flags	BACnetStatusFlags	{FALSE, FALSE, FALSE, FALSE}	R	R
Event_State	BACnetEventState	STATE_NORMAL (0)	R	R
Reliability	BACnetReliability	NO_FAULT_DETECTED (0)	O	R
Out_Of_Service	BOOLEAN	FALSE	R	R
Number_Of_States	Unsigned	6	R	R
State_Text	BACnetArray[N] of CharacterString	Check the **Air direction command setting table** below	O	R
Priority_Array	BACnetPriorityArray	-	R	R
Relinquish_Default	Unsigned	-	R	R
Time_Delay	Unsigned	-	O	-
Notification_Class	Unsigned	-	O	-
Feedback_Value	Unsigned	-	O	-
Event_Enable	BACnetEventTransitionBits	-	O	-
Acked_Transitions	BACnetEventTransitionBits	-	O	-
Notify_Type	BACnetNotifyType	-	O	-
Event_Time_Stamps	BACnetArray[N] of BACnetTimeStamp	-	O	-
Profile_Name	CharacterString	-	O	-

Table 12. Air direction left-right command

Present_Value	Content displayed in State_Text
1	Pos1
2	Pos2
3	Pos3
4	Pos4
5	Pos5
6	Pos6 (Wide)
7	Swing

7.3.15. RoomTemperature_status (Analog Input Object Type)

It reports the ambient temperature perceived by the sensor from the AC system side.

NOTE
To know more, see Considerations on Temperature Signals (page 53).

Property Identifier	Property Datatype	Value	ASHRAE	Gateway
Object_Identifier	BACnetObjectIdentifier	(Analog Input, 1)	R	R
Object_Name	CharacterString	RoomTemperature_status	R	R
Object_Type	BACnetObjectType	ANALOG_INPUT (0)	R	R
Present_Value	REAL	10 .. 38°C / 50 .. 100°F	R	R
Description	CharacterString	-	O	-
Device_Type	CharacterString	-	O	-
Status_Flags	BACnetStatusFlags	{FALSE, FALSE/TRUE, FALSE, FALSE}	R	R
Event_State	BACnetEventState	STATE_NORMAL (0)	R	R
Reliability	BACnetReliability	NO_FAULT_DETECTED (0), UNRELIABLE_OTHER (7)	O	R
Out_Of_Service	BOOLEAN	FALSE	R	R
Update_Interval	Unsigned	-	O	-
Units	BACnetEngineeringUnits	Celsius degrees (62) Fahrenheit degrees (64)	R	R
Min_Pres_Value	REAL	10°C / 50°F	O	-
Max_Pres_Value	REAL	38°C / 100°F	O	-
Resolution	REAL	-	O	-
COV_Increment	REAL	0	O	W
Time_Delay	Unsigned	-	O	-
Notification_Class	Unsigned	-	O	-
High_Limit	REAL	-	O	-
Low_Limit	REAL	-	O	-
Deadband	REAL	-	O	-
Limit_Enable	BACnetLimitEnable	-	O	-
Event_Enable	BACnetEventTransitionBits	-	O	-
Acked_Transitions	BACnetEventTransitionBits	-	O	-
Notify_Type	BACnetNotifyType	-	O	-
Event_Time_Stamps	BACnetArray[N] of BACnetTimeStamp	-	O	-
Profile_Name	CharacterString	-	O	-

NOTE
You can set the temperature scale in Celsius or Fahrenheit scale via DIP switches. More information in DIP switches (page 10).

7.3.16. RoomTemperature_command (Analog Output Object Type)

It is used to write the ambient temperature perceived by a sensor from the BACnet side.

NOTE
To know more, see Considerations on Temperature Signals (page 53).

Property Identifier	Property Datatype	Value	ASHRAE	Gateway
Object_Identifier	BACnetObjectIdentifier	(Analog Output, 1)	R	R
Object_Name	CharacterString	RoomTemperature_command	R	R
Object_Type	BACnetObjectType	ANALOG_OUTPUT (1)	R	R
Present_Value	REAL	10 .. 38°C / 50 .. 100°F	R	W
Description	CharacterString	-	O	-
Device_Type	CharacterString	-	O	-
Status_Flags	BACnetStatusFlags	{FALSE, FALSE, FALSE, FALSE}	R	R
Event_State	BACnetEventState	STATE_NORMAL (0)	R	R
Reliability	BACnetReliability	NO_FAULT_DETECTED (0)	O	R
Out_Of_Service	BOOLEAN	FALSE	R	R
Update_Interval	Unsigned	-	O	-
Units	BACnetEngineeringUnits	Celsius degrees (62) Fahrenheit degrees (64)	R	R
Min_Pres_Value	REAL	10°C / 50°F	O	-
Max_Pres_Value	REAL	38°C / 100°F	O	-
Resolution	REAL	-	O	-
COV_Increment	REAL	0	O	W
Priority_Array	BACnetPriorityArray	BACnetPriorityArray	R	R
Relinquish_Default	Unsigned	-32768	R	W
Time_Delay	Unsigned	-	O	-
Notification_Class	Unsigned	-	O	-
High_Limit	REAL	-	O	-
Low_Limit	REAL	-	O	-
Deadband	REAL	-	O	-
Limit_Enable	BACnetLimitEnable	-	O	-
Event_Enable	BACnetEventTransitionBits	-	O	-
Acked_Transitions	BACnetEventTransitionBits	-	O	-
Notify_Type	BACnetNotifyType	-	O	-
Event_Time_Stamps	BACnetArray[N] of BACnetTimeStamp	-	O	-
Profile_Name	CharacterString	-	O	-

NOTE
You can set the temperature scale in Celsius or Fahrenheit scale via DIP switches. More information in DIP switches (page 10).

7.3.17. ErrorCode (Analog Input Object Type)

It indicates the AC system's current error.

Property Identifier	Property Datatype	Value	ASHRAE	Gateway
Object_Identifier	BACnetObjectIdentifier	(Analog Input, 2)	R	R
Object_Name	CharacterString	ErrorCode	R	R
Object_Type	BACnetObjectType	ANALOG_INPUT (0)	R	R
Present_Value	REAL	-1 .. 6846	R	R
Description	CharacterString	-	O	-
Device_Type	CharacterString	-	O	-
Status_Flags	BACnetStatusFlags	{FALSE, FALSE, FALSE, FALSE}	R	R
Event_State	BACnetEventState	STATE_NORMAL (0)	R	R
Reliability	BACnetReliability	NO_FAULT_DETECTED (0)	O	R
Out_Of_Service	BOOLEAN	FALSE	R	R
Update_Interval	Unsigned	300	O	-
Units	BACnetEngineeringUnits	NO_UNITS (95)	R	R
Min_Pres_Value	REAL	-1	O	-
Max_Pres_Value	REAL	6846	O	-
Resolution	REAL	-	O	-
COV_Increment	REAL	0	O	W
Time_Delay	Unsigned	-	O	-
Notification_Class	Unsigned	-	O	-
High_Limit	REAL	-	O	-
Low_Limit	REAL	-	O	-
Deadband	REAL	-	O	-
Limit_Enable	BACnetLimitEnable	-	O	-
Event_Enable	BACnetEventTransitionBits	-	O	-
Acked_Transitions	BACnetEventTransitionBits	-	O	-
Notify_Type	BACnetNotifyType	-	O	-
Event_Time_Stamps	BACnetArray[N] of BACnetTimeStamp	-	O	-
Profile_Name	CharacterString	-	O	-

NOTICE

For more information on each error code, see Error Codes.

7.3.18. ErrorCodeM (Multistate Input Object Type)

It indicates the AC system's current error.

Property Identifier	Property Datatype	Value	ASHRAE	Gateway
Object_Identifier	BACnetObjectIdentifier	(Multistate Input, 4)	R	R
Object_Name	CharacterString	ErrorCodeM	R	R
Object_Type	BACnetObjectType	MULTISTATE_INPUT(13)	R	R
Present_Value	Unsigned	1 .. 48	R	R
Description	CharacterString	-	O	-
Device_Type	CharacterString	-	O	-
Status_Flags	BACnetStatusFlags	{FALSE, FALSE, FALSE, FALSE}	R	R
Event_State	BACnetEventState	STATE_NORMAL (0)	R	R
Reliability	BACnetReliability	NO_FAULT_DETECTED (0)	O	R
Out_Of_Service	BOOLEAN	FALSE	R	R
Number_Of_States	Unsigned	48	R	R
State_Text	BACnetArray[N] of CharacterString	Check the **Error codes table** below	O	R
Time_Delay	Unsigned	-	O	-
Notification_Class	Unsigned	-	O	-
Alarm_Values	List of Unsigned	-	O	-
Fault_Values	List of Unsigned	-	O	-
Event_Enable	BACnetEventTransitionBits	-	O	-
Acked_Transitions	BACnetEventTransitionBits	-	O	-
Notify_Type	BACnetNotifyType	-	O	-
Event_Time_Stamps	BACnetArray[N] of BACnetTimeStamp	-	O	-
Profile_Name	CharacterString	-	O	-

Table 13. Error Codes

Present_Value	State_Text	Present_Value	State_Text	Present_Value	State_Text
1	-	17	4101	33	5202
2	CommError	18	4102	34	5300
3	1102	19	4103	35	6600
4	1108	20	4108	36	6602
5	1110	21	4118	37	6603
6	1300	22	4124	38	6606
7	1302	23	4210	39	6607
8	1503	24	4220	40	6608
9	1504	25	4230	41	6831
10	1509	26	5101	42	6832
11	1520	27	5102	43	6840
12	2500	28	5104	44	6841
13	2502	29	5105	45	6844
14	2503	30	5106	46	6845
15	4030	31	5107	47	6846
16	4100	32	5110	48	UNKNOWN

7.3.19. ErrorActive (Binary Input Object Type)

It indicates if there is an active error in the AC system.

Property Identifier	Property Datatype	Value	ASHRAE	Gateway
Object_Identifier	BACnetObjectIdentifier	(Binary Input, 1)	R	R
Object_Name	CharacterString	ErrorActive	R	R
Object_Type	BACnetObjectType	BINARY_INPUT (3)	R	R
Present_Value	BACnetBinaryPV	INACTIVE (0) / ACTIVE (1)	R	R
Description	CharacterString	-	O	-
Device_Type	CharacterString	-	O	-
Status_Flags	BACnetStatusFlags	{FALSE, FALSE, FALSE, FALSE}	R	R
Event_State	BACnetEventState	STATE_NORMAL (0)	R	R
Reliability	BACnetReliability	NO_FAULT_DETECTED (0)	O	R
Out_Of_Service	BOOLEAN	FALSE	R	R
Polarity	BACnetPolarity	NORMAL (0)	R	R
Inactive_Text	CharacterString	No	O	R
Active_Text	CharacterString	Error	O	R
Change_Of_State_Time	BACnetDatetime	-	O	-
Change_Of_State_Count	Unsigned	-	O	-
Time_Of_State_Count_Reset	BACnetDatetime	-	O	-
Elapsed_Active_Time	Unsigned	-	O	-
Time_Of_Active_Time_Reset	BACnetDatetime	-	O	-
Time_Delay	Unsigned	-	O	-
Notification_Class	Unsigned	-	O	-
Alarm_Value	BACnetBinaryPV	-	O	-
Event_Enable	BACnetEventTransitionBits	-	O	-
Acked_Transitions	BACnetEventTransitionBits	-	O	-
Notify_Type	BACnetNotifyType	-	O	-
Event_Time_Stamps	BACnetArray[N] of BACnetTimeStamp	-	O	-
Profile_Name	CharacterString	-	O	-

7.3.20. OnTimeCounter (Analog Value Object Type)

It indicates the AC unit running time.

Property Identifier	Property Datatype	Value	ASHRAE	Gateway
Object_Identifier	BACnetObjectIdentifier	(Analog Value, 0)	R	R
Object_Name	CharacterString	OnTimeCounter	R	R
Object_Type	BACnetObjectType	ANALOG_VALUE (2)	R	R
Present_Value	REAL	0 .. 65535	R	R/W
Description	CharacterString	-	O	-
Status_Flags	BACnetStatusFlags	{FALSE, FALSE, FALSE, FALSE}	R	R
Event_State	BACnetEventState	STATE_NORMAL (0)	R	R
Reliability	BACnetReliability	NO_FAULT_DETECTED (0)	O	R
Out_Of_Service	BOOLEAN	FALSE	R	R
Update_Interval	Unsigned	-	O	-
Units	BACnetEngineeringUnits	Hours (71)	R	R
Min_Pres_Value	REAL	0	O	-
Max_Pres_Value	REAL	65535	O	-
Resolution	REAL	-	O	-
COV_Increment	REAL	0	O	W
Time_Delay	Unsigned	-	O	-
Notification_Class	Unsigned	-	O	-
High_Limit	REAL	-	O	-
Low_Limit	REAL	-	O	-
Deadband	REAL	-	O	-
Limit_Enable	BACnetLimitEnable	-	O	-
Event_Enable	BACnetEventTransitionBits	-	O	-
Acked_Transitions	BACnetEventTransitionBits	-	O	-
Notify_Type	BACnetNotifyType	-	O	-
Event_Time_Stamps	BACnetArray[N] of BACnetTimeStamp	-	O	-
Profile_Name	CharacterString	-	O	-

7.3.21. VirtualTemperatureActive (Binary Input Object Type)

It indicates if the Virtual Temperature function is active or inactive.

NOTE

The Virtual Temperature function allows the gateway to set the reference temperature using the value reported by a sensor connected to the BMS.

For more information, see Virtual Temperature Function (page 52).

Property Identifier	Property Datatype	Value	ASHRAE	Gateway
Object_Identifier	BACnetObjectIdentifier	(Binary Input, 14)	R	R
Object_Name	CharacterString	VirtualTempActive	R	R
Object_Type	BACnetObjectType	BINARY_INPUT (3)	R	R
Present_Value	BACnetBinaryPV	INACTIVE (0) / ACTIVE (1)	R	R
Description	CharacterString	-	O	-
Device_Type	CharacterString	-	O	-
Status_Flags	BACnetStatusFlags	{FALSE, FALSE, FALSE, FALSE}	R	R
Event_State	BACnetEventState	STATE_NORMAL (0)	R	R
Reliability	BACnetReliability	NO_FAULT_DETECTED (0) UNRELIABLE_OTHER (7)	O	R
Out_Of_Service	BOOLEAN	FALSE	R	R
Polarity	BACnetPolarity	NORMAL (0)	R	R
Inactive_Text	CharacterString	No	O	R
Active_Text	CharacterString	Yes	O	R
Change_Of_State_Time	BACnetDatetime	-	O	-
Change_Of_State_Count	Unsigned	-	O	-
Time_Of_State_Count_Reset	BACnetDatetime	-	O	-
Elapsed_Active_Time	Unsigned	-	O	-
Time_Of_Active_Time_Reset	BACnetDatetime	-	O	-
Time_Delay	Unsigned	-	O	-
Notification_Class	Unsigned	-	O	-
Alarm_Value	BACnetBinaryPV	-	O	-
Event_Enable	BACnetEventTransitionBits	-	O	-
Acked_Transitions	BACnetEventTransitionBits	-	O	-
Notify_Type	BACnetNotifyType	-	O	-
Event_Time_Stamps	BACnetArray[N] of BACnetTimeStamp	-	O	-
Profile_Name	CharacterString	-	O	-

7.3.22. Occupancy (Multistate Value Object Type)

It indicates the current occupancy status.

NOTE

To know more, see Occupancy Function (page 50).

Property Identifier	Property Datatype	Value	ASHRAE	Gateway
Object_Identifier	BACnetObjectIdentifier	(Multistate Value, 0)	R	R
Object_Name	CharacterString	Occupancy	R	R
Object_Type	BACnetObjectType	MULTISTATE_VALUE (19)	R	R
Present_Value	BACnetBinaryPV	1 .. 3	R	R/W
Description	CharacterString	-	O	-
Status_Flags	BACnetStatusFlags	{FALSE, FALSE, FALSE, FALSE}	R	R
Event_State	BACnetEventState	STATE_NORMAL (0)	R	R
Reliability	BACnetReliability	NO_FAULT_DETECTED (0)	O	R
Out_Of_Service	BOOLEAN	FALSE	R	R
Number_Of_States	Unsigned	3	R	R
State_Text	BACnetArray[N] of CharacterString	Check the **Occupancy values table** below	O	R
Priority_Array	BACnetPriorityArray	-	R	-
Relinquish_Default	Unsigned	-	R	-
Time_Delay	Unsigned	-	O	-
Notification_Class	Unsigned	-	O	-
Alarm_Value	Unsigned	-	O	-
Event_Enable	BACnetEventTransitionBits	-	O	-
Acked_Transitions	BACnetEventTransitionBits	-	O	-
Notify_Type	BACnetNotifyType	-	O	-
Event_Time_Stamps	BACnetArray[N] of BACnetTimeStamp	-	O	-
Profile_Name	CharacterString	-	O	-

Table 14. Occupancy values

Present_Value	State_Text
1	Occupied
2	Unoccupied
3	Disabled

7.3.23. OccupiedCoolSetPoint (Analog Value Object Type)

It indicates the temperature setpoint when the room is occupied, the cool mode is selected, and the occupancy object is enabled.

NOTE
To know more, see Occupancy Function (page 50).

Property Identifier	Property Datatype	Value	ASHRAE	Gateway
Object_Identifier	BACnetObjectIdentifier	(Analog Value, 1)	R	R
Object_Name	CharacterString	OccupiedCoolSetPoint	R	R
Object_Type	BACnetObjectType	ANALOG_VALUE (2)	R	R
Present_Value	REAL	0 .. 65535	R	R/W
Description	CharacterString	-	O	-
Status_Flags	BACnetStatusFlags	{FALSE, FALSE, FALSE, FALSE}	R	R
Event_State	BACnetEventState	STATE_NORMAL (0)	R	R
Reliability	BACnetReliability	NO_FAULT_DETECTED (0)	O	R
Out_Of_Service	BOOLEAN	FALSE	R	R
Update_Interval	Unsigned	-	O	-
Units	BACnetEngineeringUnits	Degrees Celsius (62) Degrees Fahrenheit (64)	R	R
Min_Pres_Value	REAL	0	O	-
Max_Pres_Value	REAL	65535	O	-
Resolution	REAL	-	O	-
COV_Increment	REAL	0	O	W
Time_Delay	Unsigned	-	O	-
Notification_Class	Unsigned	-	O	-
High_Limit	REAL	-	O	-
Low_Limit	REAL	-	O	-
Deadband	REAL	-	O	-
Limit_Enable	BACnetLimitEnable	-	O	-
Event_Enable	BACnetEventTransitionBits	-	O	-
Acked_Transitions	BACnetEventTransitionBits	-	O	-
Notify_Type	BACnetNotifyType	-	O	-
Event_Time_Stamps	BACnetArray[N] of BACnetTimeStamp	-	O	-
Profile_Name	CharacterString	-	O	-

NOTE
You can set the temperature scale in Celsius or Fahrenheit scale via DIP switches. More information in DIP switches (page 10).

7.3.24. OccupiedHeatSetPoint (Analog Value Object Type)

It indicates the temperature setpoint when the room is occupied, the heat mode is selected, and the occupancy object is enabled.

NOTE
To know more, see Occupancy Function (page 50).

Property Identifier	Property Datatype	Value	ASHRAE	Gateway
Object_Identifier	BACnetObjectIdentifier	(Analog Value, 2)	R	R
Object_Name	CharacterString	OccupiedHeatSetPoint	R	R
Object_Type	BACnetObjectType	ANALOG_VALUE (2)	R	R
Present_Value	REAL	0 .. 65535	R	R/W
Description	CharacterString	-	O	-
Status_Flags	BACnetStatusFlags	{FALSE, FALSE, FALSE, FALSE}	R	R
Event_State	BACnetEventState	STATE_NORMAL (0)	R	R
Reliability	BACnetReliability	NO_FAULT_DETECTED (0)	O	R
Out_Of_Service	BOOLEAN	FALSE	R	R
Update_Interval	Unsigned	-	O	-
Units	BACnetEngineeringUnits	Degrees Celsius (62) Degrees Fahrenheit (64)	R	R
Min_Pres_Value	REAL	0	O	-
Max_Pres_Value	REAL	65535	O	-
Resolution	REAL	-	O	-
COV_Increment	REAL	0	O	W
Time_Delay	Unsigned	-	O	-
Notification_Class	Unsigned	-	O	-
High_Limit	REAL	-	O	-
Low_Limit	REAL	-	O	-
Deadband	REAL	-	O	-
Limit_Enable	BACnetLimitEnable	-	O	-
Event_Enable	BACnetEventTransitionBits	-	O	-
Acked_Transitions	BACnetEventTransitionBits	-	O	-
Notify_Type	BACnetNotifyType	-	O	-
Event_Time_Stamps	BACnetArray[N] of BACnetTimeStamp	-	O	-
Profile_Name	CharacterString	-	O	-

NOTE
You can set the temperature scale in Celsius or Fahrenheit scale via DIP switches. More information in DIP switches (page 10).

7.3.25. UnoccupiedCoolSetPoint (Analog Value Object Type)

It indicates the setpoint when the room is unoccupied, the cool mode is selected, and the occupancy object is enabled.

NOTE
To know more, see Occupancy Function (page 50).

Property Identifier	Property Datatype	Value	ASHRAE	Gateway
Object_Identifier	BACnetObjectIdentifier	(Analog Value, 3)	R	R
Object_Name	CharacterString	UnoccupiedCoolSetPoint	R	R
Object_Type	BACnetObjectType	ANALOG_VALUE (2)	R	R
Present_Value	REAL	0 .. 65535	R	R/W
Description	CharacterString	-	O	-
Status_Flags	BACnetStatusFlags	{FALSE, FALSE, FALSE, FALSE}	R	R
Event_State	BACnetEventState	STATE_NORMAL (0)	R	R
Reliability	BACnetReliability	NO_FAULT_DETECTED (0)	O	R
Out_Of_Service	BOOLEAN	FALSE	R	R
Update_Interval	Unsigned	-	O	-
Units	BACnetEngineeringUnits	Degrees Celsius (62) Degrees Fahrenheit (64)	R	R
Min_Pres_Value	REAL	0	O	-
Max_Pres_Value	REAL	65535	O	-
Resolution	REAL	-	O	-
COV_Increment	REAL	0	O	W
Time_Delay	Unsigned	-	O	-
Notification_Class	Unsigned	-	O	-
High_Limit	REAL	-	O	-
Low_Limit	REAL	-	O	-
Deadband	REAL	-	O	-
Limit_Enable	BACnetLimitEnable	-	O	-
Event_Enable	BACnetEventTransitionBits	-	O	-
Acked_Transitions	BACnetEventTransitionBits	-	O	-
Notify_Type	BACnetNotifyType	-	O	-
Event_Time_Stamps	BACnetArray[N] of BACnetTimeStamp	-	O	-
Profile_Name	CharacterString	-	O	-

NOTE
You can set the temperature scale in Celsius or Fahrenheit scale via DIP switches. More information in DIP switches (page 10).

7.3.26. UnoccupiedHeatSetPoint (Analog Value Object Type)

It indicates the setpoint temperature when the room is unoccupied, the heat mode is selected, and the occupancy object is enabled.

NOTE
To know more, see Occupancy Function (page 50).

Property Identifier	Property Datatype	Value	ASHRAE	Gateway
Object_Identifier	BACnetObjectIdentifier	(Analog Value, 4)	R	R
Object_Name	CharacterString	UnoccupiedHeatSetPoint	R	R
Object_Type	BACnetObjectType	ANALOG_VALUE (2)	R	R
Present_Value	REAL	0 .. 65535	R	R/W
Description	CharacterString	-	O	-
Status_Flags	BACnetStatusFlags	{FALSE, FALSE, FALSE, FALSE}	R	R
Event_State	BACnetEventState	STATE_NORMAL (0)	R	R
Reliability	BACnetReliability	NO_FAULT_DETECTED (0)	O	R
Out_Of_Service	BOOLEAN	FALSE	R	R
Update_Interval	Unsigned	-	O	-
Units	BACnetEngineeringUnits	Degrees Celsius (62) Degrees Fahrenheit (64)	R	R
Min_Pres_Value	REAL	0	O	-
Max_Pres_Value	REAL	65535	O	-
Resolution	REAL	-	O	-
COV_Increment	REAL	0	O	W
Time_Delay	Unsigned	-	O	-
Notification_Class	Unsigned	-	O	-
High_Limit	REAL	-	O	-
Low_Limit	REAL	-	O	-
Deadband	REAL	-	O	-
Limit_Enable	BACnetLimitEnable	-	O	-
Event_Enable	BACnetEventTransitionBits	-	O	-
Acked_Transitions	BACnetEventTransitionBits	-	O	-
Notify_Type	BACnetNotifyType	-	O	-
Event_Time_Stamps	BACnetArray[N] of BACnetTimeStamp	-	O	-
Profile_Name	CharacterString	-	O	-

NOTE
You can set the temperature scale in Celsius or Fahrenheit scale via DIP switches. More information in DIP switches (page 10).

7.3.27. OccupancyContinuousCheck (Binary Value Object Type)

It indicates if the system is continuously checking the setpoint and occupancy conditions.

NOTE
To know more, see Occupancy Function (page 50).

Property Identifier	Property Datatype	Value	ASHRAE	Gateway
Object_Identifier	BACnetObjectIdentifier	(Binary Value, 0)	R	R
Object_Name	CharacterString	OccupancyContinuousCheck	R	R
Object_Type	BACnetObjectType	BINARY_VALUE (5)	R	R
Present_Value	BACnetBinaryPV	INACTIVE (0) / ACTIVE (1)	R	R/W
Description	CharacterString	-	O	-
Status_Flags	BACnetStatusFlags	{FALSE, FALSE, FALSE, FALSE}	R	R
Event_State	BACnetEventState	STATE_NORMAL (0)	R	R
Reliability	BACnetReliability	NO_FAULT_DETECTED (0)	O	R
Out_Of_Service	BOOLEAN	FALSE	R	R
Inactive_Text	CharacterString	Disabled	O	R
Active_Text	CharacterString	Enabled	O	R
Change_Of_State_Time	BACnetDatetime	-	O	-
Change_Of_State_Count	Unsigned	-	O	-
Time_Of_State_Count_Reset	BACnetDatetime	-	O	-
Elapsed_Active_Time	Unsigned	-	O	-
Time_Of_Active_Time_Reset	BACnetDatetime	-	O	-
Minimum_Off_Time	Unsigned32	-	O	-
Minimum_On_Time	Unsigned32	-	O	-
Priority_Array	BACnetPriorityArray	BACnetPriorityArray	R	-
Relinquish_Default	BACnetBinaryPV	INACTIVE (0)	R	-
Time_Delay	Unsigned	-	O	-
Notification_Class	Unsigned	-	O	-
Alarm_Value	BACnetBinaryPV	-	O	-
Event_Enable	BACnetEventTransitionBits	-	O	-
Acked_Transitions	BACnetEventTransitionBits	-	O	-
Notify_Type	BACnetNotifyType	-	O	-
Event_Time_Stamps	BACnetArray[N] of BACnetTimeStamp	-	O	-
Profile_Name	CharacterString	-	O	-

7.3.28. UnoccupiedDeadbandAction (Binary Value Object Type)

It indicates the action to be performed when Unoccupancy is enabled, and Room Temperature is within the deadband.

NOTE
To know more, see Occupancy Function (page 50).

Property Identifier	Property Datatype	Value	ASHRAE	Gateway
Object_Identifier	BACnetObjectIdentifier	(Binary Value, 1)	R	R
Object_Name	CharacterString	UnoccupiedDeadbandAction	R	R
Object_Type	BACnetObjectType	BINARY_VALUE (5)	R	R
Present_Value	BACnetBinaryPV	INACTIVE (0) / ACTIVE (1)	R	R/W
Description	CharacterString	-	O	-
Status_Flags	BACnetStatusFlags	{FALSE, FALSE, FALSE, FALSE}	R	R
Event_State	BACnetEventState	STATE_NORMAL (0)	R	R
Reliability	BACnetReliability	NO_FAULT_DETECTED (0)	O	R
Out_Of_Service	BOOLEAN	FALSE	R	R
Inactive_Text	CharacterString	Off	O	R
Active_Text	CharacterString	CurrentMode	O	R
Change_Of_State_Time	BACnetDatetime	-	O	-
Change_Of_State_Count	Unsigned	-	O	-
Time_Of_State_Count_Reset	BACnetDatetime	-	O	-
Elapsed_Active_Time	Unsigned	-	O	-
Time_Of_Active_Time_Reset	BACnetDatetime	-	O	-
Minimum_Off_Time	Unsigned32	-	O	-
Minimum_On_Time	Unsigned32	-	O	-
Priority_Array	BACnetPriorityArray	BACnetPriorityArray	R	-
Relinquish_Default	BACnetBinaryPV	INACTIVE (0)	R	-
Time_Delay	Unsigned	-	O	-
Notification_Class	Unsigned	-	O	-
Alarm_Value	BACnetBinaryPV	-	O	-
Event_Enable	BACnetEventTransitionBits	-	O	-
Acked_Transitions	BACnetEventTransitionBits	-	O	-
Notify_Type	BACnetNotifyType	-	O	-
Event_Time_Stamps	BACnetArray[N] of BACnetTimeStamp	-	O	-
Profile_Name	CharacterString	-	O	-

7.3.29. LockRemoteControl (Binary Value Object Type)

It is used to lock or unlock the AC remote controller.

Property Identifier	Property Datatype	Value	ASHRAE	Gateway
Object_Identifier	BACnetObjectIdentifier	(Binary Value, 2)	R	R
Object_Name	CharacterString	LockRemoteControl	R	R
Object_Type	BACnetObjectType	BINARY_VALUE (5)	R	R
Present_Value	BACnetBinaryPV	INACTIVE (0) / ACTIVE (1)	R	R/W
Description	CharacterString	-	O	-
Status_Flags	BACnetStatusFlags	{FALSE, FALSE, FALSE, FALSE}	R	R
Event_State	BACnetEventState	STATE_NORMAL (0)	R	R
Reliability	BACnetReliability	NO_FAULT_DETECTED (0)	O	R
Out_Of_Service	BOOLEAN	FALSE	R	R
Inactive_Text	CharacterString	Unlocked	O	R
Active_Text	CharacterString	Locked	O	R
Change_Of_State_Time	BACnetDatetime	-	O	-
Change_Of_State_Count	Unsigned	-	O	-
Time_Of_State_Count_Reset	BACnetDatetime	-	O	-
Elapsed_Active_Time	Unsigned	-	O	-
Time_Of_Active_Time_Reset	BACnetDatetime	-	O	-
Minimum_Off_Time	Unsigned32	-	O	-
Minimum_On_Time	Unsigned32	-	O	-
Priority_Array	BACnetPriorityArray	BACnetPriorityArray	R	-
Relinquish_Default	BACnetBinaryPV	INACTIVE (0)	R	-
Time_Delay	Unsigned	-	O	-
Notification_Class	Unsigned	-	O	-
Alarm_Value	BACnetBinaryPV	-	O	-
Event_Enable	BACnetEventTransitionBits	-	O	-
Acked_Transitions	BACnetEventTransitionBits	-	O	-
Notify_Type	BACnetNotifyType	-	O	-
Event_Time_Stamps	BACnetArray[N] of BACnetTimeStamp	-	O	-
Profile_Name	CharacterString	-	O	-

7.3.30. DIP_SW_S1_status (Analog Input Object Type)

It indicates the status of the DIP switch block SW1 in decimal value. To get the status of each individual switch (position) of SW1, just convert it to binary. The gateway reads this value only when booting up.

Property Identifier	Property Datatype	Value	ASHRAE	Gateway
Object_Identifier	BACnetObjectIdentifier	(Analog Input, 9)	R	R
Object_Name	CharacterString	DIP_SW_S1_status	R	R
Object_Type	BACnetObjectType	ANALOG_INPUT (0)	R	R
Present_Value	BACnetBinaryPV	0 .. 255	R	R
Description	CharacterString	-	O	-
Device_Type	CharacterString	-	O	-
Status_Flags	BACnetStatusFlags	{FALSE, FALSE, FALSE, FALSE}	R	R
Event_State	BACnetEventState	STATE_NORMAL (0)	R	R
Reliability	BACnetReliability	NO_FAULT_DETECTED (0)	O	R
Out_Of_Service	BOOLEAN	FALSE / TRUE	R	R
Change_Of_State_Time	BACnetDatetime	-	O	-
Change_Of_State_Count	Unsigned	-	O	-
Time_Of_State_Count_Reset	BACnetDatetime	-	O	-
Elapsed_Active_Time	Unsigned	-	O	-
Time_Of_Active_Time_Reset	BACnetDatetime	-	O	-
Time_Delay	Unsigned	-	O	-
Notification_Class	Unsigned	-	O	-
Alarm_Value	BACnetBinaryPV	-	O	-
Event_Enable	BACnetEventTransitionBits	-	O	-
Acked_Transitions	BACnetEventTransitionBits	-	O	-
Notify_Type	BACnetNotifyType	-	O	-
Event_Time_Stamps	BACnetArray[N] of BACnetTimeStamp	-	O	-
Profile_Name	CharacterString	-	O	-
Units	BACnetEngineeringUnits	No units (95)	R	R
COV_Increment	REAL	0	O	W

7.3.31. DIP_SW_S2_status (Analog Input Object Type)

It indicates the status of the DIP switch block SW2 in decimal value. To get the status of each individual switch (position) of SW2, just convert it to binary. The gateway reads this value only when booting up.

Property Identifier	Property Datatype	Value	ASHRAE	Gateway
Object_Identifier	BACnetObjectIdentifier	(Analog Input, 10)	R	R
Object_Name	CharacterString	DIP_SW_S2_status	R	R
Object_Type	BACnetObjectType	ANALOG_INPUT (0)	R	R
Present_Value	BACnetBinaryPV	0 .. 255	R	R
Description	CharacterString	-	O	-
Device_Type	CharacterString	-	O	-
Status_Flags	BACnetStatusFlags	{FALSE, FALSE, FALSE, FALSE}	R	R
Event_State	BACnetEventState	STATE_NORMAL (0)	R	R
Reliability	BACnetReliability	NO_FAULT_DETECTED (0)	O	R
Out_Of_Service	BOOLEAN	FALSE / TRUE	R	R
Change_Of_State_Time	BACnetDatetime	-	O	-
Change_Of_State_Count	Unsigned	-	O	-
Time_Of_State_Count_Reset	BACnetDatetime	-	O	-
Elapsed_Active_Time	Unsigned	-	O	-
Time_Of_Active_Time_Reset	BACnetDatetime	-	O	-
Time_Delay	Unsigned	-	O	-
Notification_Class	Unsigned	-	O	-
Alarm_Value	BACnetBinaryPV	-	O	-
Event_Enable	BACnetEventTransitionBits	-	O	-
Acked_Transitions	BACnetEventTransitionBits	-	O	-
Notify_Type	BACnetNotifyType	-	O	-
Event_Time_Stamps	BACnetArray[N] of BACnetTimeStamp	-	O	-
Profile_Name	CharacterString	-	O	-
Units	BACnetEngineeringUnits	No units (95)	R	R
COV_Increment	REAL	0	O	W

7.3.32. SerialNumber (Analog Input Object Type)

It indicates the gateway's serial number: **000EXXXXX**

- 000E is a constant value and it's not included in the Present_Value property.
- XXXXX is a unique value for each gateway. This is the information the Present_Value provides.

Property Identifier	Property Datatype	Value	ASHRAE	Gateway
Object_Identifier	BACnetObjectIdentifier	(Analog Input, 11)	R	R
Object_Name	CharacterString	SerialNumber	R	R
Object_Type	BACnetObjectType	ANALOG_INPUT (0)	R	R
Present_Value	REAL	00000 .. 99999	R	R
Description	CharacterString	-	O	-
Device_Type	CharacterString	-	O	-
Status_Flags	BACnetStatusFlags	{FALSE, FALSE/TRUE, FALSE, FALSE}	R	R
Event_State	BACnetEventState	STATE_NORMAL (0)	R	R
Reliability	BACnetReliability	NO_FAULT_DETECTED (0) UNRELIABLE_OTHER (7)	O	R
Out_Of_Service	BOOLEAN	FALSE	R	R
Change_Of_State_Time	BACnetDatetime	-	O	-
Change_Of_State_Count	Unsigned	-	O	-
Time_Of_State_Count_Reset	BACnetDatetime	-	O	-
Elapsed_Active_Time	Unsigned	-	O	-
Time_Of_Active_Time_Reset	BACnetDatetime	-	O	-
Time_Delay	Unsigned	-	O	-
Notification_Class	Unsigned	-	O	-
Alarm_Value	BACnetBinaryPV	-	O	-
Event_Enable	BACnetEventTransitionBits	-	O	-
Acked_Transitions	BACnetEventTransitionBits	-	O	-
Notify_Type	BACnetNotifyType	-	O	-
Event_Time_Stamps	BACnetArray[N] ofBACnetTimeStamp	-	O	-
Profile_Name	CharacterString	-	O	-
Units	BACnetEngineeringUnits	No units (95)	R	R
COV_Increment	REAL	0	O	W

8. Occupancy Function

The Occupancy function determines the AC unit's behavior depending on the presence or absence of people in the room. This signal is processed directly in the Intesis gateway and has the capacity to modify three parameters of the AC system: Setpoint, Mode, and On/Off.

IMPORTANT
This function requires a presence sensor on the control system (BMS) side, which determines the state of the **Occupancy** object:

- **Occupied**: Someone is in the room.
- **Unoccupied**: No one is in the room.
- **Disabled**: The function is disabled

Besides the Occupancy object, and to adjust the settings of the Occupancy function, the gateway offers these BACnet objects:

- **Occupancy Cool Setpoint (OCS):** Setpoint temperature when the AC unit is in cool mode and someone is present in the room.
- **Unoccupancy Cool SetPoint (UCS):** Setpoint temperature when the AC unit is in cool mode and no one is in the room.
- **Occupancy Heat Setpoint (OHS):** Setpoint temperature when the AC unit is in heat mode and someone is present in the room.
- **Unoccupancy Heat SetPoint (UHS):** Setpoint temperature when the AC unit is in heat mode and no one is in the room.

Figure 3. Temperature setpoint objects related to the room's occupancy status and the AC unit's mode

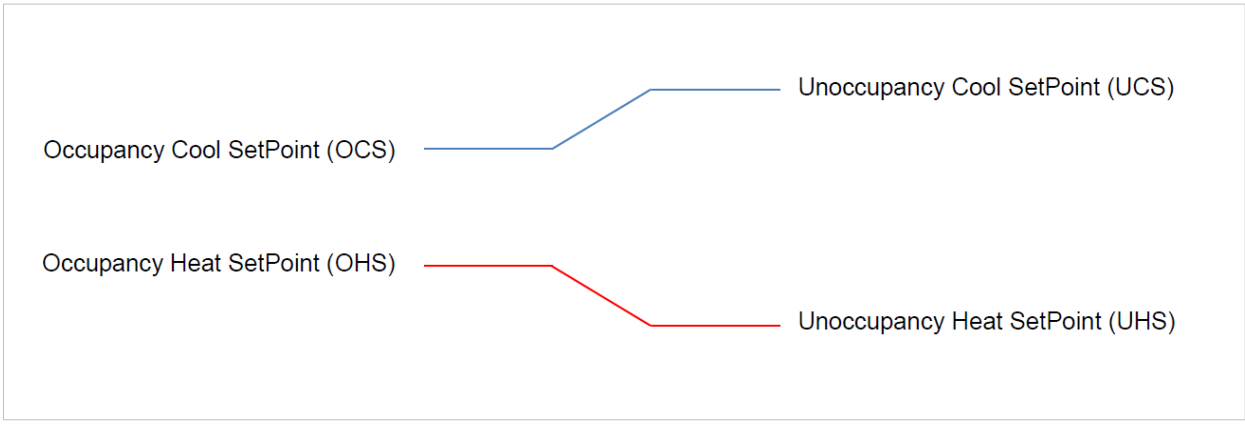

NOTICE
The minimum difference between Cool and Heat setpoints must be 2°C / 4°F.

- **Occupancy Continuous check:** It determines when the gateway checks the room's occupancy:
  - If this object's value is 1 (active), the gateway checks the occupancy when the occupancy status and the room's temperature change.

- If this object's value is 0 (inactive), the gateway only checks the occupancy when the occupancy status changes.

- **Unoccupied Deadband Action:** It determines the AC unit's behavior when the room is unoccupied and the ambient temperature is within the deadband.
  - If this object's value is 1 (active), the indoor unit will remain on.
  - If this object's value is 0 (inactive), the indoor unit will turn off.

When there is presence in the room, and according to the current room temperature, the AC unit's **mode, setpoint,** and **on/off** will be set to:

Condition	Setpoint	Mode	On/Off
Room temperature > OCS	Current OCS value	Cool	On
Room temperature < OHS	Current OCS value	Heat	On
OCS < Room temperature > OHS	OCS/OHS depending on the current mode (If Fan or Dry mode is active, no setpoint is sent)	Current mode	On

When there is no presence in the room, and according to the current room temperature, the AC unit's **mode, setpoint** and **on/of**f will be set to:

Condition	Setpoint	Mode	On/Off
Room temperature > OCS	Current UCS value	Cool	On
Room temperature < OHS	Current UHS value	Heat	On
OCS < Room temperature > OHS	UCS/UHS depending on the current mode (If Fan or Dry mode is active, no setpoint is sent)	Current mode	On (Deadband action=1)
			Off (Deadband action=0)

NOTICE
Any local change (for example with the remote control) in the Setpoint, Mode, or the On/Off signal will disable the Occupancy function.

9. Virtual Temperature Function

Typically, the temperature sensor used by Mitsubishi Electric indoor units[1] to establish the temperature setpoint is placed inside the indoor unit itself. This may provoke a substantial difference between the temperature perceived by this sensor and the temperature perceived by the room occupants, especially if the indoor unit is mounted away, such as on a high ceiling or a distant wall.

NOTE

[1] Referring to the indoor units compatible with this IN485MIT001I000 gateway.

Figure 4. In this case, the room temperature is four degrees Celsius less than the temperature perceived by the indoor unit's sensor.

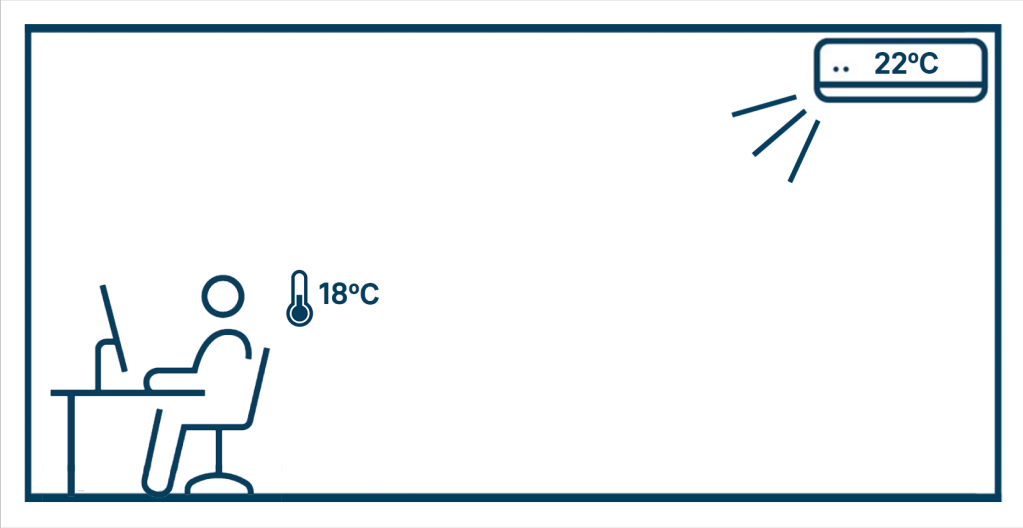

Also, Mitsubishi Electric AC systems don't allow the IN485MIT001I000 gateway to provide the reference temperature, i.e., to overwrite the value reported by the indoor unit's sensor, which is the value the AC system uses as the reference temperature.

To overcome these issues, this IN485MIT001I000 gateway implements the Virtual Temperature function.

With the Virtual Temperature function, the gateway uses the value reported by a temperature sensor from the BMS side, i.e., a sensor connected to the BACnet installation, to apply a formula that establishes the setpoint temperature for the indoor unit. This recalculated setpoint can effectively be sent to the AC system by the gateway to overwrite the AC system's reference temperature and, at the same time, it offsets the difference between the real temperature in the room and the temperature perceived by the indoor unit.

NOTICE

To use the value reported by the BMS side's sensor, the gateway implements the BACnet object **RoomTemperature_command (Analog Output)**.

To know more about all the objects dedicated to temperature settings, see Considerations on Temperature Signals (page 53).

HOW THE VIRTUAL TEMPERATURE FUNCTION WORKS

When the Virtual Temperature function is active, the gateway is constantly applying the following formula:

$S_{AC} = T_{AC} – (T_{BMS} – S_{BMS})$

Where:

- S_{AC}: Recalculated temperature setpoint sent to the indoor unit after the gateway applies the formula.
- T_{AC}: Indoor unit's reference temperature.
- T_{BMS}: Ambient temperature reported by the sensor connected to the BMS side.
- S_{BMS}: Temperature setpoint requested from the BMS side.

Once activated, the Virtual Temperature function recalculates the setpoint when any of these values changes.

HOW TO ACTIVATE THE VIRTUAL TEMPERATURE FUNCTION

Follow this procedure:

1. Write the desired setpoint temperature in the **Setpoint_command** BACnet object.
2. Read the temperature value reported by a temperature sensor from the BMS side.
3. Write this value in the **RoomTemperature_command** BACnet object.

Once the gateway receives valid values for these objects, the Virtual Temperature function is automatically activated.

NOTE
When starting up the gateway, the **RoomTemperature_command**, which is the dedicated object to write the ambient temperature perceived from the BMS side, reports a value of -32768 (0x8000).

NOTICE
When starting up the gateway, the Present_Value property for the RoomTemperature_command object is 0, and the Reliability property displays **UNRELIABLE_OTHER (7)**. This means that no external temperature reference has been provided to the object, so the system is not applying the Virtual Temperature function. However, after receiving the first value, the Reliability property changes to **NO_FAULT_DETECTED (0)**. After that, any value can be used in the temperature range, including 0.

9.1. Considerations on Temperature Signals

NOTE
You can set the temperature signals in degrees Celsius or Fahrenheit via the DIP switch SW2. More information in DIP switches (page 10).

Table 15. Objects dedicated to temperature signals and to the Virtual Temperature function

BACnet object	Function when the Virtual Temperature function is inactive	Function when the Virtual Temperature function is active
Setpoint_status (Analog Input)	It indicates the temperature setpoint sent to the indoor unit. It will report the same value as the value introduced in the Setpoint_command object.	It indicates the recalculated temperature setpoint sent to the indoor unit after the gateway applies the $S_{AC} = T_{AC} – (T_{BMS} – S_{BMS})$ formula. It may report a value different from that introduced in the Setpoint_command object.

BACnet object	Function when the Virtual Temperature function is inactive	Function when the Virtual Temperature function is active
Setpoint_command (Analog Output)	It is used to request the temperature setpoint from the BMS side. It will report the same value as a wired remote controller connected to the indoor unit (if available).	It is used to request the temperature setpoint from the BMS side. It may report a value different from that reported by a wired remote controller connected to the indoor unit (if available).
RoomTemperature_status (Analog Input)	It indicates the ambient temperature perceived by the sensor from the AC system side (the sensor inside the indoor unit or inside the wired remote controller, if available).	It indicates the ambient temperature perceived by the sensor from the AC system side (the sensor inside the indoor unit or inside the wired remote controller, if available).
RoomTemperature_command (Analog Output)	It is used to activate the Virtual Temperature function by writing the value reported from a BMS side sensor.	It indicates the temperature reported from a BMS side sensor.
VirtualTemperatureActive (Binary Input)	It reports a value of 0	It reports a value of 1
UserSetpoint_status (Analog Input)	It indicates the temperature setpoint requested from the BMS side.	It indicates the original temperature setpoint requested from the BMS side.

VIRTUAL TEMPERATURE FUNCTION EXAMPLE CASE

Imagine a very cold room with a temperature of 10°C. There's an AC indoor unit mounted in the ceiling, which is very high.

The technician responsible for the BMS wants to raise the room temperature to 20°C. To achieve this, she accesses the console and sets this value in the BACnet object **Setpoint_command (Analog Output)**. The same value of “20” is also reflected in the BACnet object **Setpoint_status (Analog Input)**.

A few minutes later, the technician checks the BACnet object **RoomTemperature_status (Analog Input)** to determine the temperature reported by the indoor unit’s sensor, which reads 17°C. However, the BMS sensor in the room reports a temperature of 13°C. The technician knows that the BMS sensor is better positioned than the indoor unit’s sensor. Unfortunately, the indoor unit does not allow the gateway a direct overwriting of the value reported by its sensor temperature. To address this, the technician activates the Virtual Temperature function.

To activate it, she writes the temperature currently perceived by the BMS sensor (13°C) into the BACnet object **RoomTemperature_command (Analog Output)**. As soon as she inputs “13” into that object/register, the BACnet object **VirtualTemperatureActive (Binary Input)** transitions from “0” to “1.” This indicates that the Virtual Temperature function is now active and will continuously apply the formula to recalculate the setpoint temperature sent to the indoor unit.

At this moment, the formula values are: 17-(13-20)=24. Therefore, the Virtual Temperature function is currently sending a setpoint of 24°C to the indoor unit, and this value is reflected in the BACnet object **Setpoint_status (Analog Input)**.

After a few minutes, the technician checks the BACnet object **RoomTemperature_command (Analog Output)** to find the temperature perceived by the BMS sensor: 19°C. Then, she looks at the BACnet object **RoomTemperature_status (Analog Input)**, which reports the temperature sensed by the indoor unit: 24°C.

At this point, the formula applied by the Virtual Temperature function is based on these numbers: 24-(19-20)=25. The technician observes the BACnet object **Setpoint_status (Analog Input)** and realizes that the Virtual Temperature function has established the setpoint at 25°C.

10. Error Codes

Error Code	Error CodeM	Error in RC	Description
-1	CommError	-	AC unit is offline
0	0	-	No error
1102	1102	1102	Discharge Temperature high
1108	1108	1108	Internal thermostat detector working (49C)
1110	1110	1110	Outdoor unit fail
1300	1300	1300	Pressure low
1302	1302	1302	Pressure high (High pressure probe working 63H)
1503	1503	1503	Protection against freeze or battery high temperature
1504	1504	1504	Protection against freeze or battery high temperature
1504	1504	1504	Overheating protection
1509	1509	1509	High pressure error (ball valve closed)
1520	1520	1520	Super heating anomaly due to low temp. of discharge. (TH4)
2500	2500	2500	Erroneous operation of drain pump
2502	2502	2502	Erroneous operation of drain pump
2503	2503	2503	Drain sensor anomaly (DS)
4030	4030	4030	Serial transmission error
4100	4100	4100	Compressor pause due to excess of current (initial block)
4101	4101	4101	Compressor pause due to excess of current (overload)
4102	4102	4102	Phase detection opened
4103	4103	4103	Antiphase detection
4108	4108	4108	Phase opened in phase L2 or connector 51CM opened
4118	4118	4118	Error in the antiphase detector (electronic board)
4124	4124	4124	Connector 49L opened
4210	4210	4210	Cut due to overcurrent of compressor
4220	4220	4220	Voltage anomaly
4230	4230	4230	Radiator panel temperature anomaly (TH8)
5101	5101	5101	Ambient temperature probe anomaly (TH1), indoor unit
5102	5102	5102	Liquid probe anomaly (TH2)
5102	5102	5102	Cond/Evap probe anomaly (TH5)
5104	5104	5104	Error detection in discharge temperature
5105	5105	5105	Outdoor probe error TH3
5106	5106	5106	Outdoor probe error TH7
5107	5107	5107	Outdoor probe error TH6
5110	5110	5110	Outdoor probe error TH8
5202	5202	5202	Connector 63L opened
5300	5300	5300	Current probe error
6600	6600	6600	MNET duplicated address definition

Error Code	Error CodeM	Error in RC	Description
6602	6602	6602	MNET Line transmission hardware error
6603	6603	6603	MNET BUS busy
6606	6606	6606	MNET Line transmission error
6607	6607	6607	MNET transmission error
6607	6607	6607	MNET without ack
6608	6608	6608	MNET transmission error
6608	6608	6608	MNET without response
6831	6831	6831	AC's remote command transmission error (reception error)
6832	6832	6832	AC's remote command transmission error (transmission error)
6840	6840	6840	Transmission error with the indoor/ outdoor unit (reception error)
6841	6841	6841	Transmission error with the indoor/ outdoor unit (transmission error)
6844	6844	6844	Error in interconnection cable in the indoor/outdoor unit, indoor unit number deactivated (5 min or more)
6845	6845	6845	Error in interconnection cable in the indoor/outdoor unit (cabling error, disconnection)
6846	6846	6846	Initial timer deactivated

NOTE
If you detect a non-listed error code, please contact Mitsubishi Electric technical support.