ENGLISH

700series Metering Gateway - IN702MEB***0000

Integrate Modbus Devices and Meters, M-Bus Meters, and Pulse Meters into Modbus, KNX, and BACnet Control Systems

USER MANUAL
Version 1.0.0
Publication date 2025-06-20

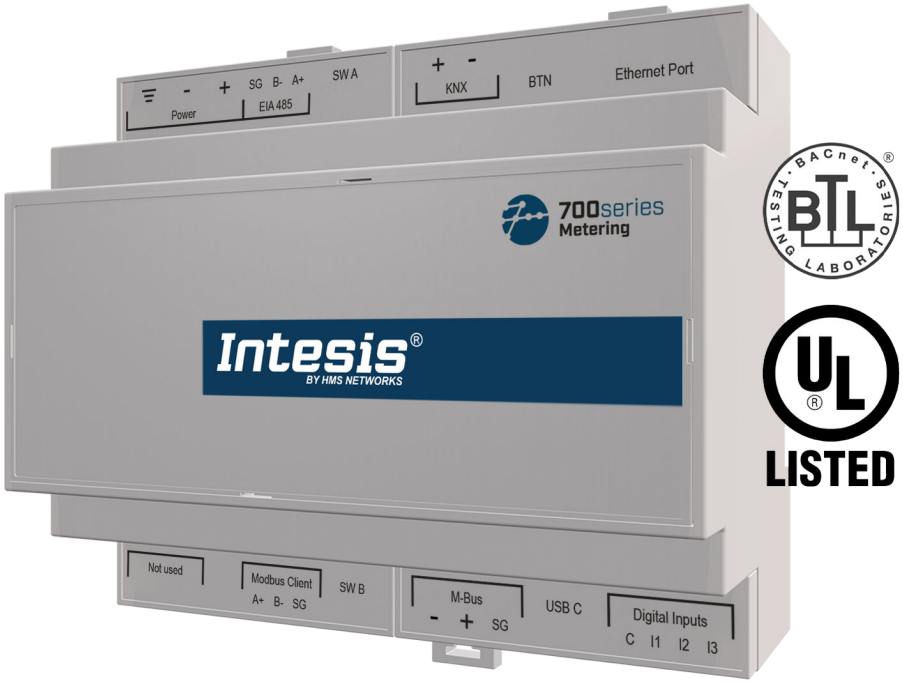

14 rue Edouard Petit
42000 St-Etienne
Tel : +33 477 92 03 56
Email : contact@rg2i.com
www.rg2i.com

Copyright © 2025 Intesis

Disclaimer

The information in this document is for informational purposes only. Please inform HMS Networks of any inaccuracies or omissions found in this document. HMS Networks disclaims any responsibility or liability for any errors that may appear in this document.

HMS Networks reserves the right to modify its products in line with its policy of continuous product development. The information in this document shall therefore not be construed as a commitment on the part of HMS Networks and is subject to change without notice. HMS Networks makes no commitment to update or keep current the information in this document.

The data, examples and illustrations found in this document are included for illustrative purposes and are only intended to help improve understanding of the functionality and handling of the product. In view of the wide range of possible applications of the product, and because of the many variables and requirements associated with any particular implementation, HMS Networks cannot assume responsibility or liability for actual use based on the data, examples or illustrations included in this document nor for any damages incurred during installation of the product. Those responsible for the use of the product must acquire sufficient knowledge in order to ensure that the product is used correctly in their specific application and that the application meets all performance and safety requirements including any applicable laws, regulations, codes and standards. Further, HMS Networks will under no circumstances assume liability or responsibility for any problems that may arise as a result from the use of undocumented features or functional side effects found outside the documented scope of the product. The effects caused by any direct or indirect use of such aspects of the product are undefined and may include e.g. compatibility issues and stability issues.

Table of Contents

1. Description and Order Codes 1

2. Licensing 2

3. General Information 3

3.1. Intended Use of the User Manual 3
3.2. General Safety Information 3
3.3. Admonition Messages and Symbols 4

4. Overview 5

4.1. Inside the Package 6
4.2. Main Features 6
4.3. General Functionality 7
4.4. Gateway Capacity 7

5. Quick Start Guide 9

6. Hardware 10

6.1. Mounting 10
6.2. Connection 11
6.2.1. Gateway Connectors 12
6.2.2. Connection of the BMS Communication Bus 13
6.2.2.1. Connection to Modbus 13
6.2.2.2. Connection to KNX 15
6.2.2.3. Connection to BACnet 15
6.2.3. Connection of the Devices/Meters 16
6.2.3.1. Modbus Devices/Meters 16
6.2.3.2. M-Bus Meters 17
6.2.3.3. Pulse Meters 17
6.2.4. Connection to the Power Supply 18
6.2.5. Connection to a Computer for Configuration 18
6.3. Gateway Layout 19
6.4. LED Indicators 20
6.5. DIP Switches 20
6.6. Push Button 21
6.7. Technical Specifications 22
6.8. Dimensions 23

7. Available Protocol Combinations 24

7.1. Integration into Modbus Systems 25
7.1.1. Modbus Registers 25
7.2. Integration into KNX Systems 27
7.2.1. KNX Communication Objects 27
7.3. Integration into BACnet Systems 29
7.3.1. BACnet Objects 29

8. Late Configuration: Change the Gateway's Protocol 31

1. Description and Order Codes

IN702MEB*0000 network gateway.**

Integration of Modbus devices and meters, M-Bus meters, and pulse meters into a Modbus, KNX, and BACnet control system.

You can set up this Intesis network gateway for the following communication protocols:

- Modbus TCP
- Modbus RTU
- KNX TP
- BACnet/IP
- BACnet MS/TP

LEGACY ORDER CODES
INMBSMEB0100000 INMBSMEB0200000 INMBSMEB060000 INMBSMEB12000000 INBACMEB0100000 INBACMEB0200000 INBACMEB060000 INBACMEB12000000 INKNXMEB0100000 INKNXMEB0200000 INKNXMEB060000 INKNXMEB12000000

ORDER CODE
IN702MEB***0000

NOTE
The order code may vary depending on the product seller and the buyer's location.

2. Licensing

Distribution license(s) for the gateway:

Order Code	Maximum number of devices[1]
IN702MEB0100000	10
IN702MEB0200000	20
IN702MEB0600000	60
IN702MEB1000000	100

NOTICE

[1] This limit does not take into consideration the type of device or its protocol. For example, for the IN702MEB0100000 (license for 10 devices), you can connect three M-Bus energy meters + two liquid flow pulse meters + two Modbus energy meters + two Modbus EV chargers + one Modbus inverter from the PV system. An exception is pulse meters, which are limited to three by the hardware.

The number of signals allowed in this gateway is also limited and may affect the permitted number of devices. To know more, see Gateway Capacity (page 7).

NOTE

The order code may vary depending on the product seller and the buyer's location.

3. General Information

3.1. Intended Use of the User Manual

This manual contains the main features of this gateway and the instructions for its appropriate installation, configuration, and operation.

Any person who installs, configures, or operates this gateway or any associated equipment should be aware of this manual's contents.

Keep this manual for future reference during the installation, configuration, and operation.

3.2. General Safety Information

IMPORTANT
Follow these instructions carefully. Improper work may seriously harm your health and damage the gateway and/or any other equipment connected to it.

Only technical personnel, following these instructions and the country legislation for installing electrical equipment, can install and manipulate this gateway.

Install this gateway indoors, in a restricted access location, avoiding exposure to direct solar radiation, water, high relative humidity, or dust.

Preferably, mount this gateway on a DIN rail inside a grounded metallic cabinet, following the instructions in this manual.

If mounting on a wall, firmly fix this gateway on a non-vibrating surface, following the instructions in this manual.

The gateway is to be connected only to networks without routing to the outside plant.

All communication ports are considered for indoor use and must only be connected to SELV circuits.

Disconnect all systems from power before manipulating and connecting them to the gateway.

Use SELV-rated NEC class 2 or limited power source (LPS) power supply.

MANDATORY GROUND CONNECTION

YOU MUST connect the gateway to the installation ground terminal. Always use the gateway's dedicated connector ⏚

NEVER use the positive or negative gateway's connectors to establish this connection. Not following this indication can cause ground loops and damage the gateway and/or any other equipment connected to it.

If the power supply includes a ground connection, that terminal must be connected to ground.

Use a circuit breaker between the gateway and the power supply. Rating: 250 V, 6 A.

Supply the correct voltage to power the gateway. The admitted range is detailed in the technical specifications table.

Respect the expected polarity of power and communication cables when connecting them to the gateway.

This Intesis gateway is designed for installation in an enclosure. When the device is mounted outside an enclosure, precautions should be taken to avoid electrostatic discharges to the unit in environments with static levels above 4 kV. When working in an enclosure (e.g., making adjustments, setting switches, etc.), typical anti-static precautions should be observed before touching the unit.

Binary inputs, if present, are potential-free contact. Do not connect any voltage.

These safety instructions in other languages can be found here.

3.3. Admonition Messages and Symbols

CAUTION
Instruction that must be followed to avoid a potentially hazardous situation that, if not avoided, could result in minor or moderate injury.

IMPORTANT
Instruction that must be followed to avoid a risk of reduced functionality and/or damage to the equipment or to avoid a network security risk.

NOTE
Additional information which may facilitate installation and/or operation.

TIP
Helpful advice and suggestions.

NOTICE
Remarkable Information.

4. Overview

Protocol combinations supported by the IN702MEB***0000 gateway:

Gateway's client interface	↔	Gateway's server interface
Modbus TCP and RTU	to	Modbus TCP and RTU
M-Bus		KNX
Digital pulse		BACnet/IP and MS/TP

IMPORTANT
This document assumes that the user is familiar with these technologies.

Figure 1. Integration of Modbus devices and meters, M-Bus meters, and pulse meters into Modbus TCP and/or Modbus RTU installations

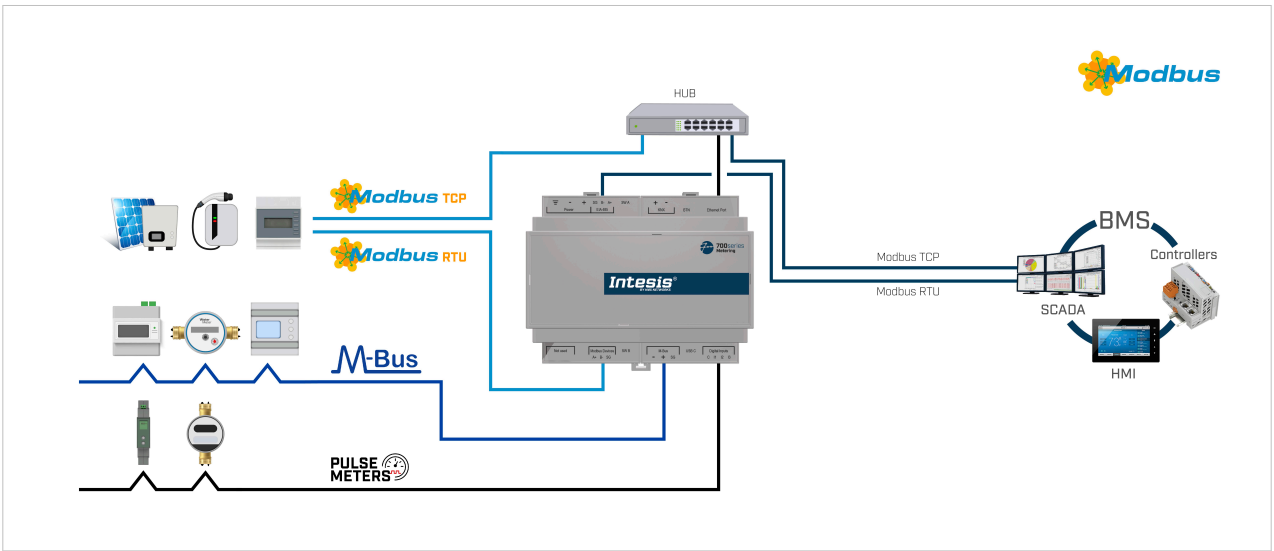

Figure 2. Integration of Modbus devices and meters, M-Bus meters, and pulse meters into KNX TP installations

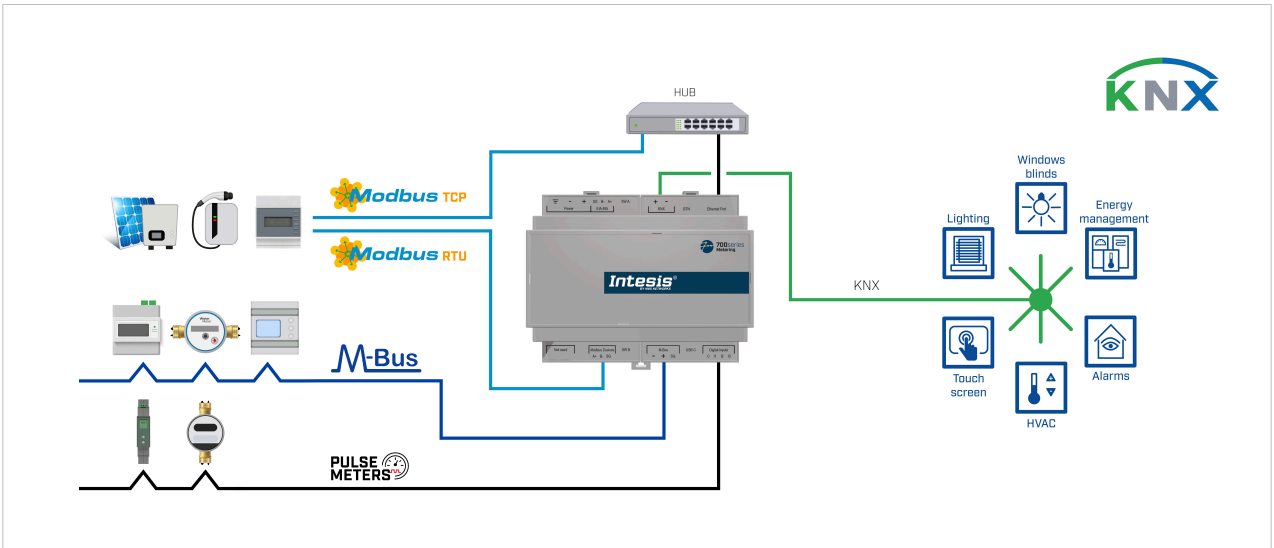

Figure 3. Integration of Modbus devices and meters, M-Bus meters, and pulse meters into BACnet/IP or BACnet MS/TP installations

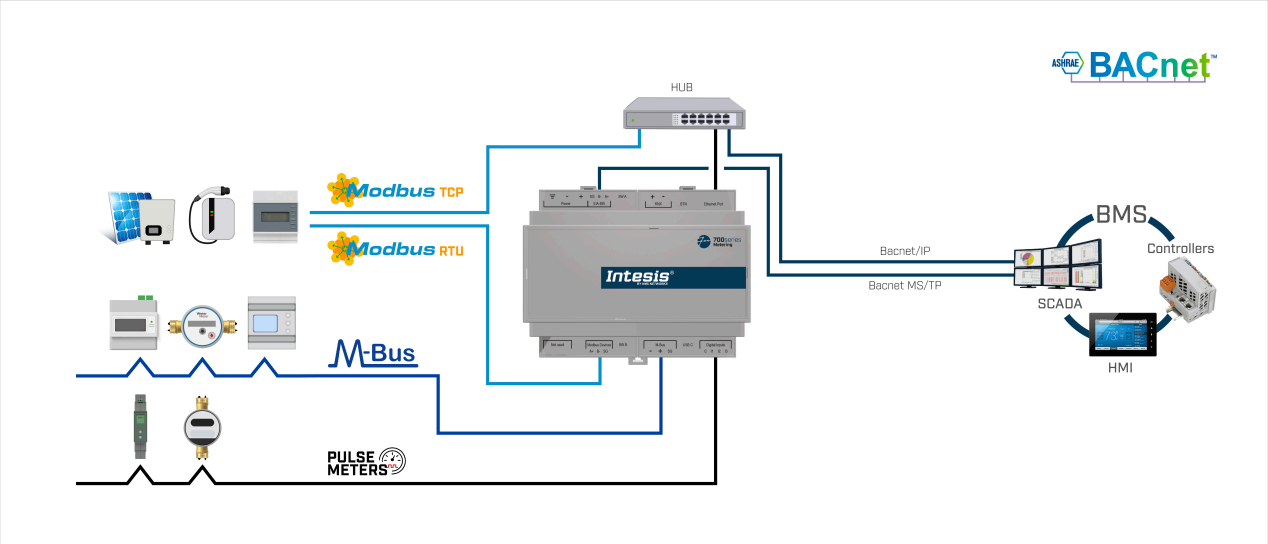

4.1. Inside the Package

ITEMS INCLUDED

- Intesis IN702MEB∗∗∗0000 network gateway
- Installation guide

4.2. Main Features

- UL and BTL certified.
- Several protocol combinations available: Configurable for Modbus TCP and RTU, KNX TP, BACnet/IP and MS/TP.
- M-Bus meters, Modbus meters, Modbus devices other than meters, and pulse meters are supported at the same time. Any type of metering device is supported: energy meters, water meters, gas meters, flow meters, etc.
- Four licenses with different capacities: 10, 20, 60, and 100 devices.
- Scan function: Find the meters connected to the bus and get their signal values.
- Inter-polling interval configurable to up to 48 hours to extend meter battery life.
- Error detection of every meter device.
- 2 x DIP switches for the EIA-485 connector termination and polarization configuration.
- 14 LEDs indicate the operating status for both the gateway and the communication bus.
- DIN rail and wall mounting case.
- Accredited with the main certifications for electronic equipment.
- Multiple ports for serial and TCP/IP communication:
  - 2 x Green pluggable terminal blocks for EIA-485 (3 poles).
  - Orange pluggable terminal block for KNX (2 poles).
  - Ethernet.
  - USB Type-C port for connection to the PC.
  - Green pluggable terminal block for M-Bus connection (3 poles).
  - Green pluggable terminal block for binary inputs (4 poles).

4.3. General Functionality

The IN702MEB∗∗∗0000 network gateway enables communication between Modbus meters/devices, M-Bus meters, and pulse meters on one side and a control system based on Modbus TCP, Modbus RTU, KNX-TP, BACnet/IP, or BACnet MS/TP on the other side.

ON MODBUS DEVICES

This gateway has been designed with a focus on the integration of meters into a building management system (BMS) or controller. However, apart from Modbus meters, the gateway also supports Modbus installations such as photovoltaic systems and EV chargers.

ON METERING SYSTEMS

The gateway can integrate the metering system of any building service, such as water, gas, or electric infrastructure, into a BMS or controller.

The gateway polls the metering devices either in a defined interval[1] or when commanded from the BMS[2].

NOTICE

[1] You can define this interval using the Intesis MAPS configuration tool. The interval of time allows up to 48 hours, which is especially appropriate for some battery-powered metering devices. With every poll, the gateway stores the values obtained in its memory and transmits them to the BMS when requested.

[2] The gateway grants full control of the metering system from the BMS, allowing polling of all metering devices or specific metering devices at any time. Furthermore, the interval configured with Intesis MAPS can also be activated and deactivated from the BMS.

4.4. Gateway Capacity

MAXIMUM NUMBER OF DEVICES

IN702MEB0100000	IN702MEB0200000	IN702MEB0600000	IN702MEB1000000
10	20	60	100

NOTE

The maximum number of devices does not take into consideration the type of device or its protocol. For example, for the IN702MEB0100000 (license for 10 devices), you can connect three M-Bus energy meters + two liquid flow pulse meters + two Modbus RTU energy meters + two Modbus TCP EV chargers + one Modbus RTU inverter from the PV system.

An exception is pulse meters, which are limited to three by the hardware. This means that the maximum number of pulse meters in your project will always be three.

MAXIMUM NUMBER OF MODBUS SIGNALS

Limit	IN702MEB0100000	IN702MEB0200000	IN702MEB0600000	IN702MEB1000000
Maximum number of Modbus signals for each Modbus device	30	30	30	30
Maximum number of Modbus signals in total for each license	100	250	600	1200

NOTE
These limits only apply to Modbus devices, i.e., to Modbus TCP meters, Modbus RTU meters, Modbus TCP devices other than meters, and Modbus RTU devices other than meters.

MAXIMUM NUMBER OF SIGNALS

IN702MEB0100000	IN702MEB0200000	IN702MEB0600000	IN702MEB1000000
3,000	3,000	3,000	3,000

NOTE
The maximum number of signals does not take into consideration the type of device or its protocol, i.e., these 3000 signals are to be shared among all the devices connected to the gateway.

IMPORTANT
The capacity of the gateway depends on which limitation is reached first.

For example, the license for 10 devices is also limited to 100 Modbus signals; if you connect seven Modbus devices, and together they add up to 100 signals, you cannot connect another Modbus device.

TYPE OF ELEMENTS SUPPORTED

The type of elements supported is not dependent on the license, i.e., each license supports the same type of elements, as described in the following table:

Protocol	IN702MEB0100000	IN702MEB0200000	IN702MEB0600000	IN702MEB1000000
Modbus TCP	Modbus TCP devices/meters			
Modbus RTU	Modbus RTU devices/meters			
M-Bus	M-Bus meters			
Digital pulse	Pulse meters			

NOTE
All these types of elements can coexist at the same time in the gateway.

NOTICE
In practical terms, these installations could coexist on the server side at the same time:

- Modbus TCP and RTU devices.
- M-Bus meters.
- Digital pulse meters.

5. Quick Start Guide

IMPORTANT
While the following procedure outlines the fundamental steps for installing, wiring, and configuring the gateway, it is crucial to thoroughly review all documentation to prevent errors.

1. Install Intesis MAPS on your laptop. Use the setup program supplied and follow the instructions given by the installation wizard.
2. Mount the gateway at the desired installation site. The gateway can be mounted on a DIN rail or on a wall. Mounting the gateway on a DIN rail inside a metallic industrial cabinet grounded to earth is recommended. See Mounting (page 10).
3. Disconnect all systems from power before wiring the gateway.
4. Connect the BMS communication wires to the gateway. See Gateway Connectors (page 12).
   a. If using Modbus TCP or BACnet/IP, connect the communication cable coming from the Modbus/BACnet network to the port marked as **Ethernet Port** on the gateway.
   b. If using Modbus RTU or BACnet MS/TP, connect the communication cables coming from the Modbus/BACnet network to the port marked as **EIA 485** on the gateway.
   c. If using KNX-TP, connect the communication cables coming from the KNX network to the port marked as **KNX** on the gateway.
5. Connect the server network wires to the gateway. See Connection of the Devices/Meters (page 16).
   a. If using Modbus TCP, connect the communication cable coming from the Modbus server network to the port marked as **Ethernet Port** on the gateway.
   b. If using Modbus RTU, connect the communication cables coming from the Modbus server network to the port marked as **Modbus Devices** on the gateway.
   c. If using M-Bus, connect the communication cables coming from the M-Bus meters network to the port marked as **M-Bus** on the gateway.
   d. If using pulse meters, connect each pulse meter to the port marked as **Digital Inputs** on the gateway.
6. Power the gateway. Voltage: 24 VDC ±10%. Power: 17 W. Observe the polarity. See Connection to the Power Supply (page 18).
7. Connect the gateway to your laptop to configure it with Intesis MAPS. See Connection to a Computer for Configuration (page 18).
   a. If you want to connect via USB, connect a USB cable from the laptop to the port marked as **USB C** on the gateway.
   b. If you want to connect via IP, connect the Ethernet cable from the laptop to the port marked as **Ethernet Port** on the gateway.
8. Open Intesis MAPS and create a new project selecting the needed project template. Consult the Intesis MAPS Guide for IN702MEB∗∗∗0000.
9. Modify the configuration as needed, save it, and send the configuration file to the gateway.
10. Go to the **Diagnostic** tab and check the communication activity between the gateway, the BMS, and the server systems. If there is no communication activity, check that all systems are operative, the wiring of all devices is right, and the configuration of the gateway is correct.

6. Hardware

6.1. Mounting

IMPORTANT
Before mounting, please ensure that the chosen installation place preserves the gateway from direct solar radiation, water, high relative humidity, or dust.

NOTE
Mount the gateway on a wall or over a DIN rail. We recommend the DIN rail mounting option, preferably inside a grounded metallic industrial cabinet.

IMPORTANT
Ensure the gateway has sufficient clearances for all connections when mounted. See Dimensions (page 23).

DIN RAIL MOUNTING

1. Fit the gateway's top-side clips in the upper edge of the DIN rail.
2. Press the low side of the gateway gently to lock it in the DIN rail.
3. Make sure the gateway is firmly fixed.

NOTE
For some DIN rails, to complete step 2, you may need a small screwdriver or similar to pull the bottom clip down.

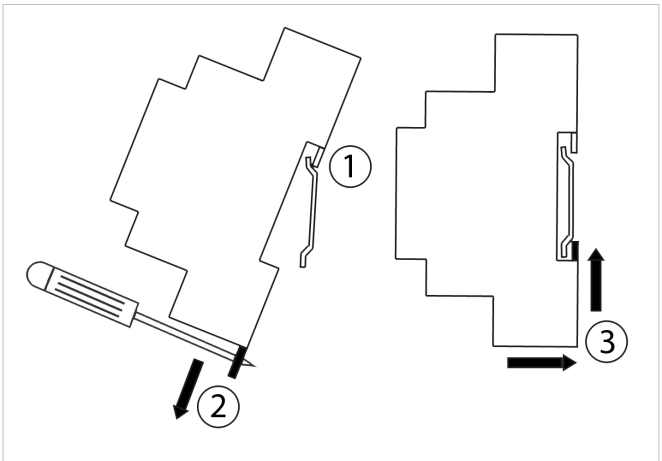

WALL MOUNTING

IMPORTANT
For reasons of security, the maximum height for wall mounting is two meters (6.5 feet).

1. Press the top-side mobile clips in the rear panel until you hear a *click*.

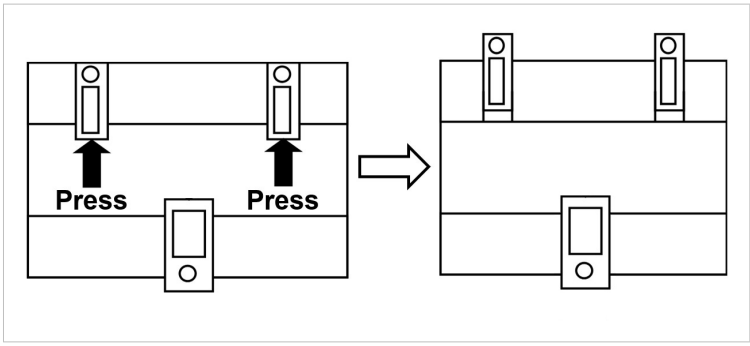

2. Use the clip holes to fix the gateway on the wall using screws.

NOTE
Use M3 screws, 25 mm (1") length.

3. Make sure the gateway is firmly fixed.

6.2. Connection

CAUTION
Disconnect all systems from power before manipulating and connecting them to the gateway.

IMPORTANT
Keep communication cables away from power and ground wires.

NOTE
Mount the gateway in the desired place before wiring it.

6.2.1. Gateway Connectors

Figure 4. Wiring diagram

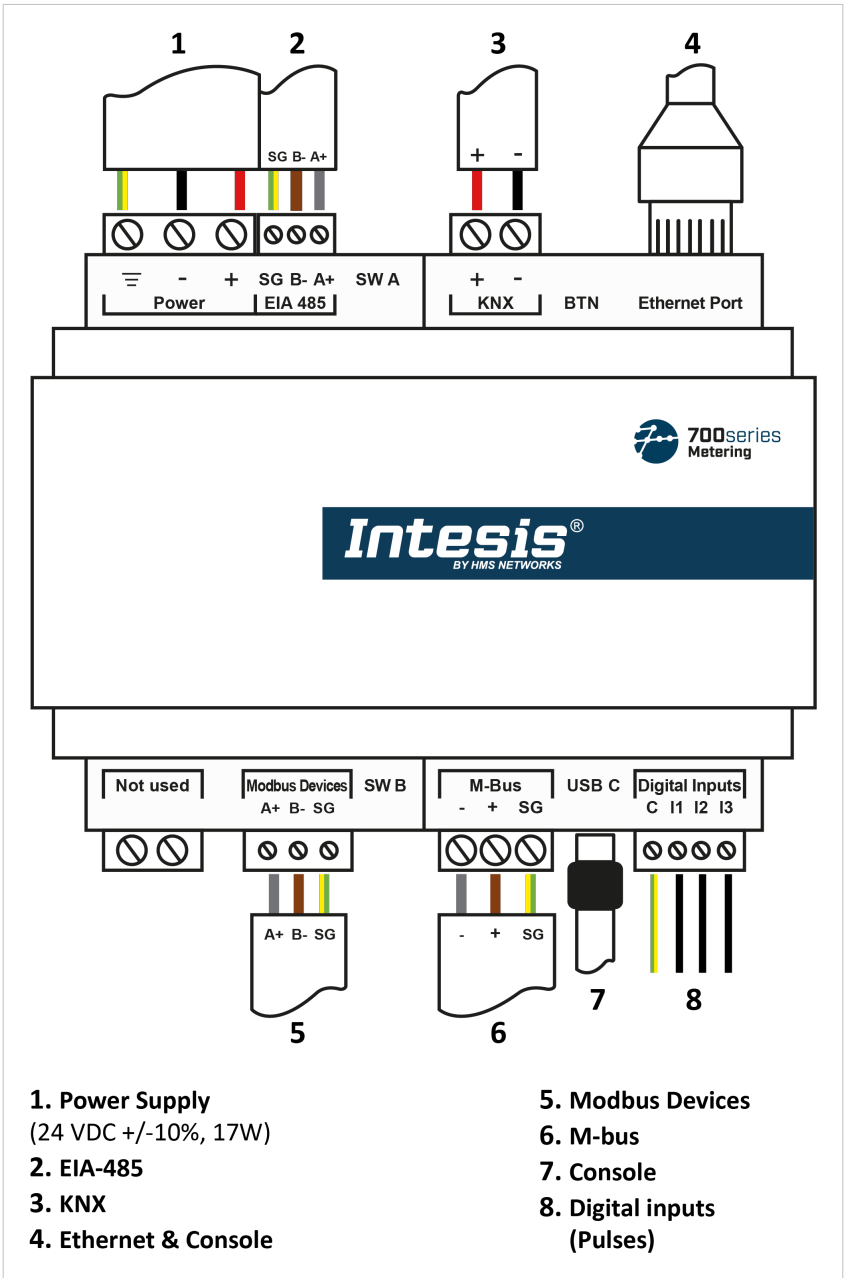

WIRING THE CONNECTORS

> **IMPORTANT**
> For all connectors, use solid or stranded wires (twisted or with ferrule).

Cross-section/gauge per terminal:

- One core: 0.2 .. 2.5 mm^2 / 24 .. 11 AWG
- Two cores: 0.2 .. 1.5 mm^2 / 24 .. 15 AWG
- Three cores: Not permitted

NOTE
To know more about each port's specifications, see Technical Specifications (page 22).

TIP
Terminal block connectors can be unplugged to facilitate the wiring process.

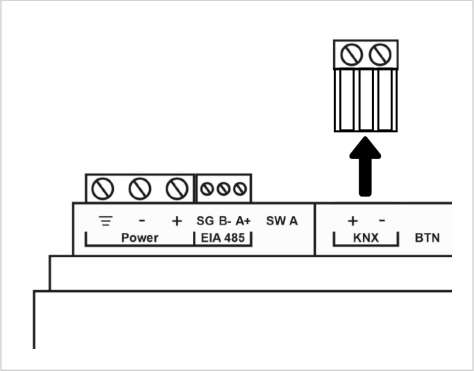

COMMUNICATION PORTS

PORT	USAGE	WIRING			
EIA-485	Modbus RTU and BACnet MS/TP	**SG**: Signal ground	**B-**	**A+**	
KNX	KNX bus	**+**		**-**	
Ethernet	**As an IP/TCP port**: Modbus TCP and BACnet/IP **As a console port**: Connection to a PC for configuration purposes	Ethernet cable (CAT5 or higher) When using the building LAN, contact the network administrator and make sure traffic is allowed. When starting up the gateway for the first time, DHCP will be enabled for 30 seconds. After that time, the default IP 192.168.100.246 will be set.			
Not used	*Not used*				
Modbus Devices	Modbus RTU	**A+**	**B-**	**SG**: Signal ground	
M-Bus	M-BUs	**-**	**+**	**SG**: Signal ground	
USB C	Connection to a PC for configuration purposes	USB Type-C			
Digital Inputs	Dry contact for pulse meters	**C**: Common	**I1**: Input 1	**I2**: Input 2	**I3**: Input 3

POWER SUPPLY CONNECTOR

The power supply connector is a green pluggable terminal block (three poles) labeled as **Power**.

IMPORTANT
Consult all the power supply specifications in Connection to the Power Supply (page 18).

6.2.2. Connection of the BMS Communication Bus

6.2.2.1. Connection to Modbus

FOR MODBUS TCP

Connect the Modbus TCP Ethernet cable to the gateway's **Ethernet Port**. The correct cable to use depends on where the gateway is connected:

- **Connecting directly to a Modbus TCP device:** use a crossover Ethernet UTP/FTP CAT5 or higher cable.
- **Connecting to a hub or switch of the LAN of the building:** use a straight Ethernet UTP/FTP CAT5 or higher cable.

NOTE
When commissioning the gateway for the first time, DHCP will be enabled for 30 seconds. During that time, if there is a DHCP server, an IP address will be automatically assigned to the gateway. After that time, the default IP address 192.168.100.246 will be automatically set.

IMPORTANT
If communicating through the LAN of the building, contact the network administrator and make sure traffic on the used port is allowed through all LAN paths.

FOR MODBUS RTU

Connect the Modbus RTU communication cable to the gateway's **EIA-485** port.

The connector for the EIA-485 bus is a green pluggable terminal block labeled **SG** (signal ground), **B-**, and **A+**.

IMPORTANT
Observe polarity.

IMPORTANT
Observe the standard restrictions of the EIA-485 bus:

- Maximum distance of 1200 meters (0.75 miles).
- Maximum of 32 devices connected to the bus.
- A 120 ohms (Ω) termination resistor is needed at each end of the bus. The gateway has an internal bus biasing circuit incorporating the termination resistor. It can be enabled using the DIP switch block (**SW A**) dedicated to the **EIA-485** port:
  Position 1
  - ON: 120 Ω termination active.
  - OFF: 120 Ω termination inactive (default position).

  Positions 2 and 3
  - ON: Polarization active (default position).
  - OFF: Polarization inactive.

  For further details, see DIP Switches (page 20).

To know more, refer to the document Polarity Issues in RS485 Networks.

IMPORTANT
When installing the gateway at the end of the bus with the termination resistor enabled, do not install an additional termination resistor at that end.

NOTE
See the Disposition of hardware elements in the gateway (page 19).

6.2.2.2. Connection to KNX

Connect the KNX TP communication cable to the gateway's **KNX** port.

IMPORTANT
Observe polarity.

NOTE
See the Disposition of hardware elements in the gateway (page 19).

6.2.2.3. Connection to BACnet

FOR BACNET/IP

Connect the BACnet/IP Ethernet cable to the gateway's **Ethernet Port**. The correct cable to use depends on where the gateway is connected:

- **Connecting directly to a BACnet/IP device:** use a crossover Ethernet UTP/FTP CAT5 or higher cable.
- **Connecting to a hub or switch of the LAN of the building:** use a straight Ethernet UTP/FTP CAT5 or higher cable.

NOTE
When commissioning the gateway for the first time, DHCP will be enabled for 30 seconds. During that time, if there is a DHCP server, an IP address will be automatically assigned to the gateway. After that time, the default IP address 192.168.100.246 will be automatically set.

IMPORTANT
If communicating through the LAN of the building, contact the network administrator and make sure traffic on the used port is allowed through all LAN paths.

FOR BACNET MS/TP

Connect the BACnet MS/TP communication cable to the gateway's **EIA-485** port.

The connector for the EIA-485 bus is a green pluggable terminal block labeled **SG** (signal ground), **B-**, and **A+**.

IMPORTANT
Observe polarity.

IMPORTANT
Observe the standard restrictions of the EIA-485 bus:

- Maximum distance of 1200 meters (0.75 miles).
- Maximum of 32 devices connected to the bus.
- A 120 ohms (Ω) termination resistor is needed at each end of the bus. The gateway has an internal bus biasing circuit incorporating the termination resistor. It can be enabled using the DIP switch block (**SW A**) dedicated to the **EIA-485** port:
  Position 1
  - ON: 120 Ω termination active.
  - OFF: 120 Ω termination inactive (default position).

  Positions 2 and 3
  - ON: Polarization active (default position).
  - OFF: Polarization inactive.

  For further details, see DIP Switches (page 20).

To know more, refer to the document Polarity Issues in RS485 Networks.

IMPORTANT
When installing the gateway at the end of the bus with the termination resistor enabled, do not install an additional termination resistor at that end.

NOTE
See the Disposition of hardware elements in the gateway (page 19).

6.2.3. Connection of the Devices/Meters

6.2.3.1. Modbus Devices/Meters

FOR MODBUS TCP

Connect the Modbus TCP Ethernet cable from the Modbus devices/meters network to the gateway's **Ethernet Port**. The correct cable to use depends on where the network is connected:

- **Connecting directly to the gateway:** Use a crossover Ethernet UTP/FTP CAT5 or higher cable.
- **Connecting to a hub or switch of the LAN of the building:** Use a straight Ethernet UTP/FTP CAT5 or higher cable.

FOR MODBUS RTU

Connect the Modbus RTU bus from the Modbus devices/meters network to the gateway's **Modbus Devices** port.

The connector for the Modbus devices/meters bus is a green pluggable terminal block labeled **A+**, **B-**, and **SG** (Signal ground).

IMPORTANT
Observe polarity.

The **Modbus Devices** port is an EIA 485 port.

IMPORTANT
Observe the standard restrictions of the EIA-485 bus:

- Maximum distance of 1200 meters (0.75 miles).
- Maximum of 32 devices connected to the bus.
- A 120 ohms (Ω) termination resistor is needed at each end of the bus. The gateway has an internal bus biasing circuit incorporating the termination resistor. It can be enabled using the DIP switch block (**SW A**) dedicated to the **Modbus Devices** port:
  Position 1
  - ON: 120 Ω termination active.
  - OFF: 120 Ω termination inactive (default position).

  Positions 2 and 3
  - ON: Polarization active (default position).
  - OFF: Polarization inactive.

  For further details, see DIP Switches (page 20).

To know more, refer to the document Polarity Issues in RS485 Networks.

NOTE
See the Disposition of hardware elements in the gateway (page 19).

6.2.3.2. M-Bus Meters

Connect the M-Bus bus to the gateway's **M-Bus** port.

The connector for the M-Bus bus is a green pluggable terminal block labeled **-**, **+**, and **SG** (Signal ground).

IMPORTANT
Observe polarity.

NOTE
See the Disposition of hardware elements in the gateway (page 19).

6.2.3.3. Pulse Meters

Connect each pulse meter to the gateway's **Digital Inputs** port.

IMPORTANT
The **Digital Inputs** port is a potential-free contact for energy metering only. It does not support any other kind of third-party elements.

The connector for the Digital Inputs port is a green pluggable terminal block labeled **C**, **I1**, **I2**, and **I3**.

IMPORTANT
Use the **C** terminal as the return path for the common connection. Each **I** terminal (**I1**, **I2**, and **I3**) is the specific input for one pulse meter.

NOTE
See the Disposition of hardware elements in the gateway (page 19).

6.2.4. Connection to the Power Supply

The power supply connector is a green pluggable terminal block (three poles) labeled as **Power**.

Apply the voltage within the admitted range and of enough power: 24 VDC (±10%), 17 W

IMPORTANT
Use a SELV-rated NEC class 2 or limited power source (LPS) power supply.

IMPORTANT
Use a circuit breaker between the gateway and the power supply. Rating: 250 V, 6 A.

IMPORTANT
Respect the polarity labeled on the power connector for the positive and negative wires.

MANDATORY GROUND CONNECTION

YOU MUST connect the gateway to the installation ground terminal. Always use the gateway's dedicated connector ⏚

NEVER use the positive or negative gateway's connectors to establish this connection. Not following this indication can cause ground loops and damage the gateway and/or any other equipment connected to it.

If the power supply includes a ground connection, that terminal must be connected to ground.

NOTE
See the Disposition of hardware elements in the gateway (page 19).

6.2.5. Connection to a Computer for Configuration

Use a USB Type-C cable (not supplied) to connect the gateway through its **USB C** port to a computer to configure it with Intesis MAPS.

NOTE
You can use the **Ethernet Port** to connect the gateway and the computer instead.

NOTE
To know more about the gateway configuration, consult the Intesis MAPS guide for IN702MEB∗∗∗0000.

NOTE
See the Disposition of hardware elements in the gateway (page 19).

6.3. Gateway Layout

Figure 5. Disposition of hardware elements in the gateway

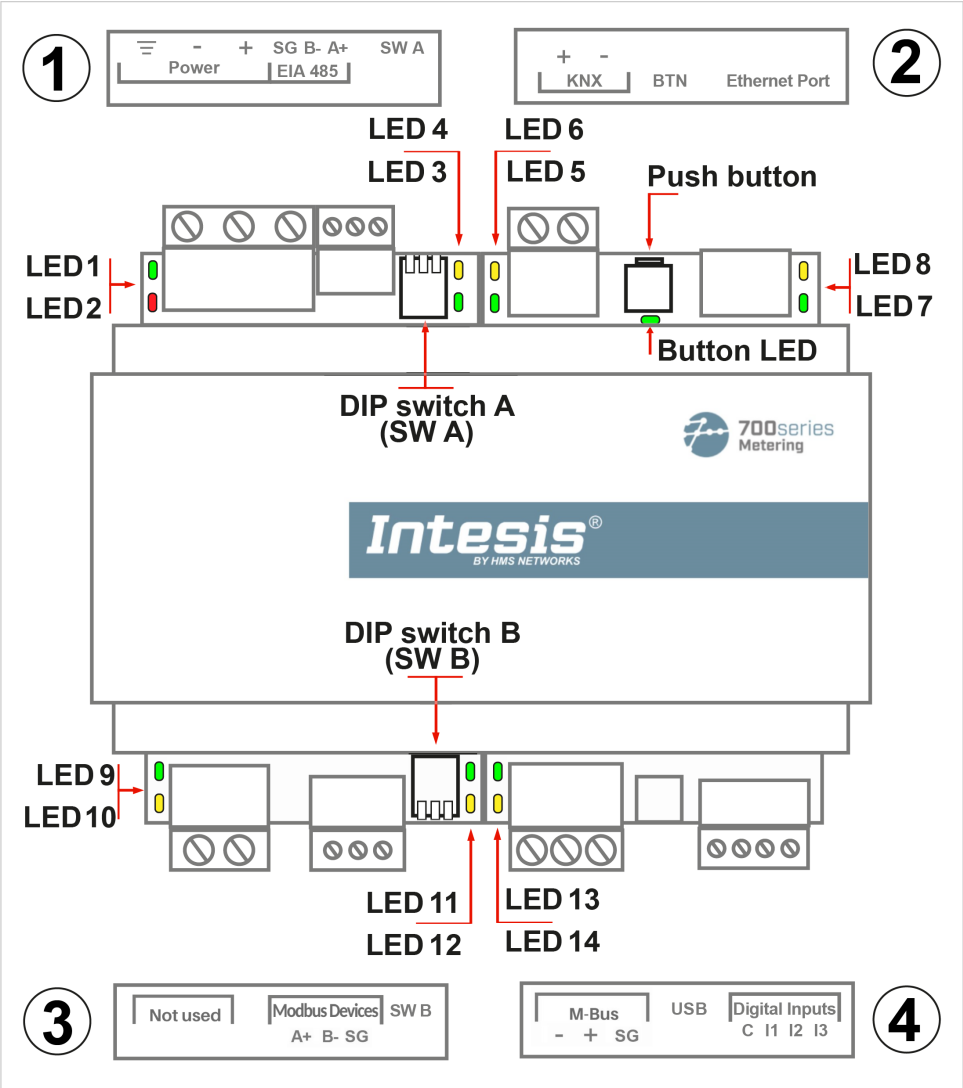

Plastic covers numbered in the image as ①, ②, ③, and ④ can be easily disassembled.

NOTE
LEDs and DIP switches are hidden behind the removable plastic covers and can only be accessed by disassembling the covers.

The following sections explain each element in more detail: LEDs, DIP switches, and the push button.

6.4. LED Indicators

Table 1. LEDs location and behavior

Cover	LED	Color	Description
Top side			
Under frontal cover ①	LED 1 (PWR)	Green	Power on (not programmable)
	LED 2 (ERR)	Red	Blinking: Hardware error
	LED 3	Green	485 Tx (RS485 for BACnet or Modbus)
	LED 4	Yellow	485 Rx (RS485 for BACnet or Modbus)
Under frontal cover ②	LED 5	Green	KNX Port Tx
	LED 6	Yellow	KNX Port Rx
	BUTTON LED	Green	**KNX**: Programming mode on **BACnet**: BACnet link established **Modbus**: Not used
	LED 7	Green	Ethernet link established
	LED 8	Yellow	Ethernet speed
Bottom side			
Under frontal cover ③	LED 9	Green	Not used
	LED 10	Yellow	Not used
	LED 11	Green	485 Tx (RS485 for Modbus)
	LED 12	Yellow	485 Rx (RS485 for Modbus)
Under frontal cover ④	LED 13	Green	M-Bus Tx
	LED 14	Yellow	M-Bus Rx

NOTICE
Another internal LED (green) indicates the "keep alive" status of the gateway by flashing every so often. This LED is only visible if the central frontal cover is removed. This LED is not indicated in the previous layout image.

6.5. DIP Switches

The gateway has two DIP switches (see the figure Disposition of hardware elements in the gateway (page 19)):

- DIP switch A (SW A)
- DIP switch B (SW B)

Each DIP switch is dedicated to a 485 port, and its function is to activate or deactivate the termination resistor (position 1) and the polarization (positions 2 and 3) of each port.

Position			Description
1	2	3	
ON	X	X	120 Ω termination active
OFF	X	X	120 Ω termination inactive (default position)
X	ON	ON	Polarization active (default position)
X	OFF	OFF	Polarization inactive

IMPORTANT
Observe the **ON** indicator on the DIP switch as a reference.

6.6. Push Button

Find the push button at the top side, between the KNX and the Ethernet connectors (see the figure Disposition of hardware elements in the gateway (page 19)).

NOTE
The button is hidden and only accessible using a thin object like a paper clip.

Common functionality:

RESET FACTORY SETTINGS

1. Push the button.
2. Power on the gateway.
3. Wait four seconds.
4. Release the button.

Functionalities depending on the current project:

- **BACnet**: Push the button to send an I-Am message to all BACnet ports.
- **KNX**: Push the button to switch between normal mode and programming mode.

6.7. Technical Specifications

Housing	Plastic, type PC (UL 94 V-0). Color: Light Grey. RAL 7035 Net dimensions (HxWxD): Millimeters: 90 x 106 x 58 mm / Inches: 3.5 x 4.2 x 2.3"	
Mounting	Wall: M3 25 mm (1") length screws. Secure mounting: below 2 meters (6 feet) DIN rail (recommended mounting) EN60715 TH35	
Wires (for power supply and low-voltage signals)	Per terminal: solid wires or stranded wires (twisted or with ferrule) Wire cross-section/gauge: One core: 0.2 .. 2.5 mm^2 (24 .. 14 AWG) Two cores: 0.2 .. 1.5 mm^2 (24 .. 16 AWG) Three cores: Not permitted For distances longer than 3.05 meters (10 feet), use class 2 cables	
Power	1 x Green pluggable terminal block 24 VDC (±10%), 17 W Three poles: ⏚: Connection to ground, **-**: Negative, **+**: Positive	
EIA-485 port	1 x Green pluggable terminal block Three poles: **SG**: Reference ground or shield, **B-**: Negative, **A+**: Positive	
KNX port	1 x Orange pluggable terminal block Two poles: **+**: Positive, **-**: Negative	
Ethernet port	1 x Ethernet 10/100 Mbps RJ45	
Not used port	1 x Green pluggable terminal block (two poles). Not used	
Modbus Devices port EIA-485	1 x Green pluggable terminal block Three poles: **A+**: Positive, **B-**: Negative, **SG**: Reference ground or shield	
M-Bus port	1 x Green pluggable terminal block Three poles: **-**: Negative, **+**: Positive, **SG**: Reference ground or shield	
Binary inputs	1 x Green pluggable terminal block Four poles: **I1**: Input 1, **I2**: Input 2, **I3**: Input 3, **C**: Common	
Console port (USB)	USB Type-C compliant	
LEDs	2 x Run (Power/Error) 2 x Port EIA-485 TX/RX 2 x Port KNX TX/TR 1 x Button indicator	2 x Ethernet Link/Speed 2 x Port A TX/RX (not used) 2 x Port B TX/RX 2 x Port C TX/RX
DIP switches	2 x DIP switch blocks for EIA-485 serial port configuration **SW A** Position 1: On: 120 Ω termination active Off: 120 Ω termination inactive (default) Position 2 and 3: On: Polarization active (default) Off: Polarization inactive **SW B** Position 1: On: 120 Ω termination active Off: 120 Ω termination inactive (default) Position 2 and 3: On: Polarization active (default) Off: Polarization inactive	
Button	1 x Push button Factory reset I-Am message (for BACnet only) Normal mode/programming mode (for KNX only)	
Operational temperature	Celsius: -10 .. 60°C Fahrenheit: 14 .. 140°F	
Operational humidity	5 to 95%. No condensation	
Protection	IP20 (IEC60529)	
Isolation voltage between comm. ports	1000 VDC	

6.8. Dimensions

IMPORTANT
Leave enough clear space to wire the gateway easily and for the subsequent manipulation of elements, such as connectors, DIP switches, etc.

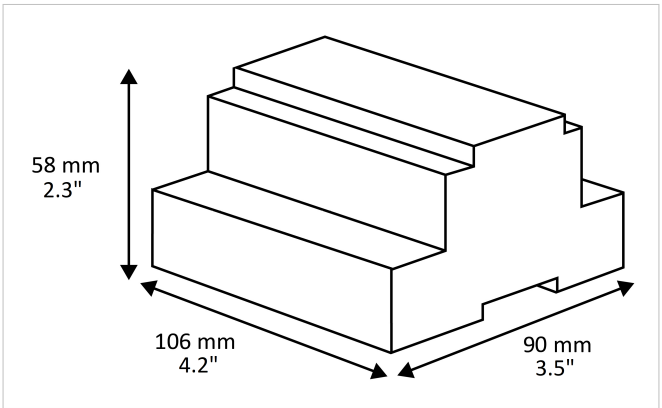

7. Available Protocol Combinations

For the BMS/control side, you can configure this gateway for Modbus TCP, Modbus RTU, KNX TP, BACnet/IP, and BACnet MS/TP.

The following sections list all the Modbus registers, KNX communication objects, and BACnet objects supported by the gateway.

7.1. Integration into Modbus Systems

7.1.1. Modbus Registers

Table 2. Global signals

Register	Address	Format	# bits	Possible values	Read/Write
General Comm. Error	0	-	1	0: No device has comm. error 1: At least one device has comm. error	0: Read
Force Bus Reading	1	-	1	0: No general polling pending to start 1: Polling of all meters pending to start	1: Trigger[1]
Activate Continuous Polling	2	-	1	0: No polling unless it has been triggered by user 1: Polling for all devices is periodic	2: Read/Write
Bus Activity	3	0: Unsigned	16	0: No Tx or Rx is pending with any meter 1: Polling in process	0: Read
Gateway timestamp	4	0: Unsigned	**64**/32*	Gateway date time in epoch time format	0: Read

NOTE
[1] Trigger: Read/Write register that can be written, but its value will return to the default status after being transmitted.

NOTE
* Signals with two listed data lengths (**# bits**) can be configured with Intesis MAPS to use any of them. The bolded type is the default value.

Table 3. Default signals per meter

Register (x = 0 .. 9 / 99)	Format	# bits	Possible values	Read/Write
Comm. Error Device x (Applies to meter with “Meter Index”)	-	1	0: Comm. error (No response after polling) 1: No comm. error	0: Read
Force reading Device x (Polling request by user for meter with “Meter Index”)	-	1	0: No polling trigger pending 1: Pending to start polling	2: Read/Write
Timestamp Device X	0: Unsigned	**64**/32*	Time since the last reading of the meter in epoch time format	0: Read
Serial number Device x	0: Unsigned	**64**/32*	Device's serial number	0: Read
Status M-Bus Device x[2]	0: Unsigned	16	See **Status M-Bus Device x Bitfields** table below	0: Read
NOTE [2]When configuring the gateway with Intesis MAPS, you can decide how to check the status of the M-Bus meter, either through this unique signal that groups five different statuses or through the five different signals listed next, each dedicated to one error or status signal:				
Application error Device x	0: Unsigned	16	0: No error 1: Application busy 2: Any application error 3: Abnormal condition/alarm	0: Read
Power low Device x	-	16	0: Device x power is OK 1: Device x power is low	0: Read
Permanent error Device x	-	16	0: No permanent error in device x 1: Permanent error in device x	0: Read

Register (x = 0 .. 9 / 99)	Format	# bits	Possible values	Read/Write
Temporary error Device x	-	16	0: No temporary error in device x 1: Device x has recovered from a temporary error	0: Read
Manufacturer error Device x	0: Unsigned	16	Manufacturer-specific error[3]	0: Read

NOTICE
[3] For more information about manufacturer-specific errors, consult the manufacturer's documentation.

NOTE
[*] Signals with two listed data lengths (**# bits**) can be configured with Intesis MAPS to use any of them. The bolded type is the default value.

Table 4. Status M-Bus Device x Bitfields

Bit	Bit value	Meaning
0, 1: Application Error	00	No error
	01	Application busy
	10	Any application error
	11	Abnormal condition/Alarm
2: Power Low	0	OK power
	1	Low power
3: Permanent Error	0	No permanent error
	1	Permanent error
4: Temporary Error	0	No temporary error
	1	Temporary error
5 .. 7: Manufacturer Specific Error	000 .. 111	Manufacturer Specific Error
8 .. 15: Not used	-	-

7.2. Integration into KNX Systems

NOTICE
Communication objects flags:

- **R**: The KNX system can read this signal.
- **W**: The KNX system can write this signal.
- **T**: The KNX system receives a telegram when this signal changes its value.
- **U**: This signal's data is updated after a reboot of either the gateway or the bus.

7.2.1. KNX Communication Objects

Table 5. Global signals

Communication object	Group address	DPT type	Possible values	Flags
General Comm. Error	4/0/0	1.005 alarm	0: No device has comm. error 1: At least one device has comm. error	T/R
Force Bus Reading	4/0/1	1.010 start/stop	0: No general polling pending to start 1: Polling of all meters pending to start	U/T/W/R
Activate Continuous Polling	4/0/2	1.003 enable	0: No polling unless it has been triggered by user 1: Polling for all devices is periodic	T/W/R
Bus Activity	4/0/3	1.0011 state	0: No Tx or Rx is pending with any meter 1: Polling in process	T/R
Gateway timestamp	4/0/4	12.x 4 byte, unsigned value	Gateway date time in epoch time format	T/R

Table 6. Default signals per meter

Communication object (x = 0 .. 9 / 99)	Group address	DPT type	Possible values	Flags
Comm. Error Device x (Applies to meter with “Meter Index”)	4/0/5	1.005 alarm	0: Comm. error (No response after polling) 1: No comm. error	T/R
Force reading Device x (Polling request by user for meter with “Meter Index”)	4/0/6	1.010 start/stop	0: No polling trigger pending 1: Pending to start polling	2: Read/Write
Timestamp Device X	4/0/7	12.x 4 byte, unsigned value	Time since the last reading of the meter in epoch time format	T/R
Serial number Device x	4/0/8	DPT 29.xxx Optional DPT 12.001	Device's serial number	T/R
Status M-Bus Device x[1]	-	5.010 Counter Pulses	See **Status M-Bus Device x Bitfields** table below	T/R
NOTE [1] When configuring the gateway with Intesis MAPS, you can decide how to check the status of the M-Bus meter, either through this unique signal that groups five different statuses or through the five different signals listed next, each dedicated to one status:				
Application error Device x	4/0/9	5.010 Counter Pulses	0: No error 1: Application busy 2: Any application error 3: Abnormal condition/alarm	T/R
Power low Device x	4/0/10	1.005 alarm	0: Device x power is OK 1: Device x power is low	T/R
Permanent error Device x	4/0/11	1.005 alarm	0: No permanent error in device x 1: Permanent error in device x	T/R

Communication object (x = 0 .. 9 / 99)	Group address	DPT type	Possible values	Flags
Temporary error Device x	4/0/12	1.005 alarm	0: No temporary error in device x 1: Device x has recovered from a temporary error	T/R
Manufacturer error Device x	4/0/13	5.010 Counter Pulses	Manufacturer specific error	T/R

Table 7. Status M-Bus Device x Bitfields

Bit	Bit value	Meaning
0, 1: Application Error	00	No error
	01	Application busy
	10	Any application error
	11	Abnormal condition/Alarm
2: Power Low	0	OK power
	1	Low power
3: Permanent Error	0	No permanent error
	1	Permanent error
4: Temporary Error	0	No temporary error
	1	Temporary error
5 .. 7: Manufacturer Specific Error	000 .. 111	Manufacturer Specific Error
8 .. 15: Not used	-	-

7.3. Integration into BACnet Systems

NOTICE
You can consult the Protocol Implementation Conformance Statement (PICS) document here.

7.3.1. BACnet Objects

Table 8. Global signals

Object	Instance	Type	Possible values	Read/Write
General Comm. Error	0	Binary Input	0: No device has comm. error 1: At least one device has comm. error	R
Force Bus Reading	0	**Binary Value*** Analog Output Analog Value Binary Output Multi-state Output Multi-state Value	0: No general polling pending to start 1: Polling of all meters pending to start	R/W
Activate Continuous Polling	1	**Binary Value*** Analog Output Analog Value Binary Output Multi-state Output Multi-state Value	0: No polling unless it has been triggered by user 1: Polling for all devices is periodic	R/W
Bus Activity	1	Binary Input	0: No Tx or Rx is pending with any meter 1: Polling in process	R
Gateway timestamp	0	**Large Analog Value (Read only)*** / Analog Input	Gateway date time in epoch time format	R

NOTE
* Signals with multiple listed types can be configured with Intesis MAPS to use any of those types. The bolded type is the default value.

Table 9. Default signals per meter

Object (x = 0 .. 9 / 99)	Instance	Type	Possible values	Read/Write
Comm. Error Device x (Applies to meter with “Meter Index”)	2	Binary Input	0: Comm. error (No response after polling) 1: No comm. error	R
Force reading Device x (Polling request by user for meter with “Meter Index”)	2	Binary Value	0: No polling trigger pending 1: Pending to start polling	R/W
Timestamp Device X	1	**Large Analog Value (Read only)*** / Analog Input	Time since the last reading of the meter in epoch time format	R
Serial number Device x	2	**Large Analog Value (Read only)*** / Analog Input	Device's serial number	R
Status M-Bus Device x[1]	-	Analog Input	See **Status M-Bus Device x Bitfields** table below	R

NOTE
[1] When configuring the gateway with Intesis MAPS, you can decide how to check the status of the M-Bus meter, either through this unique signal that groups five different statuses or through the five different signals listed next, each dedicated to one status:

Object (x = 0 .. 9 / 99)	Instance	Type	Possible values	Read/Write
Application error Device x	0	Analog Input	0: No error 1: Application busy 2: Any application error 3: Abnormal condition/alarm	R
Power low Device x	3	Binary Input	0: Device x power is OK 1: Device x power is low	R
Permanent error Device x	4	Binary Input	0: No permanent error in device x 1: Permanent error in device x	R
Temporary error Device x	5	Binary Input	0: No temporary error in device x 1: Device x has recovered from a temporary error	R
Manufacturer error Device x	0	Analog Input	Manufacturer-specific error	R

NOTE

* Signals with multiple listed types can be configured with Intesis MAPS to use any of those types. The bolded type is the default value.

Table 10. Status M-Bus Device x Bitfields

Bit	Bit value	Meaning
0, 1: Application Error	00	No error
	01	Application busy
	10	Any application error
	11	Abnormal condition/Alarm
2: Power Low	0	OK power
	1	Low power
3: Permanent Error	0	No permanent error
	1	Permanent error
4: Temporary Error	0	No temporary error
	1	Temporary error
5 .. 7: Manufacturer Specific Error	000 .. 111	Manufacturer Specific Error
8 .. 15: Not used	-	-

8. Late Configuration: Change the Gateway's Protocol

Reconfiguring the gateway with a different protocol is very easy:

1. Connect the gateway to the computer and open the configuration tool Intesis MAPS.
2. Select the new template you need.
3. Click **Next** or double-click the template in the list.
4. A message will pop up, asking if you want to save the project currently loaded in the gateway.
5. Click **Yes** or **No**, depending on your needs.
6. Configure the needed parameters and signals for your new project.
7. Send the configuration to the gateway.

NOTE
To know more about the gateway configuration, consult the Intesis MAPS guide for IN702MEB∗∗∗0000.