ENGLISH

700series DALI Gateway - IN703DAL0640000

Intesis DALI-2 Protocol Translator with Serial and IP Support
1 DALI Channel

USER MANUAL
Version 1.0.11
Publication date 2026-01-28

14 rue Edouard Petit
42000 St-Etienne
Tel : +33 477 92 03 56
Email : contact@rg2i.com
www.rg2i.com

Copyright © 2023 Intesis

Disclaimer

The information in this document is for informational purposes only. Please inform HMS Networks of any inaccuracies or omissions found in this document. HMS Networks disclaims any responsibility or liability for any errors that may appear in this document.

HMS Networks reserves the right to modify its products in line with its policy of continuous product development. The information in this document shall therefore not be construed as a commitment on the part of HMS Networks and is subject to change without notice. HMS Networks makes no commitment to update or keep current the information in this document.

The data, examples and illustrations found in this document are included for illustrative purposes and are only intended to help improve understanding of the functionality and handling of the product. In view of the wide range of possible applications of the product, and because of the many variables and requirements associated with any particular implementation, HMS Networks cannot assume responsibility or liability for actual use based on the data, examples or illustrations included in this document nor for any damages incurred during installation of the product. Those responsible for the use of the product must acquire sufficient knowledge in order to ensure that the product is used correctly in their specific application and that the application meets all performance and safety requirements including any applicable laws, regulations, codes and standards. Further, HMS Networks will under no circumstances assume liability or responsibility for any problems that may arise as a result from the use of undocumented features or functional side effects found outside the documented scope of the product. The effects caused by any direct or indirect use of such aspects of the product are undefined and may include e.g. compatibility issues and stability issues.

Table of Contents

1. Description and Order Codes 1

2. General Information 2

2.1. Intended Use of the User Manual 2
2.2. General Safety Information 2
2.3. Admonition Messages and Symbols 3

3. Overview 4

3.1. Inside the Package 5
3.2. Main Features 5
3.3. General Functionality 6
3.4. Gateway Capacity 6
3.5. DALI Supported Device Types 7

4. Hardware 8

4.1. Mounting 8
4.2. Connection 9
4.2.1. Gateway Connectors 9
4.2.2. Connection Procedure for DALI 11
4.2.3. Connection to Modbus 12
4.2.4. Connection to BACnet 13
4.2.5. Connection to a Computer for Configuration 14
4.3. LED Indicators 15
4.4. DIP Switches 16
4.5. Buttons 16
4.5.1. Factory Reset 19
4.6. Technical Specifications 20
4.7. Dimensions 21

5. Available Protocol Combinations 22

5.1. DALI to BACnet/IP and MS/TP 22
5.1.1. BACnet Objects 22
5.1.1.1. All Ballasts (BACnet) 22
5.1.1.2. DALI Groups – All Ballasts (BACnet) 23
5.1.1.3. Broadcast – All Ballasts (BACnet) 24
5.1.1.4. Emergency Ballasts (Type 1) (BACnet) 24
5.1.1.5. LED Ballasts (Type 6) (BACnet) 26
5.1.1.6. Color Control (Type 8) (BACnet) 27
5.1.1.7. DALI Groups – Color Ballasts (Type 8) (BACnet) 28
5.1.1.8. Broadcast - Color Ballasts (Type 8) (BACnet) 28
5.1.1.9. Energy Reporting (Type 51) (BACnet) 28
5.1.1.10. Diagnostics and Maintenance (Type 52) (BACnet) 29
5.1.1.11. Area (BACnet) 30
5.1.1.12. Input Devices (BACnet) 30
5.2. DALI to Modbus TCP and RTU 32
5.2.1. Modbus Registers 32
5.2.1.1. All Ballasts (Modbus) 32
5.2.1.2. DALI Groups – All Ballasts (Modbus) 34
5.2.1.3. Broadcast – All Ballasts (Modbus) 35
5.2.1.4. Emergency Ballasts (Type 1) (Modbus) 36
5.2.1.5. LED Ballasts (Type 6) (Modbus) 38
5.2.1.6. Color Control (Type 8) (Modbus) 39
5.2.1.7. DALI Groups – Color Ballasts (Type 8) (Modbus) 40

5.2.1.8. Broadcast - Color Ballasts (Type 8) (Modbus) 41
5.2.1.9. Energy Reporting (Type 51) (Modbus) 41
5.2.1.10. Diagnostics and Maintenance (Type 52) (Modbus) 42
5.2.1.11. Area (Modbus) 43
5.2.1.12. Input Devices (Modbus) 44

6. Late Configuration: Change the Gateway's Protocol 46

1. Description and Order Codes

IN703DAL0640000 Gateway.

DALI-2 to Modbus TCP & RTU or BACnet/IP & MS/TP Server Application with 1 DALI Channel.

ORDER CODE	INTESIS MAPS TEMPLATE	APPLICATION
IN703DAL0640000	IN-MBS-DALI-64	Intesis DALI to Modbus Server Gateway
	IN-BAC-DALI-64	Intesis DALI to BACnet Server Gateway

LEGACY ORDER CODES
INBACDAL0640200 / INMBSDAL0640200

2. General Information

2.1. Intended Use of the User Manual

This manual contains the main features of this Intesis gateway and the instructions for its appropriate installation, configuration, and operation.

Any person who installs, configures, or operates this gateway or any associated equipment should be aware of this manual's contents.

Keep this manual for future reference during the installation, configuration, and operation.

2.2. General Safety Information

IMPORTANT
Follow these instructions carefully. Improper work may seriously harm your health and damage the gateway and/or any other equipment connected to it.

Only technical personnel, following these instructions and the country legislation for installing electrical equipment, can install and manipulate this gateway.

Install this gateway indoors, in a restricted access location, avoiding exposure to direct solar radiation, water, high relative humidity, or dust.

Preferably, mount this gateway on a DIN rail inside a grounded metallic cabinet, following the instructions in this manual.

If mounting on a wall, firmly fix this gateway on a non-vibrating surface, following the instructions in this manual.

Connect this gateway only to networks without routing to the outside plant.

All communication ports are considered for indoor use and must only be connected to SELV circuits.

Disconnect all systems from power before manipulating and connecting them to the gateway.

CAUTION
To avoid earth loops that can damage the gateway and/or any other equipment connected to it, we strongly recommend:

- The use of DC power supplies, floating or with the negative terminal connected to earth. **Never use a DC power supply with a positive terminal connected to earth**.
- The use of AC power supplies only if they are floating and not powering any other device.

Respect the expected polarity of power and communication cables when connecting them to the gateway.

CAUTION
Only an authorized installer can replace the battery. If the battery is replaced with an incorrect type, there is a risk of explosion. Dispose of used batteries according to local legislation.

These safety instructions in other languages can be found here.

2.3. Admonition Messages and Symbols

CAUTION
Instruction that must be followed to avoid a potentially hazardous situation that, if not avoided, could result in minor or moderate injury.

IMPORTANT
Instruction that must be followed to avoid a risk of reduced functionality and/or damage to the equipment or to avoid a network security risk.

NOTE
Additional information which may facilitate installation and/or operation.

TIP
Helpful advice and suggestions.

NOTICE
Remarkable Information.

3. Overview

Protocol combinations supported by the IN703DAL0640000 gateway:

Gateway's client interface	↔	Gateway's server interface
DALI	to	BACnet/IP and MS/TP
		Modbus TCP and RTU

IMPORTANT
This document assumes that the user is familiar with these technologies.

Figure 1. Integration of DALI devices into BACnet/IP or BACnet MS/TP installations

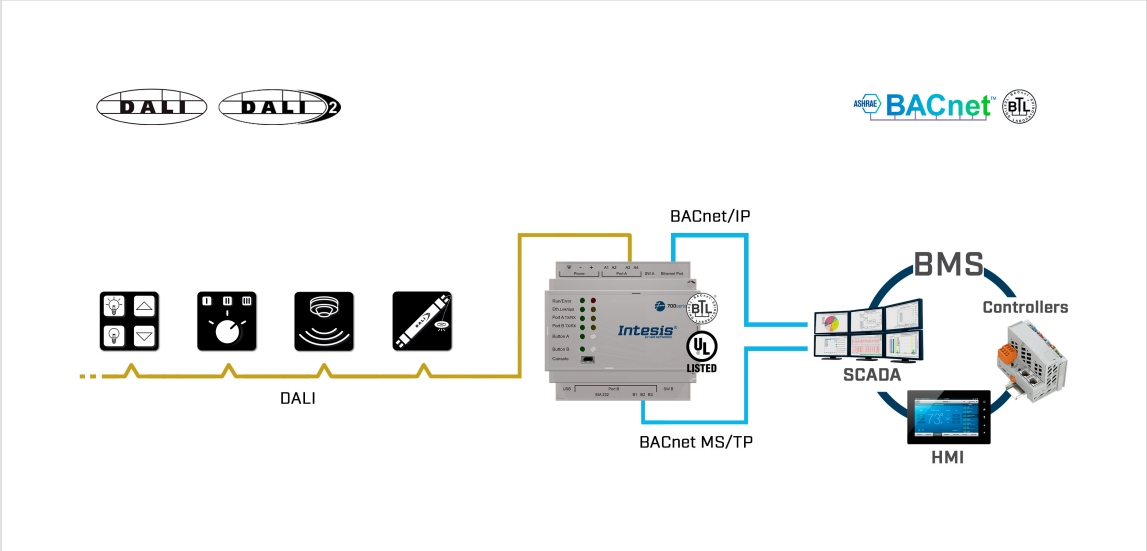

Figure 2. Integration of DALI devices into Modbus TCP or Modbus RTU installations

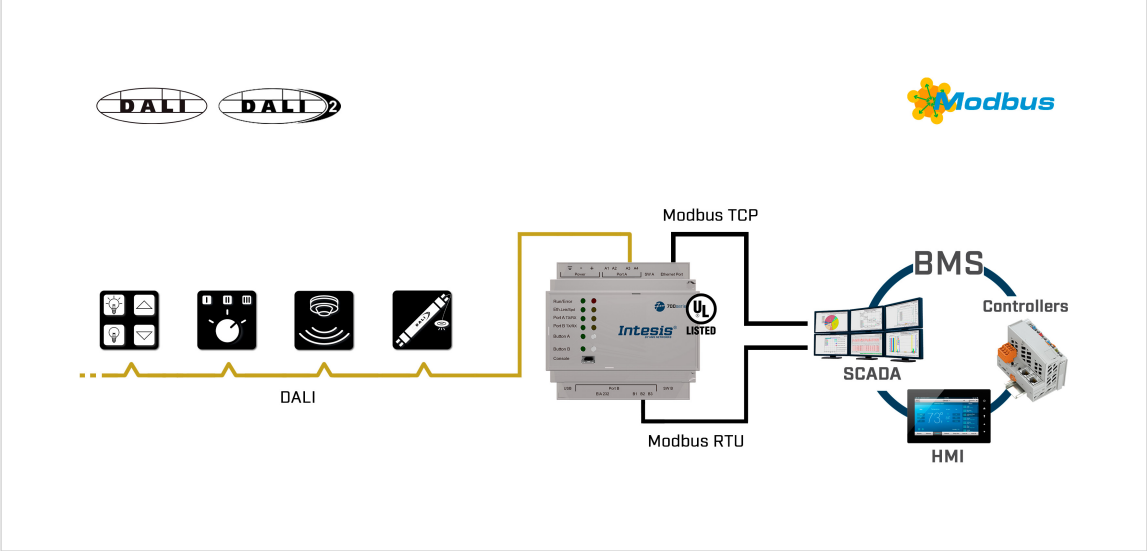

3.1. Inside the Package

ITEMS INCLUDED

- Intesis IN703DAL0640000 gateway
- USB Mini-B type to USB Type-A cable
- Installation Guide

3.2. Main Features

- DALI-2 certified
- UL certified
- BTL certified
- Two applications available: DALI to BACnet/IP or MS/TP and DALI to Modbus TCP or RTU
- New color control allows the BMS to control RGB channels and the tunable white function for human centric lighting (HCL)
- New DALI data feature allows the obtaining of energy and diagnostic data directly from the luminaire
- New DALI local control allows push buttons, absolute inputs, and occupancy and light sensor control from the gateway itself
- Bus Scan function: Reduce the commissioning time by discovering all the DALI devices connected to the network.
- BACnet advanced features available (calendars, schedules, trend logs, etc.)
- Multiple ports:
  - Pluggable terminal block for DALI (2 poles)
  - Ethernet
  - Pluggable terminal block for EIA-485 (3 poles)
  - DB9M for EIA-232
  - USB Type-A 2.0 port for flash drive
  - USB Mini-B type 2.0 port for connection to the PC
- DIN rail mounting housing
- 10000 signals of capacity
- DIP switches for termination and polarization configuration
- Configurable with Intesis user-friendly software tool (Intesis MAPS)
- 10 LED indicator matrix

3.3. General Functionality

This Intesis IN703DAL0640000 gateway enables data exchange between installations and devices based on the DALI protocol and control systems based on BACnet or Modbus.

To do so, the gateway is continuously aware of both sides: the control system (supervisor, BMS, client device, etc.) and the DALI installations or devices to be integrated. The gateway obtains updated readings for the points configured in it. With every read, the new values are updated in the gateway's memory and become available for the control system side. When a change in any point configured as output in the gateway is detected (that is, written from the control system side), the corresponding action in the DALI device is performed.

3.4. Gateway Capacity

Table 1. For DALI-2 to BACnet server

Supported elements	BACnet
Maximum number of independent DALI channels	1
Maximum number of DALI ECG addresses per line	64
Maximum number of DALI input devices per line	64[1]
Maximum number of instances per input device	10
Maximum number of signals per gateway	10000[2]
DALI guaranteed current	230 mA

Table 2. For DALI-2 to Modbus server

Supported elements	Modbus
Maximum number of independent DALI channels	1
Maximum number of DALI ECG addresses per line	64
Maximum number of DALI input devices per line	64[1]
Maximum number of instances per input device	10
Maximum number of simultaneous incoming sockets at Modbus TCP side	6
Maximum number of signals per gateway	10000[2]
DALI guaranteed current	230 mA

NOTE

[1] We recommend limiting this number to 16 when integrating push buttons. Realize that push buttons with several instances consume several signals.

The maximum number of DALI devices (ECGs and/or input devices) depends on the sum of the specific devices' current consumption. The gateway supplies 230 mA to the bus to power the DALI devices, so if each input device (sensor) in the bus consumes 5 mA, then we can connect 63 ECGs (the standard defines the maximum consumption allowed for these devices is 2 mA) and 16 sensors.

63 ECGs * 2 mA + 16 sensors * 5 mA = 206 mA < 230 mA * 90%

As the standard recommends, don’t use the guaranteed current to calculate the maximum number of DALI devices, but leave 10% of the current for future expansion or tolerances.

[2] This is the gateway's total number of signals regardless of whether they are ECGs, sensors, groups, etc.

3.5. DALI Supported Device Types

Name	Part	Device type
Fluorescent lamp	201	0
Self-contained emergency lighting	202	1
LED module	207	6
Color control	209	8
Energy data	252	51
Diagnostics and maintenance data	253	52

Consult all signals and their characteristics in Available Protocol Combinations (page 22).

4. Hardware

4.1. Mounting

IMPORTANT
Before mounting, please ensure that the chosen installation place preserves the gateway from direct solar radiation, water, high relative humidity, or dust.

IMPORTANT
Ensure the gateway has sufficient clearances for all connections when mounted. See Dimensions (page 21).

NOTE
Mount the gateway over a DIN rail, preferably inside a grounded metallic industrial cabinet.

1. Fit the gateway's top-side clips in the upper edge of the DIN rail.
2. Press the low side of the gateway gently to lock it in the DIN rail.
3. Make sure the gateway is firmly fixed.

NOTE
For some DIN rails, to complete step 2, you may need a small screwdriver or similar to pull the bottom clip down.

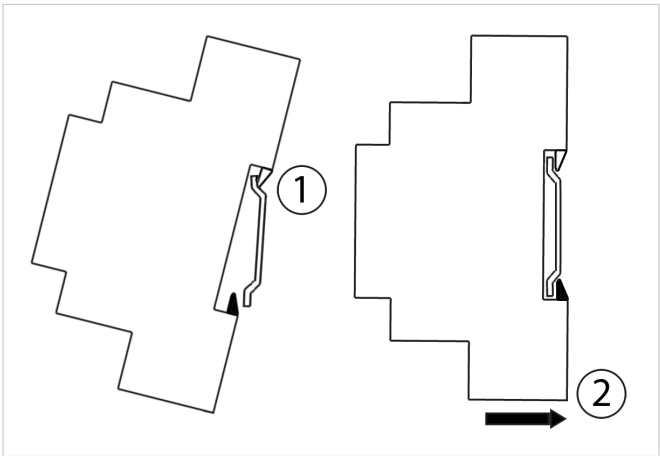

4.2. Connection

CAUTION
Disconnect all systems from power before manipulating and connecting them to the gateway.

IMPORTANT
Keep communication cables away from power and ground wires.

NOTE
Mount the gateway in the desired place before wiring it.

4.2.1. Gateway Connectors

Figure 3. Wiring diagram

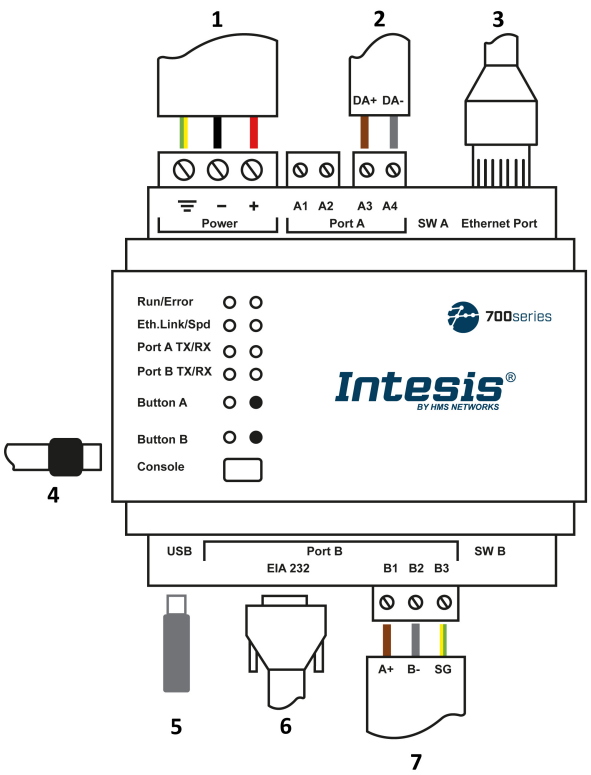

1. **Power Supply** (24 VDC / 6.5 W)
2. **DALI Channel A**
3. **Ethernet**
4. **Console Port**
   USB Mini-B type
5. **USB storage**
6. **Port B EIA-232**
7. **Port B EIA-485**

WIRING THE CONNECTORS

IMPORTANT
For all connectors, use solid or stranded wires (twisted or with ferrule).

Cross-section/gauge per terminal:

- One core: 0.2..2.5 mm^2 / 24..11 AWG
- Two cores: 0.2..1.5 mm^2 / 24..15 AWG
- Three cores: Not permitted

COMMUNICATION PORTS

PORT	USAGE	WIRING			
Port A	DALI bus	*A1: N/A*	*A2: N/A*	**A3**: DA+	**A4**: DA-
Ethernet	**As a TCP/IP port**: BACnet/IP and Modbus TCP **As a console port**: Connection to a computer for configuration purposes	Ethernet cable (CAT5 or higher)			
Port B EIA-485	BACnet MS/TP and Modbus RTU	**B1**: A+	**B2**: B-	**B3**: SG	
Port B EIA-232	Modbus RTU	DB9 connector Only lines RX, TX, and Ground (corresponding to pins 2, 3, and 5) are used			
Console	Connection to a computer for configuration purposes	USB Mini-B type			

USB PORT

USB Type-A 2.0 connector for saving logs into a USB flash drive.

IMPORTANT
This USB connector does not support HDD devices.

POWER SUPPLY

IMPORTANT
The gateway's power supply is disabled by default to prevent the risk of having two power supplies at the same time in the DALI bus.

You can enable/disable the power supply with Intesis MAPS (see the figure below). Take into account that this parameter is enabled by default.

If you are powering the bus with an external power supply, ensure to comply with the following:

- It is a DALI-2 standard power supply certified under the DiiA guidelines.
- Polarity in the DALI bus is the same for both the gateway and the external power supply.
- Be sure you are following the standard DALI guidelines for bus powering.

If the DALI bus is not powered, there will be no communication and an error will appear when testing the hardware.

Figure 4. Gateway's power supply enabling parameter

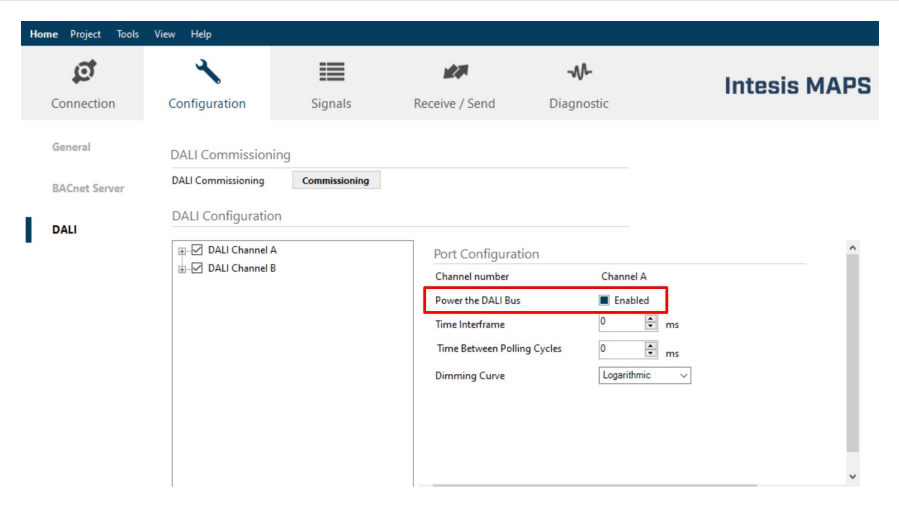

The gateway's power supply is enabled/disabled from the DALI Channel root in the tree view

NOTE
If you change the status of the **Power the DALI Bus** parameter, send the project to the gateway through the **Receive/Send** tab to apply the new status.

The power supply connector is a green pluggable terminal block (three poles) labeled as **Power**.

Apply the voltage within the admitted range and of enough power:

Power rating: 24 VDC (±10%), 6.5 W.

IMPORTANT
- Use SELV-rated NEC class 2 or limited power source (LPS) power supply.
- Observe polarity.
- Connect the gateway's ground terminal ⏚ to the installation grounding.

IMPORTANT
To avoid earth loops that can damage the gateway and/or any other equipment connected to it, we strongly recommend:

- The use of DC power supplies, floating or with the negative terminal connected to earth.
- The use of AC power supplies only if they are floating and not powering any other device.

CAUTION
Never use a DC power supply with a positive terminal connected to earth.

4.2.2. Connection Procedure for DALI

Connect the DALI channel to the gateway's **Port A** using its **A3** and **A4** terminal connectors.

4.2.3. Connection to Modbus

FOR MODBUS TCP

Connect the Modbus TCP Ethernet cable to the gateway's **Ethernet Port**.

NOTE
Some devices detect the difference automatically and adjust themselves.

NOTE
The gateway features a temporary DHCP mode that is enabled for 30 seconds when an Ethernet link is detected, provided the gateway still has its factory settings or has been factory reset. During this time, if the gateway is connected to a DHCP-enabled network, the server will assign it a dynamic IP address. If no DHCP server is available, the default IP address 192.168.100.246 will be automatically assigned after 30 seconds.

IMPORTANT
If communicating through the LAN of the building, contact the network administrator and make sure traffic on the used port is allowed through all LAN paths.

FOR MODBUS RTU

NOTE
You can use either **EIA-485** or **EIA-232 Port B** connectors for this kind of connection. See Wiring diagram (page 9).

USING THE EIA-485 CONNECTOR

Connect the Modbus RTU communication cable to the gateway's EIA-485 connector of **Port B**.

The connector for the EIA-485 bus is a green pluggable terminal block labeled **B1**, **B2**, and **B3**.

- **B1**: A+
- **B2**: B-
- **SG**: Signal ground

IMPORTANT
Observe polarity.

IMPORTANT
Observe the standard restrictions of the EIA-485 bus:

- Maximum distance of 1200 meters (0.75 miles).
- Maximum of 32 devices connected to the bus.
- A 120 ohms (Ω) termination resistor is needed at each end of the bus. The gateway has an internal bus biasing circuit incorporating the termination resistor. It can be enabled using the DIP switch block (**SW A**) dedicated to the **EIA-485** port:
  Position 1
  - ON: 120 Ω termination active.
  - OFF: 120 Ω termination inactive.

  Positions 2 and 3
  - ON: Polarization active.
  - OFF: Polarization inactive.

  For further details, see DIP Switches (page 16).

To know more, refer to the document Polarity Issues in RS485 Networks.

IMPORTANT
When installing the gateway at the end of the bus with the termination resistor enabled, do not install an additional termination resistor at that end.

USING THE EIA-232 CONNECTOR

Connect the Modbus RTU communication cable to the gateway's EIA-232 connector of **Port B**.

The connector for the EIA-232 bus is a DB9 male (DTE) connector.

NOTE
Only lines RX, TX, and Ground (corresponding to pins 2, 3, and 5) are used.

IMPORTANT
Respect the maximum distance of 15 meters.

4.2.4. Connection to BACnet

FOR BACNET/IP

Connect the BACnet/IP Ethernet cable to the gateway's **Ethernet Port**.

NOTE
The gateway features a temporary DHCP mode that is enabled for 30 seconds when an Ethernet link is detected, provided the gateway still has its factory settings or has been factory reset. During this time, if the gateway is connected to a DHCP-enabled network, the server will assign it a dynamic IP address. If no DHCP server is available, the default IP address **192.168.100.246** will be automatically assigned after 30 seconds.

IMPORTANT
If communicating through the LAN of the building, contact the network administrator and make sure traffic on the used port is allowed through all LAN paths.

FOR BACNET MS/TP

Connect the BACnet MS/TP communication cable to the gateway's EIA-485 connector of **Port B**.

The connector for the EIA-485 bus is a green pluggable terminal block labeled **B1**, **B2**, and **B3**.

- **B1**: A+
- **B2**: B-
- **SG**: Signal ground

IMPORTANT
Observe polarity.

IMPORTANT
Observe the standard restrictions of the EIA-485 bus:

- Maximum distance of 1200 meters (0.75 miles).
- Maximum of 32 devices connected to the bus.
- A 120 ohms (Ω) termination resistor is needed at each end of the bus. The gateway has an internal bus biasing circuit incorporating the termination resistor. It can be enabled using the DIP switch block (**SW A**) dedicated to the **EIA-485** port:
  Position 1
  - ON: 120 Ω termination active.
  - OFF: 120 Ω termination inactive.

  Positions 2 and 3
  - ON: Polarization active.
  - OFF: Polarization inactive.

  For further details, see DIP Switches (page 16).

To know more, refer to the document Polarity Issues in RS485 Networks.

IMPORTANT
When installing the gateway at the end of the bus with the termination resistor enabled, do not install an additional termination resistor at that end.

4.2.5. Connection to a Computer for Configuration

Use the supplied USB Mini-B type to USB Type-A cable to connect the gateway through its **USB** port to a computer to configure it with Intesis MAPS.

NOTE
You can use the **Ethernet Port** to connect the gateway and the computer instead.

NOTE
To know more about the gateway configuration, consult the Intesis MAPS Guide for IN703DAL0640000.

4.3. LED Indicators

On the front side, ten LEDs indicate the different status of the gateway:

LED	Color	Description
Run	Off	No power
	Green	The gateway is connected and running
Error	Off	No error
	Red	Error
Eth. Link	Off	No connection
	Green	Connection established
Eth. Spd	Off	No transmission
	Yellow	Transmitting data
Port A TX/RX	Off	No activity
	TX blinking green	Data packet transmitted to the DALI network
	RX blinking yellow	Data packet received from the DALI network
Port B TX/RX	Off	No activity
	TX blinking green	Data packet transmitted to the BACnet or Modbus network
	RX blinking yellow	Data packet received from the BACnet or Modbus network
LED for Button A	Red	This LED turns to steady red for 30 seconds when you press Button A
LED for Button B *For the DALI-2 to BACnet application only*	Green	Link with BACnet/IP established
	Off	Button B has been pressed

NOTE
*Both Button A and Button B LEDs blink alternatively when the gateway detects that a USB flash drive has been connected and it is ready to be used.

NOTE
The Console port (USB Mini-B type) has an internal orange LED that turns steady on when connecting the gateway to the PC with the console cable. The light emitted by this LED reflects through Button B's own LED. Don't confound this effect with the button's LED activity.

4.4. DIP Switches

The gateway has two DIP switches:

- DIP switch A (SW A)
- DIP switch B (SW B)

Each DIP switch is dedicated to a 485 port, and its function is to activate or deactivate the termination resistor (position 1) and the polarization (positions 2 and 3) of each port.

Position			Description
1	2	3	
ON	X	X	120 Ω termination active
OFF	X	X	120 Ω termination inactive (default position)
X	ON	ON	Polarization active (default position)
X	OFF	OFF	Polarization inactive

4.5. Buttons

Two push buttons, labeled as **Button A** and **Button B**, are located on the front panel of the gateway. The function of these buttons depend on whether a USB flash drive is connected to the gateway.

- **No USB flash drive is connected to the gateway.**
  - **Button A**
    Press Button A once to broadcast a RECALL_MAX_LEVEL.

    NOTE
    The installation lights turn on at the maximum level.

    Press Button A again to broadcast an OFF.

    NOTE
    The installation lights turn off.

  - **Button B**
    Press Button B once to send an I-Am message to the network.

    NOTE
    This function for Button B only applies to the DALI to BACnet application.

- **A USB flash drive is connected to the gateway.**

  NOTICE
  - The gateway only supports USB flash drives. External HDD are not supported.
  - The gateway supports USB flash drives with FAT32 and exFAT file systems.

  NOTE
  The function of Button A and Button B can be configured with Intesis MAPS as shown in this picture below:

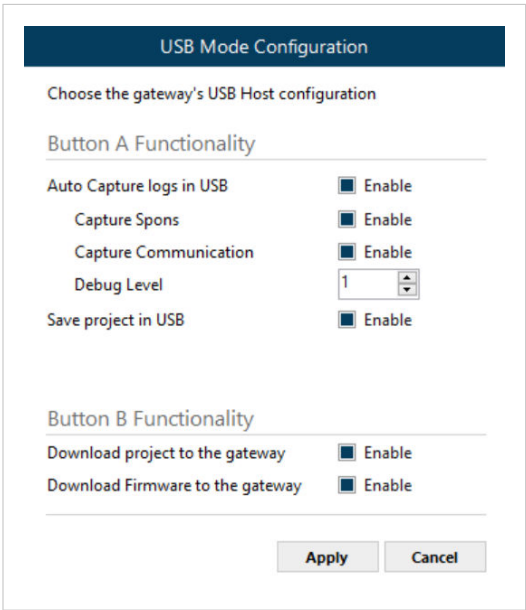

NOTE
When using Button A and Button B functions related to a USB flash drive, we recommend connecting the gateway to a computer running Intesis MAPS to track the process via the Diagnostic tab's Console viewer.

To know more, see the Intesis MAPS Guide for IN703DAL0640000.

– **Button A**
By default, it is used to capture logs and save the gateway's configuration on a USB flash drive.
Follow this procedure:

1. Connect the USB flash drive to the gateway through its USB port.

   NOTE
   The Console viewer message "USB: Storage Device Attached" informs that the USB device has been detected.

2. The LEDs next to the buttons start to blink alternatively for 15 seconds.

   NOTICE
   Button A will be active during these 15 seconds. Press it before the LEDs turn off.

   NOTE
   The Console viewer message "USB: [some specific USB device information] mounted" informs that the USB device is ready.

3. Press Button A once to save the current gateway's configuration to the USB flash drive and to start capturing logs.
   The LED of Button A blinks while data is being loaded from the gateway to the USB device.

   NOTE
   The Console viewer message "USB: Project written successfully to USB" informs that the project has been downloaded to the USB device.

   NOTE
   The Console viewer message "USB: Writing logs started" informs that logs are been downloaded to the USB device.

4. Press and hold Button A for five seconds to stop capturing logs.

   NOTE
   The Console viewer message "USB: USB logging canceled by user" informs that logs are been downloaded to the USB device.

5. Disconnect the USB flash drive from the gateway.

   NOTE
   The Console viewer message "USB: Storage Device Detached" informs that the USB device has been disconnected.

– **Button B**
  By default, it is used to upload an Intesis MAPS project and a firmware version from the USB flash drive to the gateway.
  Follow this procedure:

1. Connect the USB flash drive to the gateway through its USB port.

   NOTE
   The Console viewer message "USB: Storage Device Attached" informs that the USB device has been detected.

2. The LEDs next to the buttons start to blink alternatively for 15 seconds.

   NOTICE
   Button B will be active during these 15 seconds. Press it before the LEDs turn off.

   NOTE
   The Console viewer message "USB: [some specific USB device information] mounted" informs that the USB device is ready.

3. Press Button B once to upload the Intesis MAPS project and the firmware version stored on the USB flash drive to the gateway.
   The LED of Button B blinks while data is being loaded from the USB device to the gateway.

   NOTICE
   If more than one project is stored in the USB device, the gateway will upload the last saved project. The project/firmware must be located in the pen drive root memory, not inside a folder.

   NOTE
   The Console viewer message "USB: Saving project from the storage device" informs that the project has been uploaded to the gateway.

   NOTE
   The Console viewer message "FWUPDATE: DONE" informs that the firmware update process has been successful.

4. Disconnect the USB flash drive from the gateway.

   NOTE
   The Console viewer message "USB: Storage Device Detached" informs that the USB device has been disconnected.

4.5.1. Factory Reset

Use Button A + Button B to reset the gateway to the factory settings.

Follow this procedure:

1. Disconnect the gateway from power.
2. Press and hold Button A and Button B simultaneously.
3. Connect the gateway to power again.
4. Wait until the LEDs start to cycle on and off from top to bottom.
5. Release Button A and Button B.

NOTE
The process could take up to 90 seconds to finish.

TIP
If the gateway is connected to Intesis MAPS, the Console viewer in the Diagnostic tab will display the message "Performing reset to factory settings...", indicating that the process has started. Once finished, the Console viewer displays "...done!"

4.6. Technical Specifications

Housing	Material: Plastic, type ABS (UL 94 V-0) Color: Light grey (RAL 7035) Net dimensions (HxWxD): 90 x 88 x 58 mm / 3.54 x 3.46 x 2.28" Protection: IP20	
Mounting	DIN rail EN 60715 TH35	
Wiring	Cross-section/gauge per terminal: One core: 0.2 .. 2.5 mm^2 (24 .. 11 AWG) Two cores: 0.2 .. 1.5 mm^2 (24 .. 15 AWG) Three cores: Not permitted Use solid wires or stranded wires (twisted or with ferrule).	
Power supply	1 x Green pluggable terminal block (three poles) 24 VDC ±10%, 6.5 W Connect the ground terminal (⏚) to the installation grounding	
Port A	1 x Green pluggable terminal block (two poles: A1, A2): Not used 1 x Orange pluggable terminal block (two poles) for DALI: **A3**: DA+ **A4**: DA- DALI guaranteed current: 230 mA DALI maximum current: 250 mA Voltage rating: 16 VDC	
Ethernet	1 x Ethernet RJ45 10/100BASE-T	
Port B EIA-485	1 x Green pluggable terminal block (three poles): **B1**: A+ **B2**: B- **B3**: SG	
Port B EIA-232	1 x DB9 male connector	
USB port	USB A type 2.0 connector Flash drives only (HDD not supported) Power consumption limited to 150 mA	
Console port	USB Mini-B type 2.0 connector	
Battery	Type: Manganese Dioxide Lithium button battery Size: 20 mm x 3.2 mm (0.79" x 0.13") Capacity: 3 V, 255 mA	
Buttons	2 x Push buttons Button A Button B	
LED indicators	10 x LEDs for gateway and communication status 2 x Run (Power/Error) 2 x Ethernet Link/Speed 2 x Port A TX/RX	2 x Port B TX/RX 1 x Button A indicator 1 x Button B indicator
DIP switches SW A / SW B	2 x DIP switch blocks for EIA-485 serial port configuration: DIP switch A (SW A): Not used DIP switch B (SW B): Position 1: On: 120 Ω termination active Off: 120 Ω termination inactive	

	Position 2 and 3: On: Polarization active Off: Polarization inactive
Operational conditions	Temperature: -10 .. 60°C / 14 .. 140°F Humidity: 5 .. 95% (No condensation)
Isolation between comm. ports	1000 VDC. (Except between Port B EIA-485 and EIA-232)

4.7. Dimensions

NET DIMENSIONS (HxWxD)
Millimeters: 90 x 88 x 58 mm
Inches: 3.54 x 3.46 x 2.28"

IMPORTANT
Leave enough clear space to wire the gateway easily and for the subsequent manipulation of elements, such as connectors, DIP switches, etc.

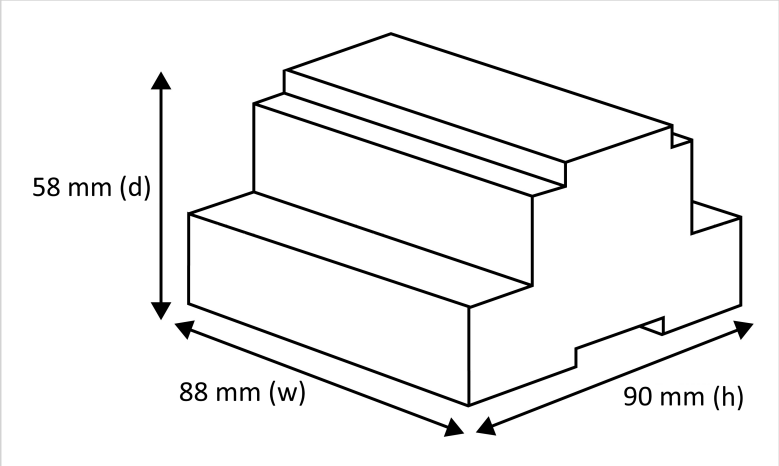

5. Available Protocol Combinations

NOTE
Signals marked as *Optional signals* are supported by the gateway but may not be supported by the server devices of the installation. Please refer to the technical documentation of each server device to know which signals they support.

5.1. DALI to BACnet/IP and MS/TP

NOTICE
Consult the Protocol Implementation Conformance Statement (PICS) document at https://www.intesis.com/docs/bacnet-server-pic-statement.

5.1.1. BACnet Objects

NOTE
For a complete gateway configuration guide, please refer to the Intesis MAPS Guide for IN703DAL0640000.

5.1.1.1. All Ballasts (BACnet)

Object name	Possible values	Object type	Object instance	R/W
Uyxx_Ballast / Lamp Failure	0: OK 1: Ballast / Lamp Failure	3-Binary Input	7000*y+(100*xx)+0	R
Uyxx_Update All ECG Status	0: Update Finished 1: Trigger Update	3-Binary Input	7000*y+(100*xx)+0	RW
Uyxx_Ballast Status	b7: PwrCycle b6: MissShAdd b5: ResetSt b4: FadeRun b3: BallLimErr b2: LampPwrOn b1: LampFail b0: BalFail	0-Analog Input	7000*y+(100*xx)+0	R
Uyxx_Actual Level	0 .. 100%	0-Analog Input	7000*y+(100*xx)+1	R
Uyxx_Device Type	0: Fluorescent 1: Emergency 6: LED 8: Color control	0-Analog Input	7000*y+(100*xx)+2	R
Uyxx_Physical Minimum Level	0 .. 100%	0-Analog Input	7000*y+(100*xx)+3	R
Uyxx_Min Level	0 .. 100%	0-Analog Input	7000*y+(100*xx)+4	R
Uyxx_Max Level	0 .. 100%	0-Analog Input	7000*y+(100*xx)+5	R
y: Channel (0 for the object instance formula; A for the object name) xx: Ballast short address (0 .. 63)				

Object name	Possible values	Object type	Object instance	R/W
Uyxx_Power On Level	0 .. 100%	0-Analog Input	7000*y+(100*xx)+6	R
Uyxx_System Failure Level	0 .. 100%	0-Analog Input	7000*y+(100*xx)+7	R
Uyxx_Fade Time	0 .. 15	0-Analog Input	7000*y+(100*xx)+8	R
Uyxx_Fade Rate	1 .. 15	0-Analog Input	7000*y+(100*xx)+9	R
Uyxx_Arc Power Level	0 .. 100%	1-Analog Output	7000*y+(100*xx)+0	RW
Uyxx_Arc Power Off / On	0: Off 1: 100%	4-Binary Output	7000*y+(100*xx)+0	RW
Uyxx_Step Down / Up	0: Step Down 1: Step Up	4-Binary Output	7000*y+(100*xx)+1	RW
Uyxx_Recall Min Level	1: Recall Min Level	4-Binary Output	7000*y+(100*xx)+2	W (T)
Uyxx_Recall Max Level	1: Recall Max Level	4-Binary Output	7000*y+(100*xx)+3	W (T)
Uyxx_Go To Scene	0 .. 15	1-Analog Output	7000*y+(100*xx)+1	RW
Uyxx_Store Current Level as Scene	0 .. 15	1-Analog Output	7000*y+(100*xx)+2	RW
Uyxx_Clear/Remove Scene	0 .. 15	1-Analog Output	7000*y+(100*xx)+3	RW
Uyxx_Add to DALI Group	0 .. 15	1-Analog Output	7000*y+(100*xx)+10	RW
Uyxx_Remove from DALI Group	0 .. 15	1-Analog Output	7000*y+(100*xx)+11	RW
Uyxx_Set Fade Time	0 .. 15	1-Analog Output	7000*y+(100*xx)+4	RW
Uyxx_Set Fade Rate	1 .. 15	1-Analog Output	7000*y+(100*xx)+5	RW
Uyxx_Set Min Level	0 .. 100%	1-Analog Output	7000*y+(100*xx)+6	RW
Uyxx_Set Max Level	0 .. 100%	1-Analog Output	7000*y+(100*xx)+7	RW
Uyxx_Set Power-on Level	0 .. 100%	1-Analog Output	7000*y+(100*xx)+8	RW
Uyxx_Set System-failure Level	0 .. 100%	1-Analog Output	7000*y+(100*xx)+9	RW
y: Channel (0 for the object instance formula; A for the object name) xx: Ballast short address (0 .. 63)				

5.1.1.2. DALI Groups – All Ballasts (BACnet)

Object name	Possible values	Object type	Object instance	R/W
Gyxx_Arc Power Level	0 .. 100%	1-Analog Output	7000*y+(20*xx)+6400	RW
Gyxx_Arc Power Off / On	0: Off 1: 100%	4-Binary Output	7000*y+(20*xx)+6400	RW
Gyxx_Step Down / Up	0: Step Down 1: Step Up	4-Binary Output	7000*y+(20*xx)+6401	RW
Gyxx_Recall Min Level	1: Recall Min Level	4-Binary Output	7000*y+(20*xx)+6402	W
Gyxx_Recall Max Level	1: Recall Max Level	4-Binary Output	7000*y+(20*xx)+6403	W
Gyxx_Go to Scene	0 .. 15	1-Analog Output	7000*y+(20*xx)+6401	RW
Gyxx_Store Current Level as Scene	0 .. 15	1-Analog Output	7000*y+(20*xx)+6402	RW
Gyxx_Clear/Remove Scene	0 .. 15	1-Analog Output	7000*y+(20*xx)+6403	RW
Gyxx_Set Fade Time	0 .. 15	1-Analog Output	7000*y+(20*xx)+6404	RW
Gyxx_Set Fade Rate	1 .. 15	1-Analog Output	7000*y+(20*xx)+6405	RW
Gyxx_Set Min Level	0 .. 100%	1-Analog Output	7000*y+(20*xx)+6406	RW
Gyxx_Set Max Level	0 .. 100%	1-Analog Output	7000*y+(20*xx)+6407	RW
Gyxx_Set Power-on Level	0 .. 100%	1-Analog Output	7000*y+(20*xx)+6408	RW
y: Channel (0 for the object instance formula; A for the object name) xx: Group number (0 .. 15)				

Object name	Possible values	Object type	Object instance	R/W
Gyxx_Set System-failure Level	0 .. 100%	1-Analog Output	7000*y+(20*xx)+6409	RW
Gyxx_Group Daylight active	0: Inactive 1: Active	0-Analog Input	7000*y+(20*xx)+6400	RW
y: Channel (0 for the object instance formula; A for the object name) xx: Group number (0 .. 15)				

5.1.1.3. Broadcast – All Ballasts (BACnet)

Object name	Possible values	Object type	Object instance	R/W
By_Arc Power Level	0 .. 100%	1-Analog Output	7000*y+6800	RW
By_Arc Power Off / On	0: Off 1: 100%	4-Binary Output	7000*y+6800	RW
By_Step Down / Up	0: Step Down 1: Step Up	4-Binary Output	7000*y+6801	RW
By_Recall Min Level	1: Recall Min Level	4-Binary Output	7000*y+6802	W (T)
By_Recall Max Level	1: Recall Max Level	4-Binary Output	7000*y+6803	W (T)
By_Go to Scene	0 .. 15	1-Analog Output	7000*y+6801	RW
By_Store Current Level as Scene	0 .. 15	1-Analog Output	7000*y+6802	RW
By_Clear/Remove Scene	0 .. 15	1-Analog Output	7000*y+6803	RW
By_Set Fade Time	0 .. 15	1-Analog Output	7000*y+6804	RW
By_Set Fade Rate	1 .. 15	1-Analog Output	7000*y+6805	RW
By_Set Min Level	0 .. 100%	1-Analog Output	7000*y+6806	RW
By_Set Max Level	0 .. 100%	1-Analog Output	7000*y+6807	RW
By_Set Power_on Level	0 .. 100%	1-Analog Output	7000*y+6808	RW
By_Set System-failure Level	0 .. 100%	1-Analog Output	7000*y+6809	RW
y: Channel (0 for the object instance formula; A for the object name)				

5.1.1.4. Emergency Ballasts (Type 1) (BACnet)

Object name	Possible values	Object type	Object instance	R/W
Uyxx_Failure Status	b7: FunctFail b6: DurFail b5: DurTestDelay b4: FunctTestDelay b3: EmLampFail b2: BattFail b1: BattDurFail b0: CircFail	0-Analog Input	7000*y+(100*xx)+15	R
y: Channel (0 for the object instance formula; A for the object name) xx: Ballast short address (0 .. 63)				

Object name	Possible values	Object type	Object instance	R/W
Uyxx_Emergency Mode	b7: HardSwOn b6: HardInhibit b5: DurTestProg b4: FunctTestProg b3: ExtdEmMode b2: EmMode b1: NormMode b0: RestMode	0-Analog Input	7000*y+(100*xx)+16	R
Uyxx_Emergency Status	b7: PhysicSel b6: Ident b5: DurTestPend b4: FunctTestPend b3: BattFull b2: DurTestDone b1: FunctTestDone b0: InhibitMode	0-Analog Input	7000*y+(100*xx)+17	R
Uyxx_Emergency Battery Charge	0 .. 100%	0-Analog Input	7000*y+(100*xx)+18	R
Uyxx_Next Function Test	0 .. 16384 hours	0-Analog Input	7000*y+(100*xx)+19	R
Uyxx_Next Duration Test	0 .. 16384 hours	0-Analog Input	7000*y+(100*xx)+20	R
Uyxx_Function Test Interval	0: Disabled 1 .. 255 days	0-Analog Input	7000*y+(100*xx)+21	R
Uyxx_Duration Test Interval	0: Disabled 1 .. 97 weeks	0-Analog Input	7000*y+(100*xx)+22	R
Uyxx_Test Execution Timeout	0 .. 255 days	0-Analog Input	7000*y+(100*xx)+23	R
Uyxx_Prolong Time	0 .. 127.5 minutes	0-Analog Input	7000*y+(100*xx)+24	R
Uyxx_Duration Test Result	0 .. 510 minutes	0-Analog Input	7000*y+(100*xx)+25	R
Uyxx_Lamp Total Operation Time	0 .. 1016 hours	0-Analog Input	7000*y+(100*xx)+26	R
Uyxx_Emergency Level	0 .. 100%	0-Analog Input	7000*y+(100*xx)+27	R
Uyxx_Emergency Min Level	0 .. 100%	0-Analog Input	7000*y+(100*xx)+28	R
Uyxx_Emergency Max Level	0 .. 100%	0-Analog Input	7000*y+(100*xx)+29	R
Uyxx_Rated Duration	0 .. 510 minutes	0-Analog Input	7000*y+(100*xx)+30	R
Uyxx_Features	b7: RelightRestSup b6: PhysicSelSup b5: HardInSup b4: AdjsEmLvl b3: AutoTestCap b2: SwitchMainCG b1: MainCG b0: IntegralEmCG	0-Analog Input	7000*y+(100*xx)+31	R
Uyxx_Lamp Emergency Time	0 .. 254 hours	0-Analog Input	7000*y+(100*xx)+32	R
Uyxx_Rest	1: Extinguish Lamp	4-Binary Output	7000*y+(100*xx)+9	W (T)
Uyxx_Inhibit	1: Start Inhibit Mode	4-Binary Output	7000*y+(100*xx)+10	W (T)
Uyxx_Re-Light/Reset Inhibit	1: Cancel Inhibit Mode	4-Binary Output	7000*y+(100*xx)+11	W (T)
Uyxx_Start Function Test	1: Start Function Test	4-Binary Output	7000*y+(100*xx)+12	W (T)
Uyxx_Start Duration Test	1: Start Duration Test	4-Binary Output	7000*y+(100*xx)+13	W (T)
Uyxx_Stop Test	1: Stop Function/Duration Test	4-Binary Output	7000*y+(100*xx)+14	W (T)
y: Channel (0 for the object instance formula; A for the object name) xx: Ballast short address (0 .. 63)				

Object name	Possible values	Object type	Object instance	R/W
Uyxx_Reset Function Test Done Flag	1: Reset Function Flag	4-Binary Output	7000*y+(100*xx)+15	W (T)
Uyxx_Reset Duration Test Done Flag	1: Reset Duration Flag	4-Binary Output	7000*y+(100*xx)+16	W (T)
Uyxx_Reset Lamp	1: Lamp Emergency Time Reset	4-Binary Output	7000*y+(100*xx)+17	W (T)
Uyxx_Store Test Execution Timeout	0 .. 255 days	1-Analog Output	7000*y+(100*xx)+21	RW
Uyxx_Store Prolong Time	0 .. 127.5 minutes	1-Analog Output	7000*y+(100*xx)+22	RW
Uyxx_Store Function Test Interval	1 .. 255 days 0: Disabled	1-Analog Output	7000*y+(100*xx)+23	RW
Uyxx_Store Duration Test Interval	1 .. 97 weeks 0: Disabled	1-Analog Output	7000*y+(100*xx)+24	RW
Uyxx_Store Emergency Level	0 .. 100%	1-Analog Output	7000*y+(100*xx)+25	RW
y: Channel (0 for the object instance formula; A for the object name) xx: Ballast short address (0 .. 63)				

5.1.1.5. LED Ballasts (Type 6) (BACnet)

Object name	Possible values	Object type	Object instance	R/W
Uyxx_Failure Status	b7: RefMeasurFail b6: ThermLightLvl b5: ThermShut b4: CurrProtAct b3: LoadInc b2: LoadDec b1: OpenC b0: ShortC	0-Analog Input	7000*y+(100*xx)+38	R
Uyxx_Gear Type	b3: dcSuppPoss b2: acSuppPoss b1: LEDModInt b0: LEDPowerSInt	0-Analog Input	7000*y+(100*xx)+39	R
Uyxx_Dimming Curve	0: Standard Logarithmic Dim Curve 1: Linear Dim Curve]	3-Binary Input	7000*y+(100*xx)+1	R
Uyxx_Possible Operating Modes	b3: HighCurrPulMod b2: OutCurrContr b1: AMModePoss b0: PWMModePoss	0-Analog Input	7000*y+(100*xx)+40	R
Uyxx_Features	b7: PhysicSelSupp b6: LightLvlRedReq b5: ThermShutReq b4: CurrProtActReq b3: LoadIncReq b2: LoadDecReq b1: OpenCQ b0: ShortCQ	0-Analog Input	7000*y+(100*xx)+41	R
Uyxx_Reference Running	0: No 1: Yes	3-Binary Input	7000*y+(100*xx)+2	R
Uyxx_Current Protector	0: Disabled 1: Enabled	3-Binary Input	7000*y+(100*xx)+3	R
y: Channel (0 for the object instance formula; A for the object name) xx: Ballast short address (0 .. 63)				

Object name	Possible values	Object type	Object instance	R/W
Uyxx_Operating Mode	b4: NonLogDimCurveAct b3: HighCurrPulModeAct b2: OutCurrContr b1: AMModeAct b0: PWMModeAct	0-Analog Input	7000*y+(100*xx)+42	R
Uyxx_Fast Fade Time	0 .. 27	0-Analog Input	7000*y+(100*xx)+43	R
Uyxx_Min Fast Fade Time	0 .. 27	0-Analog Input	7000*y+(100*xx)+44	R
Uyxx_Reference System Power	1: Trigger DALI Power Referencing	4-Binary Output	7000*y+(100*xx)+23	W (T)
Uyxx_Enable/Disable Current Protector	0: Disable 1: Enable	4-Binary Output	7000*y+(100*xx)+24	RW
Uyxx_Select Dimming Curve	0: Standard Logarithmic Dim Curve 1: Linear Dim Curve	4-Binary Output	7000*y+(100*xx)+25	RW
Uyxx_Store Fast Fade Time	0 .. 27	1-Analog Output	7000*y+(100*xx)+31	RW
y: Channel (0 for the object instance formula; A for the object name) xx: Ballast short address (0 .. 63)				

5.1.1.6. Color Control (Type 8) (BACnet)

NOTICE
The formula for the object instance will differ:

- For Intesis MAPS versions earlier than 1.2.24.0.
- For gateway firmware versions earlier than 2.0.4.0 in the case of BACnet, and 2.0.1.0 in the case of Modbus.

Object name	Possible values	Object type	Object instance	R/W
Uyxx_Store Current Level & Colour as Scene	0 .. 15	1-Analog Output	25000+(6400*y)+(50*xx)+0	W
Uyxx_Clear/Remove Colour from Scene	0 .. 15	1-Analog Output	25000+(6400*y)+(50*xx)+1	W
Uyxx_Arc Colour Level	Tc: 1000 .. 10000°K RGB: 0 .. 0xFEFEFE	1-Analog Output	25000+(6400*y)+(50*xx)+2	W
Uyxx_Arc Colour White Level-RGBW *For RGBW only*	W: 0 .. 100	1-Analog Output	25000+(6400*y)+(50*xx)+3	W
Uyxx_Colour Tc Step W/C	0: Step Cooler 1: Step Warmer	4-Binary Output	25000+(6400*y)+(50*xx)+0	W
Uyxx_Actual Colour Level	Tc: 1000 .. 10000°K RGB: 0 .. 0xFEFEFE	0-Analog Input	25000+(6400*y)+(50*xx)+0	R
Uyxx_Actual Colour White Level-RBGW *For RGBW only*	W: 0 .. 100	0-Analog Input	25000+(6400*y)+(50*xx)+1	R
Uyxx_Power ON Colour	Tc: 1000 .. 10000°K RGB: 0 .. 0xFEFEFE	0-Analog Input	25000+(6400*y)+(100*xx)+2	R
Uyxx_Power ON Colour White Level-RGBW	W: 0 .. 100	0-Analog Input	25000+(6400*y)+(100*xx)+3	R
Uyxx_System Fail Colour	Tc: 1000 .. 10000°K RGB: 0 .. 0xFEFEFE	0-Analog Input	25000+(6400*y)+(100*xx)+4	R
Uyxx_Syst Fail Colour White Level-RGBW	W: 0 .. 100	0-Analog Input	25000+(6400*y)+(100*xx)+5	R
Uyxx_Min Colour Range (°K)	Tc: 1000 ... 10000°K	0-Analog Input	25000+(6400*y)+(100*xx)+6	R
y: Channel (0 for the object instance formula; A for the object name) xx: Ballast short address (0 .. 63)				

Object name	Possible values	Object type	Object instance	R/W
Uyxx_Max Colour Range (°K)	Tc: 1000 .. 10000°K	0-Analog Input	25000+(6400*y)+(100*xx)+7	R
Uyxx_Set Power ON Colour	Tc: 1000 .. 10000°K RGB: 0 .. 0xFEFEFE	1-Analog Output	25000+(6400*y)+(100*xx)+4	W
Uyxx_Set Power ON Colour White Level-RGBW	W: 0 .. 100	1-Analog Output	25000+(6400*y)+(100*xx)+5	W
Uyxx_Set System Fail Colour	Tc: 1000 .. 10000°K RGB: 0 .. 0xFEFEFE	1-Analog Output	25000+(6400*y)+(100*xx)+6	W
Uyxx_Set Syst Fail Colour White Level-RGBW	W: 0 .. 100	1-Analog Output	25000+(6400*y)+(100*xx)+7	W
Uyxx_Set Min Colour Range (°K)	Tc: 1000 .. 10000°K	1-Analog Output	25000+(6400*y)+(100*xx)+8	W
Uyxx_Set Max Colour Range (°K)	Tc: 1000 .. 10000°K	1-Analog Output	25000+(6400*y)+(100*xx)+9	W
y: Channel (0 for the object instance formula; A for the object name) xx: Ballast short address (0 .. 63)				

5.1.1.7. DALI Groups – Color Ballasts (Type 8) (BACnet)

Object name	Possible values	Object type	Object instance	R/W
Gyxx_Arc Colour level Tc	1000 .. 10000°K	1-Analog Output	7000*y+(20*xx)+6410	RW
Gyxx_Arc Colour White level for RGBW *For RGBW only*	W: 0 .. 100	1-Analog Output	7000*y+(20*xx)+6411	RW
Gyxx_Colour Tc Step Warmer/Cooler	0: Step Cooler 1: Step Warmer	4-Binary Output	7000*y+(20*xx)+6404	RW
Gyxx_Arc Colour level RGB	0 .. 0xFEFEFE	1-Analog Output	7000*y+(20*xx)+6412	RW
y: Channel (0 for the object instance formula; A for the object name) xx: Group number (0 .. 15)				

5.1.1.8. Broadcast - Color Ballasts (Type 8) (BACnet)

Object name	Possible values	Object type	Object instance	R/W
By_Arc Colour level Tc	1000 .. 10000°K	1-Analog Output	7000*y+6810	RW
By_Arc Colour White level for RGBW *For RGBW only*	W: 0 .. 100	1-Analog Output	7000*y+6811	RW
By_Colour Tc Step Warmer/Cooler	0: Step Cooler 1: Step Warmer	4-Binary Output	7000*y+6804	RW
By_Arc Colour level RGB	RGB: 0 .. 0xFEFEFE	1-Analog Output	7000*y+6812	RW
y: Channel (0 for the object instance formula; A for the object name)				

5.1.1.9. Energy Reporting (Type 51) (BACnet)

NOTICE
The formula for the object instance will differ:

- For Intesis MAPS versions earlier than 1.2.24.0.
- For gateway firmware versions earlier than 2.0.4.0 in the case of BACnet, and 2.0.1.0 in the case of Modbus.

Object name	Possible values	Object type	Object instance	R/W
Uyxx_Active Energy	0 .. 281474976710653 Wh	0-Analog Input	25000+(6400*y)+(100*xx)+8	R
Uyxx_Active Power	0 .. 4294967293 W	0-Analog Input	25000+(6400*y)+(100*xx)+9	R
Uyxx_Apparent Energy *Optional signal*	0 .. 281474976710653 VAh	0-Analog Input	25000+(6400*y)+(100*xx)+10	R
Uyxx_Apparent Power *Optional signal*	0 .. 4294967293 VA	0-Analog Input	25000+(6400*y)+(100*xx)+11	R
Uyxx_Active Energy Loadside *Optional signal*	0 .. 281474976710653 Wh	0-Analog Input	25000+(6400*y)+(100*xx)+12	R
Uyxx_Active Power Loadside *Optional signal*	0 .. 4294967293 W	0-Analog Input	25000+(6400*y)+(100*xx)+13	R
y: Channel (0 for the object instance formula; A for the object name) xx: Ballast short address (0 .. 63)				

5.1.1.10. Diagnostics and Maintenance (Type 52) (BACnet)

NOTICE
The formula for the object instance will differ:

- For Intesis MAPS versions earlier than 1.2.24.0.
- For gateway firmware versions earlier than 2.0.4.0 in the case of BACnet, and 2.0.1.0 in the case of Modbus.

Object name	Possible values	Object type	Object instance	R/W
Uyxx_Control Gear Operating Time	0 .. 4294967293 seconds	0-Analog Input	25000+(6400*y)+(100*xx)+14	R
Uyxx_Control Gear Start Counter	0 .. 16777213	0-Analog Input	25000+(6400*y)+(100*xx)+15	R
Uyxx_Control Gear Temperature	-60 .. 193°C	0-Analog Input	25000+(6400*y)+(100*xx)+16	R
Uyxx_Control Gear Failure	bitfields 0: Overal failure 1: Ext. Supply Undervoltage 2: Ext. Supply Overvoltage 3: ECG Output Power Limit 4: Thermal derating 5: Thermal shutdown	0-Analog Input	25000+(6400*y)+(100*xx)+17	R
Uyxx_Light Source Start Counter Resettable	0 .. 16777213	1-Analog Input	25000+(6400*y)+(100*xx)+10	RW
Uyxx_Light Source Set Start Counter Resettable	0 .. 16777213	1-Analog Output	25000+(6400*y)+(100*xx)+11	RW
Uyxx_Light Source Start Counter	0 .. 16777213	1-Analog Input	25000+(6400*y)+(100*xx)+12	RW
Uyxx_Light Source On Time Resettable	0 .. 4294967293 seconds	1-Analog Input	25000+(6400*y)+(100*xx)+13	RW
Uyxx_Light Source Set On Time Resettable	0 .. 4294967293 seconds	1-Analog Output	25000+(6400*y)+(100*xx)+14	RW
Uyxx_Light Source On Time	0 .. 4294967293 seconds	1-Analog Input	25000+(6400*y)+(100*xx)+15	RW
Uyxx_Light Source Temperature *Optional signal*	-60 .. 193°C	1-Analog Input	25000+(6400*y)+(100*xx)+16	RW
y: Channel (0 for the object instance formula; A for the object name) xx: Ballast short address (0 .. 63)				

Object name	Possible values	Object type	Object instance	R/W
Uyxx_Lamp Failure	bitfields 0: Overal failure 1: Open Circuit 2: Short Circuit 3: Thermal Derating 4: Thermal Shutdown	0-Analog Input	25000+(6400*y)+(100*xx)+18	R
Uyxx_Rated Median Useful Life Of Luminaire *Optional signal*	0 .. 253 (x1000 hours)	0-Analog Input	25000+(6400*y)+(100*xx)+19	R
Uyxx_Internal Control Gear Reference Temperature *Optional signal*	-60 .. 193°C	0-Analog Input	25000+(6400*y)+(100*xx)+20	R
Uyxx_Rated Median Useful Light Source Starts *Optional signal*	0 .. 65534 (x100)	0-Analog Input	25000+(6400*y)+(100*xx)+21	R
y: Channel (0 for the object instance formula; A for the object name) xx: Ballast short address (0 .. 63)				

5.1.1.11. Area (BACnet)

Object name	Possible values	Object type	Object instance	R/W
Ay-x_Occupancy State	0: Vacant 1: Occupied 2: Transition 3: Unkown	13-Multistate Input	(7000*y)+6840+(9*x)+0	R
Ay-x_Light Average	Lux readings average of the sensors in the area	0-Analog Input	(7000*y)+6840+(9*x)+0	R
Ay-x_Daylighting Area Active	0: Inactive 1: Active	0-Analog Input	(7000*y)+6840+(9*x)+1	R
y: Channel (0 for the object instance formula; A for the object name) x: Area index (0 .. 16)				

5.1.1.12. Input Devices (BACnet)

Object name	Possible values	Object type	Object instance	R/W
Iyxx_Occupancy Input Value	0: Vacant + No Mov 1: Vacant + Mov 2: Occupied + No Mov 3: Occupied + Mov	13-Multistate Input	14000+(640*y)+(10*x) +z+SI*1280	R
Iyxx_Light Input Value	Lux	0-Analog Input	14000+(640*y)+(10*x) +z+SI*1280	R
Iyxx_Push Button Input Value-Release	0: Inactive 1: Button released event	3-Binary Input	14000+(640*y)+(10*x) +z+SI*1280	R
y: Channel (0 for the object instance formula; A for the object name) x: Input device index (0 .. 63) z: Instance index (0 .. 9) SI: Signal index (0 .. 7)				

Object name	Possible values	Object type	Object instance	R/W
Iyxx_Push Button Input Value-Pressed	0: Inactive 1: Button pressed event	3-Binary Input	14000+(640*y)+(10*x)+z+SI*1280	R
Iyxx_Push Button Input Value-Short Press	0: Inactive 1: Short press event	3-Binary Input	14000+(640*y)+(10*x)+z+SI*1280	R
Iyxx_Push Button Input Value-Double Press	0: Inactive 1: Double press event	3-Binary Input	14000+(640*y)+(10*x)+z+SI*1280	R
Iyxx_Push Button Input Value-Long press Start	0: Inactive 1: Long press start event	3-Binary Input	14000+(640*y)+(10*x)+z+SI*1280	R
Iyxx_Push Button Input Value-Long press Repeat	0: Inactive 1: Long press repeat event	3-Binary Input	14000+(640*y)+(10*x)+z+SI*1280	R
Iyxx_Push Button Input Value-Long Press Stop	0: Inactive 1: Long press stop event	3-Binary Input	14000+(640*y)+(10*x)+z+SI*1280	R
Iyxx_Push Button Input Value-Button Stuck	0: Button free 1: Button stuck	3-Binary Input	14000+(640*y)+(10*x)+z+SI*1280	R
Iyxx_Absolute input	Percentage: 0 .. 100% Absolute value: 0 .. (2^resolution -1)	0-Analog Input	14000+(640*y)+(10*x)+z+SI*1280	R
Input Device Comm Error	0: OK 1: Comm error	3-Binary Input	14000+(640*y)+(10*x)+z+SI*1280	R
y: Channel (0 for the object instance formula; A for the object name) x: Input device index (0 .. 63) z: Instance index (0 .. 9) SI: Signal index (0 .. 7)				

5.2. DALI to Modbus TCP and RTU

5.2.1. Modbus Registers

NOTICE
This part is common for Modbus RTU and TCP.

Function to read Modbus registers:

- 03 Read holding registers
- 04 Read input registers

Function to write Modbus registers:

- 06 Write single holding registers
- 16 Write multiple holding registers

Modbus register contents are expressed in most significant bit (MSB) .. less significant bit (LSB).

The following tables list all available Modbus registers for the gateway.

NOTE
For a complete gateway configuration guide, please refer to the Intesis MAPS User manual for IN703DAL0640000.

5.2.1.1. All Ballasts (Modbus)

NOTICE
Read/write parameter terminology:

- **R**: Read-only register
- **W**: Write-only register
- **RW**: Read and write register
- **T**: Trigger (The register activates an action and then returns to its default value).

Register name	Possible values	Address formula	R/W
Ballast / Lamp Failure Bit Fields ECG 15 .. 0	0: OK 1: Ballast / Lamp Failure bi* *i=xx-(16*(y-1))	7000*y+0	R
Ballast / Lamp Failure Bit Fields ECG 31 .. 16	0: OK 1: Ballast / Lamp Failure bi* *i=xx-(16*(y-1))	7000*y+1	R
Ballast / Lamp Failure Bit Fields ECG 47 .. 32	0: OK 1: Ballast / Lamp Failure bi* *i=xx-(16*(y-1))	7000*y+2	R
Address formula: y: Channel (0) xx: Ballast short address (0 .. 63)			

Register name	Possible values	Address formula	R/W
Ballast / Lamp Failure Bit Fields ECG 63 .. 48	0: OK 1: Ballast / Lamp Failure bi* *i=xx-(16*(y-1))	7000*y+3	R
Update All ECG Status	0: Update Finished 1: Trigger Update	7000*y+(100*xx)+4	RW
Ballast Status	b7: PwrCycle b6: MissShAdd b5: ResetSt b4: FadeRun b3: BallLimErr b2: LampPwrOn b1: LampFail b0: BallFail	7000*y+(100*xx)+5	R
Actual Level	0 .. 100%	7000*y+(100*xx)+6	R
Main Device Type	0: Fluorescent 1: Emergency 6: LED 8: Color control 255: Other	7000*y+(100*xx)+7	R
Physical Minimum Level	0 .. 100%	7000*y+(100*xx)+8	R
Min Level	0 .. 100%	7000*y+(100*xx)+9	R
Max Level	0 .. 100%	7000*y+(100*xx)+10	R
Power On Level	0 .. 100%	7000*y+(100*xx)+11	R
System Failure Level	0 .. 100%	7000*y+(100*xx)+12	R
Fade Time	0 .. 15	7000*y+(100*xx)+13	R
Fade Rate	1 .. 15	7000*y+(100*xx)+14	R
Arc Power Level	0 .. 100%	7000*y+(100*xx)+15	RW
Arc Power Off / On	0: Off 1: 100%	7000*y+(100*xx)+16	RW
Dim Down / Up	0: Step Down 1: Step Up 2: Down 3: Up 4: Step Down and Off 5: On and Step Up	7000*y+(100*xx)+17	RW
Recall Min Level	1: Recall Min Level	7000*y+(100*xx)+18	W (T)
Recall Max Level	1: Recall Max Level	7000*y+(100*xx)+19	W (T)
Go To Scene	0 .. 15	7000*y+(100*xx)+20	RW
Store Current Level as Scene	0 .. 15	7000*y+(100*xx)+21	RW
Clear/Remove Scene	0 .. 15	7000*y+(100*xx)+22	RW
Add to DALI Group	0 .. 15	7000*y+(100*xx)+29	RW
Remove from DALI Group	0 .. 15	7000*y+(100*xx)+30	RW
Set Fade Time	0 .. 15	7000*y+(100*xx)+23	RW
Set Fade Rate	1 .. 15	7000*y+(100*xx)+24	RW
Set Min Level	0 .. 100%	7000*y+(100*xx)+25	RW
Address formula: y: Channel (0) xx: Ballast short address (0 .. 63)			

Register name	Possible values	Address formula	R/W
Set Max Level	0 .. 100%	7000*y+(100*xx)+26	RW
Set Power-on Level	0 .. 100%	7000*y+(100*xx)+27	RW
Set System-failure Level	0 .. 100%	7000*y+(100*xx)+28	RW
Multicontrol	0: Off 1: 100% 2: StpUp 3: StpDwn 1XX: GoScn 2XX: StoreScn 3XX: RmvScn 1XXX: FdRate 2XXX: FdTime 3XXX: MinLvl 4XXX: MaxLvl 5XXX: PwrOnLvl 6XXX: SysFailLvl	7000*y+(100*xx)+31	RW
Address formula: y: Channel (0) xx: Ballast short address (0 .. 63)			

5.2.1.2. DALI Groups – All Ballasts (Modbus)

NOTICE
Read/write parameter terminology:

- **R**: Read-only register
- **W**: Write-only register
- **RW**: Read and write register
- **T**: Trigger (The register activates an action and then returns to its default value).

Register name	Possible values	Address formula	R/W
Arc Power Level	0 .. 100%	7000*y+(20*xx)+6400	RW
Arc Power Off / On	0: Off 1: 100%	7000*y+(20*xx)+6401	RW
Step Down / Up	0: Step Down 1: Step Up	7000*y+(20*xx)+6402	RW
Recall Min Level	1: Recall Min Level	7000*y+(20*xx)+6403	W (T)
Recall Max Level	1: Recall Max Level	7000*y+(20*xx)+6404	W (T)
Go to Scene	0 .. 15	7000*y+(20*xx)+6405	RW
Store Current Level as Scene	0 .. 15	7000*y+(20*xx)+6406	RW
Clear/Remove Scene	0 .. 15	7000*y+(20*xx)+6407	RW
Set Fade Time	0 .. 15	7000*y+(20*xx)+6408	RW
Set Fade Rate	1 .. 15	7000*y+(20*xx)+6409	RW
Set Min Level	0 .. 100%	7000*y+(20*xx)+6410	RW
Address formula: y: Channel (0) xx: Group number (0 .. 15)			

Register name	Possible values	Address formula	R/W
Set Max Level	0 .. 100%	7000*y+(20*xx)+6411	RW
Set Power-on Level	0 .. 100%	7000*y+(20*xx)+6412	RW
Set System-failure Level	0 .. 100%	7000*y+(20*xx)+6413	RW
Multicontrol	0: Off 1: 100% 2: StpUp 3: StpDwn 1XX: GoScn 2XX: StoreScn 3XX: RmvScn 1XXX: FdRate 2XXX: FdTime 3XXX: MinLvl 4XXX: MaxLvl 5XXX: PwrOnLvl 6XXX: SysFailLvl	7000*y+(20*xx)+6414	RW
Daylight Active-single Group	0: Inactive 1: Active	7000*y+(20*xx)+6415	R
Address formula: y: Channel (0) xx: Group number (0 .. 15)			

5.2.1.3. Broadcast – All Ballasts (Modbus)

NOTICE
Read/write parameter terminology:

- **R**: Read-only register
- **W**: Write-only register
- **RW**: Read and write register
- **T**: Trigger (The register activates an action and then returns to its default value).

Register name	Possible values	Address formula	R/W
Arc Power Level	0 .. 100%	7000*y+6800	RW
Arc Power Off / On	0: Off 1: 100%	7000*y+6801	RW
Step Down / Up	0: Step Down 1: Step Up	7000*y+6802	RW
Recall Min Level	1: Recall Min Level	7000*y+6803	W (T)
Recall Max Level	1: Recall Max Level	7000*y+6804	W (T)
Go to Scene	0 .. 15	7000*y+6805	RW
Store Current Level as Scene	0 .. 15	7000*y+6806	RW
Clear/Remove Scene	0 .. 15	7000*y+6807	RW
Set Fade Time	0 .. 15	7000*y+6808	RW
Set Fade Rate	1 .. 15	7000*y+6809	RW
Address formula: y: Channel (0)			

Register name	Possible values	Address formula	R/W
Set Min Level	0 .. 100%	7000*y+6810	RW
Set Max Level	0 .. 100%	7000*y+6811	RW
Set Power_on Level	0 .. 100%	7000*y+6812	RW
Set System-failure Level	0 .. 100%	7000*y+6813	RW
Broadcast Multicontrol	0: Off 1: 100% 2: StpUp 3: StpDwn 1XX: GoScn 2XX: StoreScn 3XX: RmvScn 1XXX: FdRate 2XXX: FdTime 3XXX: MinLvl 4XXX: MaxLvl 5XXX: PwrOnLvl 6XXX: SysFailLvl	7000*y+6814	RW
Address formula: y: Channel (0)			

5.2.1.4. Emergency Ballasts (Type 1) (Modbus)

NOTICE
Read/write parameter terminology:

- **R**: Read-only register
- **W**: Write-only register
- **RW**: Read and write register
- **T**: Trigger (The register activates an action and then returns to its default value).

Register name	Possible values	Address formula	R/W
Failure Status	b7: FunctFail b6: DurFail b5: DurTestDelay b4: FunctTestDelay b3: EmLampFail b2: BattFail b1: BattDurFail b0: CircFail	7000*y+(100*xx)+42	R
Address formula: y: Channel (0) xx: Ballast short address (0 .. 63)			

Register name	Possible values	Address formula	R/W
Emergency Mode	b7: HardSwOn b6: HardInhibit b5: DurTestProg b4: FunctTestProg b3: ExtdEmMode b2: EmMode b1: NormMode b0: RestMode	7000*y+(100*xx)+43	R
Emergency Status	b7: PhysicSel b6: Ident b5: DurTestPend b4: FunctTestPend b3: BattFull b2: DurTestDone b1: FunctTestDone b0: InhibitMode	7000*y+(100*xx)+44	R
Emergency Battery Charge	0 .. 100%	7000*y+(100*xx)+45	R
Next Function Test	0 .. 16384 hours	7000*y+(100*xx)+46	R
Next Duration Test	0 .. 16384 hours	7000*y+(100*xx)+47	R
Function Test Interval	0: Disabled 1 .. 255 days	7000*y+(100*xx)+48	R
Duration Test Interval	0: Disabled 1 .. 97 weeks	7000*y+(100*xx)+49	R
Test Execution Timeout	0 .. 255 days	7000*y+(100*xx)+50	R
Prolong Time	0 .. 127.5 minutes	7000*y+(100*xx)+51	R
Duration Test Result	0 .. 510 minutes	7000*y+(100*xx)+52	R
Lamp Total Operation Time	0 .. 1016 hours	7000*y+(100*xx)+53	R
Emergency Level	0 .. 100%	7000*y+(100*xx)+54	R
Emergency Min Level	0 .. 100%	7000*y+(100*xx)+55	R
Emergency Max Level	0 .. 100%	7000*y+(100*xx)+56	R
Rated Duration	0 .. 510 minutes	7000*y+(100*xx)+57	R
Features	b7: RelightRestSup b6: PhysicSelSup b5: HardInSup b4: AdjsEmLvl b3: AutoTestCap b2: SwitchMainCG b1: MainCG b0: IntegralEmCG	7000*y+(100*xx)+58	R
Lamp Emergency Time	0 .. 254 hours	7000*y+(100*xx)+59	R
Rest	1: Extinguish Lamp	7000*y+(100*xx)+60	W (T)
Inhibit	1: Start Inhibit Mode	7000*y+(100*xx)+61	W (T)
Re-Light/Reset Inhibit	1: Cancel Inhibit Mode	7000*y+(100*xx)+62	W (T)
Start Function Test	1: Start Function Test	7000*y+(100*xx)+63	W (T)
Start Duration Test	1: Start Duration Test	7000*y+(100*xx)+64	W (T)
Address formula: y: Channel (0) xx: Ballast short address (0 .. 63)			

Register name	Possible values	Address formula	R/W
Stop Test	1: Stop Function/Duration Test	7000*y+(100*xx)+65	W (T)
Reset Function Test Done Flag	1: Reset Function Flag	7000*y+(100*xx)+66	W (T)
Reset Duration Test Done Flag	1: Reset Duration Flag	7000*y+(100*xx)+67	W (T)
Reset Lamp Time	1: Lamp Emergency Time Reset	7000*y+(100*xx)+68	W (T)
Store Test Execution Timeout	0 .. 255 days	7000*y+(100*xx)+69	RW
Store Prolong Time	0 .. 127.5 minutes	7000*y+(100*xx)+70	RW
Store Function Test Interval	0: Disabled 1 .. 255 days	7000*y+(100*xx)+71	RW
Store Duration Test Interval	0: Disabled 1 .. 97 weeks	7000*y+(100*xx)+72	RW
Store Emergency Level	0 .. 100%	7000*y+(100*xx)+73	RW
Address formula: y: Channel (0) xx: Ballast short address (0 .. 63)			

5.2.1.5. LED Ballasts (Type 6) (Modbus)

NOTICE
Read/write parameter terminology:

- **R**: Read-only register
- **W**: Write-only register
- **RW**: Read and write register
- **T**: Trigger (The register activates an action and then returns to its default value).

Register name	Possible values	Address formula	R/W
Failure Status	b7: RefMeasurFail b6: ThermLightLvl b5: ThermShut b4: CurrProtAct b3: LoadInc b2: LoadDec b1: OpenC b0: ShortC	7000*y+(100*xx)+80	R
Gear Type	b3: dcSuppPoss b2: acSuppPoss b1: LEDModInt b0: LEDPowerSInt	7000*y+(100*xx)+81	R
Dimming Curve	0: Standard Logarithmic Dim Curve 1: Linear Dim Curve	7000*y+(100*xx)+82	R
Possible Operating Modes	b3: HighCurrPulMod b2: OutCurrContr b1: AMModePoss b0: PWMModePoss	7000*y+(100*xx)+83	R
Address formula: y: Channel (0) xx: Ballast short address (0 .. 63)			

Register name	Possible values	Address formula	R/W
Features	b7: PhysicSelSupp b6: LightLvlRedReq b5: ThermShutReq b4: CurrProtActReq b3: LoadIncReq b2: LoadDecReq b1: OpenCQ b0: ShortCQ	7000*y+(100*xx)+84	R
Reference Running	0: No 1: Yes	7000*y+(100*xx)+85	R
Current Protector	0: Disabled 1: Enabled	7000*y+(100*xx)+86	R
Operating Mode	b4: NonLogDimCurveAct b3: HighCurrPulModeAct b2: OutCurrContr b1: AMModeAct b0: PWMModeAct	7000*y+(100*xx)+87	R
Fast Fade Time	0 .. 27	7000*y+(100*xx)+88	R
Min Fast Fade Time	0 .. 27	7000*y+(100*xx)+89	R
Reference System Power	1: Trigger DALI Power Referencing	7000*y+(100*xx)+90	W (T)
Enable/Disable Current Protector	0: Disable 1: Enable	7000*y+(100*xx)+91	RW
Select Dimming Curve	0: Standard Logarithmic Dim Curve 1: Linear Dim Curve	7000*y+(100*xx)+92	RW
Store Fast Fade Time	0 .. 27	7000*y+(100*xx)+93	RW
Address formula: y: Channel (0) xx: Ballast short address (0 .. 63)			

5.2.1.6. Color Control (Type 8) (Modbus)

NOTICE
Read/write parameter terminology:

- **R**: Read-only register
- **W**: Write-only register
- **RW**: Read and write register
- **T**: Trigger (The register activates an action and then returns to its default value).

NOTICE
The address formula will differ:

- For Intesis MAPS versions earlier than 1.2.24.0.
- For gateway firmware versions earlier than 2.0.4.0 in the case of BACnet, and 2.0.1.0 in the case of Modbus.

Register name	Possible values	Address formula	R/W
Store Current Level & Colour as Scene	0 .. 15	25000+(6400*y)+(100*xx)+0	W
Clear/Remove Colour from Scene	0 .. 15	25000+(6400*y)+(100*xx)+1	W
Arc Colour Level	Tc: 1000 .. 10000°K RGB: 0 .. 0xFEFEFE	25000+(6400*y)+(100*xx)+2	W
Arc Colour White Level-RGBW *For RGBW only*	W: 0 .. 100	25000+(6400*y)+(100*xx)+4	W
Colour Tc Step W/C	0: Step Cooler 1: Step Warmer	25000+(6400*y)+(100*xx)+5	W
Actual Colour Level	Tc: 1000 .. 10000°K RGB: 0 .. 0xFEFEFE	25000+(6400*y)+(100*xx)+6	R
Actual Colour White Level-RBGW *For RGBW only*	W: 0 .. 100	25000+(6400*y)+(100*xx)+8	R
Power ON Colour	Tc: 1000 .. 10000°K RGB: 0 .. 0xFEFEFE	25000+(6400*y)+(100*xx)+10	R
Power ON Colour White Level-RGBW	W: 0 .. 100	25000+(6400*y)+(100*xx)+12	R
System Fail Colour	Tc: 1000 .. 10000°K RGB: 0 .. 0xFEFEFE	25000+(6400*y)+(100*xx)+14	R
Syst Fail Colour White Level-RGBW	W: 0 .. 100	25000+(6400*y)+(100*xx)+16	R
Min Colour Range (°K)	Tc: 1000 .. 10000°K	25000+(6400*y)+(100*xx)+18	R
Max Colour Range (°K)	Tc: 1000 .. 10000°K	25000+(6400*y)+(100*xx)+20	R
Set Power ON Colour	Tc: 1000 .. 10000°K RGB: 0 .. 0xFEFEFE	25000+(6400*y)+(100*xx)+22	W
Set PWR ON Colour White Level-RGBW	W: 0 .. 100	25000+(6400*y)+(100*xx)+24	W
Set System Fail Colour	Tc: 1000 .. 10000°K RGB: 0 .. 0xFEFEFE	25000+(6400*y)+(100*xx)+26	W
Set Syst Fail Colour White Level-RGBW	W: 0 .. 100	25000+(6400*y)+(100*xx)+28	W
Set Min Colour Range (°K)	Tc: 1000 .. 10000°K	25000+(6400*y)+(100*xx)+30	W
Set Max Colour Range (°K)	Tc: 1000 .. 10000°K	25000+(6400*y)+(100*xx)+32	W
Address formula: y: Channel (0) xx: Ballast short address (0 .. 63)			

5.2.1.7. DALI Groups – Color Ballasts (Type 8) (Modbus)

NOTICE
Read/write parameter terminology:

- **R**: Read-only register
- **W**: Write-only register
- **RW**: Read and write register
- **T**: Trigger (The register activates an action and then returns to its default value).

Register name	Possible values	Address formula	R/W
Arc Colour level Tc	Tc: 1000 .. 10000°K	7000*y+(20*xx)+6416	RW
Arc Colour White level for RGBW *For RGBW only*	W: 0 .. 100	7000*y+(20*xx)+6417	RW
Colour Tc Step Warmer/Cooler	0: Step Cooler 1: Step Warmer	7000*y+(20*xx)+6418	RW
Arc Colour level RGB	RGB: 0 .. 0xFEFEFE	7000*y+(20*xx)+6419	RW
Address formula: y: Channel (0) xx: Group number (0 .. 15)			

5.2.1.8. Broadcast - Color Ballasts (Type 8) (Modbus)

NOTICE
Read/write parameter terminology:

- **R**: Read-only register
- **W**: Write-only register
- **RW**: Read and write register
- **T**: Trigger (The register activates an action and then returns to its default value).

Register name	Possible values	Address formula	R/W
Arc Colour Level Tc	Tc: 1000 .. 10000°K	7000*y+6815	RW
Arc Colour White Level for RGBW *For RGBW only*	W: 0 .. 100	7000*y+6816	RW
Colour Tc Step Warmer/Cooler	0: Step Cooler 1: Step Warmer	7000*y+6817	RW
Arc Colour Level RGB	RGB: 0 .. 0xFEFEFE	7000*y+6818	RW
Address formula: y: Channel (0)			

5.2.1.9. Energy Reporting (Type 51) (Modbus)

NOTICE
Read/write parameter terminology:

- **R**: Read-only register
- **W**: Write-only register
- **RW**: Read and write register
- **T**: Trigger (The register activates an action and then returns to its default value).

NOTICE
The address formula will differ:

- For Intesis MAPS versions earlier than 1.2.24.0.
- For gateway firmware versions earlier than 2.0.4.0 in the case of BACnet, and 2.0.1.0 in the case of Modbus.

Register name	Possible values	Address formula	R/W
Active Energy	0 .. 281474976710653 Wh	25000+(6400*y)+(100*xx)+40	R
Active Power	0 .. 4294967293 W	25000+(6400*y)+(100*xx)+42	R
Apparent Energy *Optional signal*	0 .. 281474976710653 VAh	25000+(6400*y)+(100*xx)+44	R
Apparent Power *Optional signal*	0 .. 4294967293 VA	25000+(6400*y)+(100*xx)+46	R
Active Energy Loadside *Optional signal*	0 .. 281474976710653 Wh	25000+(6400*y)+(100*xx)+48	R
Active Power Loadside *Optional signal*	0 .. 4294967293 W	25000+(6400*y)+(100*xx)+50	R
Address formula: y: Channel (0) xx: Ballast short address (0 .. 63)			

5.2.1.10. Diagnostics and Maintenance (Type 52) (Modbus)

NOTICE
Read/write parameter terminology:

- **R**: Read-only register
- **W**: Write-only register
- **RW**: Read and write register
- **T**: Trigger (The register activates an action and then returns to its default value).

NOTICE
The address formula will differ:

- For Intesis MAPS versions earlier than 1.2.24.0.
- For gateway firmware versions earlier than 2.0.4.0 in the case of BACnet, and 2.0.1.0 in the case of Modbus.

Register name	Possible values	Address formula	R/W
Control Gear Operation Time	0 .. 4294967293 seconds	25000+(6400*y)+(100*xx)+60	R
Control Gear Start Counter	0 .. 16777213	25000+(6400*y)+(100*xx)+62	R
Control Gear Temperature	-60 .. 193°C	25000+(6400*y)+(100*xx)+64	R
Control Gear Failure	bitfields 0: Overal failure 1: Ext. Supply Undervoltage 2: Ext. Supply Overvoltage 3: ECG Output Power Limit 4: Thermal derating 5: Thermal shutdown	25000+(6400*y)+(100*xx)+65	R
Light Source Start Counter Resettable	0 .. 16777213	25000+(6400*y)+(100*xx)+66	R
Light Source Set Start Counter Resettable	0 .. 16777213	25000+(6400*y)+(100*xx)+68	RW
Address formula: y: Channel (0) xx: Ballast short address (0 .. 63)			

Register name	Possible values	Address formula	R/W
Light Source Start Counter	0 .. 16777213	25000+(6400*y)+(100*xx)+70	R
Light Source On Time Resettable	0 .. 16777213 seconds	25000+(6400*y)+(100*xx)+72	R
Light Source Set On Time Resettable	0 .. 4294967293 seconds	25000+(6400*y)+(100*xx)+74	RW
Light Source On Time	0 .. 4294967293 seconds	25000+(6400*y)+(100*xx)+76	R
Light Source Temperature *Optional signal*	-60 .. 193°C	25000+(6400*y)+(100*xx)+78	R
Lamp Failure	bitfields 0: Overal failure 1: Open Circuit 2: Short Circuit 3: Thermal Derating 4: Thermal Shutdown	25000+(6400*y)+(100*xx)+79	R
Rated Median Useful Life Of Luminaire *Optional signal*	0 .. 253 (x1000 hours)	25000+(6400*y)+(100*xx)+80	R
Internal Control Gear Reference Temperature *Optional signal*	-60 .. 193°C	25000+(6400*y)+(100*xx)+81	R
Rated Median Useful Light Source Starts *Optional signal*	0 .. 65534 (x100 times)	25000+(6400*y)+(100*xx)+82	R
Address formula: y: Channel (0) xx: Ballast short address (0 .. 63)			

5.2.1.11. Area (Modbus)

NOTICE
Read/write parameter terminology:

- **R**: Read-only register
- **W**: Write-only register
- **RW**: Read and write register
- **T**: Trigger (The register activates an action and then returns to its default value).

Register name	Possible values	Address formula	R/W
Occupancy State	0: Vacant 1: Occupied 2: Transition 3: Unknown	7000*y+6840+(9*x)+0	R
Light Average	Average readings of the sensors in the area	7000*y+6840+(9*x)+1	R
Daylight Scene Active	0: Inactive 1: Active	7000*y+6840+(9*x)+2	R
Address formula: y: Channel (0) x: Area index (0 .. 16)			

5.2.1.12. Input Devices (Modbus)

NOTICE
Read/write parameter terminology:

- **R**: Read-only register
- **W**: Write-only register
- **RW**: Read and write register
- **T**: Trigger (The register activates an action and then returns to its default value).

Register name	Possible values	Address formula	R/W
Occupancy Input Value	0: Vacant + No Mov 1: Vacant + Mov 2: Occupied + No Mov 3: Occupied + Mov	14000+(640*y)+(10*x)+z+SI*1280	R
Light Input Value	Lux	14000+(640*y)+(10*x)+z+SI*1280	R
Push Buttons-Events	**As an input value register:** 0: Released 1: Pressed **As an event bitfields register:** b0: Button released b1: Button pressed b2: Short press b3: Double press b4: Long press start b5: Long press repeat b6: Long press stop	14000+(640*y)+(10*x)+z+SI*1280	R
Push Buttons-Button Stuck	0: Button free 1: Button stuck	14000+(640*y)+(10*x)+z+SI*1280	R
Absolute Input	Percent: 0 .. 100% Absolute value: 0 .. (2^resolution -1)	14000+(640*y)+(10*x)+z+SI*1280	R
Input Device Comm Error Bit Fields CH1 (ID 15 - ID 0)	0: OK 1: Comm error b*i* [*i*=xx-(16*(y-1))]	13992	R
Input Device Cerror Bit Fields CH1 (ID 31 - ID 16)	0: OK 1: Comm error b*i* [*i*=xx-(16*(y-1))]	13993	R
Input Device Comm Error Bit Fields CH1 (ID 47 - ID 32)	0: OK 1: Comm error b*i* [*i*=xx-(16*(y-1))]	13994	R
Input Device Comm Error Bit Fields CH1 (ID 63 - ID 48)	0: OK 1: Comm error b*i* [*i*=xx-(16*(y-1))]	13995	R
Address formula: y: Channel (0) x: Input device index (0 .. 63) z: Instance index (0 .. 9) SI: Signal index (0 .. 7)			

Register name	Possible values	Address formula	R/W
Input Device Comm Error Bit Fields CH2 (ID 15 - ID 0)	0: OK 1: Comm error b*i* [*i*=xx-(16*(y-1))]	13996	R
Input Device Comm Error Bit Fields CH2 (ID 31 - ID 16)	0: OK 1: Comm error b*i* [*i*=xx-(16*(y-1))]	13997	R
Input Device Comm Error Bit Fields CH2 (ID 47 - ID 32)	0: OK 1: Comm error b*i* [*i*=xx-(16*(y-1))]	13998	R
Input Device Comm Error Bit Fields CH2 (ID 63 - ID 48)	0: OK 1: Comm error b*i* [*i*=xx-(16*(y-1))]	13999	R
Address formula: y: Channel (0) x: Input device index (0 .. 63) z: Instance index (0 .. 9) SI: Signal index (0 .. 7)			

6. Late Configuration: Change the Gateway's Protocol

Reconfiguring the gateway with a different protocol is very easy:

1. Connect the gateway to the computer and open the configuration tool Intesis MAPS.
2. Select the new template you need.
3. Click **Next** or double-click the template in the list.
4. A message will pop up, asking if you want to save the project currently loaded in the gateway.
5. Click **Yes** or **No**, depending on your needs.
6. Configure the needed parameters and signals for your new project.
7. Send the configuration to the gateway.

NOTE
To know more about the gateway configuration, consult the Intesis MAPS Guide for IN703DAL0640000.