ENGLISH

700 Series Air Gateway - IN775FGL***O000

FUJITSU VRF SYSTEMS
to Modbus, KNX, BACnet, MQTT, and Home Automation

USER MANUAL
Version 1.0.15
Publication date 2025-12-09

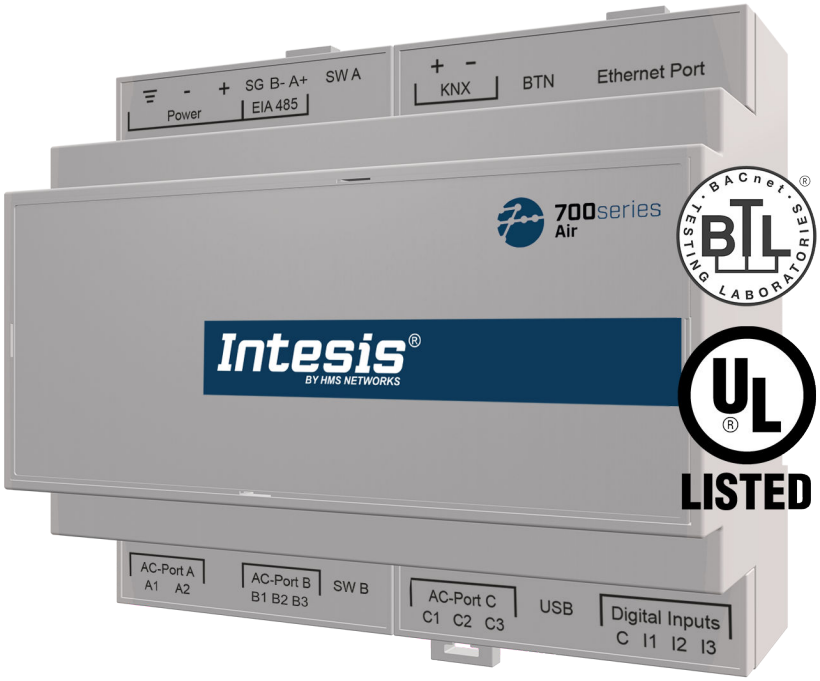

14 rue Edouard Petit
42000 St-Etienne
Tel : +33 477 92 03 56
Email : contact@rg2i.com
www.rg2i.com

Copyright © 2025 Intesis

Disclaimer

The information in this document is for informational purposes only. Please inform HMS Networks of any inaccuracies or omissions found in this document. HMS Networks disclaims any responsibility or liability for any errors that may appear in this document.

HMS Networks reserves the right to modify its products in line with its policy of continuous product development. The information in this document shall therefore not be construed as a commitment on the part of HMS Networks and is subject to change without notice. HMS Networks makes no commitment to update or keep current the information in this document.

The data, examples and illustrations found in this document are included for illustrative purposes and are only intended to help improve understanding of the functionality and handling of the product. In view of the wide range of possible applications of the product, and because of the many variables and requirements associated with any particular implementation, HMS Networks cannot assume responsibility or liability for actual use based on the data, examples or illustrations included in this document nor for any damages incurred during installation of the product. Those responsible for the use of the product must acquire sufficient knowledge in order to ensure that the product is used correctly in their specific application and that the application meets all performance and safety requirements including any applicable laws, regulations, codes and standards. Further, HMS Networks will under no circumstances assume liability or responsibility for any problems that may arise as a result from the use of undocumented features or functional side effects found outside the documented scope of the product. The effects caused by any direct or indirect use of such aspects of the product are undefined and may include e.g. compatibility issues and stability issues.

Table of Contents

1. Description, Compatible AC systems, and Order Codes 1

2. Licensing 2

3. General Information 3

3.1. Intended Use of the User Manual 3
3.2. General Safety Information 3
3.3. Admonition Messages and Symbols 4

4. Overview 5

4.1. Inside the Package 7
4.2. Main Features 7
4.3. Gateway General Functionality 7

5. Quick Start Guide 8

6. Hardware 9

6.1. Mounting 9
6.2. Connection 11
6.2.1. Gateway Connectors 11
6.2.2. Connection to the Power Supply 13
6.2.3. Connection to the AC Unit 14
6.2.4. Connection to Modbus 14
6.2.5. Connection to KNX 15
6.2.6. Connection to BACnet 16
6.2.7. Connection to MQTT 17
6.2.8. Connection to Home Automation 17
6.2.9. Connection to a Computer for Configuration 18
6.2.10. Connection to Energy Meters (Digital Inputs) 18
6.3. Gateway Layout 19
6.4. LED Indicators 20
6.5. DIP Switches 21
6.6. Push Button 21
6.7. Technical Specifications 22
6.8. Dimensions 23

7. Available Protocol Combinations 24

7.1. Integration into Modbus Systems 24
7.1.1. Modbus Registers 24
7.2. Integration into KNX Systems 27
7.2.1. KNX Signals 27
7.3. Integration into BACnet Systems 33
7.3.1. BACnet Objects 33
7.4. Integration into MQTT Systems 37
7.4.1. MQTT Topics 37
7.5. Integration into Home Automation Systems 40
7.5.1. Home Automation Signals 40

8. Late Configuration: Change the Gateway's Protocol 41

9. Error Codes 42

1. Description, Compatible AC systems, and Order Codes

IN775FGL*O000 Gateway**.

Modbus®, KNX®, BACnet®, MQTT, and Home Automation gateway for Fujitsu® HVAC systems.

This gateway is compatible with VRF units commercialized by Fujitsu.

Use the compatibility tool to get a complete list of compatible units: https://compatibility.intesis.com/

You can set up this Intesis gateway for Modbus TCP, Modbus RTU, KNX TP, BACnet/IP, BACnet MS/TP, MQTT, or Home Automation.

ORDER CODE	LEGACY ORDER CODE
IN775FGL***O000	INMBSFGL016O000 INKNXFGL016O000
[1] *** stands for XXS, 00S, or 00M, depending on the license you have purchased. To know more, see Licensing (page 2).	

NOTE
The order code may vary depending on the product seller and the buyer's location.

2. Licensing

Distribution license(s) for the IN775FGL∗∗∗O000 gateway:

Order Code	License	Maximum AC units	
		Indoor units	Outdoor units
IN775FGLXXSO000	XXS	4	4
IN775FGL00SO000	Small	16	12
IN775FGL00MO000	Medium	64	12

NOTE
The order code may vary depending on the product seller and the buyer's location.

3. General Information

3.1. Intended Use of the User Manual

This manual contains the main features of this Intesis gateway and the instructions for its appropriate installation, configuration, and operation.

Any person who installs, configures, or operates this gateway or any associated equipment should be aware of this manual's contents.

Keep this manual for future reference during the installation, configuration, and operation.

3.2. General Safety Information

IMPORTANT
Follow these instructions carefully. Improper work may seriously harm your health and damage the gateway and/or any other equipment connected to it.

Only technical personnel, following these instructions and the country legislation for installing electrical equipment, can install and manipulate this gateway.

Install this gateway indoors, in a restricted access location, avoiding exposure to direct solar radiation, water, high relative humidity, or dust.

Preferably, mount this gateway on a DIN rail inside a grounded metallic cabinet, following the instructions in this manual.

If mounting on a wall, firmly fix this gateway on a non-vibrating surface, following the instructions in this manual.

Connect this gateway only to networks without routing to the outside plant.

All communication ports are considered for indoor use and must only be connected to SELV circuits.

Disconnect all systems from power before manipulating and connecting them to the gateway.

Use SELV-rated NEC class 2 or limited power source (LPS) power supply.

CAUTION
To avoid earth loops that can damage the gateway and/or any other equipment connected to it, we strongly recommend:

- The use of DC power supplies, floating or with the negative terminal connected to earth. **Never use a DC power supply with a positive terminal connected to earth**.
- The use of AC power supplies only if they are floating and not powering any other device.

Use a circuit breaker between the gateway and the power supply. Rating: 250 V, 6 A.

Supply the correct voltage to power the gateway. The admitted range is detailed in the technical specifications table.

Respect the expected polarity of power and communication cables when connecting them to the gateway.

This Intesis gateway is designed for installation in an enclosure. When the device is mounted outside an enclosure, precautions should be taken to avoid electrostatic discharges to the unit in environments with static levels above 4 kV. When working in an enclosure (e.g., making adjustments, setting switches, etc.), typical anti-static precautions should be observed before touching the unit.

Binary inputs are potential-free contacts. Do not connect any voltage.

These safety instructions in other languages can be found here.

3.3. Admonition Messages and Symbols

CAUTION
Instruction that must be followed to avoid a potentially hazardous situation that, if not avoided, could result in minor or moderate injury.

IMPORTANT
Instruction that must be followed to avoid a risk of reduced functionality and/or damage to the equipment or to avoid a network security risk.

NOTE
Additional information which may facilitate installation and/or operation.

TIP
Helpful advice and suggestions.

NOTICE
Remarkable Information.

4. Overview

Protocol combinations supported by the IN775FGL∗∗∗O000 gateway:

Gateway's client interface	↔	Gateway's server interface
Fujitsu VRF systems	to	Modbus TCP and RTU
		KNX TP
		BACnet/IP or MS/TP
		MQTT
		Home Automation

IMPORTANT
This document assumes that the user is familiar with these technologies.

Figure 1. Integration of Fujitsu units into Modbus systems

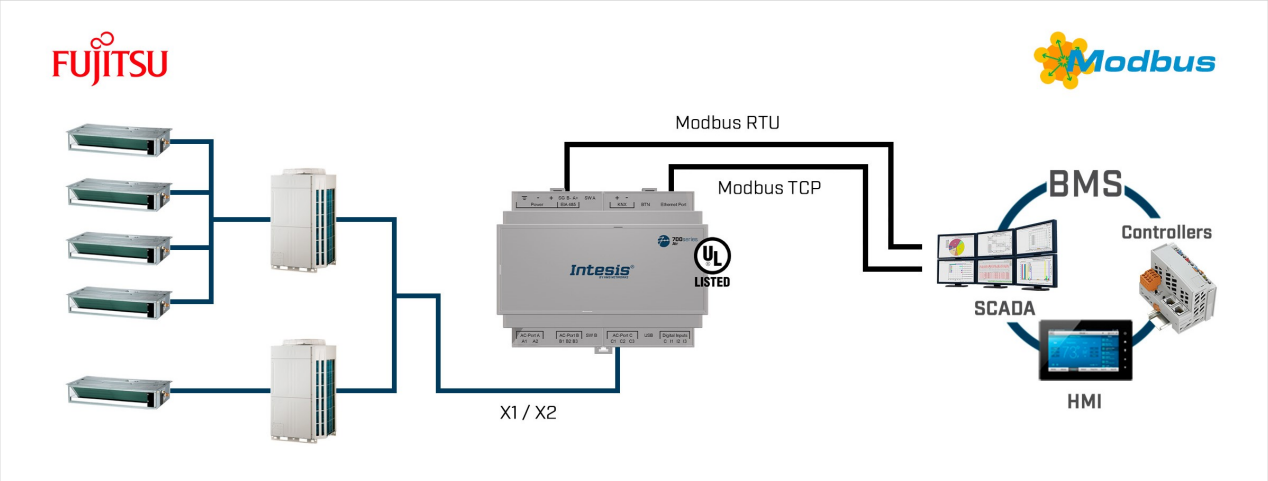

Figure 2. Integration of Fujitsu units into KNX TP systems

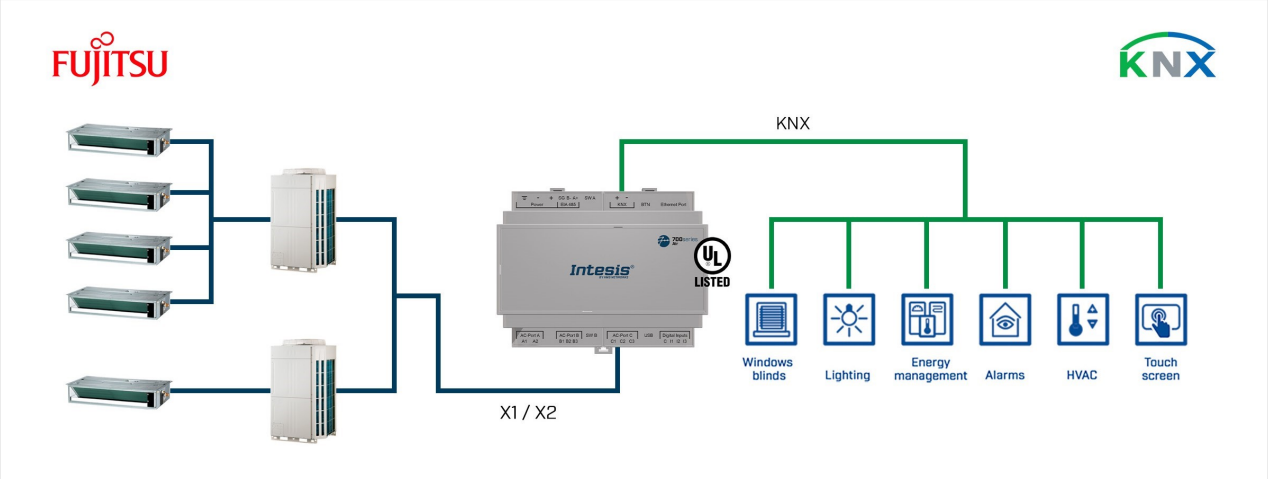

Figure 3. Integration of Fujitsu units into BACnet systems

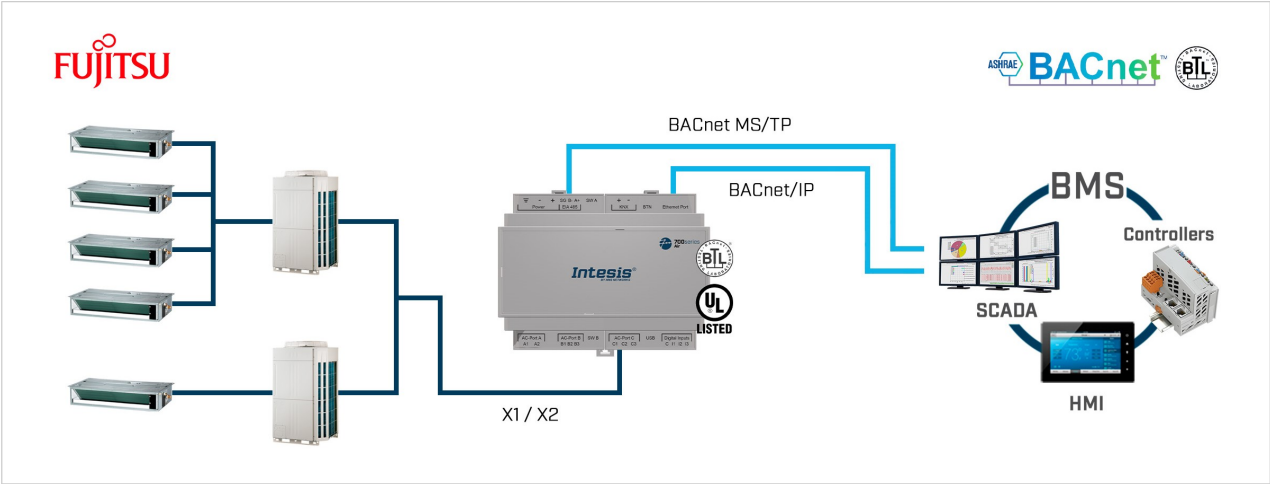

Figure 4. Integration of Fujitsu units into MQTT systems

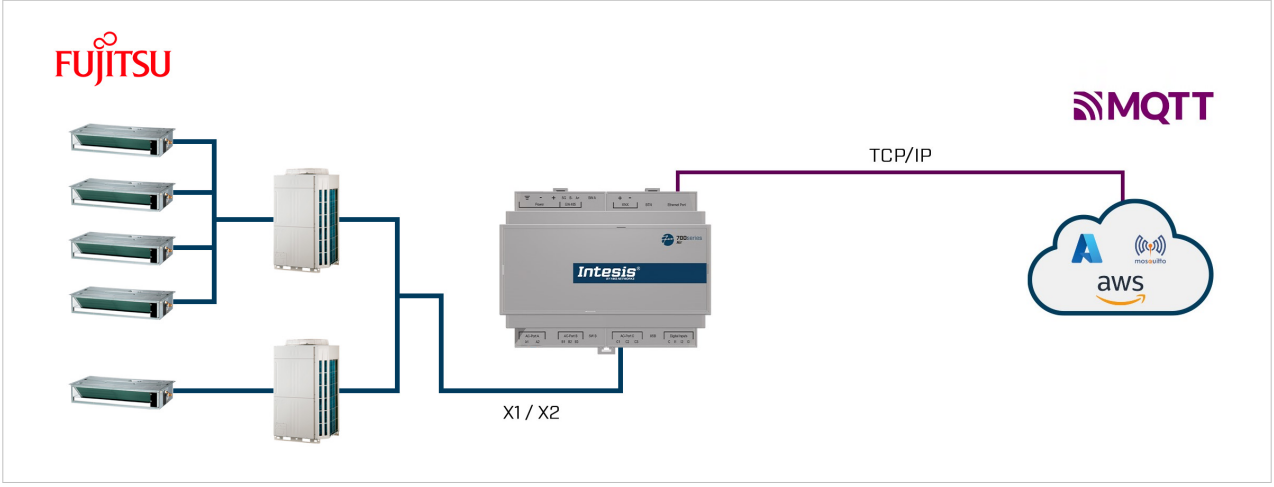

Figure 5. Integration of Fujitsu units into Home Automation systems

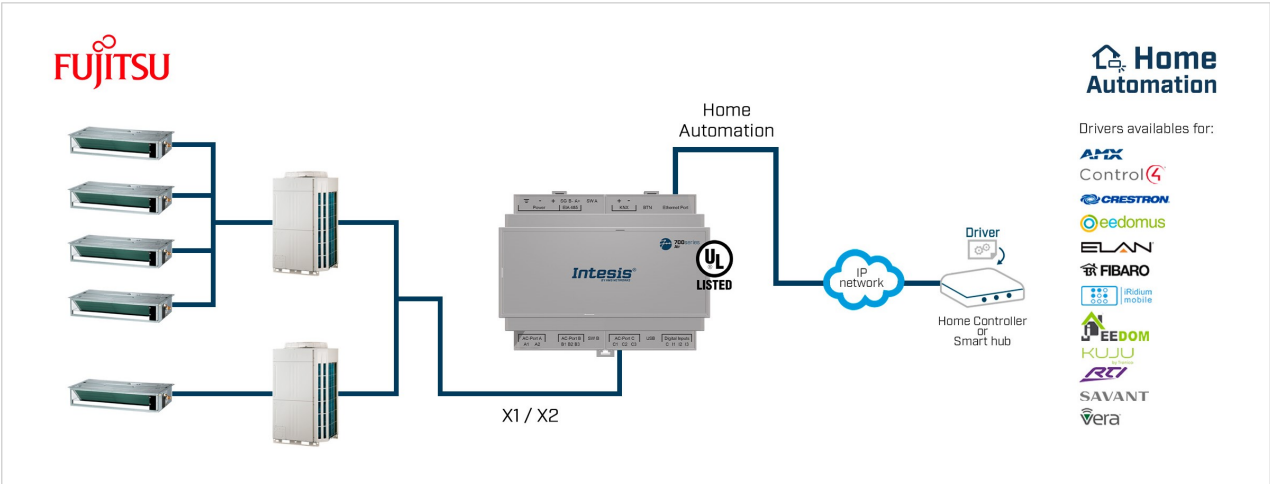

4.1. Inside the Package

ITEMS INCLUDED

- Intesis IN775FGL∗∗∗O000 Gateway
- Installation guide

4.2. Main Features

- Several protocol combinations available: Configurable for Modbus TCP and RTU, KNX TP, BACnet/IP and MS/TP, MQTT, and Home Automation communication protocols.
- Late configuration: Change between protocol combinations easily.
- Three licenses with different capacities.
- Scan function: Find the AC units connected to the air conditioning bus.
- Specific signals to monitor outdoor units.
- 2 x DIP switches for the EIA-485 connector termination and polarization configuration.
- 14 LEDs indicate the operating status for both the gateway and the communication bus.
- DIN rail and wall mounting case.
- Accredited with the main certifications for electronic equipment.
- Three binary inputs to integrate energy meters.
- Multiple ports for serial and TCP/IP communication:
  - Green pluggable terminal block for EIA-485 (3 poles)
  - Orange pluggable terminal block for KNX (2 poles)
  - Ethernet
  - Green pluggable terminal block for binary inputs (4 poles)
  - USB Type-C port for connection to the PC
  - Green pluggable terminal block for AC connection (2 poles)
  - Green pluggable terminal block for AC connection (3 poles)
  - Green pluggable terminal block for AC connection (3 poles)

4.3. Gateway General Functionality

With this Intesis IN775FGL∗∗∗O000 gateway, you can easily integrate Fujitsu systems into an installation based on Modbus TCP, Modbus RTU, KNX TP, BACnet/IP, BACnet MS/TP, MQTT, or Home Automation. To do so, the gateway acts as a server device of the installation itself, accessing all signals from each unit and allowing control of the whole HVAC network.

The gateway continuously polls the HVAC network, storing in its memory the current status of every signal you want to track and serving this data to the installation when requested. When a signal status changes, the gateway communicates it to the installation, waits for the response, and performs the corresponding action.

A signal's lack of response activates a communication error, allowing you to determine which signal from which unit is not working correctly.

5. Quick Start Guide

IMPORTANT
While the following procedure outlines the fundamental steps for installing, wiring, and configuring the gateway, it is crucial to thoroughly review all documentation to prevent errors.

1. Install Intesis MAPS on your laptop. Use the setup program supplied and follow the instructions given by the installation wizard.
2. Mount the gateway at the desired installation site. The gateway can be mounted on a DIN rail or on a wall. Mounting the gateway on a DIN rail inside a metallic industrial cabinet grounded to earth is recommended. See Mounting (page 9).
3. Disconnect all systems from power before wiring the gateway.
4. Connect the BMS communication wires to the gateway. See Gateway Connectors (page 11).
   a. If using Modbus TCP, BACnet/IP, MQTT, or Home Automation, connect the communication cable coming from the Modbus/BACnet/MQTT/Home Automation network to the port marked as **Ethernet** on the gateway.
   b. If using Modbus RTU or BACnet MS/TP, connect the communication cables coming from the Modbus/BACnet network to the port marked as **EIA 485** on the gateway.
   c. If using KNX TP, connect the communication cables coming from the KNX network to the port marked as **KNX** on the gateway.
5. Connect the communication cable from the Fujitsu system to the port marked as **AC-Port C** on the gateway.
6. Power the gateway. The supply voltage can be from 12 to 36 VDC or just 24 VAC. Observe the polarity. See Connection to the Power Supply (page 13).
7. Connect the gateway to your laptop to configure it with Intesis MAPS. See Connection to a Computer for Configuration (page 18).
   a. If you want to connect via USB, connect a USB cable from the laptop to the port marked as **USB** on the gateway.
   b. If you want to connect via IP, connect the Ethernet cable from the laptop to the port marked as **Ethernet Port** on the gateway.

   NOTICE
   Using a switch may be necessary if both TCP/IP communication and gateway configuration are to be performed via the Ethernet port. See Overview (page 5).

8. Open Intesis MAPS and create a new project by selecting the needed project template.
9. Modify the configuration as needed, save it, and send the configuration file to the gateway.
   Consult the Intesis MAPS guide for Fujitsu.
10. Go to the **Diagnostic** tab and check the communication activity between the gateway, the BMS, and the Fujitsu systems. If there is no communication activity, check that all systems are operative, the wiring of all devices is right, and the configuration of the gateway is correct.

6. Hardware

6.1. Mounting

IMPORTANT
Before mounting, please ensure that the chosen installation place preserves the gateway from direct solar radiation, water, high relative humidity, or dust.

NOTE
Mount the gateway on a wall or over a DIN rail. We recommend the DIN rail mounting option, preferably inside a grounded metallic industrial cabinet.

IMPORTANT
Ensure the gateway has sufficient clearances for all connections when mounted. See Dimensions (page 23).

DIN RAIL MOUNTING

Keep the clips in their original position.

1. Fit the gateway's top-side clips in the upper edge of the DIN rail.
2. Press the low side of the gateway gently to lock it in the DIN rail.
3. Make sure the gateway is firmly fixed.

NOTE
For some DIN rails, to complete step 2, you may need a small screwdriver or similar to pull the bottom clip down.

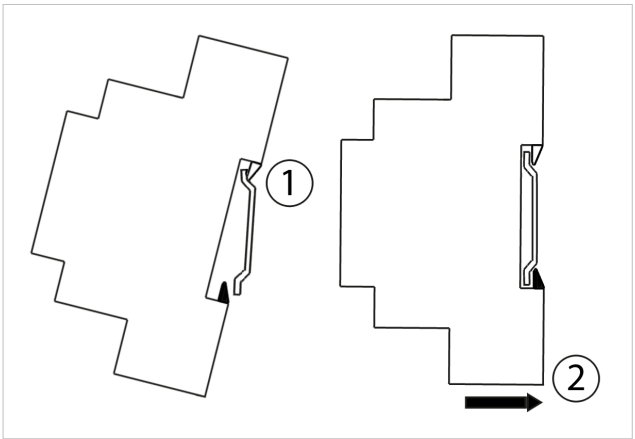

WALL MOUNTING

IMPORTANT
For reasons of security, the maximum height for wall mounting is two meters (6.5 feet).

1. Press the top-side mobile clips in the rear panel until you hear a *click*.

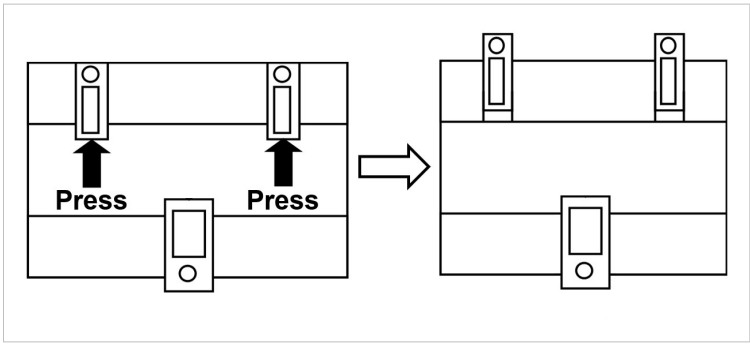

2. Use the clip holes to fix the gateway on the wall using screws.

NOTE
Use M3 screws, 25 mm (1") length.

3. Make sure the gateway is firmly fixed.

6.2. Connection

CAUTION
Disconnect all systems from power before manipulating and connecting them to the gateway.

IMPORTANT
Keep communication cables away from power and ground wires.

NOTE
Mount the gateway in the desired place before wiring it.

6.2.1. Gateway Connectors

Figure 6. Wiring diagram

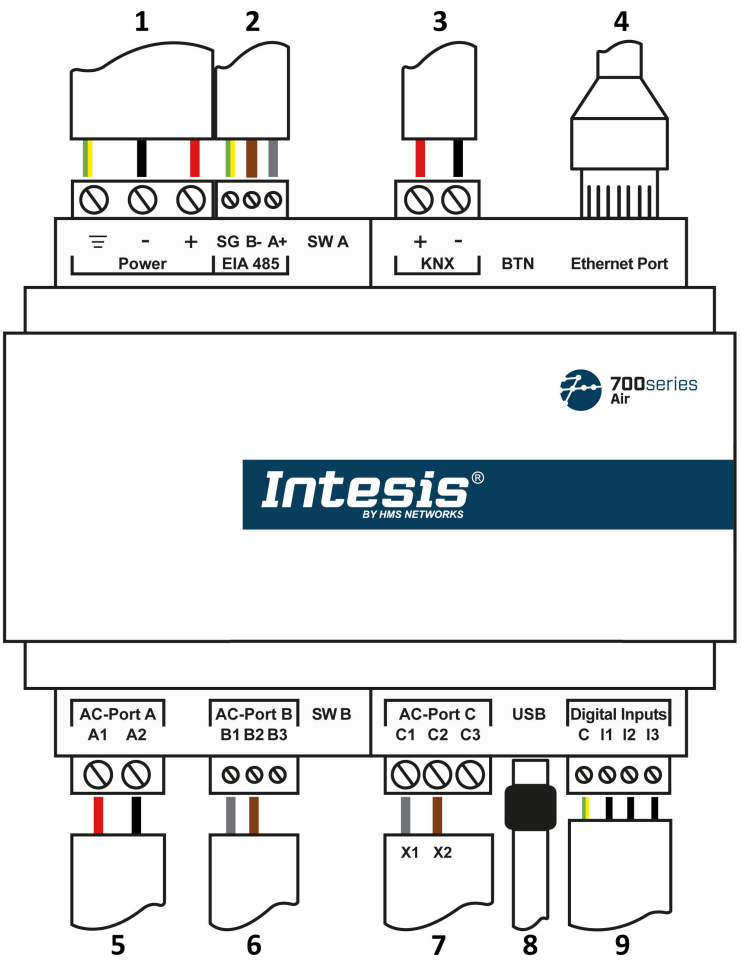

1. **Power Supply** (12-36 VDC / 24 VAC)
2. **Port EIA-485**
3. **Port KNX**
4. **Ethernet**
5. **Not used**
6. **Not used**
7. **Fujitsu** (X1/X2)
8. **Console**
9. **Binary inputs (dry contact)** optional

WIRING THE CONNECTORS

IMPORTANT
For all connectors, use solid or stranded wires (twisted or with ferrule).

Cross-section/gauge per terminal:

- One core: 0.2..2.5 mm^2 / 24..11 AWG
- Two cores: 0.2..1.5 mm^2 / 24..15 AWG
- Three cores: Not permitted

NOTE
To know more about each port's specifications, see Technical Specifications (page 22).

TIP
Terminal block connectors can be unplugged to facilitate the wiring process.

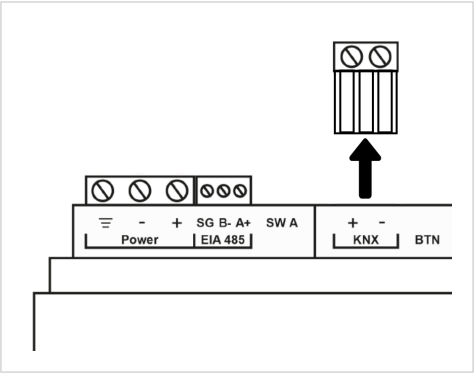

COMMUNICATION PORTS

PORT	USAGE	WIRING			
EIA-485	BACnet MS/TP and Modbus RTU	**SG**: Signal ground	**B-**	**A+**	
KNX	KNX bus	**+**		**-**	
Ethernet	**As a TCP/IP port**: BACnet/IP, Modbus TCP, MQTT, and Home Automation **As a console port**: Connection to a computer for configuration purposes	Ethernet cable (CAT5 or higher) When using the building LAN, contact the network administrator and make sure traffic is allowed. When starting up the gateway for the first time, DHCP will be enabled for 30 seconds. After that time, the default IP 192.168.100.246 will be set.			
AC-Port A	*Not used*				
AC-Port B	*Not used*				
AC-Port C No polarity to observe	Fujitsu bus	**C1**: X1	**C2**: X2	C3: *Not used*	
USB	Connection to a computer for configuration purposes	USB Type-C			
Digital Inputs	Dry contact for metering devices	**C**: Common	**I1**: Input 1	**I2**: Input 2	**I3**: Input 3

6.2.2. Connection to the Power Supply

The power supply connector is a green pluggable terminal block (three poles) labeled as **Power**.

Apply the voltage within the admitted range and of enough power:

- **For DC**: 12..36 VDC (±10%), Max: 250 mA
- **For AC**: 24 VAC (±10%), 50-60 Hz, Max: 127 mA

NOTE
Recommended voltage: 24 VDC, Max: 127 mA

IMPORTANT
Use a circuit breaker between the gateway and the power supply. Rating: 250 V, 6 A.

IMPORTANT
- **When using a DC power supply:** Respect the polarity labeled on the power connector for the positive and negative wires.
- **When using an AC power supply:** Ensure the same power supply is not powering any other device.

IMPORTANT
- Use SELV-rated NEC class 2 or limited power source (LPS) power supply.
- Respect the polarity.
- Connect the gateway's ground terminal ⏚ to the installation grounding.

IMPORTANT
To avoid earth loops that can damage the gateway and/or any other equipment connected to it, we strongly recommend:

- The use of DC power supplies, floating or with the negative terminal connected to earth.
- The use of AC power supplies only if they are floating and not powering any other device.

CAUTION
Never use a DC power supply with a positive terminal connected to earth.

6.2.3. Connection to the AC Unit

Connect the Fujitsu air conditioning network bus (X1/X2) to the gateway using the **C1** and **C2** poles of the **AC-Port C**.

NOTE
There is no polarity to observe.

NOTE
See the Wiring diagram (page 11).

6.2.4. Connection to Modbus

FOR MODBUS TCP

Connect the Modbus TCP Ethernet cable to the gateway's **Ethernet Port**.

NOTE
The gateway features a temporary DHCP mode that is enabled for 30 seconds when an Ethernet link is detected, provided the gateway still has its factory settings or has been factory reset. During this time, if the gateway is connected to a DHCP-enabled network, the server will assign it a dynamic IP address. If no DHCP server is available, the default IP address 192.168.100.246 will be automatically assigned after 30 seconds.

IMPORTANT
If communicating through the LAN of the building, contact the network administrator and make sure traffic on the used port is allowed through all LAN paths.

FOR MODBUS RTU

Connect the Modbus RTU communication cable to the gateway's **EIA-485** port.

IMPORTANT
Observe polarity.

IMPORTANT
Observe the standard restrictions of the EIA-485 bus:

- Maximum distance of 1200 meters (0.75 miles).
- Maximum of 32 devices connected to the bus.
- A 120 ohms (Ω) termination resistor is needed at each end of the bus. The gateway has an internal bus biasing circuit incorporating the termination resistor. It can be enabled using the DIP switch block (**SW A**) dedicated to the **EIA-485** port:
  Position 1
  - ON: 120 Ω termination active.
  - OFF: 120 Ω termination inactive.

  Positions 2 and 3
  - ON: Polarization active.
  - OFF: Polarization inactive.

  For further details, see DIP Switches (page 21).

To know more, refer to the document Polarity Issues in RS485 Networks.

IMPORTANT
When installing the gateway at the end of the bus with the termination resistor enabled, do not install an additional termination resistor at that end.

NOTE
See the Wiring diagram (page 11).

6.2.5. Connection to KNX

Connect the KNX TP communication cable to the gateway's **KNX** port.

IMPORTANT
Observe polarity.

NOTE
See the Wiring diagram (page 11).

6.2.6. Connection to BACnet

FOR BACNET/IP

Connect the BACnet/IP Ethernet cable to the gateway's **Ethernet Port**.

NOTE
The gateway features a temporary DHCP mode that is enabled for 30 seconds when an Ethernet link is detected, provided the gateway still has its factory settings or has been factory reset. During this time, if the gateway is connected to a DHCP-enabled network, the server will assign it a dynamic IP address. If no DHCP server is available, the default IP address 192.168.100.246 will be automatically assigned after 30 seconds.

IMPORTANT
If communicating through the LAN of the building, contact the network administrator and make sure traffic on the used port is allowed through all LAN paths.

FOR BACNET MS/TP

Connect the BACnet MS/TP communication cable to the gateway's **EIA-485** port.

IMPORTANT
Observe polarity.

IMPORTANT
Observe the standard restrictions of the EIA-485 bus:

- Maximum distance of 1200 meters (0.75 miles).
- Maximum of 32 devices connected to the bus.
- A 120 ohms (Ω) termination resistor is needed at each end of the bus. The gateway has an internal bus biasing circuit incorporating the termination resistor. It can be enabled using the DIP switch block (**SW A**) dedicated to the **EIA-485** port:
  Position 1
  - ON: 120 Ω termination active.
  - OFF: 120 Ω termination inactive.

  Positions 2 and 3
  - ON: Polarization active.
  - OFF: Polarization inactive.

  For further details, see DIP Switches (page 21).

To know more, refer to the document Polarity Issues in RS485 Networks.

IMPORTANT
When installing the gateway at the end of the bus with the termination resistor enabled, do not install an additional termination resistor at that end.

NOTE
See the Wiring diagram (page 11).

6.2.7. Connection to MQTT

Connect an Ethernet cable from your network to the gateway's **Ethernet Port**.

NOTE
When commissioning the gateway for the first time, DHCP will be enabled for 30 seconds. During that time, if there is a DHCP server, an IP address will be automatically assigned to the gateway. After that time, the default IP address 192.168.100.246 will be automatically set.

IMPORTANT
If communicating through the LAN of the building, contact the network administrator and make sure traffic on the used port is allowed through all LAN paths.

NOTE
See the Wiring diagram (page 11).

6.2.8. Connection to Home Automation

Connect the Home Automation Ethernet cable to the gateway's **Ethernet Port**.

NOTE
When commissioning the gateway for the first time, DHCP will be enabled for 30 seconds. During that time, if there is a DHCP server, an IP address will be automatically assigned to the gateway. After that time, the default IP address 192.168.100.246 will be automatically set.

IMPORTANT
If communicating through the LAN of the building, contact the network administrator and make sure traffic on the used port is allowed through all LAN paths.

NOTE
See the Wiring diagram (page 11).

6.2.9. Connection to a Computer for Configuration

Use a USB Type-C cable (not supplied) to connect the gateway through its **USB** port to a computer to configure it with Intesis MAPS.

NOTE
You can use the **Ethernet Port** to connect the gateway and the computer instead.

NOTE
To know more about the gateway configuration, consult the Intesis MAPS Guide for Fujitsu.

NOTE
See the Wiring diagram (page 11).

6.2.10. Connection to Energy Meters (Digital Inputs)

The **Digital Inputs** connector is a green pluggable terminal block (four poles) placed at the bottom right side of the gateway.

IMPORTANT
The **Digital Inputs** connector is a potential-free contact for energy metering only. It does not support any other kind of third-party elements.

NOTE
See the Wiring diagram (page 11).

6.3. Gateway Layout

Figure 7. Disposition of hardware elements in the gateway

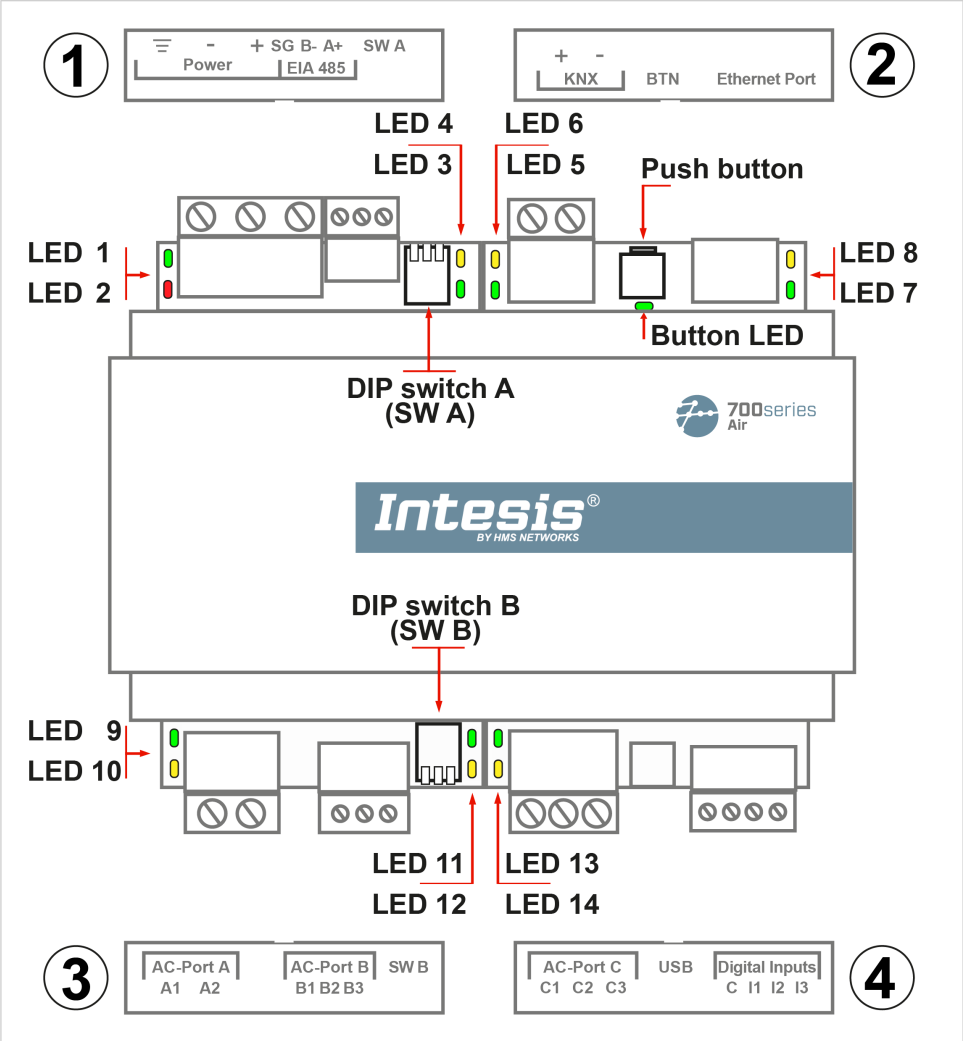

NOTICE
Plastic covers numbered in the image as ①, ②, ③, and ④ can be easily disassembled by inserting a small flat-head screwdriver into the designated notch, located on the edge closest to the gateway's main body, and gently prying to disengage them.

NOTE
LEDs and DIP switches are hidden behind the removable plastic covers and can only be accessed by disassembling the covers.

The following sections explain each element in more detail: LEDs, DIP switches, and the push button.

6.4. LED Indicators

Table 1. LEDs location and behavior

Cover	LED	Color	Description
Top side			
Under frontal cover ①	LED 1 (PWR)	Green	Power on (not programmable)
	LED 2 (ERR)	Red	Blinking: Hardware error
	LED 3	Green	485 Tx (RS485 for BACnet or Modbus)
	LED 4	Yellow	485 Rx (RS485 for BACnet or Modbus)
Under frontal cover ②	LED 5	Green	KNX Port Tx
	LED 6	Yellow	KNX Port Rx
	BUTTON LED	Green	**KNX**: Programming mode on **BACnet**: BACnet link established **Modbus**, **MQTT**, and **Home Automation**: Not used
	LED 7	Green	Ethernet link established
	LED 8	Yellow	Ethernet speed
Bottom side			
Under frontal cover ③	LED 9	Green	AC-Port A Tx (HBS)
	LED 10	Yellow	AC-Port A Rx (HBS)
	LED 11	Green	AC-Port B Tx (RS485)
	LED 12	Yellow	AC-Port B Rx (RS485)
Under frontal cover ④	LED 13	Green	AC-Port C Tx (UFO-SLQ)
	LED 14	Yellow	AC-Port C Rx (UFO-SLQ)

NOTE

LEDs are hidden behind the four frontal labeled covers (see the figure Disposition of hardware elements in the gateway (page 19)). These covers are pressure-fitted, so they can be removed simply by pulling. The recommended method is to insert a small flat-head screwdriver into the designated notch—located on the edge closest to the gateway's main body—and gently pry to disengage the cover.

6.5. DIP Switches

The gateway has two DIP switches (see the figure Disposition of hardware elements in the gateway (page 19)):

- DIP switch A (SW A)
- DIP switch B (SW B)

Each DIP switch is dedicated to a 485 port, and its function is to activate or deactivate the termination resistor (position 1) and the polarization (positions 2 and 3) of each port.

Position			Description
1	2	3	
OFF	X	X	120 Ω termination inactive
ON	X	X	120 Ω Termination active
X	OFF	OFF	Polarization inactive
X	ON	ON	Polarization active

IMPORTANT
Observe the **ON** indicator on the DIP switch as a reference.

NOTE
Default positions are:

- DIP switch A (SW A): **OFF, OFF, OFF** (120 Ω termination and polarization inactive)
- DIP switch B (SW B): **OFF, OFF, OFF** (120 Ω termination and polarization inactive)

6.6. Push Button

Find the push button on the top side, between the KNX and the Ethernet connectors (see the figure Disposition of hardware elements in the gateway (page 19)).

NOTE
The button is hidden and only accessible using a thin object like a paper clip.

Common functionality:

RESET FACTORY SETTINGS

IMPORTANT
This action will restore the gateway to its original state, erasing all project data and settings.

1. Push the button.
2. Power on the gateway.
3. Wait four seconds.
4. Release the button.

Functionalities depending on the current project:

- **BACnet**: Push the button to send an I-Am message to all BACnet ports.

- **KNX**: Push the button to switch between normal mode and programming mode.

6.7. Technical Specifications

Housing	Plastic, type PC (UL 94 V-0). Color: Light Grey. RAL 7035 Net dimensions (HxWxD): Millimeters: 90 x 106 x 58 mm / Inches: 3.5 x 4.2 x 2.3" Protection: IP20	
Mounting	Wall: Use M3 25 mm (1") length screws. Secure mounting: below 2 meters (6 feet) DIN rail (recommended mounting) EN60715 TH35	
Wires (for power supply and low-voltage signals)	Wire cross-section/gauge per terminal: One core: 0.2..2.5 mm^2 (24..14 AWG) Two cores: 0.2..1.5 mm^2 (24..16 AWG) Three cores: Not permitted Use solid or stranded wires (twisted or with ferrule). For distances longer than 3.05 meters (10 feet), use class 2 cables	
Power	1 x Green pluggable terminal block (3 poles) 12 to 36 VDC +/-10%, Max.: 250 mA 24 VAC +/-10% 50-60 Hz, Max.: 127 mA Recommended: 24 VDC, Max.: 127 mA	
Ethernet	1 x Ethernet 10/100 Mbps RJ45	
Port EIA 485	1 x Green pluggable terminal block (3 poles) SGND (Reference ground or shield)	
Port KNX	1 x Orange pluggable terminal block (2 poles): A, B	
AC Ports	AC-Port A (serial, 2 poles): Not used AC-Port B (serial, 3 poles): Not used AC-Port C: (serial, 3 poles): AC bus connection (X1/X2)	
LEDs	2 x Run (Power/Error) 2 x Port EIA-485 TX/RX 2 x Port KNX TX/TR 1 x Button indicator	2 x Ethernet Link/Speed 2 x AC-Port A TX/RX 2 x AC-Port B TX/RX 2 x AC-Port C TX/RX
Binary inputs	1 x Green pluggable terminal block (4 poles) I1, I2, I3, and Common	
Console port	USB Type-C compliant	
DIP switches	**SW A** Position 1: On: 120 Ω termination active Off: 120 Ω termination inactive (default) Position 2 and 3: On: Polarization active Off: Polarization inactive (default)	**SW B** Position 1: On: 120 Ω termination active Off: 120 Ω termination inactive (default) Position 2 and 3: On: Polarization active Off: Polarization inactive (default)
Push button	1 x Push button Factory reset I-Am message (for BACnet only) Normal mode/programming mode switch (for KNX only)	
Operational temperature	Celsius: 0..60°C Fahrenheit: 32..140°F	
Operational humidity	5..95%. No condensation	
Isolation between comm. ports	1000 VDC	

6.8. Dimensions

NET DIMENSIONS (HxWxD)
Millimeters: 90 x 106 x 58 mm
Inches: 3.5 x 4.2 x 2.3"

IMPORTANT
Leave enough clear space to wire the gateway easily and for the subsequent manipulation of elements, such as connectors, DIP switches, etc.

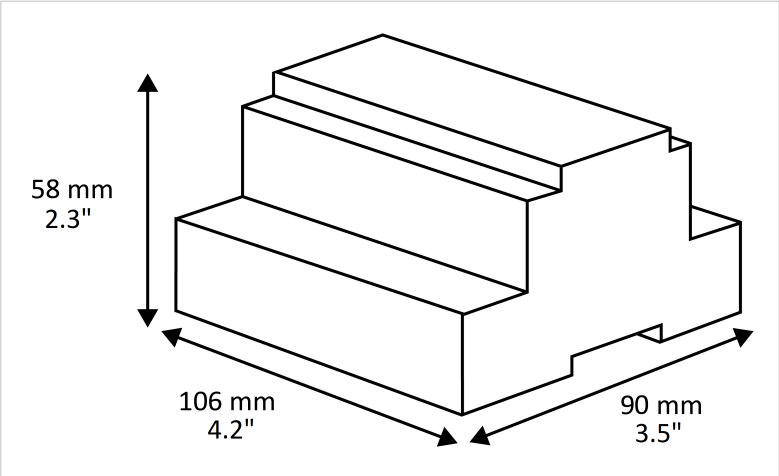

7. Available Protocol Combinations

7.1. Integration into Modbus Systems

7.1.1. Modbus Registers

NOTICE
This part is common for Modbus RTU and TCP.

Functions to read Modbus registers:

- 03 Read Holding Registers.
- 04 Read Input Registers.

Function to write Modbus registers:

- 06 Single Holding Registers.

Modbus register contents are expressed in most significant bit (MSB)..less significant bit (LSB).

The following tables list all available Modbus registers for the gateway.

NOTICE
Read/write parameter terminology:

- **R**: Read-only register
- **W**: Write-only register
- **RW**: Read and write register
- **T**: Trigger-only register

Table 2. Global signals

Register name	Possible values	Modbus address	R/W
Gateway ES	0: Disable energy saving 1: Enable energy saving	0	RW
Gateway error	0: No error 1: Error	1	R
Gateway error code	0: No error X: Error	2	R
On (all the units)	1: Set the units On	3	T
Off (all the units)	1: Set the units Off	4	T
Operation Mode Auto (all the units)	1: Set Auto Mode	5	T
Operation Mode Heat (all the units)	1: Set Heat Mode	6	T
Operation Mode Dry (all the units)	1: Set Dry Mode	7	T
Operation Mode Fan (all the units)	1: Set Fan Mode	8	T
Operation Mode Cool (all the units)	1: Set Cool Mode	9	T
Fan Speed Auto (all the units)	1: Set Fan Speed Auto	10	T
Fan Speed Quiet (all the units)	1: Set Fan Speed Quiet	11	T

Register name	Possible values	Modbus address	R/W
Fan Speed Low (all the units)	1: Set Fan Speed Low	12	T
Fan Speed Med-Low (all the units)	1: Set Fan Speed Med-Low	13	T
Fan Speed Med-High (all the units)	1: Set Fan Speed Med-High	14	T
Fan Speed High (all the units)	1: Set Fan Speed High	15	T
Temperature Setpoint (all the units) (x10°C/°F)	Cool: 18..30°C / 64..86°F Heat: 16..30 °C / 61..86°	16	T

Table 3. Outdoor unit signals

Register name	Possible values	Modbus address formula	R/W
Capacity save	0: Not set 4: 70% 1: 100 % 5: 60% 2: 90 % 6: 50% 3: 80 % 7: 40%	(OU ID[0..11] + 1) × 25 + 10000 + 0	R
Forced Off	0: Not forced 1: Forced off	(OU ID[0..11] + 1) × 25 + 10000 + 1	R
Error	0: No error 1: Error	(OU ID[0..11] + 1) × 25 + 10000 + 2	R
Error code	0: No error X: Error	(OU ID[0..11] + 1) × 25 + 10000 + 3	R

Table 4. Individual unit signals

Register name	Possible values	Modbus address formula	R/W
On/Off	0: Off 1: On	(IU address[0..63] + 1) × 100 + 0	RW
Operation Mode	0: Auto 3: Fan 1: Heat 4: Cool 2: Dry	(IU address[0..63] + 1) × 100 + 1	RW
Fan Speed	0: Auto 3: Med 1: Quiet 4: High 2: Low	(IU address[0..63] + 1) × 100 + 2	RW
Fan Speed* *For models allowing med-low and med-high values	0: Auto 3: Med-Low 1: Quiet 4: Med-High 2: Low 5: High	(IU address[0..63] + 1) × 100 + 2	RW
Vane Position U-D	1: Pos1 4: Pos4 2: Pos2 10: Swing 3: Pos3	(IU address[0..63] + 1) × 100 + 3	RW
Vane Position L-R	1: Pos1 4: Pos4 2: Pos2 5: Pos5 3: Pos3 10: Swing	(IU address[0..63] + 1) × 100 + 4	RW
Temperature Setpoint (x10)	°C / °F	(IU address[0..63] + 1) × 100 + 5	RW
Ambient Temperature (x10)	Celsius: 0..63.5°C Fahrenheit: 32..147°F	(IU address[0..63] + 1) × 100 + 6	R
Temperature Limit Valid	0: Invalid 1: Valid	(IU address[0..63] + 1) × 100 + 7	RW

Register name	Possible values	Modbus address formula	R/W
Heat Setpoint Up Limit (x10)	Celsius: 10..30°C Fahrenheit: 50..86°F	(IU address[0..63] + 1) × 100 + 8	RW
Heat Setpoint Low Limit (x10)	Celsius: 10..30°C Fahrenheit: 50..86°F	(IU address[0..63] + 1) × 100 + 9	RW
Cool Setpoint Up Limit (x10)	Celsius: 10..30°C Fahrenheit: 50..86°F	(IU address[0..63] + 1) × 100 + 10	RW
Cool Setpoint Low Limit (x10)	Celsius: 10..30°C Fahrenheit: 50..86°F	(IU address[0..63] + 1) × 100 + 11	RW
Auto Setpoint Up Limit (x10)	Celsius: 10..30°C Fahrenheit: 50..86°F	(IU address[0..63] + 1) × 100 + 12	RW
Auto Setpoint Low Limit (x10)	Celsius: 10..30°C Fahrenheit: 50..86°F	(IU address[0..63] + 1) × 100 + 13	RW
Unit Error	0: No error 1: Error	(IU address[0..63] + 1) × 100 + 14	R
Unit Error code	0: No Error X: Error	(IU address[0..63] + 1) × 100 + 15	R
Filter Alarm	0: Normal 1: Alarm	(IU address[0..63] + 1) × 100 + 16	R
Filter Alarm Reset	1: Reset	(IU address[0..63] + 1) × 100 + 17	T
Communication Error IU	0: No error 1: Error	(IU address[0..63] + 1) × 100 + 18	R
Emergency	0: Off 1: On	(IU address[0..63] + 1) × 100 + 19	R
Allow full control from RC	0: Allow 1: Not allow	(IU address[0..63] + 1) × 100 + 20	RW
Allow On/Off from RC	0: Allow 1: Not allow	(IU address[0..63] + 1) × 100 + 21	RW
Allow Mode from RC	0: Allow 1: Not allow	(IU address[0..63] + 1) × 100 + 22	RW
Allow Setpoint from RC	0: Allow 1: Not allow	(IU address[0..63] + 1) × 100 + 23	RW
Thermo Off	0: Thermo Off 1: Thermo On	(IU address[0..63] + 1) × 100 + 24	RW
Consumption Yesterday	Wh/KWh	(IU address[0..63] + 1) × 100 + 25	RW
Consumption Today	Wh/KWh	(IU address[0..63] + 1) × 100 + 27	RW
Consumption Total	Wh/KWh	(IU address[0..63] + 1) × 100 + 29	RW
Consumption Yesterday Heat	Wh/KWh	(IU address[0..63] + 1) × 100 + 31	RW
Consumption Today Heat	Wh/KWh	(IU address[0..63] + 1) × 100 + 33	RW
Consumption Total Heat	Wh/KWh	(IU address[0..63] + 1) × 100 + 35	RW
Consumption Yesterday Cool	Wh/KWh	(IU address[0..63] + 1) × 100 + 37	RW
Consumption Today Cool	Wh/KWh	(IU address[0..63] + 1) × 100 + 39	RW
Consumption Total Cool	Wh/KWh	(IU address[0..63] + 1) × 100 + 41	RW

7.2. Integration into KNX Systems

7.2.1. KNX Signals

The following tables list all available KNX signals for this gateway.

NOTE
Physical Address: The gateway supports (P/S) and (P/I/S) format levels.

NOTICE
Communication object flags:

- **Ri (Read on initialization)**: The gateway requests this signal's updated data after an initialization instead of waiting for a change in the signal.
- **R**: The KNX system can read this signal.
- **W**: The KNX system can write this signal.
- **T**: The KNX system receives a telegram when this signal changes its value.
- **U**: This signal's data is updated after a reboot of either the gateway or the bus.

Table 5. Global signals

Object name	Possible values	DPT	Flags
Control_Gateway ES	0: Disable energy saving 1: Enable energy saving	1.003-DPT_Enable (1bit)	W
Status_Gateway ES	0: Disable energy saving 1: Enable energy saving	1.003-DPT_Enable (1bit)	T, R
Status_Gateway error	0: No error 1: Error	1.005-DPT_Alarm (1bit)	T, R
Status_Gateway error code	0: No error X: Error	8.x (2byte)	T, R
On/Off (all units)	0: Off 1: On	1.001-DPT_Switch (1bit)	W
Operating Mode (all units)	0: Auto 9: Fan 1: Heat 14: Dry 3: Cool	20.105-DPT_HVACContrMode (1byte)	W
Operating Mode (all units)	0: Auto 3: Fan 1: Heat 4: Cool 2: Dry	5.x (1byte)	W
Fan Speed (all units)	1: Quiet 4: Med-High 2: Low 5: High 3: Med-Low	5.x (1byte)	W
Fan Speed AUTO (all units)	1: Set auto fan 0: Stop auto fan	1.001-DPT_Switch (1bit)	W
Temperature Setpoint (all units)	Cool: 19..30°C / 66..86°F Heat: 17..30°C / 63..86°F	9.001-DPT_Value_Temp (2byte) / 9.027-DPT_Value_Temp_F	W
Remote control disablement	0: No disabled 1: Disabled	1.002-DPT_Boolean (1bit)	W

Table 6. Outdoor unit signals

Object name	Possible values	DPT	Flags
Control_Capacity save	0% 1..40% 41..50% 51..60% 61..70% 71..80% 81..90% 91..100%	5.001-DPT_Scaling (1byte)	W
Status_Capacity save	0% 1..40% 41..50% 51..60% 61..70% 71..80% 81..90% 91..100%	5.001-DPT_Scaling (1byte)	R, T
Control_Forced off	0: Not forced 1: Forced off	1.002-DPT_Boolean (1bit)	W
Status_Forced off	0: Not forced 1: Forced off	1.002-DPT_Boolean (1bit)	R, T
Status_Error	0: No error 1: Error	1.005-DPT_Alarm (1bit)	R, T
Status_Error code	0: No error X: Error	8.x (2byte)	R, T

Table 7. Indoor unit signals

Object name	Possible values	DPT	Flags
Status_Exists	0: Not exist 1: Exists	1.001-DPT_Switch (1bit)	R, T
Control_On/Off	0: Off 1: On	1.001-DPT_Switch (1bit)	W
Status_On/Off	0: Off 1: On	1.001-DPT_Switch (1bit)	R, T
Control_Operation mode	0: Auto 1: Heat 3: Cool 9: Fan 14: Dry	20.105-DPT_HVACContrMode (1byte)	W
Status_Operation mode	0: Auto 1: Heat 3: Cool 9: Fan 14: Dry	20.105-DPT_HVACContrMode (1byte)	R, T
Control_Operation mode	0: Auto 1: Heat 2: Dry 3: Fan 4: Cool	5.x (1byte)	W
Status_Operation mode	0: Auto 1: Heat 2: Dry 3: Fan 4: Cool	5.x (1byte)	R, T
Control_Mode Cool/Heat	0: Cool 1: Heat	1.100-DPT_Heat/Cool (1bit)	W
Status_Mode Cool/Heat	0: Cool 1: Heat	1.100-DPT_Heat/Cool (1bit)	R, T
Control_Heat mode&ON	0%: Off 1..100%: On+Heat	5.001-DPT_Scaling (1byte)	W
Control_Cool mode&ON	0%: Off 1..00%: On+Cool	5.001-DPT_Scaling (1byte)	W

Object name	Possible values	DPT	Flags
Control_Auto mode	1: Set auto mode	1.001-DPT_Switch (1bit)	W
Status_Auto mode	1: Auto mode active 0: Auto mode not active	1.001-DPT_Switch (1bit)	R, T
Control_Heat mode	1: Set heat mode	1.001-DPT_Switch (1bit)	W
Status_Heat mode	1: Heat mode active 0: Heat mode not active	1.001-DPT_Switch (1bit)	R, T
Control_Cool mode	1: Set cool mode	1.001-DPT_Switch (1bit)	W
Status_Cool mode	1: Cool mode active 0: Cool mode not active	1.001-DPT_Switch (1bit)	R, T
Control_Fan mode	1: Set fan mode	1.001-DPT_Switch (1bit)	W
Status_Fan mode	1: Fan mode active 0: Fan mode not active	1.001-DPT_Switch (1bit)	R, T
Control_Dry mode	1: Set dry mode	1.001-DPT_Switch (1bit)	W
Status_Dry mode	1: Dry mode active 0: Dry mode not active	1.001-DPT_Switch (1bit)	R, T
Control_Fan speed enumerated	1: Quiet 3: Med 2: Low 4: High	5.010 (DPT_Value_1_Ucount)	W
Status_Fan speed enumerated	1: Quiet 3: Med 2: Low 4: High	5.010 (DPT_Value_1_Ucount)	R, T
Control_Fan speed scaling	Thresholds: 0..37% 63..87% 38..62% 88..100%	5.001-DPT_Scaling (1byte)	W
Status_Fan speed scaling	Thresholds: 25% 75% 50% 100%	5.001-DPT_Scaling (1byte)	R, T
Control_Fan speed enumerated	1: Quiet 4: Med-High 2: Low 5: High 3: Med-Low	5.010 (DPT_Value_1_Ucount)	W
Status_Fan speed enumerated	Thresholds: 25% 75% 50% 100%	5.010 (DPT_Value_1_Ucount)	R, T
Control_Fan speed scaling	Thresholds: 0..29% 70..89% 30..49% 90..100% 50..69%	5.001-DPT_Scaling (1byte)	W
Status_Fan speed scaling	Thresholds: 20% 80% 40% 100% 60%	5.001-DPT_Scaling (1byte)	R, T
Control_Fan speed low	1: Set fan speed low	1.001-DPT_Switch (1bit)	W
Status_Fan speed low	1: Speed low active 0: Speed low not active	1.001-DPT_Switch (1bit)	R, T
Control_Fan speed med-low	1: Set fan speed med-low	1.001-DPT_Switch (1bit)	W
Status_Fan speed med-low	1: Speed med-low active 0: Speed med-low not active	1.001-DPT_Switch (1bit)	R, T

Object name	Possible values	DPT	Flags
Control_Fan speed med	1: Set fan speed med	1.001-DPT_Switch (1bit)	W
Status_Fan speed med	1: Speed med active 0: Speed med not active	1.001-DPT_Switch (1bit)	R, T
Control_Fan speed med-high	1: Set fan speed med-high	1.001-DPT_Switch (1bit)	W
Status_Fan speed med-high	1: Speed med-high active 0: Speed med-high not active	1.001-DPT_Switch (1bit)	R, T
Control_Fan speed high	1: Set fan speed high	1.001-DPT_Switch (1bit)	W
Status_Fan speed high	1: Speed high active 0: Speed high not active	1.001-DPT_Switch (1bit)	R, T
Control_Fan speed quiet	1: Set fan speed quiet	1.001-DPT_Switch (1bit)	W
Status_Fan speed quiet	1: Speed quiet active 0: Speed quiet not active	1.001-DPT_Switch (1bit)	R, T
Control_Fan speed Man/Auto	0: Manual 1: Auto	1.001-DPT_Switch (1bit)	W
Status_Fan speed Man/Auto	0: Manual 1: Auto	1.001-DPT_Switch (1bit)	R, T
Control_Vanes U-D enumerated	1..4: Position 1..Position 4	5.010 (DPT_Value_1_Ucount)	W
Status_Vanes U-D enumerated	1..4: Position 1..Position 4	5.010 (DPT_Value_1_Ucount)	R, T
Control_Vanes U-D scaling	Thresholds: 0..37% 63..87% 38..62% 88..100%	5.001-DPT_Scaling (1byte)	W
Status_Vanes U-D scaling	Thresholds: 25% 75% 50% 100%	5.001-DPT_Scaling (1byte)	R, T
Control_Vanes U-D pos-1	1: Set pos-1 vanes U-D	1.001-DPT_Switch (1bit)	W
Status_Vanes U-D pos-1	1: Vanes U-D pos-1 active 0: Vanes U-D pos-1 not active	1.001-DPT_Switch (1bit)	R, T
Control_Vanes U-D pos-2	1: Set pos-2 vanes U-D	1.001-DPT_Switch (1bit)	W
Status_Vanes U-D pos-2	1: Vanes U-D pos-2 active 0: Vanes U-D pos-2 not active	1.001-DPT_Switch (1bit)	R, T
Control_Vanes U-D pos-3	1: Set pos-3 vanes U-D	1.001-DPT_Switch (1bit)	W
Status_Vanes U-D pos-3	1: Vanes U-D pos-3 active 0: Vanes U-D pos-3 not active	1.001-DPT_Switch (1bit)	R, T
Control_Vanes U-D pos-4	1: Set pos-4 vanes U-D	1.001-DPT_Switch (1bit)	W
Status_Vanes U-D pos-4	1: Vanes U-D pos-4 active 0: Vanes U-D pos-4 not active	1.001-DPT_Switch (1bit)	R, T
Control_Vanes U-D swing	0: Swing off 1: Swing on	1.001-DPT_Switch (1bit)	W
Status_Vanes U-D swing	0: Swing off 1: Swing on	1.001-DPT_Switch (1bit)	R, T
Control_Vanes L-R enumerated	1..5: Position 1..Position 5	5.010 (DPT_Value_1_Ucount)	W
Status_Vanes L-R enumerated	1..5: Position 1..Position 5	5.010 (DPT_Value_1_Ucount)	R, T
Control_Vanes L-R scaling	Thresholds: 0..29% 70..89% 30..49% 90..100% 50..69%	5.001-DPT_Scaling (1byte)	W

Object name	Possible values	DPT	Flags
Status_Vanes L-R scaling	Thresholds: 20% 80% 40% 100% 60%	5.001-DPT_Scaling (1byte)	R, T
Control_Vanes L-R pos-1	1: Set pos-1 vanes L-R	1.001-DPT_Switch (1bit)	W
Status_Vanes L-R pos-1	1: Vanes L-R pos-1 active 0: Vanes L-R pos-1 not active	1.001-DPT_Switch (1bit)	R, T
Control_Vanes L-R pos-2	1: Set pos-2 vanes L-R	1.001-DPT_Switch (1bit)	W
Status_Vanes L-R pos-2	1: Vanes L-R pos-2 active 0: Vanes L-R pos-2 not active	1.001-DPT_Switch (1bit)	R, T
Control_Vanes L-R pos-3	1: Set pos-3 vanes L-R	1.001-DPT_Switch (1bit)	W
Status_Vanes L-R pos-3	1: Vanes L-R pos-3 active 0: Vanes L-R pos-3 not active	1.001-DPT_Switch (1bit)	R, T
Control_Vanes L-R pos-4	1: Set pos-4 vanes L-R	1.001-DPT_Switch (1bit)	W
Status_Vanes L-R pos-4	1: Vanes L-R pos-4 active 0: Vanes L-R pos-4 not active	1.001-DPT_Switch (1bit)	R, T
Control_Vanes L-R pos-5	1: Set pos-5 vanes L-R	1.001-DPT_Switch (1bit)	W
Status_Vanes L-R pos-5	1: Vanes L-R pos-5 active 0: Vanes L-R pos-5 not active	1.001-DPT_Switch (1bit)	R, T
Control_Vanes L-R swing	0: Swing off 1: Swing on	1.001-DPT_Switch (1bit)	W
Status_Vanes L-R swing	0: Swing off 1: Swing on	1.001-DPT_Switch (1bit)	R, T
Control_Temperature setpoint	Celsius: 0..63.5°C Fahrenheit: 32..146°F	9.001-DPT_Value_Temp (2byte) / 9.027-DPT_Value_Temp_F	W
Status_Temperature setpoint	Celsius: 0..63.5°C Fahrenheit: 32..146°F	9.001-DPT_Value_Temp (2byte) / 9.027-DPT_Value_Temp_F	R, T
Status_AC Ambient temperature	Celsius: 0..63.5°C Fahrenheit: 32..146°F	9.001-DPT_Value_Temp (2byte) / 9.027-DPT_Value_Temp_F	R, T
Control_KNX ambient temperature	°C / °F	9.001-DPT_Value_Temp (2byte) / 9.027-DPT_Value_Temp_F	W
Status_Unit error	0: No error 1: Error	1.005-DPT_Alarm (1bit)	R, T
Status_Unit error code	0: No Error X: Error	8.x (2 byte)	R, T
Status_Emergency	0: Off 1: On	1.001-DPT_Switch (1bit)	R, T
Status_FilterSign	0: Normal 1: Alarm	1.005-DPT_Alarm (1bit)	R, T
Control_FilterReset	0: No reset 1: Reset	1.015-DPT_Reset (1bit)	W
Control_Remote control disablement (all)	0: No disabled 1: Disabled	1.002 DPT_Bool (1bit)	W
Status_Remote control disablement (all)	0: No disabled 1: Disabled	1.002 DPT_Bool (1bit)	R, T
Control_On/Off Remote control disablement	0: No disabled 1: Disabled	1.002 DPT_Bool (1bit)	W

Object name	Possible values	DPT	Flags
Status_On/Off Remote control disablement	0: No disabled 1: Disabled	1.002 DPT_Bool (1bit)	R, T
Control_Mode Remote control disablement	0: No disabled 1: Disabled	1.002 DPT_Bool (1bit)	W
Status_Mode Remote control disablement	0: No disabled 1: Disabled	1.002 DPT_Bool (1bit)	R, T
Control_Setpoint Remote control disablement	0: No disabled, 1: Disabled	1.002 DPT_Bool (1bit)	W
Status_Setpoint Remote control disablement	0: No disabled 1: Disabled	1.002 DPT_Bool (1bit)	R, T
Control_Thermostat off	0: Thermostat on 1: Thermostat off	1.001-DPT_Switch (1bit)	W
Status_Thermostat off	0: Thermostat on 1: Thermostat off	1.001-DPT_Switch (1bit)	R, T
Status_Consumption Yesterday	Wh/KWh	13.010-DPT_ActiveEnergy (Wh) (4byte)	R, T
Status_Consumption Today	Wh/KWh	13.010-DPT_ActiveEnergy (Wh) (4byte)	R, T
Status_Consumption Total	Wh/KWh	13.010-DPT_ActiveEnergy (Wh) (4byte)	R, T
Status_Consumption Yesterday_Heat	Wh/KWh	13.010-DPT_ActiveEnergy (Wh) (4byte)	R, T
Status_Consumption Today_Heat	Wh/KWh	13.010-DPT_ActiveEnergy (Wh) (4byte)	R, T
Status_Consumption Total_Heat	Wh/KWh	13.010-DPT_ActiveEnergy (Wh) (4byte)	R, T
Status_Consumption Yesterday_Cool	Wh/KWh	13.010-DPT_ActiveEnergy (Wh) (4byte)	R, T
Status_Consumption Today_Cool	Wh/KWh	13.010-DPT_ActiveEnergy (Wh) (4byte)	R, T
Status_Consumption Total_Cool	Wh/KWh	13.010-DPT_ActiveEnergy (Wh) (4byte)	R, T

NOTE
The default unit for the consumption signals is Wh, but you can set it in KWh instead. If so, the DPT ID changes from 13.010 to 13.013.

7.3. Integration into BACnet Systems

NOTICE
You can consult the Protocol Implementation Conformance Statement (PICS) document here.

7.3.1. BACnet Objects

NOTICE
This part is common for BACnet MS/TP and BACnet/IP.

Table 8. Available object types

Input object types	Output object types
Analog input	Analog output
Binary input	Binary output
Multistate input	Multistate output

The following tables list all available BACnet objects for this gateway.

Table 9. Global signals

Object name	Possible values	Object type	Object instance
Gateway_ES_C	0: Not used 1: Energy saving	4-Binary Output	0
Gateway_ES_S	0: Not used 1: Energy saving	3-Binary Input	0
Gateway_Error_S	0: Normal 1: Abnormal	3-Binary Input	1
Gateway_ErrorCode_S	1: No error 2: Hardware Comm. Error 3: No Config Error	13-Multistate Input	0
Batch_Operation_C	0: Off 1: On	4-Binary Output	1
Batch_OperationMode_C	1: Cool 4: Dry 2: Heat 5: Auto 3: Fan	14-Multistate Output	0
Batch_Fanspeed_C	1: Low 5: Quiet 2: High 6: Med_Low 3: Med 7. Med_High 4: Auto	14-Multistate Output	1
Batch_SetTemp_C	°C / °F	1-Analog Input	0
Batch_RC_Prohibition_C	1: No disabled 0: Disabled	14-Multistate Output	2

Table 10. Outdoor unit signals

Object name	Possible values	Object type	Object instance
OUXX_CapacitySave_C	1: Not set 2: 100% 3: 90% 4: 80% 5: 70% 6: 60% 7: 50% 8: 40%	14-Multistate Output	(OU[0..11] × 25) + 10000 + 0
OUXX_CapacitySave_S	1: Not set 2: 100% 3: 90% 4: 80% 5: 70% 6: 60% 7: 50% 8: 40%	13-Multistate Input	(OU[0..11] × 25) + 10000 + 0
OUXX_ForcedOff_C	0: Reset 1: Set	4-Binary Output	(OU[0..11] × 25) + 10000 + 0
OUXX_ForcedOff_S	0: Reset 1: Set	3-Binary Input	(OU[0..11] × 25) + 10000 + 0
OUXX_LowNoiseOp_C	1: Stop 2: Lev1_Quiet 3: Lev1_Ability 4: Lev2_Quiet 5: Lev2_Ability 6: Lev3_Quiet 7: Lev3_Ability	14-Multistate Output	(OU[0..11] × 25) + 10000 + 1
OUXX_LowNoiseOp_S	1 .. 16 (Consult the AC user manual)	13-Multistate Input	(OU[0..11] × 25) + 10000 + 1
OUXX_Error_S	0: Normal 1: Fault	3-Binary Input	(OU[0..11] × 25) + 10000 + 1
OUXX_ErrorCode_S	1: No error X: Error	13-Multistate Input	(OU[0..11] × 25) + 10000 + 2

Table 11. Indoor unit signals

Object name	Possible values	Object type	Object instance
IUXX_Exists_S	0: Not Exist 1: Exist	3-Binary Input	(U[1..64] × 100) + 0
IUXX_Operation_C	0: Off 1: On	4-Binary Output	(U[1..64] × 100) + 0
IUXX_Operation_S	0: Off 1: On	3-Binary Input	(U[1..64] × 100) + 1
IUXX_OperationMode_C	1: Cool 2: Heat 3: Fan 4: Dry 5: Auto	14-Multistate Output	(U[1..64] × 100) + 0
IUXX_OperationMode_S	1: Cool 2: Heat 3: Fan 4: Dry 5: Auto	13-Multistate Input	(U[1..64] × 100) + 0
IUXX_FanSpeed_C	1: Low 2: High 3: Med 4: Auto 5: Quiet 6: Med_Low 7. Med_High	14-Multistate Output	(U[1..64] × 100) + 1
IUXX_FanSpeed_S	1: Low 2: High 3: Med 4: Auto 5: Quiet 6: Med_Low 7. Med_High	13-Multistate Input	(U[1..64] × 100) + 1

Object name	Possible values	Object type	Object instance
IUXX_FanSpeed_C	1: Low 4: Auto 2: High 5: Quiet 3: Med	14-Multistate Output	(U[1..64] × 100) + 1
IUXX_FanSpeed_S	1: Low 4: Auto 2: High 5: Quiet 3: Med	13-Multistate Input	(U[1..64] × 100) + 1
IUXX_AirFlowDirVT_C	1: Pos1 4: Pos4 2: Pos2 5: Swing 3: Pos3	14-Multistate Output	(U[1..64] × 100) + 2
IUXX_AirFlowDirVT_S	1: Pos1 4: Pos4 2: Pos2 5: Swing 3: Pos3	13-Multistate Input	(U[1..64] × 100) + 2
IUXX_AirFlowDirHZ_C	1: Pos1 4: Pos4 2: Pos2 5: Pos5 3: Pos3 6: Swing	14-Multistate Output	(U[1..64] × 100) + 3
IUXX_AirFlowDirHZ_S	1: Pos1 4: Pos4 2: Pos2 5: Pos5 3: Pos3 6: Swing	13-Multistate Input	(U[1..64] × 100) + 3
IUXX_SetTemp_C	°C / °F	1-Analog Output	(U[1..64] × 100) + 0
IUXX_SetTemp_S	°C / °F	0-Analog Input	(U[1..64] × 100) + 0
IUXX_SpaceTemp_S	°C / °F	0-Analog Input	(U[1..64] × 100) + 1
IUXX_RC_Prohibit_C	1 .. 65 (Consult the AC user manual)	14-Multistate Output	(U[1..64] × 100) + 4
IUXX_RC_Prohibit_S	1 .. 65 (Consult the AC user manual)	13-Multistate Input	(U[1..64] × 100) + 4
IUXX_ThermostatOFF_C	0: Reset 1: Set	4-Binary Output	(U[1..64] × 100) + 1
IUXX_ThermostatOFF_S	0: Reset 1: Set	3-Binary Input	(U[1..64] × 100) + 2
IUXX_Reset_Filter_C	0: No Reset 1: Reset	4-Binary Output	(U[1..64] × 100) + 2
IUXX_FilterSign_S	0: No Sign 1: Sign	3-Binary Input	(U[1..64] × 100) + 3
IUXX_Emergency_S	0: Normal 1: Stop	3-Binary Input	(U[1..64] × 100) + 4
IUXX_Error_S	0: Normal 1: Fault	3-Binary Input	(U[1..64] × 100) + 5
IUXX_ErrorCode_S	1: No Error X: Error	13-Multistate Input	(U[1..64] × 100) + 5
IUXX_TempLimValid_C	0: Invalid 1: Valid	4-Binary Output	(U[1..64] × 100) + 3
IUXX_TempLimValid_S	0: Invalid 1: Valid	3-Binary Input	(U[1..64] × 100) + 6
IUXX_AutoTempLoLim_C	°C / °F	1-Analog Output	(U[1..64] × 100) + 1
IUXX_AutoTempLoLim_S	°C / °F	0-Analog Input	(U[1..64] × 100) + 2
IUXX_AutoTempHiLim_C	°C / °F	1-Analog Output	(U[1..64] × 100) + 2
IUXX_AutoTempHiLim_S	°C / °F	0-Analog Input	(U[1..64] × 100) + 3
IUXX_CoolTempLoLim_C	°C / °F	1-Analog Output	(U[1..64] × 100) + 3

Object name	Possible values	Object type	Object instance
IUXX_CoolTempLoLim_S	°C / °F	0-Analog Input	(U[1..64] × 100) + 4
IUXX_CoolTempHiLim_C	°C / °F	1-Analog Output	(U[1..64] × 100) + 4
IUXX_CoolTempHiLim_S	°C / °F	0-Analog Input	(U[1..64] × 100) + 5
IUXX_HeatTempLoLim_C	°C / °F	1-Analog Output	(U[1..64] × 100) + 5
IUXX_HeatTempLoLim_S	°C / °F	0-Analog Input	(U[1..64] × 100) + 6
IUXX_HeatTempHiLim_C	°C / °F	1-Analog Output	(U[1..64] × 100) + 6
IUXX_HeatTempHiLim_S	°C / °F	0-Analog Input	(U[1..64] × 100) + 7
IUXX_Managed_Mode_S	1: None 3: Slave 2: Master 4: External	13-Multistate Input	(U[1..64] × 100) + 6
IUXX_Consumption Yesterday	Wh/KWh	0-Analog Input	(U[1..64] × 100) + 8
IUXX_Consumption Today	Wh/KWh	0-Analog Input	(U[1..64] × 100) + 9
IUXX_Consumption Total	Wh/KWh	0-Analog Input	(U[1..64] × 100) + 10
IUXX_Consumption Yesterday Heat	Wh/KWh	0-Analog Input	(U[1..64] × 100) + 11
IUXX_Consumption Today Heat	Wh/KWh	0-Analog Input	(U[1..64] × 100) + 12
IUXX_Consumption Total Heat	Wh/KWh	0-Analog Input	(U[1..64] × 100) + 13
IUXX_Consumption Yesterday Cool	Wh/KWh	0-Analog Input	(U[1..64] × 100) + 14
IUXX_Consumption Today Cool	Wh/KWh	0-Analog Input	(U[1..64] × 100) + 15
IUXX_Consumption Total Cool	Wh/KWh	0-Analog Input	(U[1..64] × 100) + 16

7.4. Integration into MQTT Systems

7.4.1. MQTT Topics

When using the MQTT protocol, the gateway publishes topics to share its status information and subscribes to topics to receive commands. Both actions are performed through an external MQTT broker, which manages communication between the gateway and other MQTT clients, such as the BMS.

In MQTT, a topic is a string identifier used to route messages between clients via the broker. A topic follows a hierarchical structure with different levels, which vary depending on the MQTT broker:

- **AWS IoT Core / Generic**:
  - **For Publishing**: <macGW>/<IUxx>/status/<metricName>
  - **For Subscribing**: <macGW>/<IUxx>/cmd/<metricName>
- **Azure IoT Hub**:
  - **For Publishing**: devices/<macGW>/messages/events/&IU=<IUxx>&metricName=<metricName>
  - **For Subscribing**: devices/<macGW>/messages/devicebound/&IU=<IUxx>&metricName=<metricName>

The following tables list all available topics.

Table 12. Publishing topics

MQTT topics	Description	Possible values
AWS IoT Core / Generic: <macGW>/<IUxx>/status/onOffSts **Azure IoT Hub**: devices/<macGW>/messages/events/&IU=<IUxx>&metricName=onOffSts	On/Off Status	0: Off 1: On
AWS IoT Core / Generic: <macGW>/<IUxx>/status/modeSts **Azure IoT Hub**: devices/<macGW>/messages/events/&IU=<IUxx>&metricName=modeSts	Operation Mode Status	0: Auto 1: Heat 2: Dry 3: Fan 4: Cool
AWS IoT Core / Generic: <macGW>/<IUxx>/status/fanSpeedSts **Azure IoT Hub**: devices/<macGW>/messages/events/&IU=<IUxx>&metricName=fanSpeedSts	Fan Speed Status	0: Auto 1: Quiet 2: Low 3: Med 4: High
AWS IoT Core / Generic: <macGW>/<IUxx>/status/VanesUDSts **Azure IoT Hub**: devices/<macGW>/messages/events/&IU=<IUxx>&metricName=VanesUDSts	Vane Position (Up-Down) Status	1: Pos. 1 2: Pos. 2 3: Pos. 3 4: Pos. 4 10: Swing
AWS IoT Core / Generic: <macGW>/<IUxx>/status/VanesLRSts **Azure IoT Hub**: devices/<macGW>/messages/events/&IU=<IUxx>&metricName=VanesLRSts	Vane Position (Left-Right) Status	1: Pos. 1 2: Pos. 2 3: Pos. 3 4: Pos. 4 5: Pos. 5 10: Swing

MQTT topics	Description	Possible values
AWS IoT Core / Generic: <macGW>/<IUxx>/status/setTempSts **Azure IoT Hub**: devices/<macGW>/messages/events/&IU=<IUxx>&metricName=setTempSts	Temperature Setpoint Status	°C/°F
AWS IoT Core / Generic: <macGW>/<IUxx>/status/tempAmbientSts **Azure IoT Hub**: devices/<macGW>/messages/events/&IU=<IUxx>&metricName=tempAmbientSts	Ambient Temperature Status	0..63.5°C/32..147°F
AWS IoT Core / Generic: <macGW>/<IUxx>/status/errorSts **Azure IoT Hub**: devices/<macGW>/messages/events/&IU=<IUxx>&metricName=errorSts	Unit Error Status	0: No error 1: Error
AWS IoT Core / Generic: <macGW>/<IUxx>/status/errorCodeSts **Azure IoT Hub**: devices/<macGW>/messages/events/&IU=<IUxx>&metricName=errorCodeSts	Unit Error Code Status	0: No error X: Error

Table 13. Subscribing topics

MQTT topics	Description	Possible values
AWS IoT Core / Generic: <macGW>/<IUxx>/cmd/onOffCmd **Azure IoT Hub**: devices/<macGW>/messages/devicebound/&IU=<IUxx>&metricName=onOffCmd	On/Off Control	0: Off 1: On
AWS IoT Core / Generic: <macGW>/<IUxx>/cmd/modeCmd **Azure IoT Hub**: devices/<macGW>/messages/devicebound/&IU=<IUxx>&metricName=modeCmd	Operation Mode Control	0: Auto 1: Heat 2: Dry 3: Fan 4: Cool
AWS IoT Core / Generic: <macGW>/<IUxx>/cmd/fanSpeedCmd **Azure IoT Hub**: devices/<macGW>/messages/devicebound/&IU=<IUxx>&metricName=fanSpeedCmd	Fan Speed Control	0: Auto 1: Quiet 2: Low 3: Med 4: High
AWS IoT Core / Generic: <macGW>/<IUxx>/cmd/vanesUDCmd **Azure IoT Hub**: devices/<macGW>/messages/devicebound/&IU=<IUxx>&metricName=vanesUDCmd	Vane Position (Up-Down) Control	1: Pos. 1 2: Pos. 2 3: Pos. 3 4: Pos. 4 10: Swing
AWS IoT Core / Generic: <macGW>/<IUxx>/cmd/vanesLRCmd **Azure IoT Hub**: devices/<macGW>/messages/devicebound/&IU=<IUxx>&metricName=vanesLRCmd	Vane Position (Left-Right) Control	1: Pos. 1 2: Pos. 2 3: Pos. 3 4: Pos. 4 5: Pos. 5 10: Swing
AWS IoT Core / Generic: <macGW>/<IUxx>/cmd/setTempCmd **Azure IoT Hub**: devices/<macGW>/messages/devicebound/&IU=<IUxx>&metricName=setTempCmd	Temperature Setpoint Control	°C/°F

The content of the transmitted topics is handled in a JSON format.

Example 1. Payload example:

```
Topic:
<macGW>/<IUxx>/cmd/setTempCmd

Payload:
{
"name": "setTempCmd",
"timestamp": "<timestamp>",
"dataType": "float",
"isValid": "true",
"value": "0.0,"
"unit": "ºC"
}
```

NOTICE
To know more about the gateway configuration, consult the Intesis MAPS guide for Fujitsu.

7.5. Integration into Home Automation Systems

7.5.1. Home Automation Signals

The following tables list all available Home Automation signals for this gateway.

NOTE

- **SET**: Command used to control the indoor unit. It is sent by the client.
- **CHN**: Command used to get notifications of changes in the status of a specific function of the gateway. It is sent spontaneously by the gateway itself.
- **GET**: Command used to get the status of a specific function. It is sent by the client.

To know more about the Home Automation protocol, see the WMP protocol specifications manual.

Table 14. Indoor/outdoor unit signals

Name	Possible values	acNum[1]	Commands supported
On/Off	ON OFF	See the note below	SET/CHN/GET
Operation Mode	HEAT DRY COOL AUTO FAN		SET/CHN/GET
Fan Speed	1 4 2 5 3 AUTO		SET/CHN/GET
Vane Position UD	1 4 2 SWING 3		SET/CHN/GET
Vane Position LR	1 4 2 5 3 SWING		SET/CHN/GET
Temperature Setpoint (x10)	°C / °F		SET/CHN/GET
AC Ambient Temperature (x10)	°C / °F		CHN/GET
Unit Error code	0: No Error X: Error		CHN/GET
Error IU	OK ERR		CHN/GET
Outdoor unit error code	0-No Error X-Error		CHN/GET
Error OU	OK ERR		CHN/GET

NOTE

[1] This index must be set according to the Unit ID Index.

For outdoor units, the acNum value must be the same as the minimum indoor unit associated in the CONFIGURATION section.

8. Late Configuration: Change the Gateway's Protocol

Reconfiguring the gateway with a different protocol is very easy:

1. Connect the gateway to the computer and open the configuration tool Intesis MAPS.
2. Select the new template you need.
3. Click **Next** or double-click the template in the list.
4. A message will pop up, asking if you want to save the project currently loaded in the gateway.
5. Click **Yes** or **No**, depending on your needs.
6. Configure the needed parameters and signals for your new project.
7. Send the configuration to the gateway.

NOTE
To know more about the gateway configuration, consult the Intesis MAPS Guide for Fujitsu.

9. Error Codes

NOTE
These error codes are the same for all applications.

BACnet value	Modbus/KNX/ MQTT/Home automation value	Error code	Description
18	17	12	Remote controller communication error
19	18	13	Communication error between Outdoor unit
20	19	14	Network communication error
21	20	15	Scan error
22	21	16	Peripheral device communication error
23	22	17	Electricity charge apportionment error
33	32	21	Initial setting error
38	37	26	Address setting error
39	38	27	Master unit, slave unit set-up error
40	39	28	Other setting error
41	40	29	Connection unit number error in wired remote controller system
49	48	31	Indoor unit power supply abnormal
50	49	32	Indoor unit main PCB error
53	52	35	Manual auto switch error
55	54	37	Indoor unit transmission PCB error
56	55	38	Network convertor PCB error
58	57	3A	Indoor unit communication circuit (wired remote controller) error
65	64	41	Room temp. sensor error
66	65	42	Indoor unit Heat Ex. sensor error
81	80	51	Indoor unit fan motor1 error
82	81	52	Indoor unit coil (Expansion Valve) error
83	82	53	Water Drain Abnormal
95	94	5U	Indoor unit error
97	96	61	Outdoor unit power supply abnormal
98	97	62	Outdoor unit main PCB error
99	98	63	Inverter PCB error
103	102	67	Short interruption detection protected operation
104	103	68	Magnetic relay error
105	104	69	Outdoor unit transmission PCB error
113	112	71	Discharge Temp Sensor Error
114	113	72	Compressor Temp Sensor Error
115	114	73	Outdoor unit Heat Ex. sensor error
116	115	74	Outdoor Temp Sensor Error
117	116	75	Suction Gas Temp Sensor Error

BACnet value	Modbus/KNX/ MQTT/Home automation value	Error code	Description
119	118	77	Heat sink temp. sensor error
130	129	82	Sub-cool Heat Ex. gas temp. sensor error
131	130	83	Liquid pipe temp. sensor error
132	131	84	Current sensor error
134	133	86	Pressure sensor error
146	145	92	Compressor 2 error
147	146	93	Compressor start up error
148	147	94	Trip detection
149	148	95	Compressor motor control error
151	150	97	Outdoor unit fan motor 1 error
152	151	98	Outdoor unit fan motor 2 error
153	152	99	4-way valve error
154	153	9A	Outdoor unit coil (Expansion Valve) error
159	158	9U	Outdoor unit error
161	160	A1	Discharge temperature 1 abnormal
162	161	A2	Discharge temperature 2 abnormal
163	162	A3	Compressor temperature abnormal
164	163	A4	Pressure abnormal 1
165	164	A5	Pressure abnormal 2
166	165	A6	Outdoor heat exchanger temperature abnormal
170	169	AA	Special operation error
171	170	AC	Ambient temperature abnormal
177	176	C1	Main PCB error
178	177	C2	Transmission PCB error
179	178	C3	PCB 1 error
180	179	C4	PCB 2 error
181	180	C5	PCB 3 error
182	181	C6	PCB 4 error
183	182	C7	PCB 5 error
184	183	C8	Input device error
185	184	C9	Display device error
186	185	CA	EEPROM error
187	186	CC	Sensor error
188	187	CF	External connector error (USB memory)
189	188	CJ	Other parts error
209	208	J1	RB unit error

IMPORTANT
These error codes may differ depending on the specific AC unit model.

NOTE
If you detect a non-listed error code, please contact Fujitsu technical support.