BACnet MS/TP Server & BACnet IP Server

Hitachi Air Conditioning

Compatible with Hitachi Commercial and VRF air conditioners

USER MANUAL

Issue date: 09/2024 v1.4 ENGLISH

14 rue Edouard Petit
42000 St-Etienne

Tel : +33 477 92 03 56
Email : contact@rg2i.com
www.rg2i.com

Important User Information

Disclaimer

The information in this document is for informational purposes only. Please inform HMS Industrial Networks of any inaccuracies or omissions found in this document. HMS Industrial Networks disclaims any responsibility or liability for any errors that may appear in this document.

HMS Industrial Networks reserves the right to modify its products in line with its policy of continuous product development. The information in this document shall therefore not be construed as a commitment on the part of HMS Industrial Networks and is subject to change without notice. HMS Industrial Networks makes no commitment to update or keep current the information in this document.

The data, examples and illustrations found in this document are included for illustrative purposes and are only intended to help improve understanding of the functionality and handling of the product. In view of the wide range of possible applications of the product, and because of the many variables and requirements associated with any particular implementation, HMS Industrial Networks cannot assume responsibility or liability for actual use based on the data, examples or illustrations included in this document nor for any damages incurred during installation of the product. Those responsible for the use of the product must acquire sufficient knowledge in order to ensure that the product is used correctly in their specific application and that the application meets all performance and safety requirements including any applicable laws, regulations, codes and standards. Further, HMS Industrial Networks will under no circumstances assume liability or responsibility for any problems that may arise as a result from the use of undocumented features or functional side effects found outside the documented scope of the product. The effects caused by any direct or indirect use of such aspects of the product are undefined and may include e.g. compatibility issues and stability issues.

© HMS Industrial Networks S.L.U - All rights reserved
This information is subject to change without notice

Gateway for the integration of Hitachi air conditioning units in BACnet enabled monitoring and control systems.

Compatible with Hitachi Commercial and VRF air conditioners

ORDER CODE	LEGACY ORDER CODE
INBACHIT001R000	-

© HMS Industrial Networks S.L.U - All rights reserved
This information is subject to change without notice

INDEX

1 Description 6
1.1 Introduction 6
1.2 Functionality 7
1.3 Capacity of Intesis 7
1.4 Quick Setup 7
2 Protocol Implementation Conformance Statement 8
2.1 BACnet Standardized Device Profile (Annex L): 8
2.2 Segmentation Capability: 8
2.3 Data Link Layer Options: 8
2.4 Device Address Binding: 8
2.5 Networking Options: 9
2.6 Character Sets Supported 9
2.7 Gateway 9
3 BACnet Interoperability Building Blocks Supported (BIBBs) 10
3.1 Data Sharing BIBBs 10
3.2 Alarm and Event Management BIBBs 10
3.3 Scheduling BIBBs 11
3.4 Trending BIBBs 11
3.5 Network Management BIBBs 11
3.6 Device Management BIBBs 12
4 Service Types 13
5 Objects 14
5.1 Supported Object Types 14
5.2 Member objects 15
5.2.1 Type: Gateway 15
5.2.2 Type: Indoor Unit 15
5.3 Objects and properties 16
5.3.1 Hitachi AC Gateway (Device Object Type) 16
5.3.2 OnOff_status (Binary Input Object Type) 18
5.3.3 OnOff_command (Binary Output Object Type) 19
5.3.4 Mode_status (Multistate Input Object Type) 20
5.3.5 Mode_command (Multistate Output Object Type) 21
5.3.6 Setpoint_status (Analog Input Object Type) 22
5.3.7 Setpoint_command (Analog Output Object Type) 23
5.3.8 FanSpeed_status (Multistate Input Object Type) 24
5.3.9 FanSpeed_command (Multistate Output Object Type) 25
5.3.10 AirDirectionUD_status (Multistate Input Object Type) 26
5.3.11 AirDirectionUD_command (Multistate Output Object Type) 27
5.3.12 RoomTemperature_status (Analog Input Object Type) 28

© HMS Industrial Networks S.L.U - All rights reserved
This information is subject to change without notice

5.3.13 RoomTemperature_command (Analog Output Object Type) 29
5.3.14 ErrorCode (Analog Input Object Type) 30
5.3.15 ErrorCodeM (Multistate Input Object Type) 31
5.3.16 ErrorActive (Binary Input Object Type) 33
5.3.17 ErrorAddress (Analog Input Object Type) 34
5.3.18 ErrorReset (Binary Output Object Type) 35
5.3.19 OnTimeCounter (Analog Value Object Type) 36
5.3.20 Occupancy (Multistate Value Object Type) 37
5.3.21 OccupiedCoolSetPoint (Analog Value Object Type) 38
5.3.22 OccupiedHeatSetPoint (Analog Value Object Type) 39
5.3.23 UnoccupiedCoolSetPoint (Analog Value Object Type) 39
5.3.24 UnoccupiedHeatSetPoint (Analog Value Object Type) 41
5.3.25 OccupancyContinuousCheck (Binary Value Object Type) 42
5.3.26 UnoccupiedDeadbandAction (Binary Value Object Type) 43
5.3.27 LockRemoteControl (Binary Value Object Type) 44
5.3.28 SerialNumber (Analog Input Object Type) 45
5.3.29 UserSetPoint_status (Analog Input Object Type) 46
5.3.30 VirtualTempActive (Binary Input Object Type) 47
5.3.31 FilterSignAddress (Analog Input Object Type) 48
6 Connections and switches 49
6.1 Connect to the Remote Controller bus 49
6.2 DIP switches 49
6.3 Connect to BACnet MS/TP 51
6.3.1 MS/TP MAC address switch configuration 51
6.3.2 MS/TP activation and baudrate 51
6.4 Connect to BACnet IP 51
6.4.1 BACnet Device Instance 51
7 Set-up process and troubleshooting 52
7.1 Pre-requisites 52
7.2 Physical checking 52
7.3 LED status 52
7.4 Occupancy 53
7.5 Configuration tool 55
7.5.1 Home 55
7.5.2 Configuration 56
7.5.3 Signals 56
8 AC Unit Types compatibility 58
9 Technical specs 59
10 Dimensions 59
11 Error codes 60

© HMS Industrial Networks S.L.U - All rights reserved
This information is subject to change without notice

1 Description

1.1 *Introduction*

This document describes the integration of Hitachi air conditioning systems into BACnet compatible devices and systems using the *INBACHIT001R000* gateway.

The aim of this integration is to monitor and control your Hitachi air conditioning system, remotely, from your Control Center using any commercial SCADA or monitoring software that includes a BACnet driver or connect it to other BACnet devices to do any automation. To do so, Intesis allows BACnet communication allowing polling or subscription requests (COV).

Intesis makes available the Hitachi air conditioning system indoor units through independent BACnet objects.

Abstraction of Hitachi air conditioning system properties and functionalities as fixed BACnet Objects. Intesis allows fixed BACnet object IDs mapping. Simple configuration is needed: just select the appropriate communication parameters (MAC address, baud rate…).

This document assumes that the user is familiar with BACnet and Hitachi technologies and their technical terms.

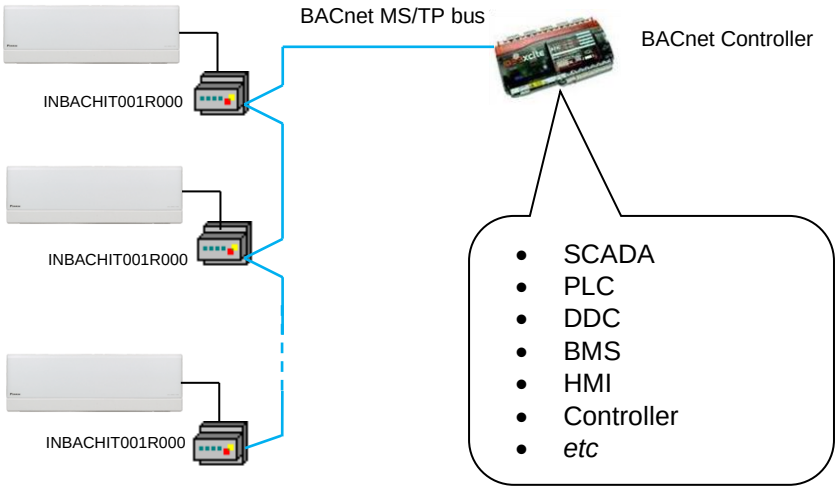

BACnet MS/TP installation sketch

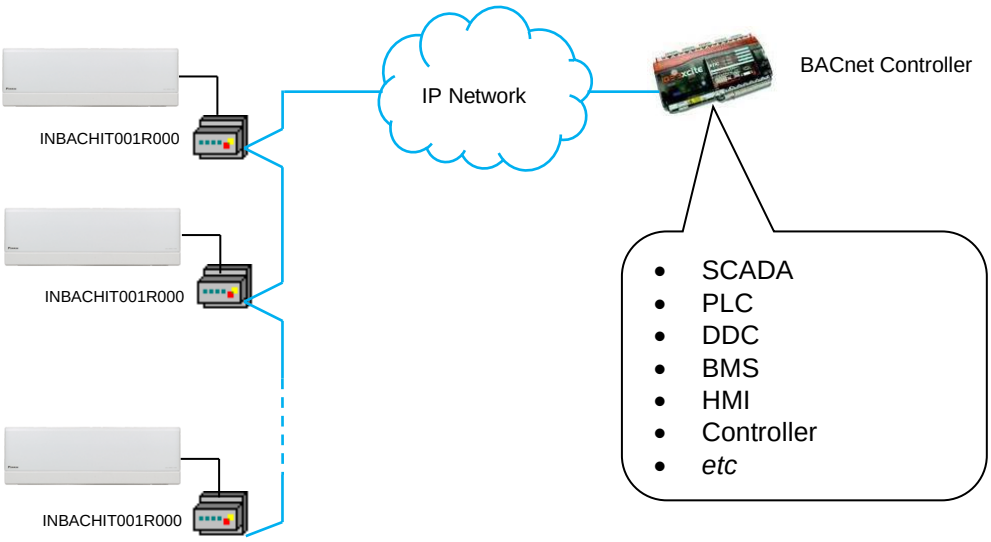

BACnet IP installation sketch

© HMS Industrial Networks S.L.U - All rights reserved
This information is subject to change without notice

1.2 *Functionality*

Intesis continuously reads the Hitachi AC system and keeps the updated status of all objects in its memory, ready to be served when requested from the BACnet side.

The role of Intesis is to associate the elements of the Hitachi AC system with BACnet objects.

The control of the indoor units through the INBACHIT001R000 is permitted, so commands towards the Hitachi AC units are permitted too.

The indoor unit is offered in a set of BACnet objects and extra functionalities.

1.3 *Capacity of Intesis*

Intesis is capable of integrating one or more Hitachi AC units and its associated elements.

Element	Max.	Notes
Number of indoor units	1*	Number of indoor units that can be controlled through Intesis
Number of Objects	33	Number of Hitachi AC signals available as objects into Intesis.

* **NOTE**: Keep in mind that more than one unit can be connected to the same INBACHIT001R000 gateway. You can control then more than one AC unit, but it will be actuated as a single unit. Different commands to different AC units connected to the same INBACHIT001R000 will not be allowed.

1.4 *Quick Setup*

1. Install Intesis in the desired installation site (DIN rail mounting inside a metallic industrial cabinet connected to ground is recommended).
2. Connect the communication cables. See section 6.1 Connect to the Remote Controller bus
3. Connect to the Intesis. Details in section 7.5. Configuration Tool
4. (Optional) Configure the Intesis using the configuration tool. Details in section 7.5.2.
5. Check the BACnet objects list for its integration to your BACnet project. Details in section 5.2.
6. Check if there is communication between BACnet and AC system. Details in section 7.5.3.
7. The Intesis is ready to be used in your system.

© HMS Industrial Networks S.L.U - All rights reserved
This information is subject to change without notice

2 Protocol Implementation Conformance Statement

BACnet Protocol Implementation Conformance Statement (PICS)

Date: *2014-12-05*
Vendor Name: *HMS Industrial Networks S.L.U*
Product Name: *INBACHIT001R000*
Product Model Number: *INBACHIT001R000*
Application Software Version: *1.0*
Firmware Revision: *1.0.0.0*
BACnet Protocol Revision: *12*

Product Description:

Hitachi air conditioning system – BACnet MS/TP & BACnet IP Gateway

Abstraction of Hitachi air conditioning system properties and functionalities as BACnet Objects.

2.1 *BACnet Standardized Device Profile (Annex L):*

☐ BACnet Operator Workstation (B-OWS)

☐ BACnet Building Controller (B-BC)

☐ BACnet Advanced Application Controller (B-AAC)

☒ BACnet Application Specific Controller (B-ASC)

☐ BACnet Smart Sensor (B-SS)

☐ BACnet Smart Actuator (B-SA)

Additional BACnet Interoperability Building Blocks Supported (Annex K):
Reference of BIBBs List

2.2 *Segmentation Capability:*

Segmented request supported	☐ No	☒ Yes	Window Size *16*
Segmented responses supported	☐ No	☒ Yes	Window Size *16*

2.3 *Data Link Layer Options:*

☒ BACnet IP, (Annex J)
☒ BACnet IP, (Annex J), Foreign Device
☐ ISO 8802-3, Ethernet (Clause 7)
☐ ANSI/ATA 878.1, 2.5 Mb. ARCNET (Clause 8)
☐ ANSI/ATA 878.1, RS-485 ARCNET (Clause 8), baud rate(s) ____
☒ MS/TP master (Clause 9), baud rate(s): 9600, 19200, 38400, 76800
☐ MS/TP slave (Clause 9), baud rate(s):
☐ Point-To-Point, EIA 232 (Clause 10), baud rate(s):
☐ Point-To-Point, modem, (Clause 10), baud rate(s):
☐ LonTalk, (Clause 11), medium: _____
☐ Other:

2.4 *Device Address Binding:*

© HMS Industrial Networks S.L.U - All rights reserved
This information is subject to change without notice

Is static device binding supported? (This is currently necessary for two-way communication with MS/TP slaves and certain other devices.) ☐ Yes ☒ No

2.5 *Networking Options:*

☐ Router, Clause 6 - List all routing configurations, e.g., ARCNET-Ethernet, Ethernet-MS/TP, etc.
☐ Annex H, BACnet Tunneling Router over IP
☐ BACnet/IP Broadcast Management Device (BBMD)
Does the BBMD support registrations by Foreign Devices? ☐ Yes ☐ No

2.6 *Character Sets Supported*

Indicating support for multiple character sets does not imply that they can all be supported simultaneously.

☒ ANSI X3.4
☐ IBM™/Microsoft™ DBCS
☐ JIS C 6226
☐ ISO 10646 (UCS-4)
☐ ISO 10646 (UCS-2)
☐ ISO 8859-1

2.7 *Gateway*

If this product is a communication gateway, describe the types of non-BACnet equipment/network(s) that the gateway supports:

Hitachi Commercial and VRF air conditioners

© HMS Industrial Networks S.L.U - All rights reserved
This information is subject to change without notice

3 BACnet Interoperability Building Blocks Supported (BIBBs)

3.1 *Data Sharing BIBBs*

BIBB Type		Active	BACnet Service	Initiate	Execute
DS-RP-A	Data Sharing-ReadProperty–A	☐	ReadProperty	☒	☐
DS-RP-B	Data Sharing-ReadProperty–B	☒	ReadProperty	☐	☒
DS-RPM-A	Data Sharing-ReadPropertyMultiple–A	☐	ReadPropertyMultiple	☒	☐
DS-RPM-B	Data Sharing-ReadPropertyMultiple–B	☒	ReadPropertyMultiple	☐	☒
DS-RPC-A	Data Sharing-ReadPropertyConditiona–A	☐	ReadPropertyConditional	☒	☐
DS-RPC-B	Data Sharing-ReadPropertyConditional–B	☐	ReadPropertyConditional	☐	☒
DS-WP-A	Data Sharing-WriteProperty–A	☐	WriteProperty	☒	☐
DS-WP-B	Data Sharing-WriteProperty–B	☒	WriteProperty	☐	☒
DS-WPM-A	Data Sharing-WritePropertyMultiple–A	☐	WritePropertyMultiple	☒	☐
DS-WPM-B	Data Sharing-WritePropertyMultiple–B	☒	WritePropertyMultiple	☐	☒
DS-COV-A	Data Sharing-COV–A	☐	SubscribeCOV	☒	☐
		☐	ConfirmedCOVNotification	☐	☒
		☐	UnconfirmedCOVNotification	☐	☒
DS-COV-B	Data Sharing-COV–B	☒	SubscribeCOV	☐	☒
		☒	ConfirmedCOVNotification	☒	☐
		☒	UnconfirmedCOVNotification	☒	☐
DS-COVP-A	Data Sharing-COVP–A	☐	SubscribeCOV	☒	☐
		☐	ConfirmedCOVNotification	☐	☒
		☐	UnconfirmedCOVNotification	☐	☒
DS-COVP-B	Data Sharing-COVP–B	☐	SubscribeCOV	☐	☒
		☐	ConfirmedCOVNotification	☒	☐
		☐	UnconfirmedCOVNotification	☒	☐
DS-COVU-A	Data Sharing-COV-Unsolicited–A	☐	UncofirmedCOVNotification	☐	☒
DS-COVU-B	Data Sharing-COV-Unsolicited-B	☐	UncofirmedCOVNotification	☒	☐

3.2 *Alarm and Event Management BIBBs*

BIBB Type		Active	BACnet Service	Initiate	Execute
AE-N-A	Alarm and Event-Notification–A	☐	ConfirmedEventNotification	☐	☒
		☐	UnconfirmedEventNotification	☐	☒
AE-N-I-B	Alarm and Event-Notification Internal–B	☐	ConfirmedEventNotification	☒	☐
		☐	UnconfirmedEventNotification	☒	☐
AE-N-E-B	Alarm and Event-Notification External–B	☐	ConfirmedEventNotification	☒	☐
		☐	UnconfirmedEventNotification	☒	☐
AE-ACK-A	Alarm and Event-ACK–A	☐	AcknowledgeAlarm	☒	☐
AE-ACK-B	Alarm and Event-ACK–B	☐	AcknowledgeAlarm	☐	☒
AE-ASUM-A	Alarm and Event-Summary–A	☐	GetAlarmSummary	☒	☐
AE-ASUM-B	Alarm and Event-Summary–B	☐	GetAlarmSummary	☐	☒
AE-ESUM-A	Event-Summary–A	☐	GetEnrollmentSummary	☒	☐
AE-ESUM-B	Event-Summary–B	☐	GetEnrollmentSummary	☐	☒
AE-INFO-A	Alarm and Event-Information–A	☐	GetEventInformation	☒	☐
AE-INFO-B	Alarm and Event-Information–B	☐	GetEventInformation	☐	☒
AE-LS-A	Alarm and Event-LifeSafety–A	☐	LifeSafetyOperation	☒	☐
AE-LS-B	Alarm and Event-LifeSafety–B	☐	LifeSafetyOperation	☐	☒

© HMS Industrial Networks S.L.U - All rights reserved
This information is subject to change without notice

3.3 *Scheduling BIBBs*

BIBB Type		Active	BACnet Service	Initiate	Execute
SCHED-A	Scheduling–A *(must support DS-RP-A and DS-WP-A)*	☐			
		☐			
SCHED-I-B	Scheduling-Internal–B *(shall support DS-RP-B and DS-WP-B)* *(shall also support ether DM-TS-B or DS-UTC-B)*	☐			
		☐			
SCHED-E-B	Scheduling-External–B *(shall support SCHED-I-B and DS-WP-A)*	☐			
		☐			
T-VMT-A	Trending - Viewing and Modifying Trends–A	☐	ReadRange	☐	☒
T-VMT-I-B	Trending - Viewing and Modifying Trends Inernal–B	☐	ReadRange	☐	☒
T-VMT-E-B	Trending - Viewing and Modifying Trends External–B	☐	ReadRange	☐	☒
T-ATR-A	Trending - Automated Trend Retrieval–A	☐	ConfirmedEventNotification	☐	☒
		☐	ReadRange	☒	☐
T-ATR-B	Trending - Automated Trend Retrieval–B	☐	ConfirmedEventNotification	☒	☐
		☐	ReadRange	☐	☒

3.4 *Trending BIBBs*

BIBB Type		Active	BACnet Service	Initiate	Execute
T-VMT-A	Trending - Viewing and Modifying Trends–A	☐	ReadRange	☒	☐
T-VMT-I-B	Trending - Viewing and Modifying Trends Inernal–B	☐	ReadRange	☐	☒
T-VMT-E-B	Trending - Viewing and Modifying Trends External–B	☐	ReadRange	☐	☒
T-ATR-A	Trending - Automated Trend Retrieval–A	☐	ConfirmedEventNotification	☐	☒
		☐	ReadRange	☒	☐
T-ATR-B	Trending - Automated Trend Retrieval–B	☐	ConfirmedEventNotification	☒	☐
		☐	ReadRange	☐	☒

3.5 *Network Management BIBBs*

BIBB Type		Active	BACnet Service	Initiate	Execute
NM-CE-A	Network Management - Connection Establishment–A	☐	Establish-Connection-To-Network	☒	☐
		☐	Disconnect-Connection-To-Network	☒	☐
NM-CE-B	Network Management - Connection Establishment– B	☐	Establish-Connection-To-Network	☐	☒
		☐	Disconnect-Connection-To-Network	☐	☒
NM-RC-A	Network Management - Router Configuration–A	☐	Who-Is-Router-To-Network	☒	☐
		☐	I-Am-Router-To-Network	☐	☒
		☐	I-Could-Be-Router-To-Network	☐	☒
		☐	Initialize-Routing-Table	☒	☐
		☐	Initialize-Routing-Table-Ack	☐	☒
NM-RC-B	Network Management - Router Configuration–B	☐	Who-Is-Router-To-Network	☒	☒
		☐	I-Am-Router-To-Network	☒	☒
		☐	Initialize-Routing-Table	☐	☒
		☐	Initialize-Routing-Table-Ack	☒	☐

© HMS Industrial Networks S.L.U - All rights reserved
This information is subject to change without notice

3.6 *Device Management BIBBs*

BIBB Type		Active	BACnet Service	Initiate	Execute
DM-DDB-A	Device Management - Dynamic Device Binding–A	☐	Who-Is	☒	☐
		☐	I-Am	☐	☒
DM-DDB-B	Device Management - Dynamic Device Binding–B	☒	Who-Is	☐	☒
		☒	I-Am	☒	☐
DM-DOB-A	Device Management - Dynamic Object Binding–A	☐	Who-Has	☒	☐
		☐	I-Have	☐	☒
DM-DOB-B	Device Management - Dynamic Object Binding–B	☒	Who-Has	☐	☒
		☒	I-Have	☒	☐
DM-DCC-A	Device Management - DeviceCommunicationControl–A	☐	DeviceCommunicationControl	☒	☐
DM-DCC-B	Device Management - DeviceCommunicationControl–B	☒	DeviceCommunicationControl	☐	☒
DM-PT-A	Device Management - PrivateTransfer–A	☐	ConfirmedPrivateTransfer	☒	☐
		☐	UnconfirmedPrivateTransfer	☒	☐
DM-PT-B	Device Management - PrivateTransfer–B	☐	ConfirmedPrivateTransfer	☐	☒
		☐	UnconfirmedPrivateTransfer	☐	☒
DM-TM-A	Device Management - Text Message–A	☐	ConfirmedTextMessage	☒	☐
		☐	UnconfirmedTextMessage	☒	☐
DM-TM-B	Device Management - Text Message–B	☐	ConfirmedTextMessage	☐	☒
		☐	UnconfirmedTextMessage	☐	☒
DM-TS-A	Device Management - TimeSynchronization–A	☐	TimeSynchronization	☒	☐
DM-TS-B	Device Management - TimeSynchronization–B	☐	TimeSynchronization	☐	☒
DM-UTC-A	Device Management - UTCTimeSynchronization–A	☐	UTCTimeSynchronization	☒	☐
DM-UTC-B	Device Management - UTCTimeSynchronization–B	☐	UTCTimeSynchronization	☐	☒
DM-RD-A	Device Management - ReinitializeDevice–A	☐	ReinitializeDevice	☒	☐
DM-RD-B	Device Management - ReinitializeDevice–B	☒	ReinitializeDevice	☐	☒
DM-BR-A	Device Management - Backup and Restore–A	☐	AtomicReadFile	☒	☐
		☐	AtomicWriteFile	☒	☐
		☐	CreateObject	☒	☐
		☐	ReinitializeDevice	☒	☐
DM-BR-B	Device Management - Backup and Restore–B	☐	AtomicReadFile	☐	☒
		☐	AtomicWriteFile	☐	☒
		☐	ReinitializeDevice	☐	☒
DM-R-A	Device Management - Restart–A	☐	UnconfimedCOVNotification	☐	☒
DM-R-B	Device Management - Restart–B	☐	UnconfimedCOVNotification	☒	☐
DM-LM-A	Device Management - List Manipulation–A	☐	AddListElement	☒	☐
		☐	RemoveListElement	☒	☐
DM-LM-B	Device Management - List Manipulation–B	☐	AddListElement	☐	☒
		☐	RemoveListElement	☐	☒
DM-OCD-A	Device Management - Object Creation and Deletion–A	☐	CreateObject	☒	☐
		☐	DeleteObject	☒	☐
DM-OCD-B	Device Management - Object Creation and Deletion–B	☐	CreateObject	☐	☒
		☐	DeleteObject	☐	☒
DM-VT-A	Device Management - Virtual Terminal–A	☐	VT-Open	☒	☐
		☐	VT-Close	☒	☒
		☐	VT-Data	☒	☒
DM-VT-B	Device Management - Virtual Terminal–B	☐	VT-Open	☐	☒
		☐	VT-Close	☒	☒
		☐	VT-Data	☒	☒

© HMS Industrial Networks S.L.U - All rights reserved
This information is subject to change without notice

4 Service Types

Service type	Service name	Supported	Remarks
Alarm and Event Services	AcknowledgeAlarm	☐	
	ConfirmedCOVNotification	☐	
	ConfirmedEventNotification	☐	
	GetAlarmSummary	☐	
	GetEnrollmentSummary	☐	
	SubscribeCOV	☒	
File Access Services	AtomicReadFile	☐	
	AtomicWriteFile	☐	
Object Access Services	AddListElement	☐	
	RemoveListElement	☐	
	CreateObject	☐	
	DeleteObject	☐	
	ReadProperty	☒	
	ReadPropertyConditional	☐	
	ReadPropertyMultiple	☒	
	ReadRange	☐	
	WriteProperty	☒	
	WritePropertyMultiple	☒	
Remote Device Management Services	DeviceComminicationControl	☐	
	ConfirmedPrivateTransfer	☐	
	ConfirmedTextMessage	☐	
	ReinitializeDevice	☒	
Virtual Terminal Services	VtOpen	☐	
	VtClose	☐	
	VtData	☐	
Security Services	Authenticate	☐	
	RequestKey	☐	
Unconfirmed Services	I-Am	☒	
	I-Have	☒	
	UnconfirmedCOVNotification	☐	
	UnconfirmedEventNotification	☐	
	UnconfirmedPrivateTransfer	☐	
	UnconfirmedTextMessage	☐	
	TimeSynchronization	☐	
	UtcTimeSynchronization	☐	
	Who-Has	☒	
	Who-Is	☒	
	LifeSafetyOperation	☐	
	SubscribeCOVProperty	☒	
	GetEventInformation	☐	

© HMS Industrial Networks S.L.U - All rights reserved
This information is subject to change without notice

5 Objects

5.1 *Supported Object Types*

The objects supported are shown in the table below.

Object Type	ID	Supported	Management Point
Analog-Input	0	☒	SetPoint_status RoomTemperature_status ErrorCode ErrorAddress SerialNumber UserSetPoint_status FilterSignAddress
Analog-Output	1	☒	SetPoint_command RoomTemperature_command
Analog-Value	2	☒	OnTimeCounter OccupiedCoolSetPoint OccupiedHeatSetPoint UnoccupiedCoolSetPoint UnoccupiedHeatSetPoint
Averaging	18	☐	
Binary-Input	3	☒	OnOff_status ErrorActive FIlterSign VirtualTempActive
Binary-Output	4	☒	OnOff_command FilterReset ErrorReset
Binary-Value	5	☒	OccupancyContinuousCheck UnoccupiedDeadbandAction LockRemoteControl
Calendar	6	☐	
Command	7	☐	
Device	8	☒	INBACHIT001R000
Event-Enrollment	9	☐	
File	10	☐	
Group	11	☐	
Life-Safety-Point	21	☐	
Life-Safety-Zone	22	☐	
Loop	12	☐	
Multistate-Input	13	☒	Mode_status FanSpeed_status AirDirectionUD_status ErrorCodeM
Multistate-Output	14	☒	Mode_command FanSpeed_command AirDirectionUD_command
Multistate-Value	19	☒	Occupancy
Notification-Class	15	☐	
Program	16	☐	
Schedule	17	☐	
Trend-Log	20	☐	

© HMS Industrial Networks S.L.U - All rights reserved
This information is subject to change without notice

5.2 *Member objects*

5.2.1 Type: Gateway

Object-name	Description	Object-type	Object-instance
INBACHIT001R000	Hitachi Commercial & VRF Interface	Device	246000*

5.2.2 Type: Indoor Unit

Object-name	Description	Object-type	Object-instance
OnOff_status		BI	0
OnOff_command		BO	0
Mode_status		MI	0
Mode_command		MO	0
SetPoint_status		AI	0
SetPoint_command		AO	0
FanSpeed_status		MI	1
FanSpeed_command		MO	1
AirDirectionUD_status		MI	2
AirDirectionUD_command		MO	2
RoomTemperature_status		AI	1
RoomTemperature_command		AO	1
ErrorCode		AI	2
ErrorCodeM		MI	4
ErrorActive		BI	1
ErrorAddress		AI	4
ErrorReset		BI	5
OnTimeCounter		AV	0
FilterSign		BI	6
FilterReset		BO	4
Occupancy		MV	0
OccupiedCoolSetPoint		AV	1
OccupiedHeatSetPoint		AV	2
UnoccupiedCoolSetPoint		AV	3
UnoccupiedHeatSetPoint		AV	4
OccupancyContinuousCheck		BV	0
UnoccupiedDeadbandAction		BV	1
LockRemoteControl		BV	2
UserSetPoint_status		AI	17
VirtualTempActive		BI	14
FilterSignAddress		AI	18

* This is the default value. Check section 5.3 (below) for more information.

© HMS Industrial Networks S.L.U - All rights reserved
This information is subject to change without notice

5.3 *Objects and properties*

Below you can find relevant information for the objects and properties.

Object_Identifier: In the **Device Object**, is configurable writing directly on the property. either from BACnet or through our configuration tools and can be set automatically or manually. When set automatically, it is set using a base address and the address selected in SW2 P1..P7. The base address can be selected using the configuration tool. When set manually, the address is directly the one configured on the configuration tool. See section 7.4 for more information

Object_Name: In the **Device Object**, is configurable writing directly on this property. This can be done using the configuration tools too. See section 7.5 for more information.

Description: In the **Device Object**, is configurable writing directly on the property, length maximum 63 chars. This string is configurable using the configuration tool. See section 7.5 for more information.

5.3.1 Hitachi AC Gateway (Device Object Type)

Property Identifier	Property Datatype	Value	ASHRAE	IBOX
Object_Identifier	BACnetObjectIdentifier	(Device, 246000)	R	R
Object_Name	CharacterString	" INBACHIT001R000 "	R	W
Object_Type	BACnetObjectType	DEVICE (8) (Device Object Type)	R	R
System_Status	BACnetDeviceStatus	OPERATIONAL (0)	R	R
Vendor_Name	CharacterString	"HMS Industrial Networks S.L.U"	R	R
Vendor_Identifier	Unsigned16	246	R	R
Model_Name	CharacterString	"INBACHIT001R000 "	R	R
Firmware_Revision	CharacterString	"1.0.0.0"	R	R
Application_Software_ Version	CharacterString	"1.0.0.0"	R	R
Location	CharacterString	""	O	-
Description	CharacterString	"Hitachi RC interface"	O	R
Protocol_Version	Unsigned	1	R	R
Protocol_Revision	Unsigned	12	R	R
Protocol_Services_ Supported	BACnetServiceSupported	Refer to section 4 [Service Types]	R	R
Protocol_Object_Types_ Supported	BACnetObjectTypes Supported	Refer to section 5.1 [Object Types]	R	R
Object_List	BACnetArray[N] of BACnetObjectIdentifier	BACnetARRAY[N]	R	R
Structured_Object_List	BACnetArray[N] of BACnetObjectIdentifier	-	O	-
Max_APDU_Length_ Accepted	Unsigned	480 when MSTP / 1476 when BACnet/IP	R	R
Segmentation_Supported	BACnetSegmentation	SEGMENTED-BOTH (0)	R	R
Max_Segments_accepted	Unsigned	16	O	R
VT_Classes_Supported	List of BACnetVTClass	-	O	-
Active_VT_Sessions	List of BACnetVTSession	-	O	-
Local_Date	Date	-	O	-

© HMS Industrial Networks S.L.U - All rights reserved
This information is subject to change without notice

Local_Time	Time	-	O	-
UTC_Offset	INTEGER	-	O	-
Daylight_Savings_Status	BOOLEAN	-	O	-
APDU_Segment_Timeout	Unsigned	3000	R	R
APDU_Timeout	Unsigned	3000	R	R
Number_of_APDU_ Retries	Unsigned	3	R	R
List_Of_Session_Keys	List of BACnetSessionKey	-	O	-
Time_Synchronization_ Recipients	List of BACnetRecipient	-	O	-
Max_Master * **	Unsigned	127	R	W
Max_Info_Frames *	Unsigned	1	O	R
Device_Address_Binding	List of BACnetAddressBinding	NULL (empty)	R	R
Database_Revision	Unsigned	0	R	R
Configuration_Files	BACnetArray[N] of BACnetObjectIdentifier	-	O	-
Last_Restore_Time	BACnetTimeStamp	-	O	-
Backup_Failure_Timeout	Unsigned16	-	O	-
Active_COV_ Subscriptions	List of BACnetCOVSubscription	List of BACnetCOVSubscription	O	R
Slave_Proxy_Enable	BACnetArray[N] of BOOLEAN	-	O	-
Manual_Slave_Address_ Binding	List of BACnetAddressBinding	-	O	-
Auto_Slave_Discovery	BACnetArray[N] of BOOLEAN	-	O	-
Slave_Address_Binding	BACnetAddressBinding	-	O	-
Last_Restart_Reason	BACnetRestartReason	-	O	-
Time_Of_Device_Restart	BACnetTimeStamp	-	O	-
Restart_Notification_ Recipients	List of BACnetRecipient	-	O	-
UTC_Time_ Synchronization_ Recipients	List of BACnetRecipient	-	O	-
Time_Synchronization_ Interval	Unsigned	-	O	-
Align_Intervals	BOOLEAN	-	O	-
Interval_Offset	Unsigned	-	O	-
Profile_Name	CharacterString	-	O	-

* Only available when MSTP is used

** Configurable through the configuration tool. See section 7.5 for more information.

© HMS Industrial Networks S.L.U - All rights reserved
This information is subject to change without notice

5.3.2 OnOff_status (Binary Input Object Type)

It indicates if the indoor unit is in On or Off status.

Property Identifier	Property Datatype	Value	ASHRAE	IBOX
Object_Identifier	BACnetObjectIdentifier	(Binary Input, 0)	R	R
Object_Name	CharacterString	“OnOff_status”	R	R
Object_Type	BACnetObjectType	BINARY_INPUT (3)	R	R
Present_Value	BACnetBinaryPV	INACTIVE (0) / ACTIVE (1)	R	R
Description	CharacterString	-	O	-
Device_Type	CharacterString	-	O	-
Status_Flags	BACnetStatusFlags	{FALSE, FALSE/TRUE, FALSE, FALSE}	R	R
Event_State	BACnetEventState	STATE_NORMAL (0)	R	R
Reliability	BACnetReliability	NO_FAULT_DETECTED (0), UNRELIABLE_OTHER (7)	O	R
Out_Of_Service	BOOLEAN	FALSE	R	R
Polarity	BACnetPolarity	NORMAL (0)	R	R
Inactive_Text	CharacterString	"Off"	O	R
Active_Text	CharacterString	“On”	O	R
Change_Of_State_Time	BACnetDatetime	-	O	-
Change_Of_State_Count	Unsigned	-	O	-
Time_Of_State_Count_Reset	BACnetDatetime	-	O	-
Elapsed_Active_Time	Unsigned	-	O	-
Time_Of_Active_Time_Reset	BACnetDatetime	-	O	-
Time_Delay	Unsigned	-	O	-
Notification_Class	Unsigned	-	O	-
Alarm_Value	BACnetBinaryPV	-	O	-
Event_Enable	BACnetEventTransitionBits	-	O	-
Acked_Transitions	BACnetEventTransitionBits	-	O	-
Notify_Type	BACnetNotifyType	-	O	-
Event_Time_Stamps	BACnetArray[N] of BACnetTimeStamp	-	O	-
Profile_Name	CharacterString	-	O	-

© HMS Industrial Networks S.L.U - All rights reserved
This information is subject to change without notice

5.3.3 OnOff_command (Binary Output Object Type)

It sets the indoor unit to On or Off.

Property Identifier	Property Datatype	Value	ASHRAE	IBOX
Object_Identifier	BACnetObjectIdentifier	(Binary Output, 0)	R	R
Object_Name	CharacterString	“OnOff_command”	R	R
Object_Type	BACnetObjectType	BINARY_OUTPUT (4)	R	R
Present_Value	BACnetBinaryPV	INACTIVE (0) / ACTIVE (1)	W	W
Description	CharacterString	-	O	-
Device_Type	CharacterString	-	O	-
Status_Flags	BACnetStatusFlags	{FALSE, FALSE, FALSE, FALSE}	R	R
Event_State	BACnetEventState	STATE_NORMAL (0)	R	R
Reliability	BACnetReliability	NO_FAULT_DETECTED (0)	O	R
Out_Of_Service	BOOLEAN	FALSE	R	R
Polarity	BACnetPolarity	NORMAL (0)	R	R
Inactive_Text	CharacterString	"Off"	O	R
Active_Text	CharacterString	“On"	O	R
Change_Of_State_Time	BACnetDatetime	-	O	-
Change_Of_State_Count	Unsigned	-	O	-
Time_Of_State_Count_Reset	BACnetDatetime	-	O	-
Elapsed_Active_Time	Unsigned	-	O	-
Time_Of_Active_Time_Reset	BACnetDatetime	-	O	-
Minimum_Off_Time	Unsigned32	-	O	-
Minimum_On_Time	Unsigned32	-	O	-
Priority_Array	BACnetPriorityArray	BACnetPriorityArray	R	R
Relinquish_Default	BACnetBinaryPV	INACTIVE (0)	R	R
Time_Delay	Unsigned	-	O	-
Notification_Class	Unsigned	-	O	-
Feedback_Value	BACnetBinaryPV	-	O	-
Event_Enable	BACnetEventTransitionBits	-	O	-
Acked_Transitions	BACnetEventTransitionBits	-	O	-
Notify_Type	BACnetNotifyType	-	O	-
Event_Time_Stamps	BACnetArray[N] of BACnetTimeStamp	-	O	-
Profile_Name	CharacterString	-	O	-

© HMS Industrial Networks S.L.U - All rights reserved
This information is subject to change without notice

5.3.4 Mode_status (Multistate Input Object Type)

It indicates the active mode for the indoor unit.

Property Identifier	Property Datatype	Value	ASHRAE	IBOX
Object_Identifier	BACnetObjectIdentifier	(Multi-state Input, 0)	R	R
Object_Name	CharacterString	"Mode_status"	R	R
Object_Type	BACnetObjectType	MULTISTATE_INPUT (13)	R	R
Present_Value	Unsigned	1 ~ 5	R	R
Description	CharacterString	-	O	-
Device_Type	CharacterString	-	O	-
Status_Flags	BACnetStatusFlags	{FALSE, FALSE/TRUE, FALSE, FALSE}	R	R
Event_State	BACnetEventState	STATE_NORMAL (0)	R	R
Reliability	BACnetReliability	NO_FAULT_DETECTED (0), UNRELIABLE_OTHER (7)	O	R
Out_Of_Service	BOOLEAN	FALSE	R	R
Number_Of_States	Unsigned	5	R	R
State_Text	BACnetArray[N] of CharacterString	*Check **Mode Status setting table** below.*	O	R
Time_Delay	Unsigned	-	O	-
Notification_Class	Unsigned	-	O	-
Alarm_Values	List of Unsigned	-	O	-
Fault_Values	List of Unsigned	-	O	-
Event_Enable	BACnetEventTransitionBits	-	O	-
Acked_Transitions	BACnetEventTransitionBits	-	O	-
Notify_Type	BACnetNotifyType	-	O	-
Event_Time_Stamps	BACnetArray[N] of BACnetTimeStamp	-	O	-
Profile_Name	CharacterString	-	O	-

Mode status setting table

Mode status interpretation is possible using the value in the following correspondence table.

Present_Value	Contents displayed in State_Text
1	Heat
2	Cool
3	Fan
4	Dry
5	Auto

© HMS Industrial Networks S.L.U - All rights reserved
This information is subject to change without notice

5.3.5 Mode_command (Multistate Output Object Type)

It allows control over the indoor unit's mode.

Property Identifier	Property Datatype	Value	ASHRAE	IBOX
Object_Identifier	BACnetObjectIdentifier	(Multi-state Output, 0)	R	R
Object_Name	CharacterString	"Mode_command"	R	R
Object_Type	BACnetObjectType	MULTISTATE_OUTPUT (14)	R	R
Present_Value	Unsigned	1 ~ 5	W	W
Description	CharacterString	-	O	-
Device_Type	CharacterString	-	O	-
Status_Flags	BACnetStatusFlags	{FALSE, FALSE, FALSE, FALSE}	R	R
Event_State	BACnetEventState	STATE_NORMAL (0)	R	R
Reliability	BACnetReliability	NO_FAULT_DETECTED (0)	O	R
Out_Of_Service	BOOLEAN	FALSE	R	R
Number_Of_States	Unsigned	5	R	R
State_Text	BACnetArray[N] of CharacterString	*Check **Mode Command setting table** below*	O	R
Priority_Array	BACnetPriorityArray	BACnetPriorityArray	R	R
Relinquish_Default	Unsigned	1	R	R
Time_Delay	Unsigned	-	O	-
Notification_Class	Unsigned	-	O	-
Feedback_Value	Unsigned	-	O	-
Event_Enable	BACnetEventTransitionBits	-	O	-
Acked_Transitions	BACnetEventTransitionBits	-	O	-
Notify_Type	BACnetNotifyType	-	O	-
Event_Time_Stamps	BACnetArray[N] of BACnetTimeStamp	-	O	-
Profile_Name	CharacterString	-	O	-

Mode Command setting table

Mode commands can be set using the values in the following correspondence table.

Present_Value	Contents displayed in State_Text
1	Heat
2	Cool
3	Fan
4	Dry
5	Auto

© HMS Industrial Networks S.L.U - All rights reserved
This information is subject to change without notice

5.3.6 Setpoint_status (Analog Input Object Type)

It indicates the current setpoint temperature in the indoor unit.

Property Identifier	Property Datatype	Value	ASHRAE	IBOX
Object_Identifier	BACnetObjectIdentifier	(Analog Input, 0)	R	R
Object_Name	CharacterString	“SetPoint_status”	R	R
Object_Type	BACnetObjectType	ANALOG_INPUT (0)	R	R
Present_Value	REAL	16…32 ºC 60…90 ºF	R	R
Description	CharacterString	-	O	-
Device_Type	CharacterString	-	O	-
Status_Flags	BACnetStatusFlags	{FALSE, FALSE/TRUE, FALSE, FALSE}	R	R
Event_State	BACnetEventState	STATE_NORMAL (0)	R	R
Reliability	BACnetReliability	NO_FAULT_DETECTED (0), UNRELIABLE_OTHER (7)	O	R
Out_Of_Service	BOOLEAN	FALSE	R	R
Update_Interval	Unsigned	-	O	-
Units **	BACnetEngineeringUnits	Degrees Celsius (62), Degrees Fahrenheit (64)	R	R
Min_Pres_Value	REAL	16 ºC // 60 ºF	O	R
Max_Pres_Value	REAL	32 ºC // 90 ºF	O	R
Resolution	REAL	-	O	-
COV_Increment	REAL	0	O	W
Time_Delay	Unsigned	-	O	-
Notification_Class	Unsigned	-	O	-
High_Limit	REAL	-	O	-
Low_Limit	REAL	-	O	-
Deadband	REAL	-	O	-
Limit_Enable	BACnetLimitEnable	-	O	-
Event_Enable	BACnetEventTransitionBits	-	O	-
Acked_Transitions	BACnetEventTransitionBits	-	O	-
Notify_Type	BACnetNotifyType	-	O	-
Event_Time_Stamps	BACnetArray[N] of BACnetTimeStamp	-	O	-
Profile_Name	CharacterString	-	O	-

** Use of Celsius or Fahrenheits units can be selected throught the switch configuration. Check section 6.1 for more information.

© HMS Industrial Networks S.L.U - All rights reserved
This information is subject to change without notice

5.3.7 Setpoint_command (Analog Output Object Type)

It sets the desired temperature in the indoor unit.

Property Identifier	Property Datatype	Value	ASHRAE	IBOX
Object_Identifier	BACnetObjectIdentifier	(Analog Output, 0)	R	R
Object_Name	CharacterString	“SetPoint_command”	R	R
Object_Type	BACnetObjectType	ANALOG_OUTPUT (1)	R	R
Present_Value	REAL	16…32 ºC 60…90 ºF	R	R
Description	CharacterString	-	O	-
Device_Type	CharacterString	-	O	-
Status_Flags	BACnetStatusFlags	{FALSE, FALSE, FALSE, FALSE}	R	R
Event_State	BACnetEventState	STATE_NORMAL (0)	R	R
Reliability	BACnetReliability	NO_FAULT_DETECTED (0)	O	R
Out_Of_Service	BOOLEAN	FALSE	R	R
Update_Interval	Unsigned	-	O	-
Units **	BACnetEngineeringUnits	Degrees Celsius (62), Degrees Fahrenheit (64)	R	R
Min_Pres_Value	REAL	16 ºC // 60 ºF	O	R
Max_Pres_Value	REAL	32 ºC // 90 ºF	O	R
Resolution	REAL	-	O	-
COV_Increment	REAL	0	O	W
Priority_Array	BACnetPriorityArray	BACnetPriorityArray	R	R
Relinquish_Default	Unsigned	22	R	R
Time_Delay	Unsigned	-	O	-
Notification_Class	Unsigned	-	O	-
High_Limit	REAL	-	O	-
Low_Limit	REAL	-	O	-
Deadband	REAL	-	O	-
Limit_Enable	BACnetLimitEnable	-	O	-
Event_Enable	BACnetEventTransitionBits	-	O	-
Acked_Transitions	BACnetEventTransitionBits	-	O	-
Notify_Type	BACnetNotifyType	-	O	-
Event_Time_Stamps	BACnetArray[N] of BACnetTimeStamp	-	O	-
Profile_Name	CharacterString	-	O	-

** Use of Celsius or Fahrenheits units can be selected throught the switch configuration. Check section 6.1 for more information.

© HMS Industrial Networks S.L.U - All rights reserved
This information is subject to change without notice

5.3.8 FanSpeed_status (Multistate Input Object Type)

It indicates the fan speed status of the indoor unit.

Property Identifier	Property Datatype	Value	ASHRAE	IBOX
Object_Identifier	BACnetObjectIdentifier	(Multi-state Input, 1)	R	R
Object_Name	CharacterString	"FanSpeed_status"	R	R
Object_Type	BACnetObjectType	MULTISTATE_INPUT (13)	R	R
Present_Value	Unsigned	1 ~ 5	R	R
Description	CharacterString	-	O	-
Device_Type	CharacterString	-	O	-
Status_Flags	BACnetStatusFlags	{FALSE, FALSE/TRUE, FALSE, FALSE}	R	R
Event_State	BACnetEventState	STATE_NORMAL (0)	R	R
Reliability	BACnetReliability	NO_FAULT_DETECTED (0), UNRELIABLE_OTHER (7)	O	R
Out_Of_Service	BOOLEAN	FALSE/TRUE	R	R
Number_Of_States	Unsigned	5	R	R
State_Text	BACnetArray[N] of CharacterString	*Check **Fan Speed status setting table** below.*	O	R
Time_Delay	Unsigned	-	O	-
Notification_Class	Unsigned	-	O	-
Alarm_Values	List of Unsigned	-	O	-
Fault_Values	List of Unsigned	-	O	-
Event_Enable	BACnetEventTransitionBits	-	O	-
Acked_Transitions	BACnetEventTransitionBits	-	O	-
Notify_Type	BACnetNotifyType	-	O	-
Event_Time_Stamps	BACnetArray[N] of BACnetTimeStamp	-	O	-
Profile_Name	CharacterString	-	O	-

Fan Speed status setting table

Fan speed interpretation is possible using the value in the following correspondence table.

Present_Value	Contents displayed in State_Text
1	Auto
2	Fan Speed 1
3	Fan Speed 2
4	Fan Speed 3
5	Fan Speed 4

© HMS Industrial Networks S.L.U - All rights reserved
This information is subject to change without notice

5.3.9 FanSpeed_command (Multistate Output Object Type)

It allows control over the fan speed for the indoor unit.

Property Identifier	Property Datatype	Value	ASHRAE	IBOX
Object_Identifier	BACnetObjectIdentifier	(Multi-state Output, 1)	R	R
Object_Name	CharacterString	“FanSpeed_command”	R	R
Object_Type	BACnetObjectType	MULTISTATE_OUTPUT (14)	R	R
Present_Value	Unsigned	1 ~ 5	W	W
Description	CharacterString	-	O	-
Device_Type	CharacterString	-	O	-
Status_Flags	BACnetStatusFlags	{FALSE, FALSE, FALSE, FALSE}	R	R
Event_State	BACnetEventState	STATE_NORMAL (0)	R	R
Reliability	BACnetReliability	NO_FAULT_DETECTED (0)	O	R
Out_Of_Service	BOOLEAN	FALSE	R	R
Number_Of_States	Unsigned	5	R	R
State_Text	BACnetArray[N] of CharacterString	*Check **Fan Speed command setting table** below*	O	R
Priority_Array	BACnetPriorityArray	BACnetPriorityArray	R	R
Relinquish_Default	Unsigned	1	R	R
Time_Delay	Unsigned	-	O	-
Notification_Class	Unsigned	-	O	-
Feedback_Value	Unsigned	-	O	-
Event_Enable	BACnetEventTransitionBits	-	O	-
Acked_Transitions	BACnetEventTransitionBits	-	O	-
Notify_Type	BACnetNotifyType	-	O	-
Event_Time_Stamps	BACnetArray[N] of BACnetTimeStamp	-	O	-
Profile_Name	CharacterString	-	O	-

Fan Speed command setting table

Fan speed interpretation is possible using the value in the following correspondence table.

Present_Value	Contents displayed in State_Text
1	Auto
2	Fan Speed 1
3	Fan Speed 2
4	Fan Speed 3
5	Fan Speed 4

© HMS Industrial Networks S.L.U - All rights reserved
This information is subject to change without notice

5.3.10 AirDirectionUD_status (Multistate Input Object Type)

It indicates the status of the vertical vane (Up/Down) for the indoor unit.

Property Identifier	Property Datatype	Value	ASHRAE	IBOX
Object_Identifier	BACnetObjectIdentifier	(Multi-state Input, 2)	R	R
Object_Name	CharacterString	“AirDirectionUD_status”	R	R
Object_Type	BACnetObjectType	MULTISTATE_INPUT (13)	R	R
Present_Value	Unsigned	1 ~ 8	R	R
Description	CharacterString	-	O	-
Device_Type	CharacterString	-	O	-
Status_Flags	BACnetStatusFlags	{FALSE, FALSE/TRUE, FALSE, FALSE}	R	R
Event_State	BACnetEventState	STATE_NORMAL (0)	R	R
Reliability	BACnetReliability	NO_FAULT_DETECTED (0), UNRELIABLE_OTHER (7)	O	R
Out_Of_Service	BOOLEAN	FALSE/TRUE	R	R
Number_Of_States	Unsigned	8	R	R
State_Text	BACnetArray[N] of CharacterString	*Check **Air Direction Status table** below.*	O	R
Time_Delay	Unsigned	-	O	-
Notification_Class	Unsigned	-	O	-
Alarm_Values	List of Unsigned	-	O	-
Fault_Values	List of Unsigned	-	O	-
Event_Enable	BACnetEventTransitionBits	-	O	-
Acked_Transitions	BACnetEventTransitionBits	-	O	-
Notify_Type	BACnetNotifyType	-	O	-
Event_Time_Stamps	BACnetArray[N] of BACnetTimeStamp	-	O	-
Profile_Name	CharacterString	-	O	-

Air direction Up/Down status table

Air direction interpretation is possible using the value in the following correspondence table.

Pesent_Value	Contents displayed in State_Text
1	POS1
2	POS2
3	POS3
4	POS4
5	POS5
6	POS6
7	POS7
8	SWING

© HMS Industrial Networks S.L.U - All rights reserved
This information is subject to change without notice

5.3.11 AirDirectionUD_command (Multistate Output Object Type)

It allows control over the vertical air direction (Up/Down) for the indoor unit.

Property Identifier	Property Datatype	Value	ASHRAE	IBOX
Object_Identifier	BACnetObjectIdentifier	(Multi-state Output, 2)	R	R
Object_Name	CharacterString	“AirDirectionUD_command”	R	R
Object_Type	BACnetObjectType	MULTISTATE_OUTPUT (14)	R	R
Present_Value	Unsigned	1 ~ 8	W	W
Description	CharacterString	-	O	-
Device_Type	CharacterString	-	O	-
Status_Flags	BACnetStatusFlags	{FALSE, FALSE, FALSE, FALSE}	R	R
Event_State	BACnetEventState	STATE_NORMAL (0)	R	R
Reliability	BACnetReliability	NO_FAULT_DETECTED (0)	O	R
Out_Of_Service	BOOLEAN	FALSE	R	R
Number_Of_States	Unsigned	8	R	R
State_Text	BACnetArray[N] of CharacterString	*Check **Air Direction Command table** below*	O	R
Priority_Array	BACnetPriorityArray	-	R	R
Relinquish_Default	Unsigned	-	R	R
Time_Delay	Unsigned	-	O	-
Notification_Class	Unsigned	-	O	-
Feedback_Value	Unsigned	-	O	-
Event_Enable	BACnetEventTransitionBits	-	O	-
Acked_Transitions	BACnetEventTransitionBits	-	O	-
Notify_Type	BACnetNotifyType	-	O	-
Event_Time_Stamps	BACnetArray[N] of BACnetTimeStamp	-	O	-
Profile_Name	CharacterString	-	O	-

Air direction Up/Down Command table

Air direction commands can be set using the values in the following correspondence table.

Present_Value	Contents displayed in State_Text
1	POS1
2	POS2
3	POS3
4	POS4
5	POS5
6	POS6
7	POS7
8	SWING

© HMS Industrial Networks S.L.U - All rights reserved
This information is subject to change without notice

5.3.12 RoomTemperature_status (Analog Input Object Type)

It indicates the room temperature from the sensor in the indoor unit.

Property Identifier	Property Datatype	Value	ASHRAE	IBOX
Object_Identifier	BACnetObjectIdentifier	(Analog Input, 0)	R	R
Object_Name	CharacterString	“RoomTemperature_status”	R	R
Object_Type	BACnetObjectType	ANALOG_INPUT (0)	R	R
Present_Value	REAL	-10…50	R	R
Description	CharacterString	-	O	-
Device_Type	CharacterString	-	O	-
Status_Flags	BACnetStatusFlags	{FALSE, FALSE/TRUE, FALSE, FALSE}	R	R
Event_State	BACnetEventState	STATE_NORMAL (0)	R	R
Reliability	BACnetReliability	NO_FAULT_DETECTED (0), UNRELIABLE_OTHER (7)	O	R
Out_Of_Service	BOOLEAN	FALSE/TRUE	R	R
Update_Interval	Unsigned	-	O	-
Units	BACnetEngineeringUnits	Degrees Celsius (62) Degrees Fahrenheit (64)	R	R
Min_Pres_Value	REAL	-	O	-
Max_Pres_Value	REAL	-	O	-
Resolution	REAL	-	O	-
COV_Increment	REAL	0	O	W
Time_Delay	Unsigned	-	O	-
Notification_Class	Unsigned	-	O	-
High_Limit	REAL	-	O	-
Low_Limit	REAL	-	O	-
Deadband	REAL	-	O	-
Limit_Enable	BACnetLimitEnable	-	O	-
Event_Enable	BACnetEventTransitionBits	-	O	-
Acked_Transitions	BACnetEventTransitionBits	-	O	-
Notify_Type	BACnetNotifyType	-	O	-
Event_Time_Stamps	BACnetArray[N] of BACnetTimeStamp	-	O	-
Profile_Name	CharacterString	-	O	-

© HMS Industrial Networks S.L.U - All rights reserved
This information is subject to change without notice

5.3.13 RoomTemperature_command (Analog Output Object Type)

It sets the room temperature to be used on the Hitachi Ac system.

Property Identifier	Property Datatype	Value	ASHRAE	IBOX
Object_Identifier	BACnetObjectIdentifier	(Analog Output, 1)	R	R
Object_Name	CharacterString	“RoomTemperature_command”	R	R
Object_Type	BACnetObjectType	ANALOG_INPUT (0)	R	R
Present_Value	REAL	-10…50	R	R
Description	CharacterString	-	O	-
Device_Type	CharacterString	-	O	-
Status_Flags	BACnetStatusFlags	{FALSE, FALSE, FALSE, FALSE}	R	R
Event_State	BACnetEventState	STATE_NORMAL (0)	R	R
Reliability	BACnetReliability	NO_FAULT_DETECTED (0)	O	R
Out_Of_Service	BOOLEAN	FALSE	R	R
Update_Interval	Unsigned	-	O	-
Units **	BACnetEngineeringUnits	Degrees Celsius (62) Degrees Fahrenheit (64)	R	R
Min_Pres_Value	REAL	-	O	-
Max_Pres_Value	REAL	-	O	-
Resolution	REAL	-	O	-
COV_Increment	REAL	0	O	W
Priority_Array	BACnetPriorityArray	BACnetPriorityArray	R	R
Relinquish_Default	Unsigned	22	R	R
Time_Delay	Unsigned	-	O	-
Notification_Class	Unsigned	-	O	-
High_Limit	REAL	-	O	-
Low_Limit	REAL	-	O	-
Deadband	REAL	-	O	-
Limit_Enable	BACnetLimitEnable	-	O	-
Event_Enable	BACnetEventTransitionBits	-	O	-
Acked_Transitions	BACnetEventTransitionBits	-	O	-
Notify_Type	BACnetNotifyType	-	O	-
Event_Time_Stamps	BACnetArray[N] of BACnetTimeStamp	-	O	-
Profile_Name	CharacterString	-	O	-

** Use of Celsius or Fahrenheits units can be selected throught the switch configuration. Check section 6.1 for more information.

© HMS Industrial Networks S.L.U - All rights reserved
This information is subject to change without notice

5.3.14 ErrorCode (Analog Input Object Type)

It indicates the current error present in the AC system. Check section 11 for more information about each error code.

Property Identifier	Property Datatype	Value	ASHRAE	IBOX
Object_Identifier	BACnetObjectIdentifier	(Analog Input, 2)	R	R
Object_Name	CharacterString	“ErrorCode”	R	R
Object_Type	BACnetObjectType	ANALOG_INPUT (0)	R	R
Present_Value	REAL	-1… 349*	R	R
Description	CharacterString	-	O	-
Device_Type	CharacterString	-	O	-
Status_Flags	BACnetStatusFlags	{FALSE, FALSE, FALSE, FALSE}	R	R
Event_State	BACnetEventState	STATE_NORMAL (0)	R	R
Reliability	BACnetReliability	NO_FAULT_DETECTED (0)	O	R
Out_Of_Service	BOOLEAN	FALSE	R	R
Update_Interval	Unsigned	300	O	-
Units	BACnetEngineeringUnits	NO_UNITS (95)	R	R
Min_Pres_Value	REAL	-	O	-
Max_Pres_Value	REAL	-	O	-
Resolution	REAL	-	O	-
COV_Increment	REAL	0	O	W
Time_Delay	Unsigned	-	O	-
Notification_Class	Unsigned	-	O	-
High_Limit	REAL	-	O	-
Low_Limit	REAL	-	O	-
Deadband	REAL	-	O	-
Limit_Enable	BACnetLimitEnable	-	O	-
Event_Enable	BACnetEventTransitionBits	-	O	-
Acked_Transitions	BACnetEventTransitionBits	-	O	-
Notify_Type	BACnetNotifyType	-	O	-
Event_Time_Stamps	BACnetArray[N] of BACnetTimeStamp	-	O	-
Profile_Name	CharacterString	-	O	-

© HMS Industrial Networks S.L.U - All rights reserved
This information is subject to change without notice

5.3.15 ErrorCodeM (Multistate Input Object Type)

It indicates the current error present in the AC system. Check section 11. Error Codes for more information.

Property Identifier	Property Datatype	Value	ASHRAE	IBOX
Object_Identifier	BACnetObjectIdentifier	(Multi-state Input, 4)	R	R
Object_Name	CharacterString	“ErrorCodeM”	R	R
Object_Type	BACnetObjectType	MULTISTATE_INPUT (13)	R	R
Present_Value	Unsigned	1 ~ 45	R	R
Description	CharacterString	-	O	-
Device_Type	CharacterString	-	O	-
Status_Flags	BACnetStatusFlags	{FALSE, FALSE, FALSE, FALSE}	R	R
Event_State	BACnetEventState	STATE_NORMAL (0)	R	R
Reliability	BACnetReliability	NO_FAULT_DETECTED (0)	O	R
Out_Of_Service	BOOLEAN	FALSE	R	R
Number_Of_States	Unsigned	44	R	R
State_Text	BACnetArray[N] of CharacterString	*Check **Error Code table** below.*	O	R
Time_Delay	Unsigned	-	O	-
Notification_Class	Unsigned	-	O	-
Alarm_Values	List of Unsigned	-	O	-
Fault_Values	List of Unsigned	-	O	-
Event_Enable	BACnetEventTransitionBits	-	O	-
Acked_Transitions	BACnetEventTransitionBits	-	O	-
Notify_Type	BACnetNotifyType	-	O	-
Event_Time_Stamps	BACnetArray[N] of BACnetTimeStamp	-	O	-
Profile_Name	CharacterString	-	O	-

© HMS Industrial Networks S.L.U - All rights reserved
This information is subject to change without notice

© HMS Industrial Networks S.L.U - All rights reserved
This information is subject to change without notice

5.3.16 ErrorActive (Binary Input Object Type)

It indicates if there is an active error in the indoor unit.

Property Identifier	Property Datatype	Value	ASHRAE	IBOX
Object_Identifier	BACnetObjectIdentifier	(Binary Input, 1)	R	R
Object_Name	CharacterString	“ErrorActive”	R	R
Object_Type	BACnetObjectType	BINARY_INPUT (3)	R	R
Present_Value	BACnetBinaryPV	INACTIVE (0) / ACTIVE (1)	R	R
Description	CharacterString	-	O	-
Device_Type	CharacterString	-	O	-
Status_Flags	BACnetStatusFlags	{FALSE, FALSE, FALSE, FALSE}	R	R
Event_State	BACnetEventState	STATE_NORMAL (0)	R	R
Reliability	BACnetReliability	NO_FAULT_DETECTED (0)	O	R
Out_Of_Service	BOOLEAN	FALSE	R	R
Polarity	BACnetPolarity	NORMAL (0)	R	R
Inactive_Text	CharacterString	"No"	O	R
Active_Text	CharacterString	“Error”	O	R
Change_Of_State_Time	BACnetDatetime	-	O	-
Change_Of_State_Count	Unsigned	-	O	-
Time_Of_State_Count_Reset	BACnetDatetime	-	O	-
Elapsed_Active_Time	Unsigned	-	O	-
Time_Of_Active_Time_Reset	BACnetDatetime	-	O	-
Time_Delay	Unsigned	-	O	-
Notification_Class	Unsigned	-	O	-
Alarm_Value	BACnetBinaryPV	-	O	-
Event_Enable	BACnetEventTransitionBits	-	O	-
Acked_Transitions	BACnetEventTransitionBits	-	O	-
Notify_Type	BACnetNotifyType	-	O	-
Event_Time_Stamps	BACnetArray[N] of BACnetTimeStamp	-	O	-
Profile_Name	CharacterString	-	O	-

© HMS Industrial Networks S.L.U - All rights reserved
This information is subject to change without notice

5.3.17 ErrorAddress (Analog Input Object Type)

It indicates the indoor unit address where the error is active.

Property Identifier	Property Datatype	Value	ASHRAE	IBOX
Object_Identifier	BACnetObjectIdentifier	(Analog Input, 4)	R	R
Object_Name	CharacterString	“ErrorAddress”	R	R
Object_Type	BACnetObjectType	ANALOG_INPUT (0)	R	R
Present_Value	REAL		R	R
Description	CharacterString	-	O	-
Device_Type	CharacterString	-	O	-
Status_Flags	BACnetStatusFlags	{FALSE, FALSE/TRUE, FALSE, FALSE}	R	R
Event_State	BACnetEventState	STATE_NORMAL (0)	R	R
Reliability	BACnetReliability	NO_FAULT_DETECTED (0), UNRELIABLE_OTHER (7)	O	R
Out_Of_Service	BOOLEAN	FALSE/TRUE	R	R
Update_Interval	Unsigned	-	O	-
Units	BACnetEngineeringUnits	-	R	R
Min_Pres_Value	REAL	-	O	-
Max_Pres_Value	REAL	-	O	-
Resolution	REAL	-	O	-
COV_Increment	REAL	0	O	W
Time_Delay	Unsigned	-	O	-
Notification_Class	Unsigned	-	O	-
High_Limit	REAL	-	O	-
Low_Limit	REAL	-	O	-
Deadband	REAL	-	O	-
Limit_Enable	BACnetLimitEnable	-	O	-
Event_Enable	BACnetEventTransitionBits	-	O	-
Acked_Transitions	BACnetEventTransitionBits	-	O	-
Notify_Type	BACnetNotifyType	-	O	-
Event_Time_Stamps	BACnetArray[N] of BACnetTimeStamp	-	O	-
Profile_Name	CharacterString	-	O	-

© HMS Industrial Networks S.L.U - All rights reserved
This information is subject to change without notice

5.3.18 ErrorReset (Binary Output Object Type)

It resets the error signal.

Property Identifier	Property Datatype	Value	ASHRAE	IBOX
Object_Identifier	BACnetObjectIdentifier	(Binary Output, 5)	R	R
Object_Name	CharacterString	“ErrorReset”	R	R
Object_Type	BACnetObjectType	BINARY_OUTPUT (4)	R	R
Present_Value	BACnetBinaryPV	INACTIVE (0) / ACTIVE (1)	W	W
Description	CharacterString	-	O	-
Device_Type	CharacterString	-	O	-
Status_Flags	BACnetStatusFlags	{FALSE, FALSE, FALSE, FALSE}	R	R
Event_State	BACnetEventState	STATE_NORMAL (0)	R	R
Reliability	BACnetReliability	NO_FAULT_DETECTED (0)	O	R
Out_Of_Service	BOOLEAN	FALSE	R	R
Polarity	BACnetPolarity	NORMAL (0)	R	R
Inactive_Text	CharacterString	"Normal"	O	R
Active_Text	CharacterString	“Reset"	O	R
Change_Of_State_Time	BACnetDatetime	-	O	-
Change_Of_State_Count	Unsigned	-	O	-
Time_Of_State_Count_Reset	BACnetDatetime	-	O	-
Elapsed_Active_Time	Unsigned	-	O	-
Time_Of_Active_Time_Reset	BACnetDatetime	-	O	-
Minimum_Off_Time	Unsigned32	-	O	-
Minimum_On_Time	Unsigned32	-	O	-
Priority_Array	BACnetPriorityArray	BACnetPriorityArray	R	R
Relinquish_Default	BACnetBinaryPV	INACTIVE (0)	R	R
Time_Delay	Unsigned	-	O	-
Notification_Class	Unsigned	-	O	-
Feedback_Value	BACnetBinaryPV	-	O	-
Event_Enable	BACnetEventTransitionBits	-	O	-
Acked_Transitions	BACnetEventTransitionBits	-	O	-
Notify_Type	BACnetNotifyType	-	O	-
Event_Time_Stamps	BACnetArray[N] of BACnetTimeStamp	-	O	-
Profile_Name	CharacterString	-	O	-

© HMS Industrial Networks S.L.U - All rights reserved
This information is subject to change without notice

5.3.19 OnTimeCounter (Analog Value Object Type)

It indicates the amount of time the units have been running.

Property Identifier	Property Datatype	Value	ASHRAE	IBOX
Object_Identifier	BACnetObjectIdentifier	(Analog Value, 0)	R	R
Object_Name	CharacterString	“OnTimeCounter”	R	R
Object_Type	BACnetObjectType	ANALOG_VALUE (2)	R	R
Present_Value	REAL	0 .. 65535	R	R
Description	CharacterString	-	O	-
Status_Flags	BACnetStatusFlags	{FALSE, FALSE, FALSE, FALSE}	R	R
Event_State	BACnetEventState	STATE_NORMAL (0)	R	R
Reliability	BACnetReliability	NO_FAULT_DETECTED (0)	O	R
Out_Of_Service	BOOLEAN	FALSE	R	R
Update_Interval	Unsigned	-	O	-
Units	BACnetEngineeringUnits	Hours (71)	R	R
Min_Pres_Value	REAL	-	O	-
Max_Pres_Value	REAL	-	O	-
Resolution	REAL	-	O	-
COV_Increment	REAL	0	O	W
Time_Delay	Unsigned	-	O	-
Notification_Class	Unsigned	-	O	-
High_Limit	REAL	-	O	-
Low_Limit	REAL	-	O	-
Deadband	REAL	-	O	-
Limit_Enable	BACnetLimitEnable	-	O	-
Event_Enable	BACnetEventTransitionBits	-	O	-
Acked_Transitions	BACnetEventTransitionBits	-	O	-
Notify_Type	BACnetNotifyType	-	O	-
Event_Time_Stamps	BACnetArray[N] of BACnetTimeStamp	-	O	-
Profile_Name	CharacterString	-	O	-

© HMS Industrial Networks S.L.U - All rights reserved
This information is subject to change without notice

5.3.20 Occupancy (Multistate Value Object Type)

It indicates the use or not of the occupancy function. Check section 7.4 for more information.

Property Identifier	Property Datatype	Value	ASHRAE	IBOX
Object_Identifier	BACnetObjectIdentifier	(Multi-state Output, 0)	R	R
Object_Name	CharacterString	“Occupancy”	R	R
Object_Type	BACnetObjectType	MULTISTATE_VALUE (19)	R	R
Present_Value	Unsigned	1 ~ 3	W	W
Description	CharacterString	-	O	-
Status_Flags	BACnetStatusFlags	{FALSE, FALSE, FALSE, FALSE}	R	R
Event_State	BACnetEventState	STATE_NORMAL (0)	R	R
Reliability	BACnetReliability	NO_FAULT_DETECTED (0)	O	R
Out_Of_Service	BOOLEAN	FALSE	R	R
Number_Of_States	Unsigned	3	R	R
State_Text	BACnetArray[N] of CharacterString	*Check **Occupancy setting table** below*	O	R
Priority_Array	BACnetPriorityArray	-	R	-
Relinquish_Default	Unsigned	-	R	-
Time_Delay	Unsigned	-	O	-
Notification_Class	Unsigned	-	O	-
Alarm_Value	Unsigned	-	O	-
Fault_Value	Unsigned		O	-
Event_Enable	BACnetEventTransitionBits	-	O	-
Acked_Transitions	BACnetEventTransitionBits	-	O	-
Notify_Type	BACnetNotifyType	-	O	-
Event_Time_Stamps	BACnetArray[N] of BACnetTimeStamp	-	O	-
Profile_Name	CharacterString	-	O	-

Occupancy values table

Check possible Occupancy values in the following correspondence table.

Pesent_Value	Contents displayed in State_Text
1	Occupied
2	Unoccupied
3	Disabled (default)

© HMS Industrial Networks S.L.U - All rights reserved
This information is subject to change without notice

5.3.21 OccupiedCoolSetPoint (Analog Value Object Type)

It indicates the current Setpoint when Cool mode is selected, and Occupancy is enabled and the room is occupied. Check section 7.4 Occupancy for more information.

Property Identifier	Property Datatype	Value	ASHRAE	IBOX
Object_Identifier	BACnetObjectIdentifier	(Analog Value, 1)	R	R
Object_Name	CharacterString	“OccupiedCoolSetPoint”	R	R
Object_Type	BACnetObjectType	ANALOG_VALUE (2)	R	R
Present_Value	REAL	16…32 ºC 60…90 ºF	R	R
Description	CharacterString	-	O	-
Status_Flags	BACnetStatusFlags	{FALSE, FALSE, FALSE, FALSE}	R	R
Event_State	BACnetEventState	STATE_NORMAL (0)	R	R
Reliability	BACnetReliability	NO_FAULT_DETECTED (0)	O	R
Out_Of_Service	BOOLEAN	FALSE	R	R
Update_Interval	Unsigned	-	O	-
Units **	BACnetEngineeringUnits	Degrees Celsius (62) Degrees Fahrenheit (64)	R	R
Min_Pres_Value	REAL	-	O	-
Max_Pres_Value	REAL	-	O	-
Resolution	REAL	-	O	-
COV_Increment	REAL	0	O	W
Time_Delay	Unsigned	-	O	-
Notification_Class	Unsigned	-	O	-
High_Limit	REAL	-	O	-
Low_Limit	REAL	-	O	-
Deadband	REAL	-	O	-
Limit_Enable	BACnetLimitEnable	-	O	-
Event_Enable	BACnetEventTransitionBits	-	O	-
Acked_Transitions	BACnetEventTransitionBits	-	O	-
Notify_Type	BACnetNotifyType	-	O	-
Event_Time_Stamps	BACnetArray[N] of BACnetTimeStamp	-	O	-
Profile_Name	CharacterString	-	O	-

** Use of Celsius or Fahrenheits units can be selected throught the switch configuration. Check section 6.1 for more information.

© HMS Industrial Networks S.L.U - All rights reserved
This information is subject to change without notice

5.3.22 OccupiedHeatSetPoint (Analog Value Object Type)

It indicates the current Setpoint when Heat mode is selected, and Occupancy is enabled and the room is occupied. Check section 7.4 Occupancy for more information.

Property Identifier	Property Datatype	Value	ASHRAE	IBOX
Object_Identifier	BACnetObjectIdentifier	(Analog Value, 2)	R	R
Object_Name	CharacterString	“OccupiedHeatSetPoint”	R	R
Object_Type	BACnetObjectType	ANALOG_VALUE (2)	R	R
Present_Value	REAL	16…32 ºC 60…90 ºF	R	R
Description	CharacterString	-	O	-
Status_Flags	BACnetStatusFlags	{FALSE, FALSE, FALSE, FALSE}	R	R
Event_State	BACnetEventState	STATE_NORMAL (0)	R	R
Reliability	BACnetReliability	NO_FAULT_DETECTED (0)	O	R
Out_Of_Service	BOOLEAN	FALSE	R	R
Update_Interval	Unsigned	-	O	-
Units **	BACnetEngineeringUnits	Degrees Celsius (62) Degrees Fahrenheit (64)	R	R
Min_Pres_Value	REAL	-	O	-
Max_Pres_Value	REAL	-	O	-
Resolution	REAL	-	O	-
COV_Increment	REAL	0	O	W
Time_Delay	Unsigned	-	O	-
Notification_Class	Unsigned	-	O	-
High_Limit	REAL	-	O	-
Low_Limit	REAL	-	O	-
Deadband	REAL	-	O	-
Limit_Enable	BACnetLimitEnable	-	O	-
Event_Enable	BACnetEventTransitionBits	-	O	-
Acked_Transitions	BACnetEventTransitionBits	-	O	-
Notify_Type	BACnetNotifyType	-	O	-
Event_Time_Stamps	BACnetArray[N] of BACnetTimeStamp	-	O	-
Profile_Name	CharacterString	-	O	-

** Use of Celsius or Fahrenheits units can be selected throught the switch configuration. Check section 6.1 for more information.

5.3.23 UnoccupiedCoolSetPoint (Analog Value Object Type)

© HMS Industrial Networks S.L.U - All rights reserved
This information is subject to change without notice

It indicates the current Setpoint when Cool mode is selected, and Occupancy is enabled and the room is unoccupied. Check section 7.4 Occupancy for more information.

Property Identifier	Property Datatype	Value	ASHRAE	IBOX
Object_Identifier	BACnetObjectIdentifier	(Analog Value, 3)	R	R
Object_Name	CharacterString	“UnoccupiedCoolSetPoint”	R	R
Object_Type	BACnetObjectType	ANALOG_VALUE (2)	R	R
Present_Value	REAL	16…32 ºC 60…90 ºF	R	R
Description	CharacterString	-	O	-
Status_Flags	BACnetStatusFlags	{FALSE, FALSE, FALSE, FALSE}	R	R
Event_State	BACnetEventState	STATE_NORMAL (0)	R	R
Reliability	BACnetReliability	NO_FAULT_DETECTED (0)	O	R
Out_Of_Service	BOOLEAN	FALSE	R	R
Update_Interval	Unsigned	-	O	-
Units **	BACnetEngineeringUnits	Degrees Celsius (62) Degrees Fahrenheit (64)	R	R
Min_Pres_Value	REAL	-	O	-
Max_Pres_Value	REAL	-	O	-
Resolution	REAL	-	O	-
COV_Increment	REAL	0	O	W
Time_Delay	Unsigned	-	O	-
Notification_Class	Unsigned	-	O	-
High_Limit	REAL	-	O	-
Low_Limit	REAL	-	O	-
Deadband	REAL	-	O	-
Limit_Enable	BACnetLimitEnable	-	O	-
Event_Enable	BACnetEventTransitionBits	-	O	-
Acked_Transitions	BACnetEventTransitionBits	-	O	-
Notify_Type	BACnetNotifyType	-	O	-
Event_Time_Stamps	BACnetArray[N] of BACnetTimeStamp	-	O	-
Profile_Name	CharacterString	-	O	-

** Use of Celsius or Fahrenheits units can be selected throught the switch configuration. Check section 6.1 for more information.

© HMS Industrial Networks S.L.U - All rights reserved
This information is subject to change without notice

5.3.24 UnoccupiedHeatSetPoint (Analog Value Object Type)

It indicates the current Setpoint when Heat mode is selected, and Occupancy is enabled and the room is unoccupied. Check section 7.4 Occupancy for more information.

Property Identifier	Property Datatype	Value	ASHRAE	IBOX
Object_Identifier	BACnetObjectIdentifier	(Analog Value, 4)	R	R
Object_Name	CharacterString	“UnoccupiedHeatSetPoint”	R	R
Object_Type	BACnetObjectType	ANALOG_VALUE (2)	R	R
Present_Value	REAL	16…32 ºC 60…90 ºF	R	R
Description	CharacterString	-	O	-
Status_Flags	BACnetStatusFlags	{FALSE, FALSE, FALSE, FALSE}	R	R
Event_State	BACnetEventState	STATE_NORMAL (0)	R	R
Reliability	BACnetReliability	NO_FAULT_DETECTED (0)	O	R
Out_Of_Service	BOOLEAN	FALSE	R	R
Update_Interval	Unsigned	-	O	-
Units **	BACnetEngineeringUnits	Degrees Celsius (62) Degrees Fahrenheit (64)	R	R
Min_Pres_Value	REAL	-	O	-
Max_Pres_Value	REAL	-	O	-
Resolution	REAL	-	O	-
COV_Increment	REAL	0	O	W
Time_Delay	Unsigned	-	O	-
Notification_Class	Unsigned	-	O	-
High_Limit	REAL	-	O	-
Low_Limit	REAL	-	O	-
Deadband	REAL	-	O	-
Limit_Enable	BACnetLimitEnable	-	O	-
Event_Enable	BACnetEventTransitionBits	-	O	-
Acked_Transitions	BACnetEventTransitionBits	-	O	-
Notify_Type	BACnetNotifyType	-	O	-
Event_Time_Stamps	BACnetArray[N] of BACnetTimeStamp	-	O	-
Profile_Name	CharacterString	-	O	-

** Use of Celsius or Fahrenheits units can be selected throught the switch configuration. Check section 6.1 for more information.

© HMS Industrial Networks S.L.U - All rights reserved
This information is subject to change without notice

5.3.25 OccupancyContinuousCheck (Binary Value Object Type)

It indicates if the system is continuously checking the setpoint and occupancy conditions. Check section 7.4 Occupancy for more information.

Property Identifier	Property Datatype	Value	ASHRAE	IBOX
Object_Identifier	BACnetObjectIdentifier	(Binary Value, 0)	R	R
Object_Name	CharacterString	“OccupancyContinuousCheck”	R	R
Object_Type	BACnetObjectType	BINARY_VALUE (5)	R	R
Present_Value	BACnetBinaryPV	INACTIVE (0) / ACTIVE (1)	W	W
Description	CharacterString	-	O	-
Status_Flags	BACnetStatusFlags	{FALSE, FALSE, FALSE, FALSE}	R	R
Event_State	BACnetEventState	STATE_NORMAL (0)	R	R
Reliability	BACnetReliability	NO_FAULT_DETECTED (0)	O	R
Out_Of_Service	BOOLEAN	FALSE	R	R
Inactive_Text	CharacterString	"Disabled"	O	R
Active_Text	CharacterString	“Enabled"	O	R
Change_Of_State_Time	BACnetDatetime	-	O	-
Change_Of_State_Count	Unsigned	-	O	-
Time_Of_State_Count_Reset	BACnetDatetime	-	O	-
Elapsed_Active_Time	Unsigned	-	O	-
Time_Of_Active_Time_Reset	BACnetDatetime	-	O	-
Minimum_Off_Time	Unsigned32	-	O	-
Minimum_On_Time	Unsigned32	-	O	-
Priority_Array	BACnetPriorityArray	BACnetPriorityArray	R	-
Relinquish_Default	BACnetBinaryPV	INACTIVE (0)	R	-
Time_Delay	Unsigned	-	O	-
Notification_Class	Unsigned	-	O	-
Alarm_Value	BACnetBinaryPV	-	O	-
Event_Enable	BACnetEventTransitionBits	-	O	-
Acked_Transitions	BACnetEventTransitionBits	-	O	-
Notify_Type	BACnetNotifyType	-	O	-
Event_Time_Stamps	BACnetArray[N] of BACnetTimeStamp	-	O	-
Profile_Name	CharacterString	-	O	-

© HMS Industrial Networks S.L.U - All rights reserved
This information is subject to change without notice

5.3.26 UnoccupiedDeadbandAction (Binary Value Object Type)

It indicates the action to be performed by the system when Unoccupancy is enabled and Room Temperature is within the deadband. Check section 7.4 Occupancy for more information.

Property Identifier	Property Datatype	Value	ASHRAE	IBOX
Object_Identifier	BACnetObjectIdentifier	(Binary Value, 1)	R	R
Object_Name	CharacterString	“UnoccupiedDeadbandAction”	R	R
Object_Type	BACnetObjectType	BINARY_VALUE (5)	R	R
Present_Value	BACnetBinaryPV	INACTIVE (0) / ACTIVE (1)	W	W
Description	CharacterString	-	O	-
Status_Flags	BACnetStatusFlags	{FALSE, FALSE, FALSE, FALSE}	R	R
Event_State	BACnetEventState	STATE_NORMAL (0)	R	R
Reliability	BACnetReliability	NO_FAULT_DETECTED (0)	O	R
Out_Of_Service	BOOLEAN	FALSE	R	R
Inactive_Text	CharacterString	"Off"	O	R
Active_Text	CharacterString	“CurrentMode"	O	R
Change_Of_State_Time	BACnetDatetime	-	O	-
Change_Of_State_Count	Unsigned	-	O	-
Time_Of_State_Count_Reset	BACnetDatetime	-	O	-
Elapsed_Active_Time	Unsigned	-	O	-
Time_Of_Active_Time_Reset	BACnetDatetime	-	O	-
Minimum_Off_Time	Unsigned32	-	O	-
Minimum_On_Time	Unsigned32	-	O	-
Priority_Array	BACnetPriorityArray	BACnetPriorityArray	R	-
Relinquish_Default	BACnetBinaryPV	INACTIVE (0)	R	-
Time_Delay	Unsigned	-	O	-
Notification_Class	Unsigned	-	O	-
Alarm_Value	BACnetBinaryPV	-	O	-
Event_Enable	BACnetEventTransitionBits	-	O	-
Acked_Transitions	BACnetEventTransitionBits	-	O	-
Notify_Type	BACnetNotifyType	-	O	-
Event_Time_Stamps	BACnetArray[N] of BACnetTimeStamp	-	O	-
Profile_Name	CharacterString	-	O	-

© HMS Industrial Networks S.L.U - All rights reserved
This information is subject to change without notice

5.3.27 LockRemoteControl (Binary Value Object Type)

It is used to lock or unlock the Hitachi wired Remote Controller.

Property Identifier	Property Datatype	Value	ASHRAE	IBOX
Object_Identifier	BACnetObjectIdentifier	(Binary Value, 2)	R	R
Object_Name	CharacterString	“LockRemoteControl”	R	R
Object_Type	BACnetObjectType	BINARY_VALUE (5)	R	R
Present_Value	BACnetBinaryPV	INACTIVE (0) / ACTIVE (1)	W	W
Description	CharacterString	-	O	-
Status_Flags	BACnetStatusFlags	{FALSE, FALSE, FALSE, FALSE}	R	R
Event_State	BACnetEventState	STATE_NORMAL (0)	R	R
Reliability	BACnetReliability	NO_FAULT_DETECTED (0)	O	R
Out_Of_Service	BOOLEAN	FALSE	R	R
Inactive_Text	CharacterString	"Unlocked"	O	R
Active_Text	CharacterString	“Locked"	O	R
Change_Of_State_Time	BACnetDatetime	-	O	-
Change_Of_State_Count	Unsigned	-	O	-
Time_Of_State_Count_Reset	BACnetDatetime	-	O	-
Elapsed_Active_Time	Unsigned	-	O	-
Time_Of_Active_Time_Reset	BACnetDatetime	-	O	-
Minimum_Off_Time	Unsigned32	-	O	-
Minimum_On_Time	Unsigned32	-	O	-
Priority_Array	BACnetPriorityArray	BACnetPriorityArray	R	-
Relinquish_Default	BACnetBinaryPV	INACTIVE (0)	R	-
Time_Delay	Unsigned	-	O	-
Notification_Class	Unsigned	-	O	-
Alarm_Value	BACnetBinaryPV	-	O	-
Event_Enable	BACnetEventTransitionBits	-	O	-
Acked_Transitions	BACnetEventTransitionBits	-	O	-
Notify_Type	BACnetNotifyType	-	O	-
Event_Time_Stamps	BACnetArray[N] of BACnetTimeStamp	-	O	-
Profile_Name	CharacterString	-	O	-

© HMS Industrial Networks S.L.U - All rights reserved
This information is subject to change without notice

5.3.28 SerialNumber (Analog Input Object Type)

It indicates the serial number of the device. Serial number follows the next rule 000KXXXXX, where:

- 000K is constant and not included in Present Value property.
- XXXXX is the unique serial number of the device. It is the information provided through the Present Value.

Property Identifier	Property Datatype	Value	ASHRAE	IBOX
Object_Identifier	BACnetObjectIdentifier	(Analog Input, 11)	R	R
Object_Name	CharacterString	“SerialNumber”	R	R
Object_Type	BACnetObjectType	ANALOG_INPUT (0)	R	R
Present_Value *	REAL	-	R	R
Description	CharacterString	-	O	-
Device_Type	CharacterString	-	O	-
Status_Flags	BACnetStatusFlags	{FALSE, FALSE/TRUE, FALSE, FALSE}	R	R
Event_State	BACnetEventState	STATE_NORMAL (0)	R	R
Reliability	BACnetReliability	NO_FAULT_DETECTED (0), UNRELIABLE_OTHER (7)	O	R
Out_Of_Service	BOOLEAN	FALSE	R	R
Update_Interval	Unsigned	-	O	-
Units *	BACnetEngineeringUnits	-	R	R
Min_Pres_Value *	REAL	-	O	R
Max_Pres_Value *	REAL	-	O	R
Resolution	REAL	-	O	-
COV_Increment	REAL	0	O	W
Time_Delay	Unsigned	-	O	-
Notification_Class	Unsigned	-	O	-
High_Limit	REAL	-	O	-
Low_Limit	REAL	-	O	-
Deadband	REAL	-	O	-
Limit_Enable	BACnetLimitEnable	-	O	-
Event_Enable	BACnetEventTransitionBits	-	O	-
Acked_Transitions	BACnetEventTransitionBits	-	O	-
Notify_Type	BACnetNotifyType	-	O	-
Event_Time_Stamps	BACnetArray[N] of BACnetTimeStamp	-	O	-
Profile_Name	CharacterString	-	O	-

© HMS Industrial Networks S.L.U - All rights reserved
This information is subject to change without notice

5.3.29 UserSetPoint_status (Analog Input Object Type)

It indicates the current user setpoint temperature set from BACnet when the virtual temperature is active.

Property Identifier	Property Datatype	Value	ASHRAE	IBOX
Object_Identifier	BACnetObjectIdentifier	(Analog Input, 17)	R	R
Object_Name	CharacterString	“UserSetPoint_status”	R	R
Object_Type	BACnetObjectType	ANALOG_INPUT (0)	R	R
Present_Value	REAL	16…32 ºC 60…90 ºF	R	R
Description	CharacterString	-	O	-
Device_Type	CharacterString	-	O	-
Status_Flags	BACnetStatusFlags	{FALSE, FALSE/TRUE, FALSE, FALSE}	R	R
Event_State	BACnetEventState	STATE_NORMAL (0)	R	R
Reliability	BACnetReliability	NO_FAULT_DETECTED (0), UNRELIABLE_OTHER (7)	O	R
Out_Of_Service	BOOLEAN	FALSE	R	R
Update_Interval	Unsigned	-	O	-
Units **	BACnetEngineeringUnits	Degrees Celsius (62), Degrees Fahrenheit (64)	R	R
Min_Pres_Value	REAL	16 ºC // 60 ºF	O	R
Max_Pres_Value	REAL	32 ºC // 90 ºF	O	R
Resolution	REAL	-	O	-
COV_Increment	REAL	0	O	W
Time_Delay	Unsigned	-	O	-
Notification_Class	Unsigned	-	O	-
High_Limit	REAL	-	O	-
Low_Limit	REAL	-	O	-
Deadband	REAL	-	O	-
Limit_Enable	BACnetLimitEnable	-	O	-
Event_Enable	BACnetEventTransitionBits	-	O	-
Acked_Transitions	BACnetEventTransitionBits	-	O	-
Notify_Type	BACnetNotifyType	-	O	-
Event_Time_Stamps	BACnetArray[N] of BACnetTimeStamp	-	O	-
Profile_Name	CharacterString	-	O	-

** Use of Celsius or Fahrenheits units can be selected throught the switch configuration. Check section 6.1 for more information.

© HMS Industrial Networks S.L.U - All rights reserved
This information is subject to change without notice

5.3.30 VirtualTempActive (Binary Input Object Type)

It indicates if the virtual temperature active is active or not.

Property Identifier	Property Datatype	Value	ASHRAE	IBOX
Object_Identifier	BACnetObjectIdentifier	(Binary Input, 14)	R	R
Object_Name	CharacterString	“VirtualTempActive”	R	R
Object_Type	BACnetObjectType	BINARY_INPUT (3)	R	R
Present_Value	BACnetBinaryPV	INACTIVE (0) / ACTIVE (1)	R	R
Description	CharacterString	-	O	-
Device_Type	CharacterString	-	O	-
Status_Flags	BACnetStatusFlags	{FALSE, FALSE/TRUE, FALSE, FALSE}	R	R
Event_State	BACnetEventState	STATE_NORMAL (0)	R	R
Reliability	BACnetReliability	NO_FAULT_DETECTED (0), UNRELIABLE_OTHER (7)	O	R
Out_Of_Service	BOOLEAN	FALSE	R	R
Polarity	BACnetPolarity	NORMAL (0)	R	R
Inactive_Text	CharacterString	"No"	O	R
Active_Text	CharacterString	“Yes”	O	R
Change_Of_State_Time	BACnetDatetime	-	O	-
Change_Of_State_Count	Unsigned	-	O	-
Time_Of_State_Count_Reset	BACnetDatetime	-	O	-
Elapsed_Active_Time	Unsigned	-	O	-
Time_Of_Active_Time_Reset	BACnetDatetime	-	O	-
Time_Delay	Unsigned	-	O	-
Notification_Class	Unsigned	-	O	-
Alarm_Value	BACnetBinaryPV	-	O	-
Event_Enable	BACnetEventTransitionBits	-	O	-
Acked_Transitions	BACnetEventTransitionBits	-	O	-
Notify_Type	BACnetNotifyType	-	O	-
Event_Time_Stamps	BACnetArray[N] of BACnetTimeStamp	-	O	-
Profile_Name	CharacterString	-	O	-

© HMS Industrial Networks S.L.U - All rights reserved
This information is subject to change without notice

5.3.31 FilterSignAddress (Analog Input Object Type)

It indicates the AC indoor unit address which reports the filter signal.

Property Identifier	Property Datatype	Value	ASHRAE	IBOX
Object_Identifier	BACnetObjectIdentifier	(Analog Input, 18)	R	R
Object_Name	CharacterString	“FilterSignAddress”	R	R
Object_Type	BACnetObjectType	ANALOG_INPUT (0)	R	R
Present_Value	REAL	-	R	R
Description	CharacterString	-	O	-
Device_Type	CharacterString	-	O	-
Status_Flags	BACnetStatusFlags	{FALSE, FALSE/TRUE, FALSE, FALSE}	R	R
Event_State	BACnetEventState	STATE_NORMAL (0)	R	R
Reliability	BACnetReliability	NO_FAULT_DETECTED (0), UNRELIABLE_OTHER (7)	O	R
Out_Of_Service	BOOLEAN	FALSE	R	R
Update_Interval	Unsigned	-	O	-
Units **	BACnetEngineeringUnits	-	R	R
Min_Pres_Value	REAL	-	O	R
Max_Pres_Value	REAL	-	O	R
Resolution	REAL	-	O	-
COV_Increment	REAL	0	O	W
Time_Delay	Unsigned	-	O	-
Notification_Class	Unsigned	-	O	-
High_Limit	REAL	-	O	-
Low_Limit	REAL	-	O	-
Deadband	REAL	-	O	-
Limit_Enable	BACnetLimitEnable	-	O	-
Event_Enable	BACnetEventTransitionBits	-	O	-
Acked_Transitions	BACnetEventTransitionBits	-	O	-
Notify_Type	BACnetNotifyType	-	O	-
Event_Time_Stamps	BACnetArray[N] of BACnetTimeStamp	-	O	-
Profile_Name	CharacterString	-	O	-

© HMS Industrial Networks S.L.U - All rights reserved
This information is subject to change without notice

6 Connections and switches

6.1 *Connect to the Remote Controller bus*

Disconnect the Hitachi system from Mains Power

Connect the interface to terminals A, B at any point in the bus. The Remote Controller bus connects the AC indoor unit to the wired remote controller, it is a two-wire bus connecting terminals A and B. This RC bus has no specific polarity. Use RC2 bus port on the gateway's end.
Note that a Remote Controller is optional. If present, the AC unit will be controlled by both the gateway and the RC simultaneously.

Max. length for RC bus is 500 m (1,640 ft)

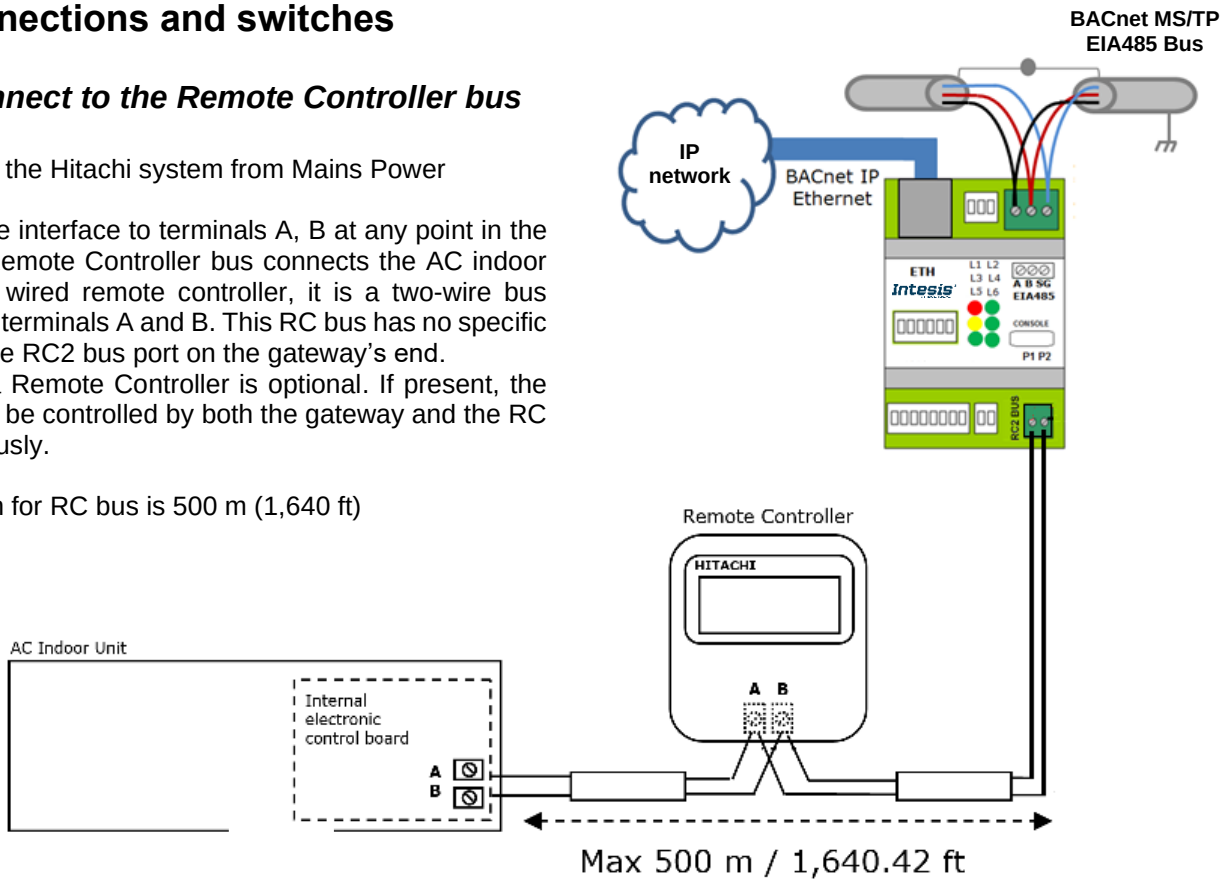

Wiring diagram

6.2 *DIP switches*

The INBACHIT001R000 includes the following DIP-Switches blocks (see figure below)

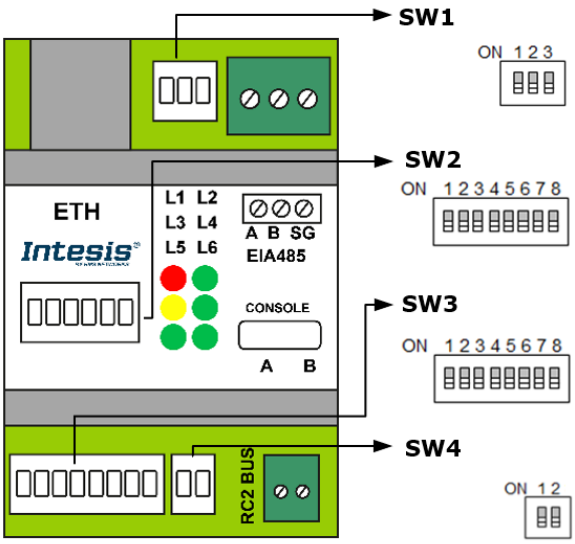

SW1 - polarity and termination resitor settings

SW2 - BACnet MS/TP MAC address

SW3 - BACnet settings

SW4 - AC unit settings

See DIP switches config details below

© HMS Industrial Networks S.L.U - All rights reserved
This information is subject to change without notice

SW1 – Polarization and termination resistor settings

SW1 – 1..3 1 2 3	Description
↓ x x	EIA-485 bus without a termination resistor (default value)
↑ x x	Internal 120 Ω termination resistor connected to EIA-485 bus
x ↓ ↓	No BUS polarization (default value).
x ↑ ↑	BUS polarization active.

SW2 – BACnet MS/TP MAC address

SW2 – 1..7 1 2 3 4 5 6 7 8	MAC address
↓ ↓ ↓ ↓ ↓ ↓ ↓ x	0 (default value)
↑ ↓ ↓ ↓ ↓ ↓ ↓ x	1
↓ ↑ ↓ ↓ ↓ ↓ ↓ x	2
↑ ↑ ↓ ↓ ↓ ↓ ↓ x	3
↓ ↓ ↑ ↓ ↓ ↓ ↓ x	4
[…]	[…]
↑ ↓ ↑ ↑ ↑ ↑ ↑ x	125
↓ ↑ ↑ ↑ ↑ ↑ ↑ x	126
↑ ↑ ↑ ↑ ↑ ↑ ↑ x	127

SW3 – BACnet settings

SW3 – 1..5 1 2 3 4 5 6 7 8	Description
↓ x x x x x x x	BACnet MS/TP active (default value)
↑ x x x x x x x	BACnet IP active
x ↓ ↓ ↓ x x x x	Autobaudrate (default value)
x ↑ ↓ ↓ x x x x	9600 bps
x ↓ ↑ ↓ x x x x	19200 bps
x ↑ ↑ ↓ x x x x	38400 bps
x ↓ ↓ ↑ x x x x	57600 bps
x ↑ ↓ ↑ x x x x	76800 bps
x ↓ ↑ ↑ x x x x	115200 bps
x ↑ ↑ ↑ x x x x	Not used - Reserved
x x x x ↓ x x x	Celsius degrees (default value)
x x x x ↑ x x x	Farenheit degrees

SW4 – Remote Controller bus settings

SW4 1 2	Description
↓ x	Device is slave in AB bus (default value)
↑ x	Device is master in AB bus
x ↓	Not used (default value).
x ↑	Not used.

⚠ ***Important***: Switch changes take effect after a device power cycle

© HMS Industrial Networks S.L.U - All rights reserved
This information is subject to change without notice

6.3 *Connect to BACnet MS/TP*

Connect the EIA485 bus wires to the INBACHIT001R000 plug-in terminal block (EIA485); observe polarity on this connection (A+ and B-). For BACnet MS/TP bus, use three-conductor shielded cable. Connect the metallic shields for all cables connected to the gateway EIA-485 port. Connect shield to ground only on one end

Connect the ground signal to the plug-in terminal block (SG).

Observe the maximum distance of 1,200 meters for the bus, no loop or star topologies are allowed for EIA485 bus.

EIA-485 bus. Termination resistors and Fail-Safe Biasing mechanism

EIA-485 bus requires a 120Ω terminator resistor at each end of the bus to avoid signal reflections.

In order to prevent fail status detections by the receivers, which are *"listening"* to the bus, when all the transmitters' outputs are in three-state (high impedance), a fail-safe biasing mechanism is required. This mechanism provides a safe status (a correct voltage level) in the bus when all the transmitters' outputs are in three-state.

The INBACHIT001R000 gateway includes an on-board terminator resistor of 120Ω that can be connected to the EIA-485 bus by using DIP-switch **SW1**.

Some BACnet MS/TP EIA-485 Master devices can provide also internal 120Ω terminator resistor and/or fail-safe biasing. Check the technical documentation of the Master device connected to the EIA-485 network in each case.

Please, check configuration as well on **SW2** and **SW3** before connecting to BACnet MS/TP.

6.3.1 MS/TP MAC address switch configuration

MAC address can be configured using DIP-switch block **SW2**. The MAC address may affect on the Device Instance. If the "Auto Device Instance" is used, keep in mind that the Device Instance will be built using the "Device Instance Base" + the address configured in SW2, bits 1 to 7. Please, check section 7.5 Configuraiton Tool for more information.

6.3.2 MS/TP activation and baudrate

Select the right baudrate for BACnet MS/TP communication using DIP-switch block **SW3**.

6.4 *Connect to BACnet IP*

Connect the RJ45 connector to the Ethernet connection (ETH) of INBACHIT001R000. Observe same recommendations as per any other Ethernet communication network.

Remember to activate the IP interface through DIP-switch block **SW3**.

By default, the INBACHIT001R000 comes with a **static IP address**: **192.168.100.246**. To change it, please use the configuration tool and select either DHCP or another static IP (recommended) that suits your integration project requirements. Check section 7.5 Configuration Tool for more information.

6.4.1 BACnet Device Instance

If the "Auto Device Instance" option is used, the Device Instance will be build using the "Device Instance Base" + the address selected in DIP-swith block **SW2**, bits 1 to 7.

⚠ ***Important***: Switch changes take effect after a device power cycle

© HMS Industrial Networks S.L.U - All rights reserved
This information is subject to change without notice

7 Set-up process and troubleshooting

7.1 *Pre-requisites*

In a BACnet MS/TP integration, it is necessary to have the BACnet MS/TP Master device operative and well connected to the BACnet MS/TP port of the INBACHIT001R000.

In a BACnet IP integration, it is necessary to have the BACnet IP client operative and well connected to the IP network and the INBACHIT001R000 connected to this same IP network through the ETH port.

Items supplied by HMS Networks for this integration are:

- Intesis INBACHIT001R000 interface with Hitachi AC external protocol firmware loaded.
- Specific connection cable to connect Hitachi AC unit with INBACHIT001R000 gateway.
- MiniUSB cable for console communication and testing power supply usage.
- Product documentation.

7.2 *Physical checking*

First point to look at to make sure that gateway is working properly is to check physical connections:

1.- Make sure that the supplied cable is correctly connected between the AC unit and the gateway. INBACHIT001R000 needs to be connected to the AC unit or externaly powered before starting the device configuration. USB port can be used, along with an external USB power converter, to power the device for testing purposes if the AC unit is not present.

2.- Check that the AC unit is connected to mains.

3.- If using BACnet MS/TP, check the EIA485 connection from the gateway to the BACnet MS/TP. Remember to verify polarity and terminal resistors configuration. If using BACnet IP, check the IP network connections.

7.3 *LED status*

On start up, all leds blink once and then turn off. After that, depending on the type of connection (MS/TP or IP) and the processes carried out, LED status may change.

Please, check the table below for more information:

LED	Status	Description
L1 (red)	ON Steady	AC communication error
	Blinking	AC error
	Off	No errors present
L5 (green)	ON Steady	BACnet MS/TP link
	Blinking	Activity on the BACnet MS/TP bus
L6 (green)	ON Steady	Ethernet link
	Blinking	Activity on BACnet IP
L1+L4+L5	Blinking	Device in Bootloader mode
All	Blinking	Fatal Error
All	On Steady 1 sec	On start up (for testing purposes)

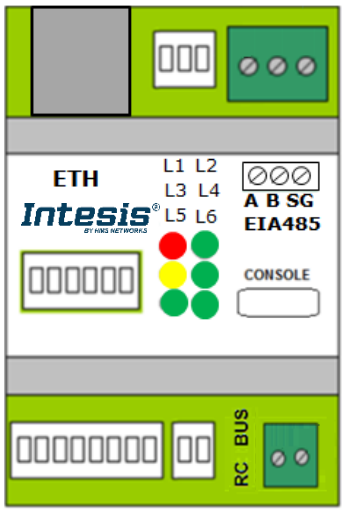

© HMS Industrial Networks S.L.U - All rights reserved
This information is subject to change without notice

7.4 *Occupancy*

Occupancy function is used to determine how the Air Conditioner unit will be set depending on the presence or absence of people in the room. Remember that the occupancy signal needs to be fed by an external sensor which indicates if there is presense or not (occupancy). This signal is processed directly in the Intesis and modifies 3 parameters from the AC system: Setpoint, Mode and On/Off.

In order to adjust the settings to the current mode (Heat or Cool), the gateway offers 6 different BACnet objects:

- OccupiedCoolSetPoint
- OccupiedHeatSetPoint
- UnoccupiedCoolSetPoint
- UnoccupiedHeatSetPoint
- OccupancyContinousCheck
- UnoccupiedDeadbandAction

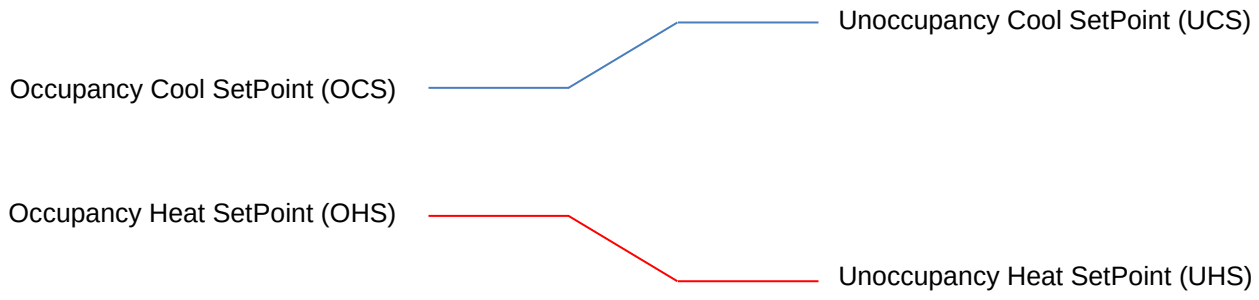

***Occupancy/Unoccupancy Cool Setpoint (OCS/UCS)*:** Default value for setpoint temperature to be set when Occupancy/Unoccupancy is enabled and current mode is cool. UCS must always be greater or equal to OCS. Difference between OCS and OHS must be greater or equal to 2ºC/4ºF.

***Occupancy/Unoccupancy Heat Setpoint (OHS/UHS)*:** Default value for setpoint temperature to be set when Occupancy/Unoccupancy is enabled and current mode is heat. UHS must always be smaller or equal to OHS. Difference between OCS and OHS must be greater or equal to 2ºC/4ºF.

Occupancy Continous check: This checkbox is used to determine if the gateway will check the occupancy conditions constantly (check) or not (unchecked) by default. That means that with the the checkbox active, conditions are checked on each change of the temperature too, while if unchecked, this is only checked when the occupancy status changes.

Unoccupied Deadband Action: This determines the action to be taken while the ambient temperature is in between the deadband. If unchecked, indoor unit will turn off and if checked it will remain on.

When **occupancy mode is active** (there is presence in the room), according to current room temperature, **mode**, **setpoint** and **on/off** will be set to:

Condition	Setpoint	Mode	On/Off
Room temperature > OCS	Current OCS value	Cool	On
Room temperature < OHS	Current OHS value	Heat	On
OCS < Room temperature > OHS	OCS/OHS depending on current mode (If Fan or Dry mode is active, no setpoint is sent)	Current mode	On

When **unoccupancy mode is active** (there is no presence in the room), according to current room temperature, **mode**, **setpoint** and **on/off** will be set to:

© HMS Industrial Networks S.L.U - All rights reserved
This information is subject to change without notice

Condition	Setpoint	Mode	On/Off
Room temperature > OCS	Current UCS value	Cool	On
Room temperature < OHS	Current UHS value	Heat	On
OCS < Room temperature > OHS	UCS/UHS depending on current mode (If Fan or Dry mode is active, no setpoint is sent)	Current mode	On (Deadband action =1)
			Off (Deadband action =0)

These checks will be done each time the indoor unit occupancy status is changed, and if ***check continuously*** checkbox is checked, also each time the room temperature changes.

The configuration set on the occupany signals is applied from the very first moment the occupancy signal is enabled until the user changes the setpoint, mode or the On/Off signal, which disables occupancy functionality.

© HMS Industrial Networks S.L.U - All rights reserved
This information is subject to change without notice

7.5 *Configuration tool*

In order to check the status of the device, signals values and general configuration, the INBACHIT001R000 includes a configuration tool. This tool is accessible only through the Ethernet port, so keep in mind that you need to switch **SW3** P1 'ON'.

By default, the device comes with a static IP, so please check that you are in the same network domain in order to connect. The default IP is: **192.168.100.246**.

7.5.1 Home

Once you reach the page, remember to login with your user and password. To access the login site, click on "User".

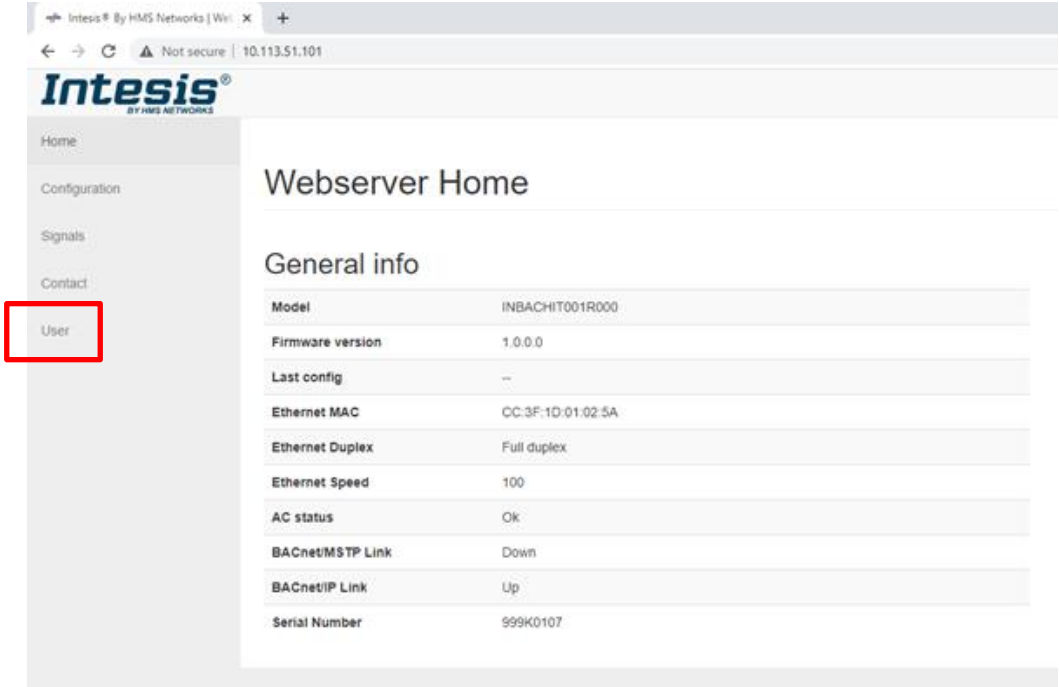

There are two access levels: ***admin*** and ***operator***. The default password value for each user is ***admin*** ➔ admin and ***operator*** ➔ operator.

Admin has total control on the device configuration, and it can control the AC unit from the web app itself. On the contrary, operator can only read information from the current configuration and can operate the AC. Priority used when using the operator mode is always set to 8.

IMPORTANT: Once configuration is done, we recommend changing the passwords to ensure access control on the gateway.

© HMS Industrial Networks S.L.U - All rights reserved
This information is subject to change without notice

7.5.2 Configuration

On the configuration section, general **BACnet settings**, specific **BACnet MS/TP** and **BACnetIP settings**, **IP seetings** and **AC settings** can be configured. Each type of parameter is grouped in different blocks.

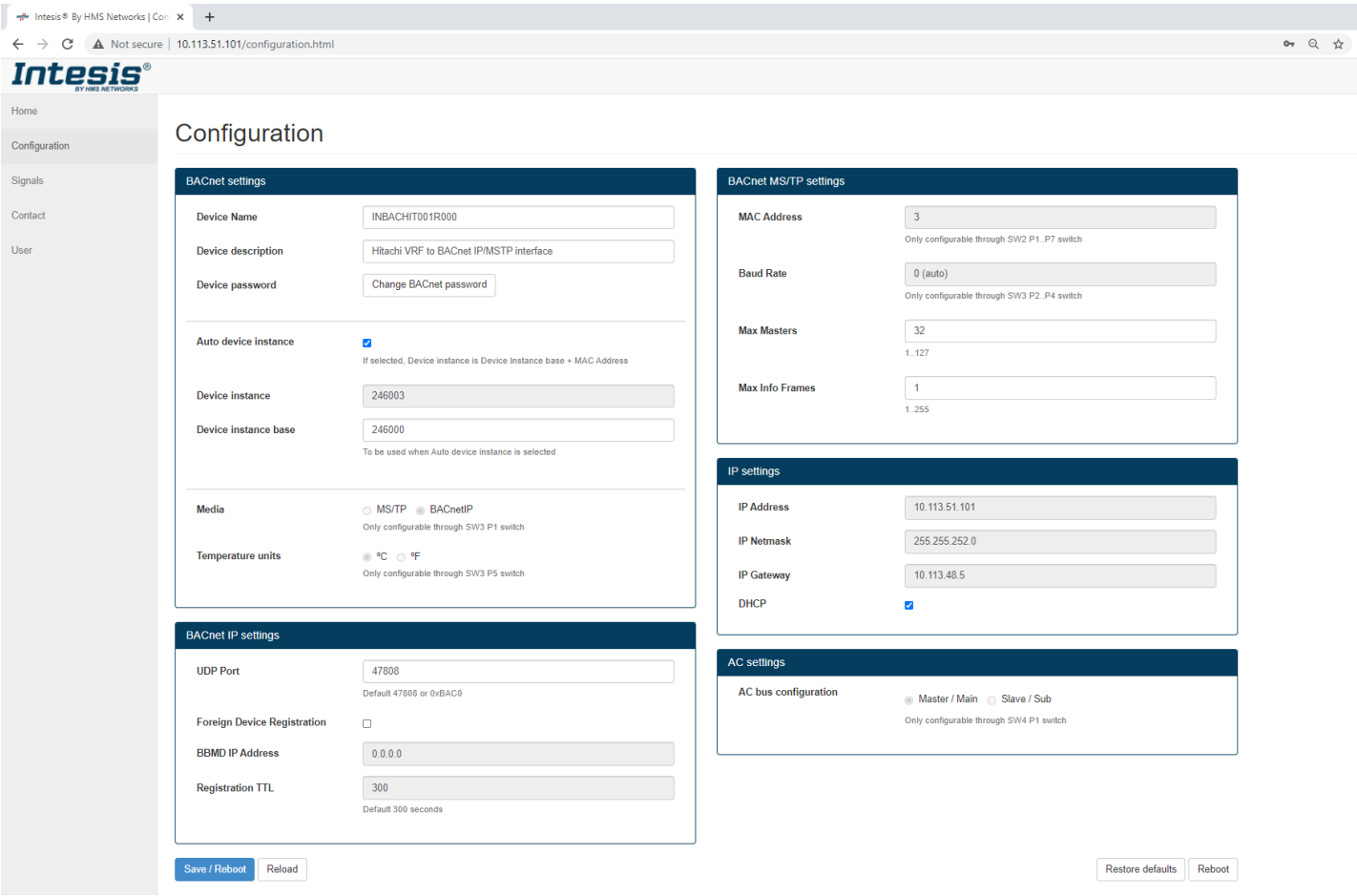

7.5.3 Signals

On this section a complete list of the available BACnet objects, their **type**, **Object Instance**, **priority** and current **value** is shown. Clinking on the "**Edit**" button, users will be able to command the system having feedback from both BACnet and AC system.

It also allows continuous monitoring of the current status of the variables. The refresh time for the AC information is shown using a progression bar in the top and the bottom of the signals list.

© HMS Industrial Networks S.L.U - All rights reserved
This information is subject to change without notice

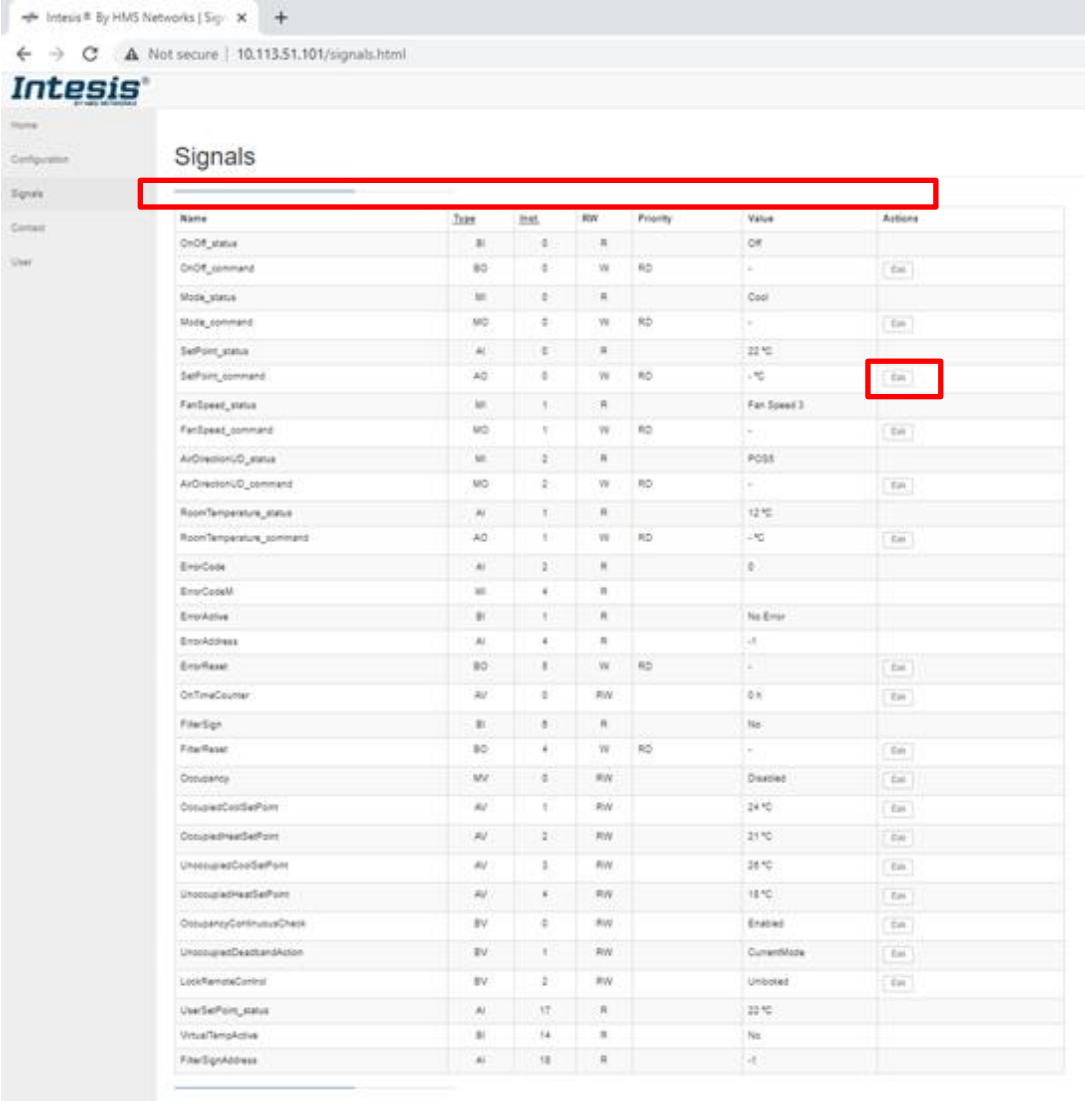

When you click on “Edit”, you will have the chance to enter a new **value** to be applied and also the **priority**.

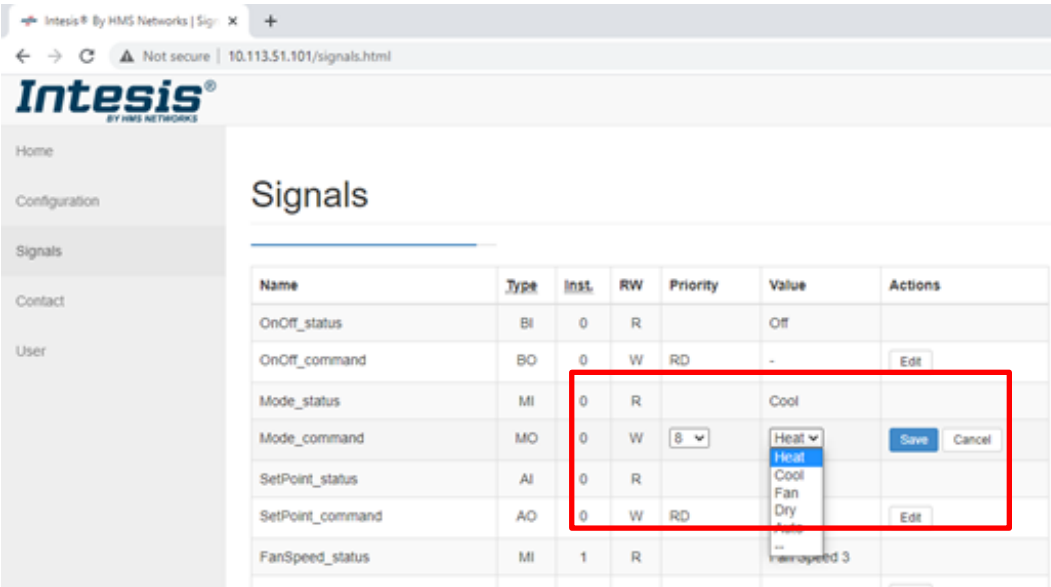

NOTE: If you want to relinquish the selected priority, please use the ‘--‘command.

© HMS Industrial Networks S.L.U - All rights reserved
This information is subject to change without notice

8 AC Unit Types compatibility

Please, check compatibility list at to know which Hitachi units are compatible with our gateway.

https://www.intesis.com/docs/compatibilities/inxxxhit001r000_compatibility

© HMS Industrial Networks S.L.U - All rights reserved
This information is subject to change without notice

9 Technical specs

Enclosure	Plastic, type PC (UL 94 V-0). Dimensions: 93mm x 53mm x 58mm. Weight: 85 g
Color	Light Grey. RAL 7035.
Terminal wiring (for power supply and low-voltage signals)	Per terminal: solid wires or stranded wires (twisted or with ferrule) 1 core: 0.5 … 2.5mm^2 2 cores: 0.5 … 1.5mm^2 3 cores: not permitted
Console Port	Mini USB port for console usage
Mounting	Wall. DIN rail EN60715 TH35.
BACnet MS/TP port	1 x EIA485 Plug-in screw terminal block (2 poles + GND)
BACnet IP port	1 x Ethernet 100BT RJ45.
LED indicators	6 x Gateway/Communication status
Operational temperature	0°C to +40°C
Operational humidity	5% to 95%, non-condensing
Isolation Voltage	*4000 VDC (between AC unit and EIA-485)* *1000 VDC (between AC unit and USB)*
Protection	IP20 (IEC60529).

10 Dimensions

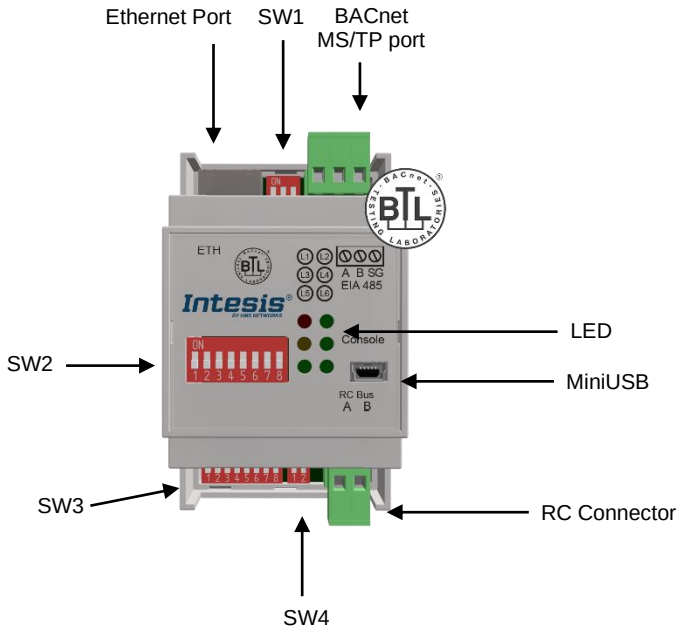

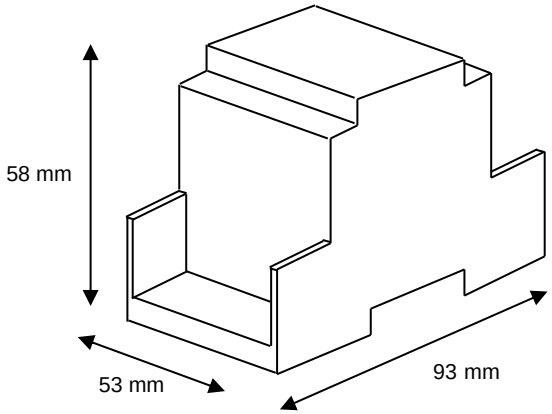

© HMS Industrial Networks S.L.U - All rights reserved
This information is subject to change without notice

11 Error codes

11.1 *Intesis Codes*

Error Code	Error CodeM		Error in Controller	Error Category	Error Description
	Value	Text			
0	1	_	N/A	Intesis AC Interface	No active error
-1 (65535)	2	CommError	N/A	Intesis AC Interface	Error in the communication of Intesis AC Interface or the Remote Controller with the AC Unit
-3	3	MainSub RC Settings	N/A	Indoor Unit	Tripping of Protection Device
-4	4	Initialization	N/A	Outdoor Unit	Tripping of Protection Device

11.2 *AC System Codes*

Error Code	Error CodeM		Error in Controller	Error Category	Error Description
	Value	Text			
1	5	E-01	1	Indoor Unit	Tripping of Protection Device
2	6	E-02	2	Outdoor Unit	Tripping of Protection Device
3	7	E-03	3	Transmission	Abnormality between Indoor and Outdoor
4	8	E-04	4	Inverter	Abnormality between Inverter and Control PCB
5	9	E-05	5	Transmission	Abnormality in Power Source Wiring
6	10	E-06	6	Voltage drop	Fan motor locked, overload, over current
			6.		Swing flap motor error
7	11	E-07	7	Cycle	Overcurrent of AC input
8	12	E-08	8		Electronic expansion valve drive error
9	13	E-09	9	Outdoor Unit	Heater overheat

© HMS Industrial Networks S.L.U - All rights reserved
This information is subject to change without notice

Error Code	Error CodeM		Error in Controller	Error Category	Error Description
	Value	Text			
17	14	E-11	11	Sensor on Indoor Unit	Dust collector error / No-maintenance filter error
18	15	E-12	12		Capacity setting error (indoor)
19	16	E-13	13		Shortage of water supply
20	17	E-14	14		Malfunctions of a humidifier system (water leaking)
25	18	E-19	19		Malfunctions in a sensor system
33	19	E-21	21	Sensor on Outdoor Unit	Sensor system of drain water error
34	20	E-22	22		Heat exchanger (1) (Liquid pipe) thermistor system error
35	21	E-23	23		Heat exchanger (1) (Gas pipe) thermistor system error
36	22	E-24	24		Sensor system error of fan motor locked, overload
41	23	E-29	29		Sensor system of swing flag motor error
48	24	E-30	30		Sensor system of over-current of AC input
49	25	E-31	31		Suction air thermistor error
50	26	E-32	32		Discharge air thermistor system error
53	27	E-35	35		Contamination sensor error
54	28	E-36	36		Humidity sensor error
56	29	E-38	38		Remote control thermistor error
57	30	E-39	39		Radiation sensor error

© HMS Industrial Networks S.L.U - All rights reserved
This information is subject to change without notice

Error Code	Error CodeM		Error in Controller	Error Category	Error Description
	Value	Text			
67	31	E-43	43	Pressure	High pressure switch sensor
68	32	E-44	44		Protection devices activated
69	33	E-45	45		Outdoor unit PCB assembly failure
70	34	E-46	46		High pressure switch (HPS) activated
71	35	E-47	47		Low pressure switch (LPS) activated
81	36	E-51	51	Inverter	Overload of inverter compressor motor
82	37	E-52	52		Over current of STD compressor motor
83	38	E-53	53		Overload of fan motor / Over current of fan motor
84	39	E-54	54		Over current of AC input
86	40	E-56	56	Outdoor Fan	Electronic expansion valve drive error
87	41	E-57	57		Four-way valve error
88	42	E-58	58		Pump motor over current
176	44	E-B0	b0	IU model setting	Incorrect setting address or refrigerant cycle
177	43	E-B1	b1	Number setting	Incorrect setting address or refrigerant cycle
181	44	E-B5	b5		Incorrect setting of indoor unit number for H-LINK type
238	45	E-EE	EE	Inverter	Water temperature abnormal

In case you detect an error code not listed, contact the technical support service of the HVAC Manufacturer for more information on the error meaning.

© HMS Industrial Networks S.L.U - All rights reserved
This information is subject to change without notice