BACnet Server

LonWorks

USER MANUAL

Issue date: 05/2024 r1.4 ENGLISH

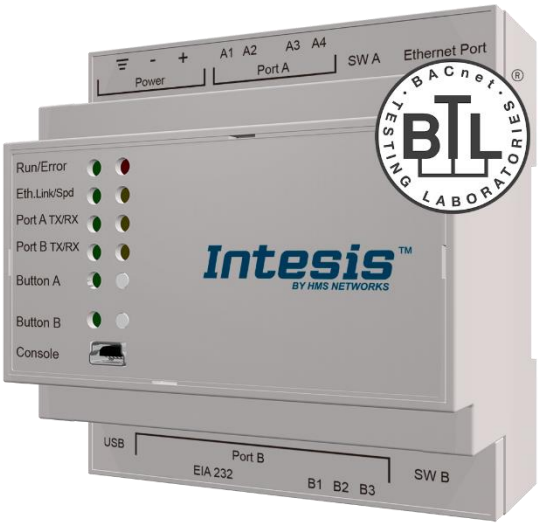

14 rue Edouard Petit
42000 St-Etienne

Tel : +33 477 92 03 56
Email : contact@rg2i.com
www.rg2i.com

Important User Information

Disclaimer

The information in this document is for informational purposes only. Please inform HMS Industrial Networks of any inaccuracies or omissions found in this document. HMS Industrial Networks disclaims any responsibility or liability for any errors that may appear in this document.

HMS Industrial Networks reserves the right to modify its products in line with its policy of continuous product development. The information in this document shall therefore not be construed as a commitment on the part of HMS Industrial Networks and is subject to change without notice. HMS Industrial Networks makes no commitment to update or keep current the information in this document.

The data, examples and illustrations found in this document are included for illustrative purposes and are only intended to help improve understanding of the functionality and handling of the product. In view of the wide range of possible applications of the product, and because of the many variables and requirements associated with any particular implementation, HMS Industrial Networks cannot assume responsibility or liability for actual use based on the data, examples or illustrations included in this document nor for any damages incurred during installation of the product. Those responsible for the use of the product must acquire sufficient knowledge in order to ensure that the product is used correctly in their specific application and that the application meets all performance and safety requirements including any applicable laws, regulations, codes and standards. Further, HMS Industrial Networks will under no circumstances assume liability or responsibility for any problems that may arise as a result from the use of undocumented features or functional side effects found outside the documented scope of the product. The effects caused by any direct or indirect use of such aspects of the product are undefined and may include e.g. compatibility issues and stability issues.

© HMS Industrial Networks S.L.U - All rights reserved
This information is subject to change without notice

Gateway for the integration of LonWorks devices into BACnet MSTP or BACnet IP enabled monitoring and control systems.

ORDER CODE	LEGACY ORDER CODE
INBACLON1000000	IBBACLON1000000
INBACLON2500000	IBBACLON2500000
INBACLON6000000	IBBACLON6000000
INBACLON1K20000	IBBACLON1K20000
INBACLON3K00000	IBBACLON3K00000

© HMS Industrial Networks S.L.U - All rights reserved
This information is subject to change without notice

INDEX

1 Description 6
1.1 Introduction 6
1.2 Functionality 7
1.3 Gateway's capacity 7
2 Protocol Implementation Conformance Statement 8
2.1 BACnet Standardized Device Profile (Annex L): 8
2.2 Segmentation Capability: 8
2.3 Data Link Layer Options: 8
2.4 Device Address Binding: 9
2.5 Networking Options: 9
2.6 Character Sets Supported 9
2.7 Gateway 9
3 BACnet Interoperability Building Blocks Supported (BIBBs) 10
3.1 Data Sharing BIBBs 10
3.2 Alarm and Event Management BIBBs 10
3.3 Scheduling BIBBs 11
3.4 Trending BIBBs 11
3.5 Network Management BIBBs 11
3.6 Device Management BIBBs 12
4 Service Types 13
5 Objects 14
5.1 Supported Object Types 14
5.2 Objects and properties 15
5.2.1 INBACLON---0000 (Device Object Type) 15
5.2.2 Analog Input Object Type 17
5.2.3 Analog Output Object Type 18
5.2.4 Analog Value Object Type 19
5.2.5 Binary Input Object Type 20
5.2.6 Binary Output Object Type 21
5.2.7 Binary Value Object Type 22
5.2.8 Multistate Input Object Type 23
5.2.9 Multistate Output Object Type 24
5.2.10 Multistate Value Object Type 25
5.2.11 Calendar Object Type 26
5.2.12 Schedule Object Type 27
5.2.13 Notification Class Object Type 28
5.2.14 Trend Log Object Type 29
5.2.15 Trend Log Multiple Object Type 30
6 Connections 31
6.1 Powering the device 32
6.2 Connection to BACnet 32
6.2.1 BACnet IP 32
6.2.2 BACnet MSTP 32
6.3 Connection to LonWorks 33
6.3.1 LonWorks FT-10 33
6.4 Connection to the configuration tool 33
7 Set-up process and troubleshooting 34
7.1 Pre-requisites 34
7.2 Intesis MAPS. Configuration & monitoring tool for Intesis BACnet series 34
7.2.1 Introduction 34
7.2.2 Connection 34
7.2.3 Configuration tab 35
7.2.4 Signals 35
7.2.5 Sending the configuration to Intesis 36
7.2.6 Diagnostic 36
7.3 Set-up procedure 38
8 Electrical & Mechanical Features 39

© HMS Industrial Networks S.L.U - All rights reserved
This information is subject to change without notice

9 Dimensions 40
10 Annex A – Quick reference for LonWorks setup parameters 41
10.1 LON General Configuration 41
10.2 LON Devices Configuration 42
10.3 User-defined Network Variable Types (UNVT) Configuration 43

© HMS Industrial Networks S.L.U - All rights reserved
This information is subject to change without notice

1 Description

1.1 *Introduction*

This document describes the integration of Lonworks (LON) into BACnet MSTP or BACnet IP compatible devices and systems using the Intesis *BACnet Server – LonWorks* gateway.

The aim of this integration is to make accessible LON system signals and resources from a BACnet based control system or device, as if it was a part of the own BACnet system and vice-versa.

The gateway acts as a BACnet/IP Server or BACnet MSTP device in its BACnet interface, allowing other BACnet devices to perform subscription (COV) requests and reads/writes to its internal points. From the LON system point of view, Intesis acts as a LON client device in its LON interface. The readings of the LON device(s) is performed by Intesis by automatic continuous polling.

Configuration is carried out using the configuration software Intesis™ MAPS.

This document assumes that the user is familiar with BACnet and LON technologies and their technical terms.

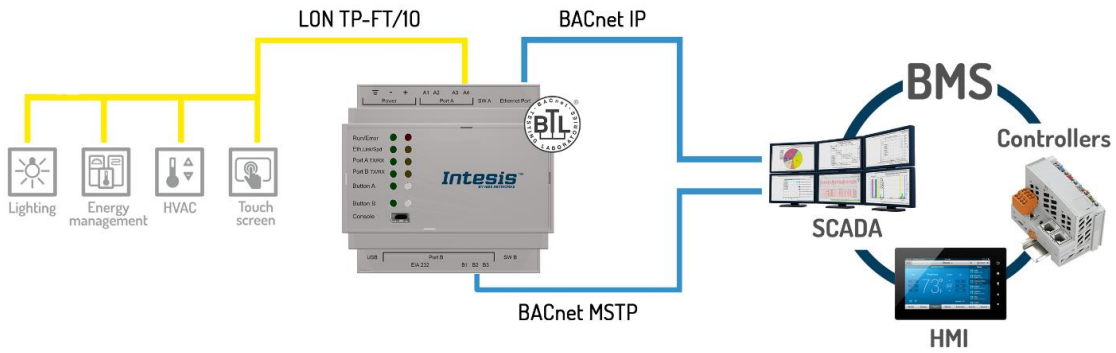

Integration of LonWorks devices
to BACnet IP or MSTP control and monitoring systems

© HMS Industrial Networks S.L.U - All rights reserved
This information is subject to change without notice

1.2 *Functionality*

From the LON system point of view, after the start up process, Intesis reads continuously the points configured to be read in the LON devices and updates in its memory all the values received from the LON system.

From the BACnet system point of view, after the start up process, the gateway listens for any subscription (COV) request, serves any polling request, or performs any writing request of its internal points received from the BACnet system. The values received from BACnet are immediately written in the associated LON network variable (nv) of the corresponding LON device.

All the LON nv's in the LON device are associated to a *BACnet object*, with this, all the LON system (all the devices) is seen as *a single BACnet device with many objects* from the BACnet system point of view, each object corresponding to a LON nv.

When a new value is read from LON for a given nv, the new value is updated in the gateway's memory and, if this signal is associated to a BACnet active subscription then the new value will be sent to the subscripted BACnet device(s).

In the continuous polling of the LON devices, if a non-response of the BACnet device is detected, the corresponding virtual signal inside Intesis will be activated indicating communication error with the LON device. These virtual signals indicating communication status in real time with the LON devices are also accessible from BACnet, like the rest of the points of the gateway.

1.3 *Gateway's capacity*

Intesis capacity is listed below:

Element	100 version	250 version	600 version	1200 version	3000 version	Notes
Type of BACnet devices	IP / MSTP					Communication with BACnet IP and MSTP
Number of BACnet Objecs	100	250	600	1200	3000	Maximum number of points that can be defined in the virtual BACnet device inside the gateway
Number of BACnet Subscriptions (COV) requests	200	500	1200	2400	6000	Maximum number of BACnet subscriptions (COV) requests accepted by the gateway
Type of LonWorks slave devices	LonWorks FT-10					Those supporting LonWorks Free Topology channel (FT-10)

© HMS Industrial Networks S.L.U - All rights reserved
This information is subject to change without notice

2 Protocol Implementation Conformance Statement

BACnet Protocol Implementation Conformance Statement (PICS)

Date: *2019-01-02*
Vendor Name: *HMS Industrial Networks S.L.U*
Product Name: *INBACLON---0000*
Product Model Number: *INBACLON---0000*
Application Software Version: *1.0*
Firmware Revision: *1.0.0.0*
BACnet Protocol Revision: *14*

Product Description:

LonWorks – BACnet MS/TP & BACnet IP Gateway

Abstraction of LonWorks Network Variables as BACnet Objects.

2.1 *BACnet Standardized Device Profile (Annex L):*

☐ BACnet Operator Workstation (B-OWS)

☐ BACnet Building Controller (B-BC)

☒ BACnet Advanced Application Controller (B-AAC)

☐ BACnet Application Specific Controller (B-ASC)

☐ BACnet Smart Sensor (B-SS)

☐ BACnet Smart Actuator (B-SA)

Additional BACnet Interoperability Building Blocks Supported (Annex K):
Reference of BIBBs List

2.2 *Segmentation Capability:*

Segmented request supported	☐ No	☒ Yes	Window Size *16*
Segmented responses supported	☐ No	☒ Yes	Window Size *16*

2.3 *Data Link Layer Options:*

☒ BACnet IP, (Annex J)
☒ BACnet IP, (Annex J), Foreign Device
☐ ISO 8802-3, Ethernet (Clause 7)
☐ ANSI/ATA 878.1, 2.5 Mb. ARCNET (Clause 8)
☐ ANSI/ATA 878.1, RS-485 ARCNET (Clause 8), baud rate(s) ____
☒ MS/TP master (Clause 9), baud rate(s): 9600, 19200, 38400, 57600, 76800, 115200
☐ MS/TP slave (Clause 9), baud rate(s):
☐ Point-To-Point, EIA 232 (Clause 10), baud rate(s):
☐ Point-To-Point, modem, (Clause 10), baud rate(s):
☐ LonTalk, (Clause 11), medium: _____
☐ Other:

© HMS Industrial Networks S.L.U - All rights reserved
This information is subject to change without notice

2.4 *Device Address Binding:*

Is static device binding supported? (This is currently necessary for two-way communication with MS/TP slaves and certain other devices.) ☐ Yes ☒ No

2.5 *Networking Options:*

☐ Router, Clause 6 - List all routing configurations, e.g., ARCNET-Ethernet, Ethernet-MS/TP, etc.
☐ Annex H, BACnet Tunneling Router over IP
☒ BACnet/IP Broadcast Management Device (BBMD)
Does the BBMD support registrations by Foreign Devices? ☒ Yes ☐ No

2.6 *Character Sets Supported*

Indicating support for multiple character sets does not imply that they can all be supported simultaneously.

☒ ISO 10646 (UTF-8)	☐ IBM™/Microsoft™ DBCS	☐ ISO 8859-1
☐ ISO 10646 (UCS-2)	☐ ISO 10646 (UCS-4)	☐ JIS X 0208

2.7 *Gateway*

If this product is a communication gateway, describe the types of non-BACnet equipment/network(s) that the gateway supports:

LonWorks FT-10 networks / devices.

© HMS Industrial Networks S.L.U - All rights reserved
This information is subject to change without notice

3 BACnet Interoperability Building Blocks Supported (BIBBs)

3.1 *Data Sharing BIBBs*

BIBB Type		Active	BACnet Service	Initiate	Execute
DS-RP-A	Data Sharing-ReadProperty–A	☐	ReadProperty	☒	☐
DS-RP-B	Data Sharing-ReadProperty–B	☒	ReadProperty	☐	☒
DS-RPM-A	Data Sharing-ReadPropertyMultiple–A	☐	ReadPropertyMultiple	☒	☐
DS-RPM-B	Data Sharing-ReadPropertyMultiple–B	☒	ReadPropertyMultiple	☐	☒
DS-RPC-A	Data Sharing-ReadPropertyConditiona–A	☐	ReadPropertyConditional	☒	☐
DS-RPC-B	Data Sharing-ReadPropertyConditional–B	☐	ReadPropertyConditional	☐	☒
DS-WP-A	Data Sharing-WriteProperty–A	☐	WriteProperty	☒	☐
DS-WP-B	Data Sharing-WriteProperty–B	☒	WriteProperty	☐	☒
DS-WPM-A	Data Sharing-WritePropertyMultiple–A	☐	WritePropertyMultiple	☒	☐
DS-WPM-B	Data Sharing-WritePropertyMultiple–B	☒	WritePropertyMultiple	☐	☒
DS-COV-A	Data Sharing-COV–A	☐	SubscribeCOV	☒	☐
		☐	ConfirmedCOVNotification	☐	☒
		☐	UnconfirmedCOVNotification	☐	☒
DS-COV-B	Data Sharing-COV–B	☒	SubscribeCOV	☐	☒
		☒	ConfirmedCOVNotification	☒	☐
		☒	UnconfirmedCOVNotification	☒	☐
DS-COVP-A	Data Sharing-COVP–A	☐	SubscribeCOVProperty	☒	☐
		☐	ConfirmedCOVNotification	☐	☒
		☐	UnconfirmedCOVNotification	☐	☒
DS-COVP-B	Data Sharing-COVP–B	☐	SubscribeCOVProperty	☐	☒
		☐	ConfirmedCOVNotification	☒	☐
		☐	UnconfirmedCOVNotification	☒	☐
DS-COVU-A	Data Sharing-COV-Unsubscribed–A	☐	UnconfirmedCOVNotification	☐	☒
DS-COVU-B	Data Sharing-COV- Unsubscribed -B	☐	UnconfirmedCOVNotification	☒	☐

3.2 *Alarm and Event Management BIBBs*

BIBB Type		Active	BACnet Service	Initiate	Execute
AE-N-A	Alarm and Event-Notification–A	☐	ConfirmedEventNotification	☐	☒
		☐	UnconfirmedEventNotification	☐	☒
AE-N-I-B	Alarm and Event-Notification Internal–B	☒	ConfirmedEventNotification	☒	☐
		☒	UnconfirmedEventNotification	☒	☐
AE-N-E-B	Alarm and Event-Notification External–B	☐	ConfirmedEventNotification	☒	☐
		☐	UnconfirmedEventNotification	☒	☐
AE-ACK-A	Alarm and Event-ACK–A	☐	AcknowledgeAlarm	☒	☐
AE-ACK-B	Alarm and Event-ACK–B	☒	AcknowledgeAlarm	☐	☒
AE-ASUM-A	Alarm and Event-Alarm Summary–A	☐	GetAlarmSummary	☒	☐
AE-ASUM-B	Alarm and Event-Alarm Summary–B	☒	GetAlarmSummary	☐	☒
AE-ESUM-A	Alarm and Event-Enrollment Summary-A	☐	GetEnrollmentSummary	☒	☐
AE-ESUM-B	Alarm and Event-Enrollment Summary-B	☐	GetEnrollmentSummary	☐	☒
AE-INFO-A	Alarm and Event-Information–A	☐	GetEventInformation	☒	☐
AE-INFO-B	Alarm and Event-Information–B	☒	GetEventInformation	☐	☒
AE-LS-A	Alarm and Event-LifeSafety–A	☐	LifeSafetyOperation	☒	☐
AE-LS-B	Alarm and Event-LifeSafety–B	☐	LifeSafetyOperation	☐	☒

© HMS Industrial Networks S.L.U - All rights reserved
This information is subject to change without notice

3.3 *Scheduling BIBBs*

BIBB Type		Active	BACnet Service	Initiate	Execute
SCHED-A	Scheduling–A *(must support DS-RP-A and DS-WP-A)*	☐			
SCHED-I-B	Scheduling-Internal–B *(shall support DS-RP-B and DS-WP-B)* *(shall also support ether DM-TS-B or DS-UTC-B)*	☒			
SCHED-E-B	Scheduling-External–B *(shall support SCHED-I-B and DS-WP-A)*	☐			

3.4 *Trending BIBBs*

BIBB Type		Active	BACnet Service	Initiate	Execute
T-VMT-A	Trending - Viewing and Modifying Trends–A	☐	ReadRange	☒	☐
T-VMT-I-B	Trending - Viewing and Modifying Trends Inernal–B	☒	ReadRange	☐	☒
T-VMT-E-B	Trending - Viewing and Modifying Trends External–B	☐	ReadRange	☐	☒
T-ATR-A	Trending - Automated Trend Retrieval–A	☐	ConfirmedEventNotification	☐	☒
		☐	ReadRange	☒	☐
T-ATR-B	Trending - Automated Trend Retrieval–B	☒	ConfirmedEventNotification	☒	☐
		☒	ReadRange	☐	☒

3.5 *Network Management BIBBs*

BIBB Type		Active	BACnet Service	Initiate	Execute
NM-CE-A	Network Management - Connection Establishment–A	☐	Establish-Connection-To-Network	☒	☐
		☐	Disconnect-Connection-To-Network	☒	☐
NM-CE-B	Network Management - Connection Establishment– B	☐	Establish-Connection-To-Network	☐	☒
		☐	Disconnect-Connection-To-Network	☐	☒
NM-RC-A	Network Management - Router Configuration–A	☐	Who-Is-Router-To-Network	☒	☐
		☐	I-Am-Router-To-Network	☐	☒
		☐	I-Could-Be-Router-To-Network	☐	☒
		☐	Initialize-Routing-Table	☒	☐
		☐	Initialize-Routing-Table-Ack	☐	☒
NM-RC-B	Network Management - Router Configuration–B	☐	Who-Is-Router-To-Network	☒	☒
		☐	I-Am-Router-To-Network	☒	☒
		☐	Initialize-Routing-Table	☐	☒
		☐	Initialize-Routing-Table-Ack	☒	☐

© HMS Industrial Networks S.L.U - All rights reserved
This information is subject to change without notice

3.6 *Device Management BIBBs*

BIBB Type		Active	BACnet Service	Initiate	Execute
DM-DDB-A	Device Management - Dynamic Device Binding–A	☒	Who-Is	☒	☐
		☒	I-Am	☐	☒
DM-DDB-B	Device Management - Dynamic Device Binding–B	☒	Who-Is	☐	☒
		☒	I-Am	☒	☐
DM-DOB-A	Device Management - Dynamic Object Binding–A	☐	Who-Has	☒	☐
		☐	I-Have	☐	☒
DM-DOB-B	Device Management - Dynamic Object Binding–B	☒	Who-Has	☐	☒
		☒	I-Have	☒	☐
DM-DCC-A	Device Management - DeviceCommunicationControl–A	☐	DeviceCommunicationControl	☒	☐
DM-DCC-B	Device Management - DeviceCommunicationControl–B	☒	DeviceCommunicationControl	☐	☒
DM-PT-A	Device Management - PrivateTransfer–A	☐	ConfirmedPrivateTransfer	☒	☐
		☐	UnconfirmedPrivateTransfer	☒	☐
DM-PT-B	Device Management - PrivateTransfer–B	☐	ConfirmedPrivateTransfer	☐	☒
		☐	UnconfirmedPrivateTransfer	☐	☒
DM-TM-A	Device Management - Text Message–A	☐	ConfirmedTextMessage	☒	☐
		☐	UnconfirmedTextMessage	☒	☐
DM-TM-B	Device Management - Text Message–B	☐	ConfirmedTextMessage	☐	☒
		☐	UnconfirmedTextMessage	☐	☒
DM-TS-A	Device Management - TimeSynchronization–A	☐	TimeSynchronization	☒	☐
DM-TS-B	Device Management - TimeSynchronization–B	☒	TimeSynchronization	☐	☒
DM-UTC-A	Device Management - UTCTimeSynchronization–A	☐	UTCTimeSynchronization	☒	☐
DM-UTC-B	Device Management - UTCTimeSynchronization–B	☐	UTCTimeSynchronization	☐	☒
DM-RD-A	Device Management - ReinitializeDevice–A	☐	ReinitializeDevice	☒	☐
DM-RD-B	Device Management - ReinitializeDevice–B	☒	ReinitializeDevice	☐	☒
DM-BR-A	Device Management - Backup and Restore–A	☐	AtomicReadFile	☒	☐
		☐	AtomicWriteFile	☒	☐
		☐	CreateObject	☒	☐
		☐	ReinitializeDevice	☒	☐
DM-BR-B	Device Management - Backup and Restore–B	☐	AtomicReadFile	☐	☒
		☐	AtomicWriteFile	☐	☒
		☐	ReinitializeDevice	☐	☒
DM-R-A	Device Management - Restart–A	☐	UnconfimedCOVNotification	☐	☒
DM-R-B	Device Management - Restart–B	☐	UnconfimedCOVNotification	☒	☐
DM-LM-A	Device Management - List Manipulation–A	☐	AddListElement	☒	☐
		☐	RemoveListElement	☒	☐
DM-LM-B	Device Management - List Manipulation–B	☐	AddListElement	☐	☒
		☐	RemoveListElement	☐	☒
DM-OCD-A	Device Management - Object Creation and Deletion–A	☐	CreateObject	☒	☐
		☐	DeleteObject	☒	☐
DM-OCD-B	Device Management - Object Creation and Deletion–B	☐	CreateObject	☐	☒
		☐	DeleteObject	☐	☒
DM-VT-A	Device Management - Virtual Terminal–A	☐	VT-Open	☒	☐
		☐	VT-Close	☒	☒
		☐	VT-Data	☒	☒
DM-VT-B	Device Management - Virtual Terminal–B	☐	VT-Open	☐	☒
		☐	VT-Close	☒	☒
		☐	VT-Data	☒	☒

© HMS Industrial Networks S.L.U - All rights reserved
This information is subject to change without notice

4 Service Types

Service type	Service name	Supported	Remarks
Alarm and Event Services	AcknowledgeAlarm	☒	
	ConfirmedCOVNotification	☐	
	ConfirmedEventNotification	☐	
	GetAlarmSummary	☒	
	GetEnrollmentSummary	☐	
	SubscribeCOV	☒	
File Access Services	AtomicReadFile	☐	
	AtomicWriteFile	☐	
Object Access Services	AddListElement	☐	
	RemoveListElement	☐	
	CreateObject	☐	
	DeleteObject	☐	
	ReadProperty	☒	
	ReadPropertyConditional	☐	
	ReadPropertyMultiple	☒	
	ReadRange	☒	
	WriteProperty	☒	
	WritePropertyMultiple	☒	
Remote Device Management Services	DeviceComminicationControl	☒	
	ConfirmedPrivateTransfer	☐	
	ConfirmedTextMessage	☐	
	ReinitializeDevice	☒	
Virtual Terminal Services	VtOpen	☐	
	VtClose	☐	
	VtData	☐	
Security Services	Authenticate	☐	
	RequestKey	☐	
Unconfirmed Services	I-Am	☒	
	I-Have	☐	
	UnconfirmedCOVNotification	☐	
	UnconfirmedEventNotification	☐	
	UnconfirmedPrivateTransfer	☐	
	UnconfirmedTextMessage	☐	
	TimeSynchronization	☒	
	UtcTimeSynchronization	☐	
	Who-Has	☒	
	Who-Is	☒	
	LifeSafetyOperation	☐	
	SubscribeCOVProperty	☐	
	GetEventInformation	☒	

© HMS Industrial Networks S.L.U - All rights reserved
This information is subject to change without notice

5 Objects

5.1 *Supported Object Types*

The objects supported are shown in the table below.

Object Type	ID	Supported	Management Point
Analog-Input	0	☒	
Analog-Output	1	☒	
Analog-Value	2	☒	
Averaging	18	☐	
Binary-Input	3	☒	
Binary-Output	4	☒	
Binary-Value	5	☒	
Calendar	6	☒	
Command	7	☐	
Device	8	☒	
Event-Enrollment	9	☐	
File	10	☐	
Group	11	☐	
Life-Safety-Point	21	☐	
Life-Safety-Zone	22	☐	
Loop	12	☐	
Multistate-Input	13	☒	
Multistate-Output	14	☒	
Multistate-Value	19	☒	
Notification-Class	15	☒	
Program	16	☐	
Schedule	17	☒	
Trend-Log	20	☒	
Trend-Log-Multiple	27	☒	

© HMS Industrial Networks S.L.U - All rights reserved
This information is subject to change without notice

5.2 *Objects and properties*

5.2.1 INBACLON---0000 (Device Object Type)

Property Identifier	Property Datatype	Value	ASHRAE	IBOX
Object_Identifier	BACnetObjectIdentifier	(Device, 246000)	R	R
Object_Name	CharacterString	"INBACLON---0000"	R	R
Object_Type	BACnetObjectType	DEVICE (8) (Device Object Type)	R	R
System_Status	BACnetDeviceStatus	OPERATIONAL (0)	R	R
Vendor_Name	CharacterString	"HMS Industrial Networks S.L.U"	R	R
Vendor_Identifier	Unsigned16	246	R	R
Model_Name	CharacterString	"INBACLON---0000 "	R	R
Firmware_Revision	CharacterString	"1.0.0.0"	R	R
Application_Software_ Version	CharacterString	"1.0.0.0"	R	R
Location	CharacterString	""	O	-
Description	CharacterString	“LonWorks to BACnet Gateway"	O	-
Protocol_Version	Unsigned	1	R	R
Protocol_Revision	Unsigned	14	R	R
Protocol_Services_ Supported	BACnetServiceSupported	Refer to section 4 [Service Types]	R	R
Protocol_Object_Types_ Supported	BACnetObjectTypes Supported	Refer to section 5.1 [Object Types]	R	R
Object_List	BACnetArray[N] of BACnetObjectIdentifier	BACnetARRAY[N]	R	R
Structured_Object_List	BACnetArray[N] of BACnetObjectIdentifier	-	O	-
Max_APDU_Length_ Accepted	Unsigned	480 when MSTP / 1476 when BACnet/IP	R	R
Segmentation_Supported	BACnetSegmentation	SEGMENTED-BOTH (0)	R	R
Max_Segments_accepted	Unsigned	16	O	R
VT_Classes_Supported	List of BACnetVTClass	-	O	-
Active_VT_Sessions	List of BACnetVTSession	-	O	-
Local_Date	Date	Current date	O	R
Local_Time	Time	Current time	O	R
UTC_Offset	INTEGER	-	O	-
Daylight_Savings_Status	BOOLEAN	-	O	-
APDU_Segment_Timeout	Unsigned	3000	R	R
APDU_Timeout	Unsigned	3000	R	R
Number_of_APDU_ Retries	Unsigned	3	R	R
List_Of_Session_Keys	List of BACnetSessionKey	-	O	-

© HMS Industrial Networks S.L.U - All rights reserved
This information is subject to change without notice

Time_Synchronization_ Recipients	List of BACnetRecipient	-	O	-
Max_Master * **	Unsigned	127	R	W
Max_Info_Frames *	Unsigned	1	O	R
Device_Address_Binding	List of BACnetAddressBinding	NULL (empty)	R	R
Database_Revision	Unsigned	0	R	R
Configuration_Files	BACnetArray[N] of BACnetObjectIdentifier	-	O	-
Last_Restore_Time	BACnetTimeStamp	-	O	-
Backup_Failure_Timeout	Unsigned16	-	O	-
Active_COV_ Subscriptions	List of BACnetCOVSubscription	List of BACnetCOVSubscription	O	R
Slave_Proxy_Enable	BACnetArray[N] of BOOLEAN	-	O	-
Manual_Slave_Address_ Binding	List of BACnetAddressBinding	-	O	-
Auto_Slave_Discovery	BACnetArray[N] of BOOLEAN	-	O	-
Slave_Address_Binding	BACnetAddressBinding	-	O	-
Last_Restart_Reason	BACnetRestartReason	-	O	-
Time_Of_Device_Restart	BACnetTimeStamp	-	O	-
Restart_Notification_ Recipients	List of BACnetRecipient	-	O	-
UTC_Time_ Synchronization_ Recipients	List of BACnetRecipient	-	O	-
Time_Synchronization_ Interval	Unsigned	-	O	-
Align_Intervals	BOOLEAN	-	O	-
Interval_Offset	Unsigned	-	O	-
Profile_Name	CharacterString	-	O	-

* Only available when MSTP is used

** Configurable through the configuration tool.

© HMS Industrial Networks S.L.U - All rights reserved
This information is subject to change without notice

5.2.2 Analog Input Object Type

Property Identifier	Property Datatype	Value	ASHRAE	IBOX
Object_Identifier	BACnetObjectIdentifier	(Analog Input, 0)	R	R
Object_Name	CharacterString	*Configurable through BACnet and Config Tool*	R	R
Object_Type	BACnetObjectType	ANALOG_INPUT (0)	R	R
Present_Value	REAL	x	R	R
Description	CharacterString	-	O	-
Device_Type	CharacterString	-	O	-
Status_Flags	BACnetStatusFlags	{FALSE, FALSE/TRUE, FALSE, FALSE}	R	R
Event_State	BACnetEventState	STATE_NORMAL (0)	R	R
Reliability	BACnetReliability	NO_FAULT_DETECTED (0), UNRELIABLE_OTHER (7)	O	R
Out_Of_Service	BOOLEAN	FALSE	R	R
Update_Interval	Unsigned	-	O	-
Units	BACnetEngineeringUnits	*Configurable through BACnet and Config Tool*	R	R
Min_Pres_Value	REAL	-	O	-
Max_Pres_Value	REAL	-	O	-
Resolution	REAL	-	O	-
COV_Increment	REAL	0	O	R
Time_Delay	Unsigned	-	O	R*
Notification_Class	Unsigned	-	O	R*
High_Limit	REAL	-	O	R*
Low_Limit	REAL	-	O	R*
Deadband	REAL	-	O	R*
Limit_Enable	BACnetLimitEnable	-	O	R*
Event_Enable	BACnetEventTransitionBits	-	O	R*
Acked_Transitions	BACnetEventTransitionBits	-	O	R*
Notify_Type	BACnetNotifyType	-	O	R*
Event_Time_Stamps	BACnetArray[N] of BACnetTimeStamp	-	O	R*
Profile_Name	CharacterString	-	O	-

* Only available when specific object has a Notification Class configured

© HMS Industrial Networks S.L.U - All rights reserved
This information is subject to change without notice

5.2.3 Analog Output Object Type

Property Identifier	Property Datatype	Value	ASHRAE	IBOX
Object_Identifier	BACnetObjectIdentifier	(Analog Output, 0)	R	R
Object_Name	CharacterString	*Configurable through BACnet and Config Tool*	R	R
Object_Type	BACnetObjectType	ANALOG_OUTPUT (1)	R	R
Present_Value	REAL	x	W	W
Description	CharacterString	-	O	-
Device_Type	CharacterString	-	O	-
Status_Flags	BACnetStatusFlags	{FALSE, FALSE, FALSE, FALSE}	R	R
Event_State	BACnetEventState	STATE_NORMAL (0)	R	R
Reliability	BACnetReliability	NO_FAULT_DETECTED (0)	O	R
Out_Of_Service	BOOLEAN	FALSE	R	R
Update_Interval	Unsigned	-	O	-
Units	BACnetEngineeringUnits	*Configurable through BACnet and Config Tool*	R	R
Min_Pres_Value	REAL	-	O	-
Max_Pres_Value	REAL	-	O	-
Resolution	REAL	-	O	-
COV_Increment	REAL	0	O	R
Priority_Array	BACnetPriorityArray	BACnetPriorityArray	R	R
Relinquish_Default	Unsigned	*Configurable through BACnet and Config Tool*	R	R
Time_Delay	Unsigned	-	O	R*
Notification_Class	Unsigned	-	O	R*
High_Limit	REAL	-	O	R*
Low_Limit	REAL	-	O	R*
Deadband	REAL	-	O	R*
Limit_Enable	BACnetLimitEnable	-	O	R*
Event_Enable	BACnetEventTransitionBits	-	O	R*
Acked_Transitions	BACnetEventTransitionBits	-	O	R*
Notify_Type	BACnetNotifyType	-	O	R*
Event_Time_Stamps	BACnetArray[N] of BACnetTimeStamp	-	O	R*
Profile_Name	CharacterString	-	O	-

* Only available when specific object has a Notification Class configured

© HMS Industrial Networks S.L.U - All rights reserved
This information is subject to change without notice

5.2.4 Analog Value Object Type

Property Identifier	Property Datatype	Value	ASHRAE	IBOX
Object_Identifier	BACnetObjectIdentifier	(Analog Value, 0)	R	R
Object_Name	CharacterString	*Configurable through BACnet and Config Tool*	R	R
Object_Type	BACnetObjectType	ANALOG_VALUE (2)	R	R
Present_Value	REAL	x	R	W
Description	CharacterString	-	O	-
Status_Flags	BACnetStatusFlags	{FALSE, FALSE, FALSE, FALSE}	R	R
Event_State	BACnetEventState	STATE_NORMAL (0)	R	R
Reliability	BACnetReliability	NO_FAULT_DETECTED (0)	O	R
Out_Of_Service	BOOLEAN	FALSE	R	R
Update_Interval	Unsigned	-	O	-
Units	BACnetEngineeringUnits	*Configurable through BACnet and Config Tool*	R	R
Min_Pres_Value	REAL	-	O	-
Max_Pres_Value	REAL	-	O	-
Resolution	REAL	-	O	-
COV_Increment	REAL	0	O	R
Time_Delay	Unsigned	-	O	R*
Notification_Class	Unsigned	-	O	R*
High_Limit	REAL	-	O	R*
Low_Limit	REAL	-	O	R*
Deadband	REAL	-	O	R*
Limit_Enable	BACnetLimitEnable	-	O	R*
Event_Enable	BACnetEventTransitionBits	-	O	R*
Acked_Transitions	BACnetEventTransitionBits	-	O	R*
Notify_Type	BACnetNotifyType	-	O	R*
Event_Time_Stamps	BACnetArray[N] of BACnetTimeStamp	-	O	R*
Profile_Name	CharacterString	-	O	-

* Only available when specific object has a Notification Class configured

© HMS Industrial Networks S.L.U - All rights reserved
This information is subject to change without notice

5.2.5 Binary Input Object Type

Property Identifier	Property Datatype	Value	ASHRAE	IBOX
Object_Identifier	BACnetObjectIdentifier	(Binary Input, 0)	R	R
Object_Name	CharacterString	*Configurable through BACnet and Config Tool*	R	R
Object_Type	BACnetObjectType	BINARY_INPUT (3)	R	R
Present_Value	BACnetBinaryPV	INACTIVE (0) / ACTIVE (1)	R	R
Description	CharacterString	-	O	-
Device_Type	CharacterString	-	O	-
Status_Flags	BACnetStatusFlags	{FALSE, FALSE/TRUE, FALSE, FALSE}	R	R
Event_State	BACnetEventState	STATE_NORMAL (0)	R	R
Reliability	BACnetReliability	NO_FAULT_DETECTED (0), UNRELIABLE_OTHER (7)	O	R
Out_Of_Service	BOOLEAN	FALSE	R	R
Polarity	BACnetPolarity	NORMAL (0)	R	R
Inactive_Text	CharacterString	*Configurable through BACnet and Config Tool*	O	R
Active_Text	CharacterString	*Configurable through BACnet and Config Tool*	O	R
Change_Of_State_Time	BACnetDatetime	-	O	R
Change_Of_State_Count	Unsigned	-	O	R
Time_Of_State_Count_Reset	BACnetDatetime	-	O	R
Elapsed_Active_Time	Unsigned	-	O	R
Time_Of_Active_Time_Reset	BACnetDatetime	-	O	R
Time_Delay	Unsigned	-	O	R*
Notification_Class	Unsigned	-	O	R*
Alarm_Value	BACnetBinaryPV	-	O	R*
Event_Enable	BACnetEventTransitionBits	-	O	R*
Acked_Transitions	BACnetEventTransitionBits	-	O	R*
Notify_Type	BACnetNotifyType	-	O	R*
Event_Time_Stamps	BACnetArray[N] of BACnetTimeStamp	-	O	R*
Profile_Name	CharacterString	-	O	-

* Only available when specific object has a Notification Class configured

© HMS Industrial Networks S.L.U - All rights reserved
This information is subject to change without notice

5.2.6 Binary Output Object Type

Property Identifier	Property Datatype	Value	ASHRAE	IBOX
Object_Identifier	BACnetObjectIdentifier	(Binary Output, 0)	R	R
Object_Name	CharacterString	*Configurable through BACnet and Config Tool*	R	R
Object_Type	BACnetObjectType	BINARY_OUTPUT (4)	R	R
Present_Value	BACnetBinaryPV	INACTIVE (0) / ACTIVE (1)	W	W
Description	CharacterString	-	O	-
Device_Type	CharacterString	-	O	-
Status_Flags	BACnetStatusFlags	{FALSE, FALSE, FALSE, FALSE}	R	R
Event_State	BACnetEventState	STATE_NORMAL (0)	R	R
Reliability	BACnetReliability	NO_FAULT_DETECTED (0)	O	R
Out_Of_Service	BOOLEAN	FALSE	R	R
Polarity	BACnetPolarity	NORMAL (0)	R	R
Inactive_Text	CharacterString	*Configurable through BACnet and Config Tool*	O	R
Active_Text	CharacterString	*Configurable through BACnet and Config Tool*	O	R
Change_Of_State_Time	BACnetDatetime	-	O	R
Change_Of_State_Count	Unsigned	-	O	R
Time_Of_State_Count_Reset	BACnetDatetime	-	O	R
Elapsed_Active_Time	Unsigned	-	O	R
Time_Of_Active_Time_Reset	BACnetDatetime	-	O	R
Minimum_Off_Time	Unsigned32	-	O	-
Minimum_On_Time	Unsigned32	-	O	-
Priority_Array	BACnetPriorityArray	BACnetPriorityArray	R	R
Relinquish_Default	BACnetBinaryPV	INACTIVE (0)	R	R
Time_Delay	Unsigned	-	O	R*
Notification_Class	Unsigned	-	O	R*
Feedback_Value	BACnetBinaryPV	-	O	W
Event_Enable	BACnetEventTransitionBits	-	O	R*
Acked_Transitions	BACnetEventTransitionBits	-	O	R*
Notify_Type	BACnetNotifyType	-	O	R*
Event_Time_Stamps	BACnetArray[N] of BACnetTimeStamp	-	O	R*
Profile_Name	CharacterString	-	O	-

* Only available when specific object has a Notification Class configured

© HMS Industrial Networks S.L.U - All rights reserved
This information is subject to change without notice

5.2.7 Binary Value Object Type

Property Identifier	Property Datatype	Value	ASHRAE	IBOX
Object_Identifier	BACnetObjectIdentifier	(Binary Value, 0)	R	R
Object_Name	CharacterString	*Configurable through BACnet and Config Tool*	R	R
Object_Type	BACnetObjectType	BINARY_VALUE (5)	R	R
Present_Value	BACnetBinaryPV	INACTIVE (0) / ACTIVE (1)	W	W
Description	CharacterString	-	O	-
Status_Flags	BACnetStatusFlags	{FALSE, FALSE, FALSE, FALSE}	R	R
Event_State	BACnetEventState	STATE_NORMAL (0)	R	R
Reliability	BACnetReliability	NO_FAULT_DETECTED (0)	O	R
Out_Of_Service	BOOLEAN	FALSE	R	R
Inactive_Text	CharacterString	*Configurable through BACnet and Config Tool*	O	R
Active_Text	CharacterString	*Configurable through BACnet and Config Tool*	O	R
Change_Of_State_Time	BACnetDatetime	-	O	R
Change_Of_State_Count	Unsigned	-	O	R
Time_Of_State_Count_Reset	BACnetDatetime	-	O	R
Elapsed_Active_Time	Unsigned	-	O	R
Time_Of_Active_Time_Reset	BACnetDatetime	-	O	R
Minimum_Off_Time	Unsigned32	-	O	-
Minimum_On_Time	Unsigned32	-	O	-
Priority_Array	BACnetPriorityArray	BACnetPriorityArray	R	R
Relinquish_Default	BACnetBinaryPV	INACTIVE (0)	R	R
Time_Delay	Unsigned	-	O	R*
Notification_Class	Unsigned	-	O	R*
Alarm_Value	BACnetBinaryPV	-	O	R*
Event_Enable	BACnetEventTransitionBits	-	O	R*
Acked_Transitions	BACnetEventTransitionBits	-	O	R*
Notify_Type	BACnetNotifyType	-	O	R*
Event_Time_Stamps	BACnetArray[N] of BACnetTimeStamp	-	O	R*
Profile_Name	CharacterString	-	O	-

* Only available when specific object has a Notification Class configured

© HMS Industrial Networks S.L.U - All rights reserved
This information is subject to change without notice

5.2.8 Multistate Input Object Type

Property Identifier	Property Datatype	Value	ASHRAE	IBOX
Object_Identifier	BACnetObjectIdentifier	(Multi-state Input, 0)	R	R
Object_Name	CharacterString	*Configurable through BACnet and Config Tool*	R	R
Object_Type	BACnetObjectType	MULTISTATE_INPUT (13)	R	R
Present_Value	Unsigned	x	R	R
Description	CharacterString	-	O	-
Device_Type	CharacterString	-	O	-
Status_Flags	BACnetStatusFlags	{FALSE, FALSE/TRUE, FALSE, FALSE}	R	R
Event_State	BACnetEventState	STATE_NORMAL (0)	R	R
Reliability	BACnetReliability	NO_FAULT_DETECTED (0), UNRELIABLE_OTHER (7)	O	R
Out_Of_Service	BOOLEAN	FALSE	R	R
Number_Of_States	Unsigned	*Configurable through BACnet and Config Tool*	R	R
State_Text	BACnetArray[N] of CharacterString	-	O	R
Time_Delay	Unsigned	-	O	R*
Notification_Class	Unsigned	-	O	R*
Alarm_Values	List of Unsigned	-	O	R*
Fault_Values	List of Unsigned	-	O	R*
Event_Enable	BACnetEventTransitionBits	-	O	R*
Acked_Transitions	BACnetEventTransitionBits	-	O	R*
Notify_Type	BACnetNotifyType	-	O	R*
Event_Time_Stamps	BACnetArray[N] of BACnetTimeStamp	-	O	R*
Profile_Name	CharacterString	-	O	-

* Only available when specific object has a Notification Class configured

© HMS Industrial Networks S.L.U - All rights reserved
This information is subject to change without notice

5.2.9 Multistate Output Object Type

Property Identifier	Property Datatype	Value	ASHRAE	IBOX
Object_Identifier	BACnetObjectIdentifier	(Multi-state Output, 0)	R	R
Object_Name	CharacterString	*Configurable through BACnet and Config Tool*	R	R
Object_Type	BACnetObjectType	MULTISTATE_OUTPUT (14)	R	R
Present_Value	Unsigned	x	W	W
Description	CharacterString	-	O	-
Device_Type	CharacterString	-	O	-
Status_Flags	BACnetStatusFlags	{FALSE, FALSE, FALSE, FALSE}	R	R
Event_State	BACnetEventState	STATE_NORMAL (0)	R	R
Reliability	BACnetReliability	NO_FAULT_DETECTED (0)	O	R
Out_Of_Service	BOOLEAN	FALSE	R	R
Number_Of_States	Unsigned	*Configurable through BACnet and Config Tool*	R	R
State_Text	BACnetArray[N] of CharacterString		O	R
Priority_Array	BACnetPriorityArray	BACnetPriorityArray	R	R
Relinquish_Default	Unsigned	1	R	R
Time_Delay	Unsigned	-	O	R*
Notification_Class	Unsigned	-	O	R*
Feedback_Value	Unsigned	-	O	W
Event_Enable	BACnetEventTransitionBits	-	O	R*
Acked_Transitions	BACnetEventTransitionBits	-	O	R*
Notify_Type	BACnetNotifyType	-	O	R*
Event_Time_Stamps	BACnetArray[N] of BACnetTimeStamp	-	O	R*
Profile_Name	CharacterString	-	O	-

* Only available when specific object has a Notification Class configured

© HMS Industrial Networks S.L.U - All rights reserved
This information is subject to change without notice

5.2.10 Multistate Value Object Type

Property Identifier	Property Datatype	Value	ASHRAE	IBOX
Object_Identifier	BACnetObjectIdentifier	(Multi-state Output, 0)	R	R
Object_Name	CharacterString	*Configurable through BACnet and Config Tool*	R	R
Object_Type	BACnetObjectType	MULTISTATE_VALUE (19)	R	R
Present_Value	Unsigned	x	W	W
Description	CharacterString	-	O	-
Status_Flags	BACnetStatusFlags	{FALSE, FALSE, FALSE, FALSE}	R	R
Event_State	BACnetEventState	STATE_NORMAL (0)	R	R
Reliability	BACnetReliability	NO_FAULT_DETECTED (0)	O	R
Out_Of_Service	BOOLEAN	FALSE	R	R
Number_Of_States	Unsigned	*Configurable through BACnet and Config Tool*	R	R
State_Text	BACnetArray[N] of CharacterString		O	R
Priority_Array	BACnetPriorityArray	-	R	R
Relinquish_Default	Unsigned	-	R	R
Time_Delay	Unsigned	-	O	R*
Notification_Class	Unsigned	-	O	R*
Alarm_Values	Unsigned	-	O	R*
Fault_Values	Unsigned		O	R*
Event_Enable	BACnetEventTransitionBits	-	O	R*
Acked_Transitions	BACnetEventTransitionBits	-	O	R*
Notify_Type	BACnetNotifyType	-	O	R*
Event_Time_Stamps	BACnetArray[N] of BACnetTimeStamp	-	O	R*
Profile_Name	CharacterString	-	O	-

* Only available when specific object has a Notification Class configured

© HMS Industrial Networks S.L.U - All rights reserved
This information is subject to change without notice

5.2.11 Calendar Object Type

Property Identifier	Property Datatype	Value	ASHRAE	IBOX
Object_Identifier	BACnetObjectIdentifier	(Calendar, 6)	R	R
Object_Name	CharacterString	*Configurable through BACnet and Config Tool*	R	R
Object_Type	BACnetObjectType	CALENDAR (6)	R	R
Description	CharacterString	-	O	-
Present_Value	BOOLEAN	-	R	R
Date_List	BACnetLIST of BACnetCalendarEntry	-	R	W
Profile_Name	BACnetARRAY[N] of BACnetPropertyIdentifier	-	O	-

© HMS Industrial Networks S.L.U - All rights reserved
This information is subject to change without notice

5.2.12 Schedule Object Type

Property Identifier	Property Datatype	Value	ASHRAE	IBOX
Object_Identifier	BACnetObjectIdentifier	(Schedule, 17)	R	R
Object_Name	CharacterString	*Configurable through BACnet and Config Tool*	R	R
Object_Type	BACnetObjectType	SCHEDULE (17)	R	R
Present_Value	Any	-	R	R
Description	CharacterString	-	O	-
Effective_Period	BACnetDateRange	-	R	W
Weekly_Schedule	BACnetARRAY[7] of BACnetDailySchedule	-	R	W
Exception_Schedule	BACnetARRAY[N] of BACnetSpecialEvent	-	R	W
Schedule_Default	Any	-	R	W
List_Of_Object_Property_References	BACnetLIST of BACnetDeviceObjectPropertyReference	-	R	R
Priority_For_Writing	Unsigned(1..16)	-	R	W
Status_Flags	BACnetStatusFlags	-	R	R
Reliability	BACnetReliability	-	R	R
Out_Of_Service	BOOLEAN	-	R	R
Event_Detection_Enable	BOOLEAN	-	O	-
Notification_Class	Unsigned	-	O	-
Event_Enable	BACnetEventTransitionBits	-	O	-
Event_State	BACnetEventState	-	O	-
Acked_Transitions	BACnetEventTransitionBits	-	O	-
Notify_Type	BACnetNotifyType	-	O	-
Event_Time_Stamps	BACnetARRAY[3] of BACnetTimeStamp	-	O	-
Event_Message_Texts	BACnetARRAY[3] of CharacterString	-	O	-
Event_Message_Texts_Config	BACnetARRAY[3] of CharacterString	-	O	-
Reliability_Evaluation_Inhibit	BOOLEAN	-	O	-
Profile_Name	CharacterString	-	O	-

© HMS Industrial Networks S.L.U - All rights reserved
This information is subject to change without notice

5.2.13 Notification Class Object Type

Property Identifier	Property Datatype	Value	ASHRAE	IBOX
Object_Identifier	BACnetObjectIdentifier	(Notification_Class, 15)	R	R
Object_Name	CharacterString	*Configurable through BACnet and Config Tool*	R	R
Object_Type	BACnetObjectType	NOTIFICATION_CLASS (15)	R	R
Description	CharacterString	-	O	-
Notification_Class	Unsigned	-	R	R
Priority	BACnetARRAY[3] of Unsigned	-	R	R
Ack_Required	BACnetEventTransitionBits	-	R	R
Recipient_List	BACnetLIST of BACnetDestination	-	R	R
Profile_Name	CharacterString	-	O	-

© HMS Industrial Networks S.L.U - All rights reserved
This information is subject to change without notice

5.2.14 Trend Log Object Type

Property Identifier	Property Datatype	Value	ASHRAE	IBOX
Object_Identifier	BACnetObjectIdentifier	(Trend_Log, 20)	R	R
Object_Name	CharacterString	*Configurable through BACnet and Config Tool*	R	R
Object_Type	BACnetObjectType	TREND_LOG (20)	R	R
Description	CharacterString	-	O	-
Enable	BOOLEAN		R	W
Start_Time	BACnetDateTime		O	W
Stop_Time	BACnetDateTime		O	W
Log_DeviceObjectProperty	BACnetDeviceObject PropertyReference		O	-
Log_Interval	Unsigned		O	-
COV_Resubscription_Interval	Unsigned		O	-
Client_COV_Increment	BACnetClientCOV		O	-
Stop_When_Full	BOOLEAN		R	R
Buffer_Size	Unsigned		R	R
Log_Buffer	List of BACnetLogRecord		R	R
Record_Count	Unsigned		R	W
Total_Record_Count	Unsigned		R	R
Notification_Threshold	Unsigned		O	R*
Records_Since_Notification	Unsigned		O	R*
Last_Notify_Record	Unsigned		O	R*
Event_State	BACnetEventState		R	R
Notification_Class	Unsigned		O	R*
Event_Enable	BACnetEventTransitionBits		O	R*
Acked_Transitions	BACnetEventTransitionBits		O	R*
Notify_Type	BACnetNotifyType		O	R*
Event_Time_Stamps	BACnetARRAY[3] of BACnetTimeStamp		O	R*
EventMessageTexts	BACnetARRAY[3] of CharacterString		O	R*
Profile_Name	CharacterString		O	-
Logging_Type	BACnetLoggingType		R	R
Status_Flags	BACnetStatusFlags		R	R

* Only available when specific object has a Notification Class configured

© HMS Industrial Networks S.L.U - All rights reserved
This information is subject to change without notice

5.2.15 Trend Log Multiple Object Type

Property Identifier	Property Datatype	Value	ASHRAE	IBOX
Object_Identifier	BACnetObjectIdentifier	(Trend_Log_Multiple, 27)	R	R
Object_Name	CharacterString	*Configurable through BACnet and Config Tool*	R	R
Object_Type	BACnetObjectType	TREND_LOG_MULTIPLE (27)	R	R
Description	CharacterString	-	O	-
Enable	BOOLEAN		R	W
Start_Time	BACnetDateTime		O	W
Stop_Time	BACnetDateTime		O	W
Log_DeviceObjectProperty	BACnetARRAY[10] of BACnetDeviceObject PropertyReference		O	R
Log_Interval	Unsigned		O	-
COV_Resubscription_Interval	Unsigned		O	-
Client_COV_Increment	BACnetClientCOV		O	-
Stop_When_Full	BOOLEAN		R	R
Buffer_Size	Unsigned		R	R
Log_Buffer	List of BACnetLogRecord		R	R
Record_Count	Unsigned		R	W
Total_Record_Count	Unsigned		R	R
Notification_Threshold	Unsigned		O	R*
Records_Since_Notification	Unsigned		O	R*
Last_Notify_Record	Unsigned		O	R*
Event_State	BACnetEventState		R	R
Notification_Class	Unsigned		O	R*
Event_Enable	BACnetEventTransitionBits		O	R*
Acked_Transitions	BACnetEventTransitionBits		O	R*
Notify_Type	BACnetNotifyType		O	R*
Event_Time_Stamps	BACnetARRAY[3] of BACnetTimeStamp		O	R*
EventMessageTexts	BACnetARRAY[3] of CharacterString		O	R*
Profile_Name	CharacterString		O	-
Logging_Type	BACnetLoggingType		R	R
Status_Flags	BACnetStatusFlags		R	R

* Only available when specific object has a Notification Class configured

© HMS Industrial Networks S.L.U - All rights reserved
This information is subject to change without notice

6 Connections

Find below information regarding the Intesis connections available.

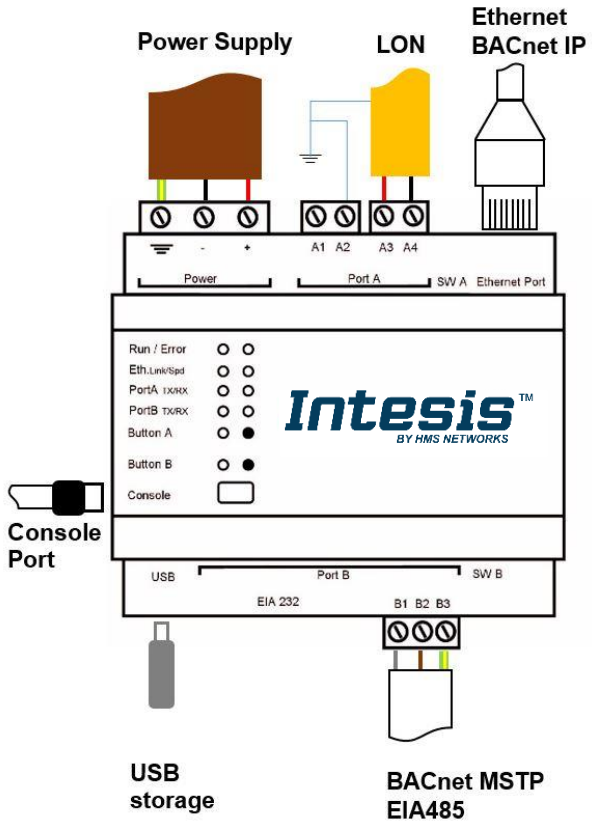

Power Supply
Must use NEC Class 2 or Limited Power Source (LPS) and SELV rated power supply.

If using DC power supply:
Respect polarity applied of terminals (+) and (-). Be sure the voltage applied is within the range admitted (check table below). The power supply can be connected to earth but only through the negative terminal, never through the positive terminal.

If using AC power supply:
Make sure the voltage applied is of the value admitted (24 Vac). Do not connect any of the terminals of the AC power supply to earth, and make sure the same power supply is not supplying any other device.

Ethernet / BACnet IP
Connect the cable coming from the IP network to the connector ETH of the gateway. Use an Ethernet CAT5 cable. If communicating through the LAN of the building, contact the network administrator and make sure traffic on the port used is allowed through all the LAN path (check the gateway user manual for more information). With factory settings, after powering up the gateway, DHCP will be enabled for 30 seconds. After that time, if no IP is provided by a DHCP server, the default IP 192.168.100.246 will be set.

PortA / LON
Connect the LON bus to connectors A3 (A), A4 (B) of gateway's PortA. Connect A2 and cable shield to installation earth.

PortB / BACnet MSTP
Connect the EIA485 bus to connectors B1 (-), B2 (+) and B3 (SNGD) of gateway's PortB. Respect the polarity.

Note for PortB; *Remember the characteristics of the standard EIA485 bus: maximum distance of 1200 meters, maximum 32 devices connected to the bus, and in each end of the bus it must be a termination resistor of 120 Ω. The gateway has an internal bus biasing circuit that incorporates the termination resistor. If you install the gateway in one of the ends of the bus, then do not install an additional termination resistor in that end.*

Console Port
Connect a mini-type B USB cable from your computer to the gateway to allow communication between the Configuration Software and the gateway. Remember that Ethernet connection is also allowed. Check the user manual for more information.

USB
Connect a USB storage device (not a HDD) if required. Check the user manual for more information.

Ensure proper space for all connectors when mounted (see section 9).

© HMS Industrial Networks S.L.U - All rights reserved
This information is subject to change without notice

6.1 *Powering the device*

A power supply working with any of the voltage range allowed is needed (check section 8). Once connected the RUN led (Figure above) will turn on.

WARNING! In order to avoid earth loops that can damage the gateway and/or any other equipment connected to it, we strongly recommend:

- The use of DC power supplies, floating or with the negative terminal connected to earth. **Never use a DC power supply with the positive terminal connected to earth**.
- The use of AC power supplies only if they are floating and not powering any other device.

6.2 *Connection to BACnet*

6.2.1 BACnet IP

Connect the communication cable coming from the network hub or switch to the ETH port (Figure above) of Intesis. The cable to be used shall be a straight Ethernet UTP/FTP CAT5 cable

In case there is no response from the BACnet devices to the frames sent by Intesis, check that they are operative and reachable from the network connection used by Intesis. Check the Intesis Ethernet interface sending *Pings* to its IP address using a PC connected to the same Ethernet network.

Check as well with the network admin that there are no limitations regarding UDP communication or ports blocked.

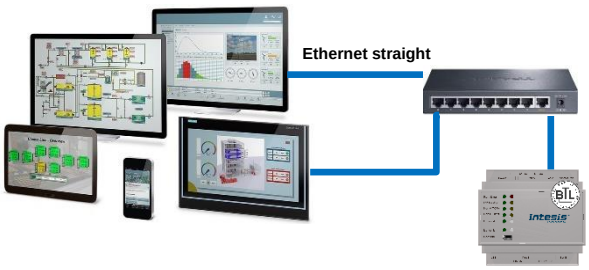

BACnet IP connection using switch/hub and straight cable

BACnet IP connection without switch/hub and crossed cable

6.2.2 BACnet MSTP

Connect the EIA485 bus to connectors A3 (+), A4 (-) and A1 or A2 (SNGD) of gateway's PortA. Respect the polarity.

Remember the characteristics of the standard EIA485 bus: maximum distance of 1200 meters, maximum 32 devices connected to the bus, and in each end of the bus it must be a termination resistor of 120 Ω. The gateway has an internal bus biasing circuit that incorporates the termination resistor. If you install the gateway in one of the ends of the bus, then do not install an additional termination resistor in that end.

© HMS Industrial Networks S.L.U - All rights reserved
This information is subject to change without notice

6.3 *Connection to LonWorks*

6.3.1 LonWorks FT-10

Connect the communication cable coming from the LON network to the port marked as LON of Intesis. Connect the FT-10 bus to connectors A3 (A), A4 (B) and connect A2 and cable shield to installation earth. Respect the polarity.

6.4 *Connection to the configuration tool*

This action allows the user to have access to configuration and monitoring of the device (more information can be found in the configuration tool User Manual). Two methods to connect to the PC can be used:

- **Ethernet:** Using the Ethernet port of Intesis.
- **USB:** Using the console port of Intesis, connect a USB cable from the console port to the PC.

© HMS Industrial Networks S.L.U - All rights reserved
This information is subject to change without notice

7 Set-up process and troubleshooting

7.1 *Pre-requisites*

It is necessary to have a BACnet IP client or MSTP device operative and well connected to the corresponding BACnet port of Intesis and a LonWorks device(s) connected to their corresponding ports as well.

Connectors, connection cables, PC to use the configuration tool and other auxiliary material, if needed, are not supplied by HMS Industrial Networks S.L.U for this standard integration.

Items supplied by HMS Networks for this integration are:

- Intesis gateway.
- Link to download the configuration tool.
- Product documentation.

7.2 *Intesis MAPS. Configuration & monitoring tool for Intesis BACnet series*

7.2.1 Introduction

Intesis MAPS is a Windows® compatible software developed specifically to monitor and configure Intesis BACnet series.

The installation procedure and main functions are explained in the *Intesis MAPS User Manual*. This document can be downloaded from the link indicated in the installation sheet supplied with the Intesis device or in the product website at www.intesis.com

In this section, only the specific case of LON to BACnet systems will be covered.

Please check the Intesis MAPS user manual for specific information about the different parameters and how to configure them.

7.2.2 Connection

To configure the Intesis connection parameters press on the ***Connection*** button in the *menu bar*.

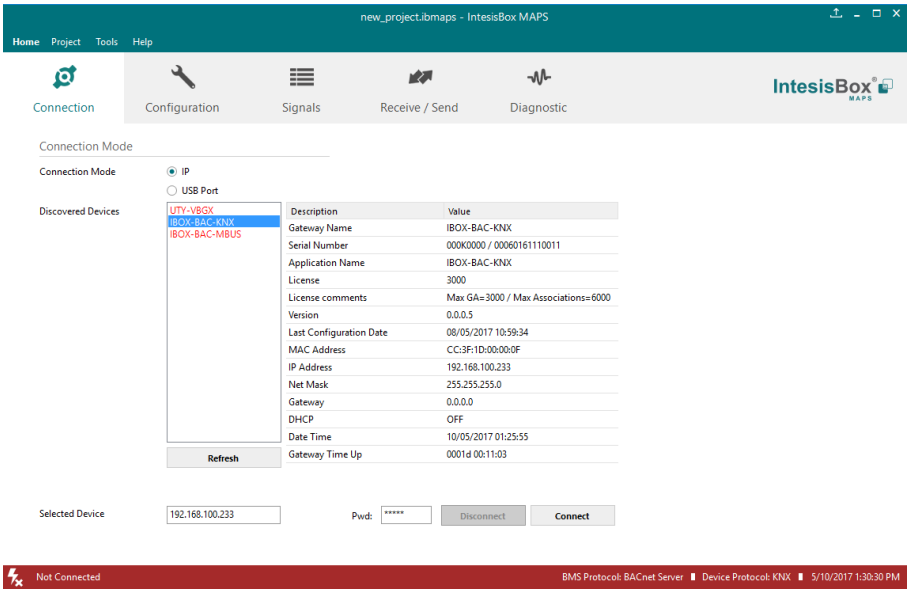

Figure 7.1 MAPS connection

© HMS Industrial Networks S.L.U - All rights reserved
This information is subject to change without notice

7.2.3 Configuration tab

Select the ***Configuration*** tab to configure the connection parameters. Three subsets of information are shown in this window: General (Gateway general parameters), BACnet Server (BACnet interface configuration) and LON (LonWorks interface parameters).

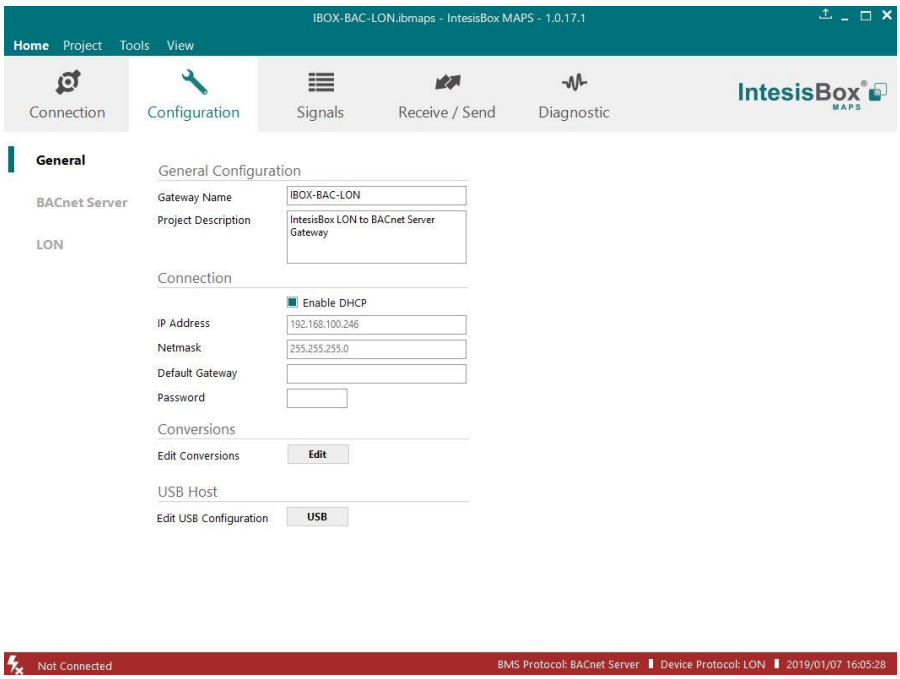

Figure 7.2 Intesis MAPS configuration tab

7.2.4 Signals

All available objects, Object Instances, its corresponding LON network variable and other main parmaters are listed in the signals tab. More information on each parameter and how to configure it can be found in the Intesis MAPS user manual.

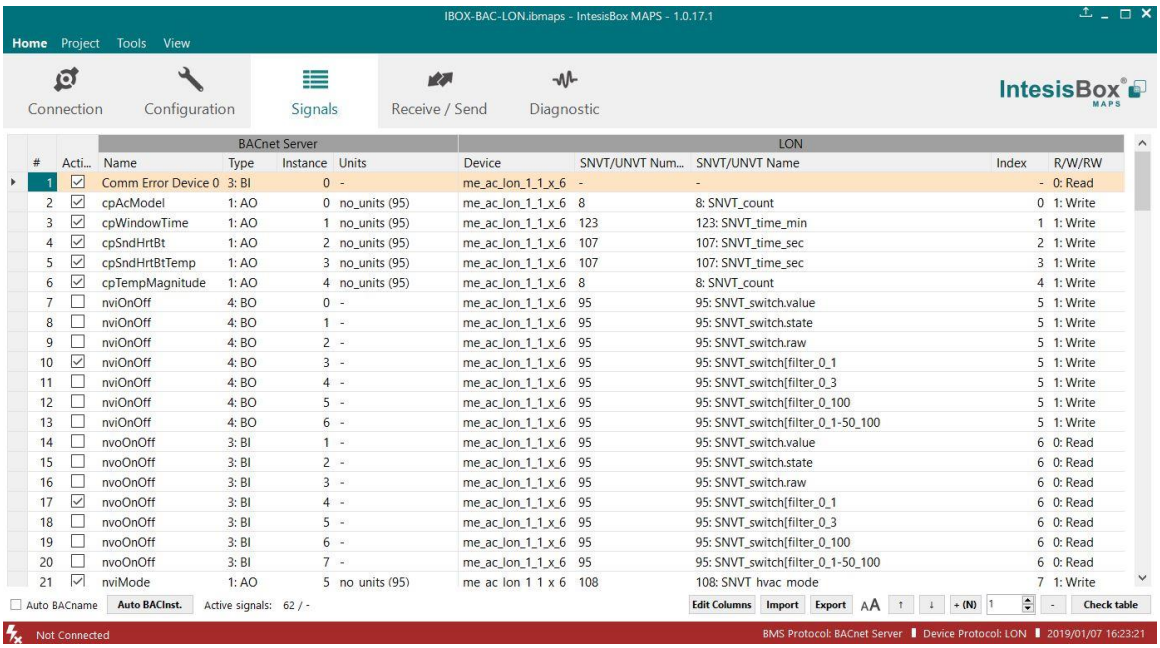

#	Acti...	BACnet Server Name	Type	Instance	Units	LON Device	SNVT/UNVT Num...	SNVT/UNVT Name	Index	R/W/RW
1	☑	Comm Error Device 0	3: BI	0	-	me_ac_lon_1_1_x_6	-	-	-	0: Read
2	☑	cpAcModel	1: AO	0	no_units (95)	me_ac_lon_1_1_x_6	8	8: SNVT_count	0	1: Write
3	☑	cpWindowTime	1: AO	1	no_units (95)	me_ac_lon_1_1_x_6	123	123: SNVT_time_min	1	1: Write
4	☑	cpSndHrtBt	1: AO	2	no_units (95)	me_ac_lon_1_1_x_6	107	107: SNVT_time_sec	2	1: Write
5	☑	cpSndHrtBtTemp	1: AO	3	no_units (95)	me_ac_lon_1_1_x_6	107	107: SNVT_time_sec	3	1: Write
6	☑	cpTempMagnitude	1: AO	4	no_units (95)	me_ac_lon_1_1_x_6	8	8: SNVT_count	4	1: Write
7	☐	nviOnOff	4: BO	0	-	me_ac_lon_1_1_x_6	95	95: SNVT_switch.value	5	1: Write
8	☐	nviOnOff	4: BO	1	-	me_ac_lon_1_1_x_6	95	95: SNVT_switch.state	5	1: Write
9	☐	nviOnOff	4: BO	2	-	me_ac_lon_1_1_x_6	95	95: SNVT_switch.raw	5	1: Write
10	☑	nviOnOff	4: BO	3	-	me_ac_lon_1_1_x_6	95	95: SNVT_switch[filter_0_1	5	1: Write
11	☐	nviOnOff	4: BO	4	-	me_ac_lon_1_1_x_6	95	95: SNVT_switch[filter_0_3	5	1: Write
12	☐	nviOnOff	4: BO	5	-	me_ac_lon_1_1_x_6	95	95: SNVT_switch[filter_0_100	5	1: Write
13	☐	nviOnOff	4: BO	6	-	me_ac_lon_1_1_x_6	95	95: SNVT_switch[filter_0_1-50_100	5	1: Write
14	☐	nvoOnOff	3: BI	1	-	me_ac_lon_1_1_x_6	95	95: SNVT_switch.value	6	0: Read
15	☐	nvoOnOff	3: BI	2	-	me_ac_lon_1_1_x_6	95	95: SNVT_switch.state	6	0: Read
16	☐	nvoOnOff	3: BI	3	-	me_ac_lon_1_1_x_6	95	95: SNVT_switch.raw	6	0: Read
17	☑	nvoOnOff	3: BI	4	-	me_ac_lon_1_1_x_6	95	95: SNVT_switch[filter_0_1	6	0: Read
18	☐	nvoOnOff	3: BI	5	-	me_ac_lon_1_1_x_6	95	95: SNVT_switch[filter_0_3	6	0: Read
19	☐	nvoOnOff	3: BI	6	-	me_ac_lon_1_1_x_6	95	95: SNVT_switch[filter_0_100	6	0: Read
20	☐	nvoOnOff	3: BI	7	-	me_ac_lon_1_1_x_6	95	95: SNVT_switch[filter_0_1-50_100	6	0: Read
21	☑	nviMode	1: AO	5	no_units (95)	me_ac_lon_1_1_x_6	108	108: SNVT_hvac_mode	7	1: Write

Figure 7.3 Intesis MAPS Signals tab

© HMS Industrial Networks S.L.U - All rights reserved
This information is subject to change without notice

7.2.5 Sending the configuration to Intesis

When the configuration is finished, follow the next steps.

1.- Click on ***Save*** button to save the project to the project folder on your hard disk (more information in Intesis MAPS User Manual).

2.- You will be prompted to generate the configuration file to be sent to the gateway.

a.- If ***Yes*** is selected, the file containing the configuration for the gateway will be generated and saved also into the project folder.

b.- If ***NO*** is selected, remember that the binary file with the project needs to be generated before the Intesis starts to work as expected.

3.- Press the ***Send File*** button to send the binary file to the Intesis device. The process of file transmission can be monitored in the Intesis Communication Console window. Intesis will reboot automatically once the new configuration is loaded.

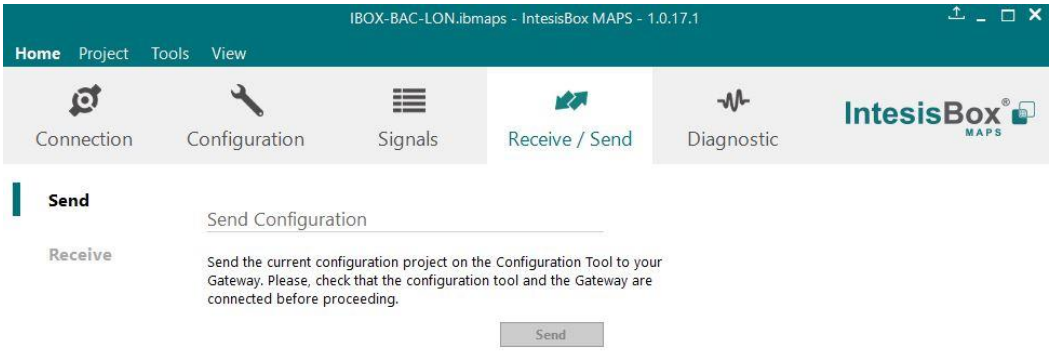

Figure 7.4 Intesis MAPS Receive/Send tab

After any configuration change, do not forget to send the configuration file to the Intesis using button Send File.

7.2.6 Diagnostic

To help integrators in the commissioning tasks and troubleshooting, the Configuration Tool offers some specific tools and viewers.

In order to start using the diagnostic tools, connection with the Gateway is required.

The Diagnostic section is composed by two main parts: Tools and Viewers.

- **Tools**
  Use the tools section to check the current hardware status of the box, log communications into compressed files to be sent to the support, change the Diagnostic panels' view or send commands to the gateway.

- **Viewers**
  In order to check the current status, viewer for the Internal and External protocols are available. It is also available a generic Console viewer for general information about communications and the gateway status and finally a Signals Viewer to simulate the BMS behavior or to check the current values in the system.

© HMS Industrial Networks S.L.U - All rights reserved
This information is subject to change without notice

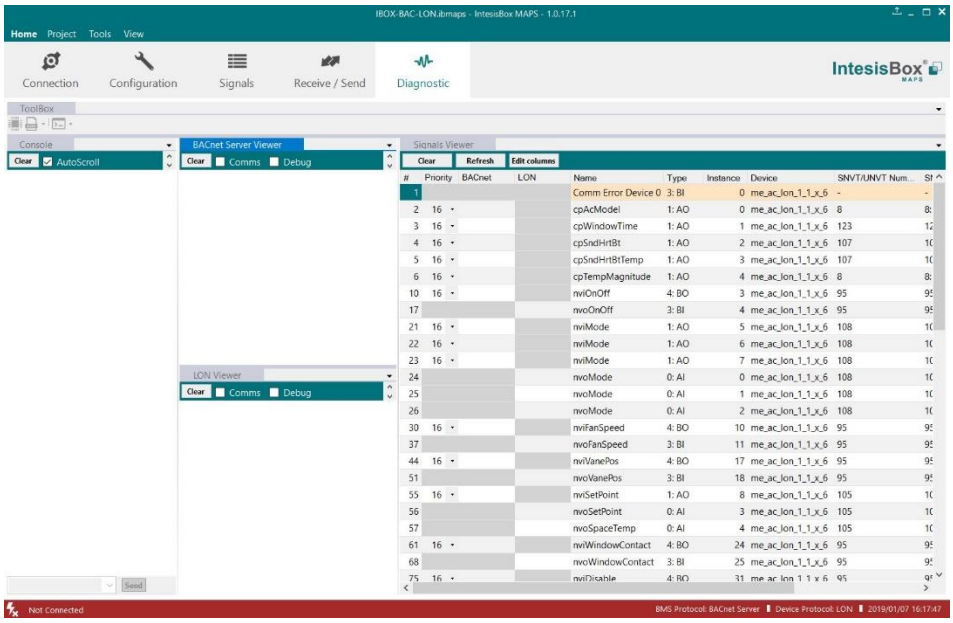

Figure 7.5 Diagnostic

More information about the Diagnostic section can be found in the Configuraion Tool manual.

© HMS Industrial Networks S.L.U - All rights reserved
This information is subject to change without notice

7.3 *Set-up procedure*

1. Install Intesis MAPS on your laptop, use the setup program supplied for this and follow the instructions given by the Installation wizard.

2. Install Intesis in the desired installation site. Installation can be on DIN rail or on a stable not vibrating surface (DIN rail mounted inside a metallic industrial cabinet connected to ground is recommended).

3. If using BACnet IP, connect the communication cable coming from the BACnet IP network to the port marked as Ethernet on Intesis (More details in section 6).

   If using BACnet MSTP, connect the communication cables coming from the BACnet MSTP network to the port marked as Port B on Intesis (More details in section 6).

4. If using, LonWorks FT-10, connect the communication cable coming from the LonWorks network to the port marked as Port A of Intesis (More details in section 6).

5. Power up Intesis. The supply voltage can be 9 to 30 Vdc or just 24 Vac. Take care of the polarity of the supply voltage applied.

   WARNING! In order to avoid earth loops that can damage Intesis and/or any other equipment connected to it, we strongly recommend:

   - The use of DC power supplies, floating or with the negative terminal connected to earth. **Never use a DC power supply with the positive terminal connected to earth**.
   - The use of AC power supplies only if they are floating and not powering any other device.

6. If you want to connect using IP, connect the Ethernet cable from the laptop PC to the port marked as Ethernet of Intesis (More details in section 6).

   If you want to connect using USB, connect the USB cable from the laptop PC to the port marked as Console of Intesis (More details in section 6).

7. Open Intesis MAPS, create a new project selecting a copy of the one named **INBACLON---0000**.

8. Modify the configuration as desired, save it and download the configuration file to Intesis as explained in the Intesis MAPS user manual.

9. Visit the Diagnostic section and check that there is communication activity, some TX frames and some other RX frames. This means that the communication with the BACnet master device and LON devices is OK. In case there is no communication activity between Intesis and the BACnet and/or LON devices, check that those are operative: check the Neuron ID or Subnet/Node, the communication cable used to connect all devices and any other communication parameter.

© HMS Industrial Networks S.L.U - All rights reserved
This information is subject to change without notice

8 Electrical & Mechanical Features

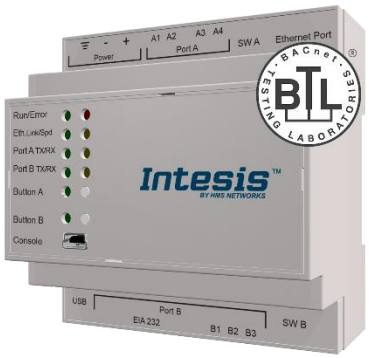

Housing	Plastic, type ABS (UL 94 V-0) Net dimensions (HxWxD): 90x88x56 mm Recommended space for installation (HxWxD): 130x100x100 mm Color: Light Grey. RAL 7035
Mounting	Wall DIN rail EN60715 TH35
Terminal Wiring (for power supply and low-voltage signals)	Per terminal: solid wires or stranded wires (twisted or with ferrule) One core: 0.2 mm^2… 2.5 mm^2 Two cores: 0.2 mm^2… 1.5 mm^2 Three cores: Not permitted
Power	1 x Plug-in screw terminal block (3 poles) 9 to 36VDC±10%, Max.: 140 mA 24VAC±10% 50-60 Hz, Max.: 127 mA Recommended: 24 VDC
Ethernet	1 x Ethernet 10/100 Mbps RJ45 2 x Ethernet LED: port link and activity
Port A	1 x LON TP/FT-10 (Plug-in screw terminal block orange 2 poles) A, B, Earth 1500 VDC isolation from other ports 1 x Plug-in screw terminal block green (2 poles) Reserved for future use
Switch A (SWA)	1 x DIP-Switch for PORT A configuration: Reserved for future use
PORT B	1 x Serial EIA232 (SUB-D9 male connector) Pinout from a DTE device 1500 VDC isolation from other ports (except PORT B: EIA485) 1 x Serial EIA485 Plug-in screw terminal block (3 poles) A, B, SGND (Reference ground or shield) 1500 VDC isolation from other ports (except PORT B: EIA232)
Switch B SWB)	1 x DIP-Switch for serial EIA485 configuration: Position 1: **ON:** 120 Ω termination active **Off:** 120 Ω termination inactive Position 2-3: **ON:** Polarization active **Off:** Polarization inactive

Battery	Size: Coin 20 mm x 3.2 mm Capacity: 3 V / 225 mAh Type: Manganese Dioxide Lithium
Console Port	Mini Type-B USB 2.0 compliant 1500 VDC isolation
USB port	Type-A USB 2.0 compliant Only for USB flash storage device *(USB pen drive)* Power consumption limited to 150mA *(HDD connection not allowed)*
Push Button	Button A: Check the user manual Button B: Check the user manual
Operation Temperature	0°C to +60°C
Operational Humidity	5 to 95%, no condensation
Protection	IP20 (IEC60529)
LED Indicators	10 x On board LED indicators 1 x Error LED 1 x Power LED 2 x Ethernet Link/Speed 2 x Port A TX/RX 2 x Port B TX/RX 1 x Button A indicator 1 x Button B indicator

© HMS Industrial Networks S.L.U - All rights reserved
This information is subject to change without notice

9 Dimensions

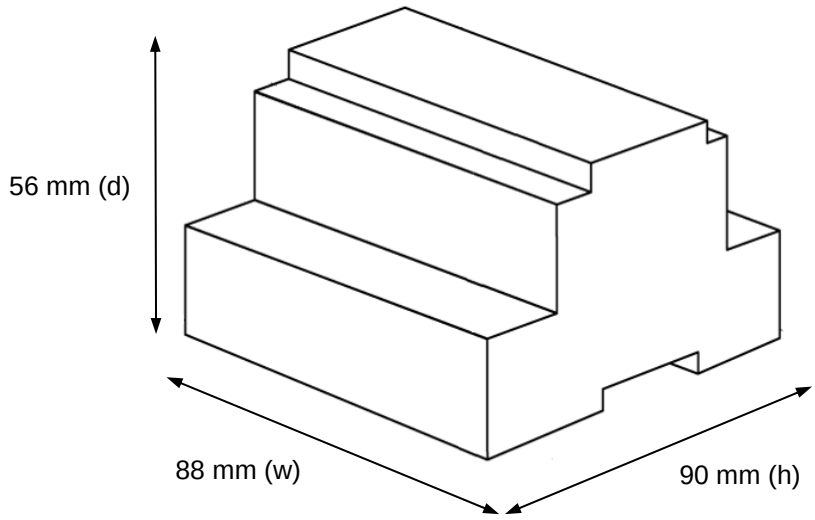

Recommended available space for its installation into a cabinet (wall or DIN rail mounting), with space enough for external connections

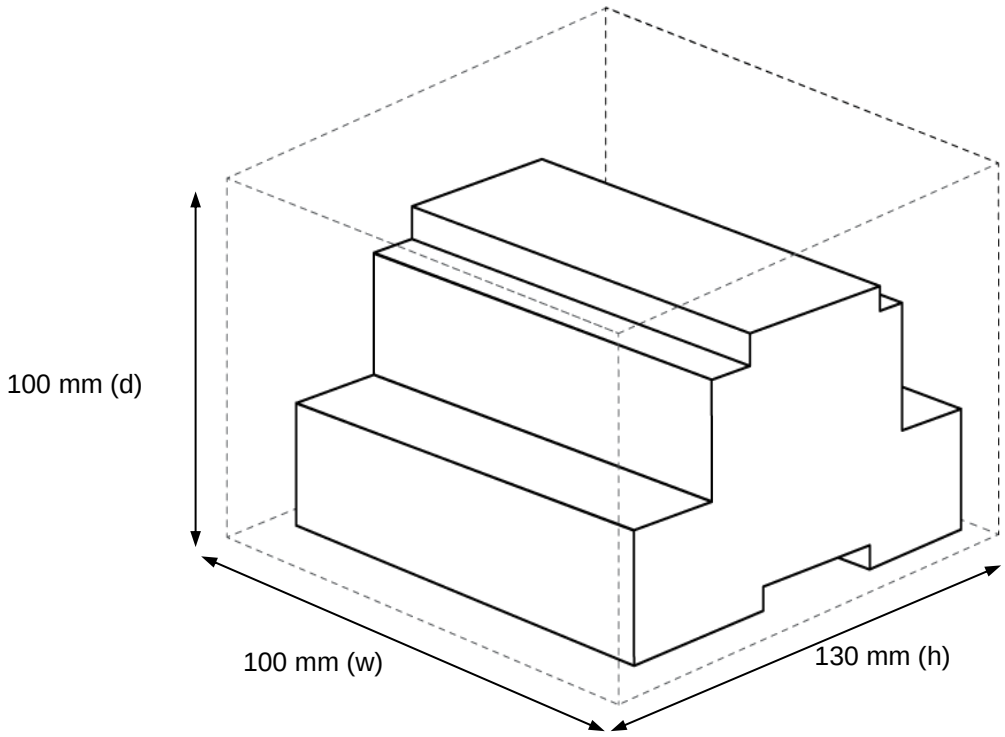

© HMS Industrial Networks S.L.U - All rights reserved
This information is subject to change without notice

10 Annex A – Quick reference for LonWorks setup parameters

This section provides a description on the LON parameters available using MAPS software tool.

10.1 *LON General Configuration*

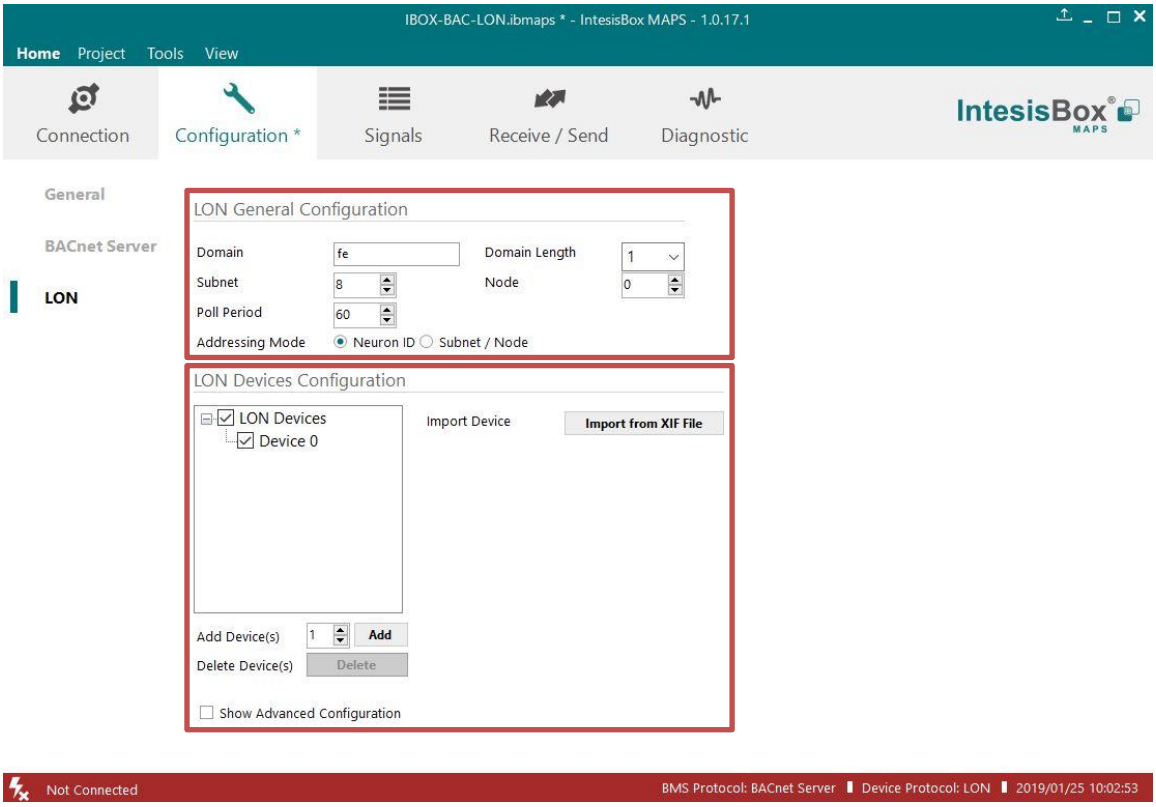

Figure 10.1 Intesis MAPS Configuration tab

- **Domain:** Enter the Domain number for Intesis into the LON network
- **Subnet:** Enter the Subnet number for Intesis into the LON network
- **Poll Period:** Device's polling cycle time period
- **Addressing Mode:** Enter the type of addressing to use by Intesis to access the device:
  - **Neuron Id:** If the devices are not commissioned. Enter the correct Neuron Id numbers of the devices.
  - **Subnet/Node.** If the devices are in an already commissioned LON network. Enter the correct Subnet and Node numbers of the devices (this must be supplied by the LON integrator that has commissioned the network).
- **Domain Length:** Enter the length in bytes of the Domain field
- **Node:** Enter the Node number for Intesis into the LON network

© HMS Industrial Networks S.L.U - All rights reserved
This information is subject to change without notice

10.2 *LON Devices Configuration*

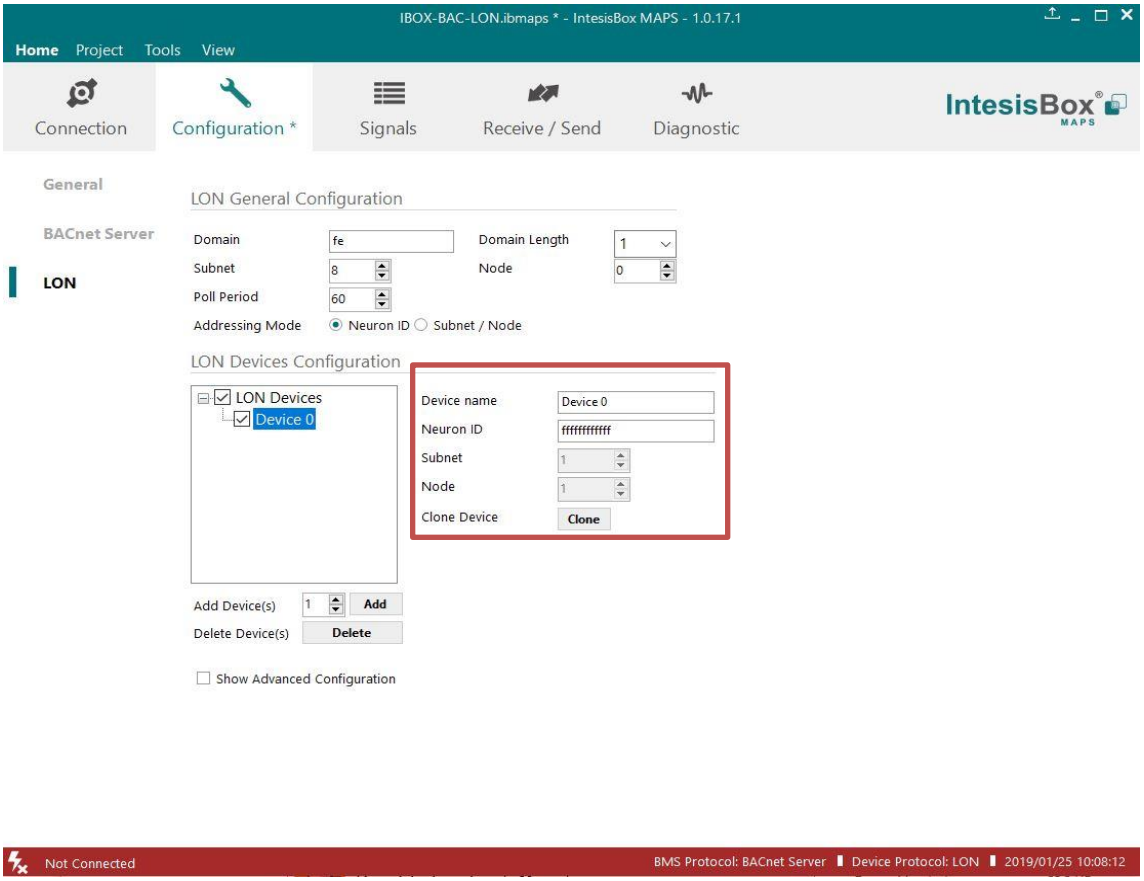

Figure 10.2 Intesis MAPS LON devices configuration

- **Import from XIF file:** A new dialog will open providing the possibility of importing a LonWorks XIF file to get access to all the variables of the related LON device. (see Figure 10.1).
- **Device name:** Name for the LON device.
- **Neuron ID:** Neuron ID of the LON device.
- **Subnet:** Subnet of the LON device.
- **Node:** Node number of the LON device.
- **Clone Device:** This button creates another device like the one selected.

© HMS Industrial Networks S.L.U - All rights reserved
This information is subject to change without notice

10.3 *User-defined Network Variable Types (UNVT) Configuration*

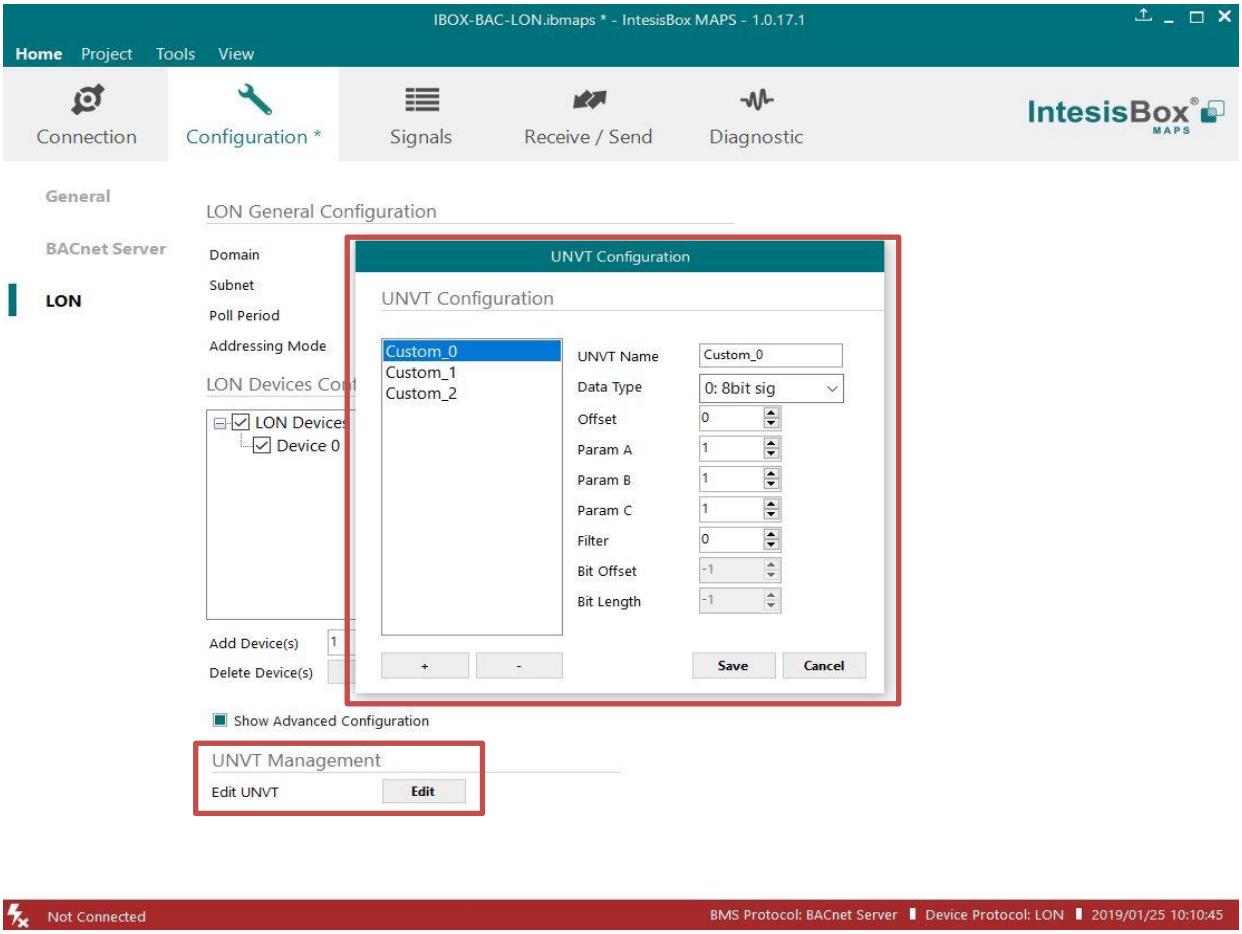

With this gateway it is possible to define User-defined Network Variable Type. To have access to the menu “Show Advanced Configuration” shall be enabled.

- **Edit UNVT:** Gives access to editing the UNVT’s

- **UNVT Name:** Type a name for this UNVT
- **Data Type:** Choose the type of data used.
- **Offset:** From which byte the UNVT is going to be read
- **Parameters A, B, C:** Parameters to apply follow the next formula: A x 10^B x (RAW + C)
- **Filter: 0** no filter applied**. 1 to 6** custom filters to be applied. Contact us for more information.
- **Bit Offset:** If Data Type Bitfields is selected, this parameter shows from which bit begins to be read.
- **Bit Length:** If Data Type Bitfields is selected, this parameter shows how many bits are going to be read.

© HMS Industrial Networks S.L.U - All rights reserved
This information is subject to change without notice