# BACnet MS/TP Server & BACnet IP Server

## Mitsubishi Heavy Industries Air Conditioning

Compatible with RAC* Series, FD Series, KX6 and KXR6 (VRF) Series air conditioners commercialized by Mitsubishi Heavy Industries

**USER MANUAL**

Issue date: 09/2024 v1.7 ENGLISH

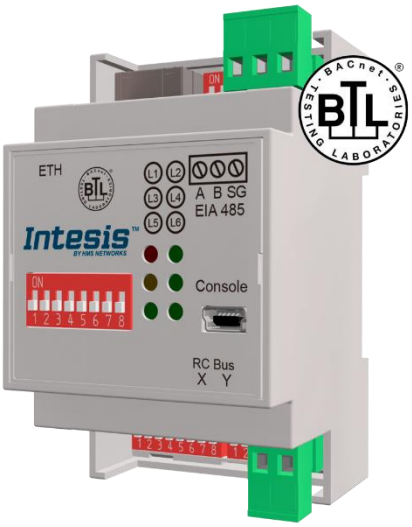


14 rue Edouard Petit
42000 St-Etienne

Tel : +33 477 92 03 56
Email : contact@rg2i.com
www.rg2i.com

# Important User Information

## Disclaimer

The information in this document is for informational purposes only. Please inform HMS Industrial Networks of any inaccuracies or omissions found in this document. HMS Industrial Networks disclaims any responsibility or liability for any errors that may appear in this document.

HMS Industrial Networks reserves the right to modify its products in line with its policy of continuous product development. The information in this document shall therefore not be construed as a commitment on the part of HMS Industrial Networks and is subject to change without notice. HMS Industrial Networks makes no commitment to update or keep current the information in this document.

The data, examples and illustrations found in this document are included for illustrative purposes and are only intended to help improve understanding of the functionality and handling of the product. In view of the wide range of possible applications of the product, and because of the many variables and requirements associated with any particular implementation, HMS Industrial Networks cannot assume responsibility or liability for actual use based on the data, examples or illustrations included in this document nor for any damages incurred during installation of the product. Those responsible for the use of the product must acquire sufficient knowledge in order to ensure that the product is used correctly in their specific application and that the application meets all performance and safety requirements including any applicable laws, regulations, codes and standards. Further, HMS Industrial Networks will under no circumstances assume liability or responsibility for any problems that may arise as a result from the use of undocumented features or functional side effects found outside the documented scope of the product. The effects caused by any direct or indirect use of such aspects of the product are undefined and may include e.g. compatibility issues and stability issues.

© HMS Industrial Networks S.L.U - All rights reserved
This information is subject to change without notice

Gateway for the integration of Mitsubishi Heavy Industries air conditioning units in BACnet enabled monitoring and control systems.

Compatible with RAC* Series, FD Series, KX6 and KXR6 (VRF) Series air conditioners commercialized by Mitsubishi Heavy Industries.

*RAC Series require optional SC-BIKN-E from MHI.

| ORDER CODE | LEGACY ORDER CODE |
|---|---|
| INBACMHI001R000 | MH-RC-BAC-1 |

© HMS Industrial Networks S.L.U - All rights reserved
This information is subject to change without notice

# INDEX


1 Description ..... 6
1.1 Introduction ..... 6
1.2 Functionality ..... 7
1.3 Capacity of Intesis ..... 7
1.4 Quick Setup ..... 7
2 Protocol Implementation Conformance Statement ..... 8
2.1 BACnet Standardized Device Profile (Annex L): ..... 8
2.2 Segmentation Capability: ..... 8
2.3 Data Link Layer Options: ..... 8
2.4 Device Address Binding: ..... 9
2.5 Networking Options: ..... 9
2.6 Character Sets Supported ..... 9
2.7 Gateway ..... 9
3 BACnet Interoperability Building Blocks Supported (BIBBs) ..... 10
3.1 Data Sharing BIBBs ..... 10
3.2 Alarm and Event Management BIBBs ..... 10
3.3 Scheduling BIBBs ..... 11
3.4 Trending BIBBs ..... 11
3.5 Network Management BIBBs ..... 11
3.6 Device Management BIBBs ..... 12
4 Service Types ..... 13
5 Objects ..... 14
5.1 Supported Object Types ..... 14
5.2 Member objects ..... 15
5.2.1 Type: Gateway ..... 15
5.2.2 Type: Indoor Unit ..... 15
5.3 Objects and properties ..... 16
5.3.1 Mitsubishi Heavy Industries AC Gateway (Device Object Type) ..... 16
5.3.2 OnOff_status (Binary Input Object Type) ..... 18
5.3.3 OnOff_command (Binary Output Object Type) ..... 19
5.3.4 Mode_status (Multistate Input Object Type) ..... 20
5.3.5 Mode_command (Multistate Output Object Type) ..... 21
5.3.6 Setpoint_status (Analog Input Object Type) ..... 22
5.3.7 Setpoint_command (Analog Output Object Type) ..... 23
5.3.8 FanSpeed_status (Multistate Input Object Type) ..... 24
5.3.9 FanSpeed_command (Multistate Output Object Type) ..... 25
5.3.10 AirDirectionUD_status (Multistate Input Object Type) ..... 26
5.3.11 AirDirectionUD_command (Multistate Output Object Type) ..... 27


© HMS Industrial Networks S.L.U - All rights reserved
This information is subject to change without notice

5.3.12 RoomTemperature_status (Analog Input Object Type) ... 28
5.3.13 RoomTemperature_command (Analog Output Object Type) ... 29
5.3.14 ErrorCode (Analog Input Object Type) ... 30
5.3.15 ErrorCodeM (Multistate Input Object Type) ... 31
5.3.16 ErrorActive (Binary Input Object Type) ... 33
5.3.17 ErrorAddress (Analog Input Object Type) ... 34
5.3.18 ErrorReset (Binary Output Object Type) ... 35
5.3.19 OnTimeCounter (Analog Value Object Type) ... 36
5.3.20 FilterSign (Binary Input Object Type) ... 37
5.3.21 FilterReset (Binary Output Object Type) ... 38
5.3.22 Occupancy (Multistate Value Object Type) ... 39
5.3.23 OccupiedCoolSetPoint (Analog Value Object Type) ... 40
5.3.24 OccupiedHeatSetPoint (Analog Value Object Type) ... 41
5.3.25 UnoccupiedCoolSetPoint (Analog Value Object Type) ... 42
5.3.26 UnoccupiedHeatSetPoint (Analog Value Object Type) ... 43
5.3.27 OccupancyContinuousCheck (Binary Value Object Type) ... 44
5.3.28 UnoccupiedDeadbandAction(Binary Value Object Type) ... 45
5.3.29 LockRemoteControl(Binary Value Object Type) ... 46
5.3.30 OutdoorTemp Status (Analog Input Object Type) ... 47
5.3.31 CenterRemote (Multistate Input Object Type) ... 48
6 Connections and switches ... 49
6.1 Connect to the Remote Controller bus ... 49
6.2 Connect to BACnet MS/TP ... 50
6.2.1 MS/TP MAC address switch configuration ... 50
6.2.2 MS/TP activation and baudrate ... 51
6.3 Connect to BACnet IP ... 51
6.3.1 BACnet Device Instance ... 51
7 Set-up process and troubleshooting ... 52
7.1 Pre-requisites ... 52
7.2 Physical checking ... 52
7.3 LED status ... 52
7.4 Occupancy ... 53
7.5 Configuration tool ... 55
7.5.1 Home ... 55
7.5.2 Configuration ... 56
7.5.3 Signals ... 56
8 AC Unit Types compatibility ... 57
9 Mechanical & electrical characteristics ... 57
10 Dimensions ... 58
11 Error codes ... 59

© HMS Industrial Networks S.L.U - All rights reserved
This information is subject to change without notice

# 1 Description

## 1.1 *Introduction*

This document describes the integration of Mitsubishi Heavy Industries air conditioning systems into BACnet compatible devices and systems using the *INBACMHI001R000* gateway.

The aim of this integration is to monitor and control your Mitsubishi Heavy Industries air conditioning system, remotely, from your Control Center using any commercial SCADA or monitoring software that includes a BACnet driver, or connect it to other BACnet devices to do any automation. To do it so, Intesis allows BACnet communication allowing polling or subscription requests (COV).

Intesis makes available the Mitsubishi Heavy Industries air conditioning system indoor units through independent BACnet objects.

Abstraction of Mitsubishi Heavy Industries air conditioning system properties and functionalities as fixed BACnet Objects. Intesis allows fixed BACnet object IDs mapping.

This document assumes that the user is familiar with BACnet and Mitsubishi Heavy Industries technologies and their technical terms.

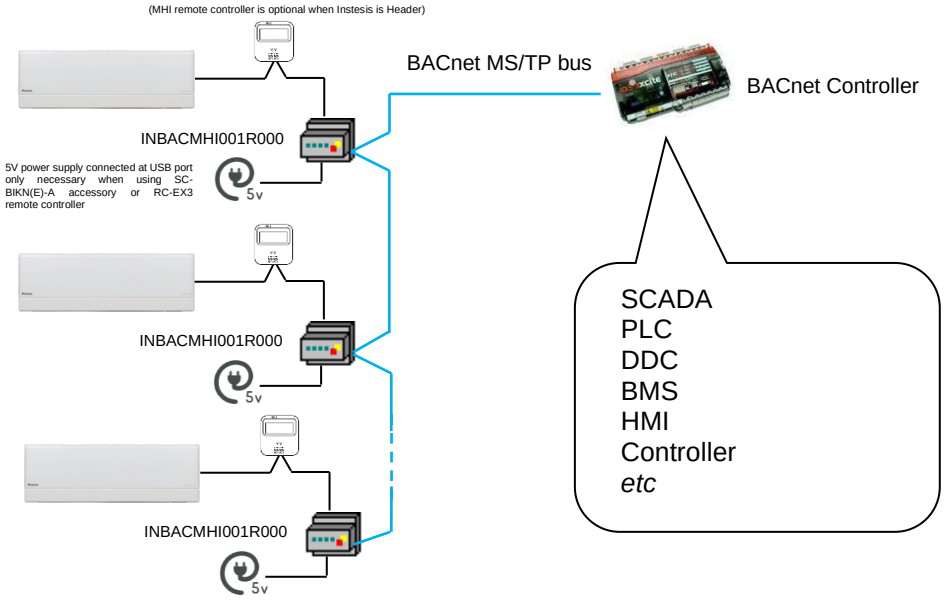


**BACnet MS/TP installation sketch**

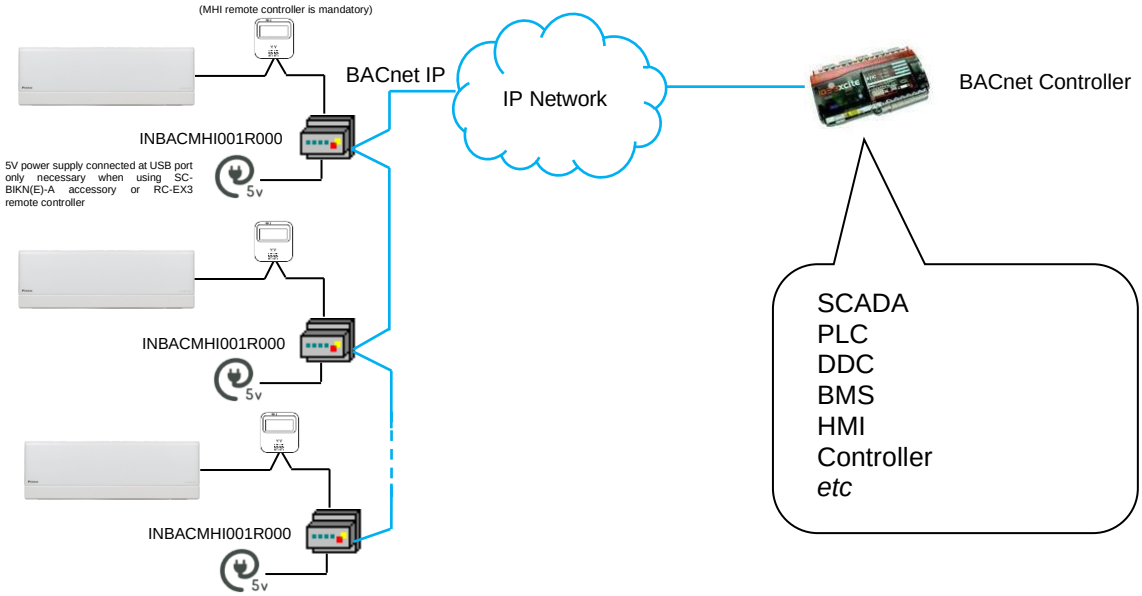


**BACnet IP installation sketch**

© HMS Industrial Networks S.L.U - All rights reserved
This information is subject to change without notice

## 1.2 *Functionality*

Intesis continuously reads the Mitsubishi Heavy Industries AC system and keeps the updated status of all objects in its memory, ready to be served when requested from the BACnet side.

The role of Intesis consists in associate the elements of the Mitsubishi Heavy Industries AC system with BACnet objects.

The control of the indoor units through the INBACMHI001R000 is permitted, so commands towards the Mitsubishi Heavy Industries AC units are permitted too.

The indoor unit is offered in a set of BACnet objects and extra functionalities.

## 1.3 *Capacity of Intesis*

Intesis is capable of integrating one or more Mitsubishi Heavy Industries AC units and its associated elements.

| Element | Max. | Notes |
|---|---|---|
| Number of indoor units | 1* | Number of indoor units that can be controlled through Intesis |
| Number of Objects | 30 | Number of Mitsubishi Heavy Industries AC signals available as objects into Intesis. |

* **NOTE**: Keep in mind that more than one unit can be connected to the same INBACMHI001R000 gateway. You can control then more than one AC unit, but it will be actuated as a single unit. Different commands to different AC units connected to the same INBACMHI001R000 will not be allowed.

## 1.4 *Quick Setup*

1. Install Intesis in the desired installation site (DIN rail mounting inside a metallic industrial cabinet connected to ground is recommended).
2. Connect the communication cables. Details in section 6.
3. Connect to Intesis USB port to 5V power-supply (only required if using RC-EX3 remote and/or SC-BIKN(E)-A).
4. (Optional) Connect Intesis to Ethernet and configure the Intesis using the configuration tool. Details in section 7.5.2.
5. Check the BACnet objects list for its integration to your BACnet project. Details in section 5.2.
6. Check if there is communication between BACnet and AC system. Details in section 7.5.3.
7. The Intesis is ready to be used in your system.

© HMS Industrial Networks S.L.U - All rights reserved
This information is subject to change without notice

# 2 Protocol Implementation Conformance Statement

BACnet Protocol Implementation Conformance Statement (PICS)

**Date:** *2014-12-05*
**Vendor Name:** *HMS Industrial Networks S.L.U*
**Product Name:** *INBACMHI001R000*
**Product Model Number:** *INBACMHI001R000*
**Application Software Version:** *1.0*
**Firmware Revision:** *1.0.0.0*
**BACnet Protocol Revision:** *12*

**Product Description:**

*Mitsubishi Heavy Industries air conditioning system – BACnet MS/TP & BACnet IP Gateway*

Abstraction of Mitsubishi Heavy Industries air conditioning system properties and functionalities as BACnet Objects.

## 2.1 *BACnet Standardized Device Profile (Annex L):*

☐ BACnet Operator Workstation (B-OWS)

☐ BACnet Building Controller (B-BC)

☐ BACnet Advanced Application Controller (B-AAC)

☒ BACnet Application Specific Controller (B-ASC)

☐ BACnet Smart Sensor (B-SS)

☐ BACnet Smart Actuator (B-SA)

Additional BACnet Interoperability Building Blocks Supported (Annex K):
*Reference of BIBBs List*

## 2.2 *Segmentation Capability:*

| | | | |
|---|---|---|---|
| Segmented request supported | ☐ No | ☒ Yes | Window Size *16* |
| Segmented responses supported | ☐ No | ☒ Yes | Window Size *16* |

## 2.3 *Data Link Layer Options:*

☒ BACnet IP, (Annex J)
☒ BACnet IP, (Annex J), Foreign Device
☐ ISO 8802-3, Ethernet (Clause 7)
☐ ANSI/ATA 878.1, 2.5 Mb. ARCNET (Clause 8)
☐ ANSI/ATA 878.1, RS-485 ARCNET (Clause 8), baud rate(s) ____
☒ MS/TP master (Clause 9), baud rate(s): 9600, 19200, 38400, 76800
☐ MS/TP slave (Clause 9), baud rate(s):
☐ Point-To-Point, EIA 232 (Clause 10), baud rate(s):
☐ Point-To-Point, modem, (Clause 10), baud rate(s):
☐ LonTalk, (Clause 11), medium: _____
☐ Other:

© HMS Industrial Networks S.L.U - All rights reserved
This information is subject to change without notice

## 2.4 *Device Address Binding:*

Is static device binding supported? (This is currently necessary for two-way communication with MS/TP slaves and certain other devices.) ☐ Yes ☒ No

## 2.5 *Networking Options:*

☐ Router, Clause 6 - List all routing configurations, e.g., ARCNET-Ethernet, Ethernet-MS/TP, etc.
☐ Annex H, BACnet Tunneling Router over IP
☐ BACnet/IP Broadcast Management Device (BBMD)
Does the BBMD support registrations by Foreign Devices? ☐ Yes ☐ No

## 2.6 *Character Sets Supported*

Indicating support for multiple character sets does not imply that they can all be supported simultaneously.

☒ ANSI X3.4
☐ IBM™/Microsoft™ DBCS
☐ JIS C 6226
☐ ISO 10646 (UCS-4)
☐ ISO 10646 (UCS-2)
☐ ISO 8859-1

## 2.7 *Gateway*

If this product is a communication gateway, describe the types of non-BACnet equipment/network(s) that the gateway supports:

**Mitsubishi Heavy Industries Air Conditioning with RAC Series, FD Series, KX6 and KXR6 (VRF) Series air conditioners commercialized by Mitsubishi Heavy Industries.**

© HMS Industrial Networks S.L.U - All rights reserved
This information is subject to change without notice

# 3 BACnet Interoperability Building Blocks Supported (BIBBs)

## 3.1 *Data Sharing BIBBs*

| BIBB Type | | Active | BACnet Service | Initiate | Execute |
|---|---|---|---|---|---|
| DS-RP-A | Data Sharing-ReadProperty–A | ☐ | ReadProperty | ☒ | ☐ |
| DS-RP-B | Data Sharing-ReadProperty–B | ☒ | ReadProperty | ☐ | ☒ |
| DS-RPM-A | Data Sharing-ReadPropertyMultiple–A | ☐ | ReadPropertyMultiple | ☒ | ☐ |
| DS-RPM-B | Data Sharing-ReadPropertyMultiple–B | ☒ | ReadPropertyMultiple | ☐ | ☒ |
| DS-RPC-A | Data Sharing-ReadPropertyConditiona–A | ☐ | ReadPropertyConditional | ☒ | ☐ |
| DS-RPC-B | Data Sharing-ReadPropertyConditional–B | ☐ | ReadPropertyConditional | ☐ | ☒ |
| DS-WP-A | Data Sharing-WriteProperty–A | ☐ | WriteProperty | ☒ | ☐ |
| DS-WP-B | Data Sharing-WriteProperty–B | ☒ | WriteProperty | ☐ | ☒ |
| DS-WPM-A | Data Sharing-WritePropertyMultiple–A | ☐ | WritePropertyMultiple | ☒ | ☐ |
| DS-WPM-B | Data Sharing-WritePropertyMultiple–B | ☒ | WritePropertyMultiple | ☐ | ☒ |
| DS-COV-A | Data Sharing-COV–A | ☐ | SubscribeCOV | ☒ | ☐ |
| | | ☐ | ConfirmedCOVNotification | ☐ | ☒ |
| | | ☐ | UnconfirmedCOVNotification | ☐ | ☒ |
| DS-COV-B | Data Sharing-COV–B | ☒ | SubscribeCOV | ☐ | ☒ |
| | | ☒ | ConfirmedCOVNotification | ☒ | ☐ |
| | | ☒ | UnconfirmedCOVNotification | ☒ | ☐ |
| DS-COVP-A | Data Sharing-COVP–A | ☐ | SubscribeCOV | ☒ | ☐ |
| | | ☐ | ConfirmedCOVNotification | ☐ | ☒ |
| | | ☐ | UnconfirmedCOVNotification | ☐ | ☒ |
| DS-COVP-B | Data Sharing-COVP–B | ☐ | SubscribeCOV | ☐ | ☒ |
| | | ☐ | ConfirmedCOVNotification | ☒ | ☐ |
| | | ☐ | UnconfirmedCOVNotification | ☒ | ☐ |
| DS-COVU-A | Data Sharing-COV-Unsolicited–A | ☐ | UncofirmedCOVNotification | ☐ | ☒ |
| DS-COVU-B | Data Sharing-COV-Unsolicited-B | ☐ | UncofirmedCOVNotification | ☒ | ☐ |

## 3.2 *Alarm and Event Management BIBBs*

| BIBB Type | | Active | BACnet Service | Initiate | Execute |
|---|---|---|---|---|---|
| AE-N-A | Alarm and Event-Notification–A | ☐ | ConfirmedEventNotification | ☐ | ☒ |
| | | ☐ | UnconfirmedEventNotification | ☐ | ☒ |
| AE-N-I-B | Alarm and Event-Notification Internal–B | ☐ | ConfirmedEventNotification | ☒ | ☐ |
| | | ☐ | UnconfirmedEventNotification | ☒ | ☐ |
| AE-N-E-B | Alarm and Event-Notification External–B | ☐ | ConfirmedEventNotification | ☒ | ☐ |
| | | ☐ | UnconfirmedEventNotification | ☒ | ☐ |
| AE-ACK-A | Alarm and Event-ACK–A | ☐ | AcknowledgeAlarm | ☒ | ☐ |
| AE-ACK-B | Alarm and Event-ACK–B | ☐ | AcknowledgeAlarm | ☐ | ☒ |
| AE-ASUM-A | Alarm and Event-Summary–A | ☐ | GetAlarmSummary | ☒ | ☐ |
| AE-ASUM-B | Alarm and Event-Summary–B | ☐ | GetAlarmSummary | ☐ | ☒ |
| AE-ESUM-A | Event-Summary–A | ☐ | GetEnrollmentSummary | ☒ | ☐ |
| AE-ESUM-B | Event-Summary–B | ☐ | GetEnrollmentSummary | ☐ | ☒ |
| AE-INFO-A | Alarm and Event-Information–A | ☐ | GetEventInformation | ☒ | ☐ |
| AE-INFO-B | Alarm and Event-Information–B | ☐ | GetEventInformation | ☐ | ☒ |
| AE-LS-A | Alarm and Event-LifeSafety–A | ☐ | LifeSafetyOperation | ☒ | ☐ |
| AE-LS-B | Alarm and Event-LifeSafety–B | ☐ | LifeSafetyOperation | ☐ | ☒ |

© HMS Industrial Networks S.L.U - All rights reserved
This information is subject to change without notice

## 3.3 *Scheduling BIBBs*

| BIBB Type | | Active | BACnet Service | Initiate | Execute |
|---|---|---|---|---|---|
| SCHED-A | Scheduling–A<br>*(must support DS-RP-A and DS-WP-A)* | ☐ | | | |
| | | ☐ | | | |
| SCHED-I-B | Scheduling-Internal–B<br>*(shall support DS-RP-B and DS-WP-B)*<br>*(shall also support ether DM-TS-B or DS-UTC-B)* | ☐ | | | |
| | | ☐ | | | |
| SCHED-E-B | Scheduling-External–B<br>*(shall support SCHED-I-B and DS-WP-A)* | ☐ | | | |
| | | ☐ | | | |
| T-VMT-A | Trending - Viewing and Modifying Trends–A | ☐ | ReadRange | ☐ | ☒ |
| T-VMT-I-B | Trending - Viewing and Modifying Trends Inernal–B | ☐ | ReadRange | ☐ | ☒ |
| T-VMT-E-B | Trending - Viewing and Modifying Trends External–B | ☐ | ReadRange | ☐ | ☒ |
| T-ATR-A | Trending - Automated Trend Retrieval–A | ☐ | ConfirmedEventNotification | ☐ | ☒ |
| | | ☐ | ReadRange | ☒ | ☐ |
| T-ATR-B | Trending - Automated Trend Retrieval–B | ☐ | ConfirmedEventNotification | ☒ | ☐ |
| | | ☐ | ReadRange | ☐ | ☒ |

## 3.4 *Trending BIBBs*

| BIBB Type | | Active | BACnet Service | Initiate | Execute |
|---|---|---|---|---|---|
| T-VMT-A | Trending - Viewing and Modifying Trends–A | ☐ | ReadRange | ☒ | ☐ |
| T-VMT-I-B | Trending - Viewing and Modifying Trends Inernal–B | ☐ | ReadRange | ☐ | ☒ |
| T-VMT-E-B | Trending - Viewing and Modifying Trends External–B | ☐ | ReadRange | ☐ | ☒ |
| T-ATR-A | Trending - Automated Trend Retrieval–A | ☐ | ConfirmedEventNotification | ☐ | ☒ |
| | | ☐ | ReadRange | ☒ | ☐ |
| T-ATR-B | Trending - Automated Trend Retrieval–B | ☐ | ConfirmedEventNotification | ☒ | ☐ |
| | | ☐ | ReadRange | ☐ | ☒ |

## 3.5 *Network Management BIBBs*

| BIBB Type | | Active | BACnet Service | Initiate | Execute |
|---|---|---|---|---|---|
| NM-CE-A | Network Management - Connection Establishment–A | ☐ | Establish-Connection-To-Network | ☒ | ☐ |
| | | ☐ | Disconnect-Connection-To-Network | ☒ | ☐ |
| NM-CE-B | Network Management - Connection Establishment– B | ☐ | Establish-Connection-To-Network | ☐ | ☒ |
| | | ☐ | Disconnect-Connection-To-Network | ☐ | ☒ |
| NM-RC-A | Network Management - Router Configuration–A | ☐ | Who-Is-Router-To-Network | ☒ | ☐ |
| | | ☐ | I-Am-Router-To-Network | ☐ | ☒ |
| | | ☐ | I-Could-Be-Router-To-Network | ☐ | ☒ |
| | | ☐ | Initialize-Routing-Table | ☒ | ☐ |
| | | ☐ | Initialize-Routing-Table-Ack | ☐ | ☒ |
| NM-RC-B | Network Management - Router Configuration–B | ☐ | Who-Is-Router-To-Network | ☒ | ☒ |
| | | ☐ | I-Am-Router-To-Network | ☒ | ☒ |
| | | ☐ | Initialize-Routing-Table | ☐ | ☒ |
| | | ☐ | Initialize-Routing-Table-Ack | ☒ | ☐ |

© HMS Industrial Networks S.L.U - All rights reserved
This information is subject to change without notice

## 3.6 *Device Management BIBBs*

| BIBB Type | | Active | BACnet Service | Initiate | Execute |
|---|---|---|---|---|---|
| DM-DDB-A | Device Management - Dynamic Device Binding–A | ☐ | Who-Is | ☒ | ☐ |
| | | ☐ | I-Am | ☐ | ☒ |
| DM-DDB-B | Device Management - Dynamic Device Binding–B | ☒ | Who-Is | ☐ | ☒ |
| | | ☒ | I-Am | ☒ | ☐ |
| DM-DOB-A | Device Management - Dynamic Object Binding–A | ☐ | Who-Has | ☒ | ☐ |
| | | ☐ | I-Have | ☐ | ☒ |
| DM-DOB-B | Device Management - Dynamic Object Binding–B | ☒ | Who-Has | ☐ | ☒ |
| | | ☒ | I-Have | ☒ | ☐ |
| DM-DCC-A | Device Management - DeviceCommunicationControl–A | ☐ | DeviceCommunicationControl | ☒ | ☐ |
| DM-DCC-B | Device Management - DeviceCommunicationControl–B | ☒ | DeviceCommunicationControl | ☐ | ☒ |
| DM-PT-A | Device Management - PrivateTransfer–A | ☐ | ConfirmedPrivateTransfer | ☒ | ☐ |
| | | ☐ | UnconfirmedPrivateTransfer | ☒ | ☐ |
| DM-PT-B | Device Management - PrivateTransfer–B | ☐ | ConfirmedPrivateTransfer | ☐ | ☒ |
| | | ☐ | UnconfirmedPrivateTransfer | ☐ | ☒ |
| DM-TM-A | Device Management - Text Message–A | ☐ | ConfirmedTextMessage | ☒ | ☐ |
| | | ☐ | UnconfirmedTextMessage | ☒ | ☐ |
| DM-TM-B | Device Management - Text Message–B | ☐ | ConfirmedTextMessage | ☐ | ☒ |
| | | ☐ | UnconfirmedTextMessage | ☐ | ☒ |
| DM-TS-A | Device Management - TimeSynchronization–A | ☐ | TimeSynchronization | ☒ | ☐ |
| DM-TS-B | Device Management - TimeSynchronization–B | ☐ | TimeSynchronization | ☐ | ☒ |
| DM-UTC-A | Device Management - UTCTimeSynchronization–A | ☐ | UTCTimeSynchronization | ☒ | ☐ |
| DM-UTC-B | Device Management - UTCTimeSynchronization–B | ☐ | UTCTimeSynchronization | ☐ | ☒ |
| DM-RD-A | Device Management - ReinitializeDevice–A | ☐ | ReinitializeDevice | ☒ | ☐ |
| DM-RD-B | Device Management - ReinitializeDevice–B | ☒ | ReinitializeDevice | ☐ | ☒ |
| DM-BR-A | Device Management - Backup and Restore–A | ☐ | AtomicReadFile | ☒ | ☐ |
| | | ☐ | AtomicWriteFile | ☒ | ☐ |
| | | ☐ | CreateObject | ☒ | ☐ |
| | | ☐ | ReinitializeDevice | ☒ | ☐ |
| DM-BR-B | Device Management - Backup and Restore–B | ☐ | AtomicReadFile | ☐ | ☒ |
| | | ☐ | AtomicWriteFile | ☐ | ☒ |
| | | ☐ | ReinitializeDevice | ☐ | ☒ |
| DM-R-A | Device Management - Restart–A | ☐ | UnconfimedCOVNotification | ☐ | ☒ |
| DM-R-B | Device Management - Restart–B | ☐ | UnconfimedCOVNotification | ☒ | ☐ |
| DM-LM-A | Device Management - List Manipulation–A | ☐ | AddListElement | ☒ | ☐ |
| | | ☐ | RemoveListElement | ☒ | ☐ |
| DM-LM-B | Device Management - List Manipulation–B | ☐ | AddListElement | ☐ | ☒ |
| | | ☐ | RemoveListElement | ☐ | ☒ |
| DM-OCD-A | Device Management - Object Creation and Deletion–A | ☐ | CreateObject | ☒ | ☐ |
| | | ☐ | DeleteObject | ☒ | ☐ |
| DM-OCD-B | Device Management - Object Creation and Deletion–B | ☐ | CreateObject | ☐ | ☒ |
| | | ☐ | DeleteObject | ☐ | ☒ |
| DM-VT-A | Device Management - Virtual Terminal–A | ☐ | VT-Open | ☒ | ☐ |
| | | ☐ | VT-Close | ☒ | ☒ |
| | | ☐ | VT-Data | ☒ | ☒ |
| DM-VT-B | Device Management - Virtual Terminal–B | ☐ | VT-Open | ☐ | ☒ |
| | | ☐ | VT-Close | ☒ | ☒ |
| | | ☐ | VT-Data | ☒ | ☒ |

© HMS Industrial Networks S.L.U - All rights reserved
This information is subject to change without notice

# 4 Service Types

| Service type | Service name | Supported | Remarks |
|---|---|---|---|
| Alarm and Event Services | AcknowledgeAlarm | ☐ | |
| | ConfirmedCOVNotification | ☐ | |
| | ConfirmedEventNotification | ☐ | |
| | GetAlarmSummary | ☐ | |
| | GetEnrollmentSummary | ☐ | |
| | SubscribeCOV | ☒ | |
| File Access Services | AtomicReadFile | ☐ | |
| | AtomicWriteFile | ☐ | |
| Object Access Services | AddListElement | ☐ | |
| | RemoveListElement | ☐ | |
| | CreateObject | ☐ | |
| | DeleteObject | ☐ | |
| | ReadProperty | ☒ | |
| | ReadPropertyConditional | ☐ | |
| | ReadPropertyMultiple | ☒ | |
| | ReadRange | ☐ | |
| | WriteProperty | ☒ | |
| | WritePropertyMultiple | ☒ | |
| Remote Device Management Services | DeviceComminicationControl | ☐ | |
| | ConfirmedPrivateTransfer | ☐ | |
| | ConfirmedTextMessage | ☐ | |
| | ReinitializeDevice | ☒ | |
| Virtual Terminal Services | VtOpen | ☐ | |
| | VtClose | ☐ | |
| | VtData | ☐ | |
| Security Services | Authenticate | ☐ | |
| | RequestKey | ☐ | |
| Unconfirmed Services | I-Am | ☒ | |
| | I-Have | ☒ | |
| | UnconfirmedCOVNotification | ☐ | |
| | UnconfirmedEventNotification | ☐ | |
| | UnconfirmedPrivateTransfer | ☐ | |
| | UnconfirmedTextMessage | ☐ | |
| | TimeSynchronization | ☐ | |
| | UtcTimeSynchronization | ☐ | |
| | Who-Has | ☒ | |
| | Who-Is | ☒ | |
| | LifeSafetyOperation | ☐ | |
| | SubscribeCOVProperty | ☒ | |
| | GetEventInformation | ☐ | |

© HMS Industrial Networks S.L.U - All rights reserved
This information is subject to change without notice

# 5 Objects

## 5.1 *Supported Object Types*

The objects supported are shown in the table below.

| Object Type | ID | Supported | Management Point |
|---|---|---|---|
| Analog-Input | 0 | ☒ | SetPoint_status<br>RoomTemperature_status<br>ErrorCode<br>ErrorAddress<br>OutdoorTemp_status |
| Analog-Output | 1 | ☒ | SetPoint_command<br>RoomTemperature_command |
| Analog-Value | 2 | ☒ | OnTimeCounter<br>OccupiedCoolSetPoint<br>OccupiedHeatSetPoint<br>UnoccupiedCoolSetPoint<br>UnoccupiedHeatSetPoint |
| Averaging | 18 | ☐ | |
| Binary-Input | 3 | ☒ | OnOff_status<br>ErrorActive<br>FIlterSign |
| Binary-Output | 4 | ☒ | OnOff_command<br>ErrorReset<br>FilterReset |
| Binary-Value | 5 | ☒ | OccupancyContinousCheck<br>UnnoccupiedDeadBandAction<br>LockRemoteControl |
| Calendar | 6 | ☐ | |
| Command | 7 | ☐ | |
| Device | 8 | ☒ | INBACMHI001R000 |
| Event-Enrollment | 9 | ☐ | |
| File | 10 | ☐ | |
| Group | 11 | ☐ | |
| Life-Safety-Point | 21 | ☐ | |
| Life-Safety-Zone | 22 | ☐ | |
| Loop | 12 | ☐ | |
| Multistate-Input | 13 | ☒ | Mode_status<br>FanSpeed_status<br>AirDirectionUD_status<br>ErrorCodeM<br>CenterRemote |
| Multistate-Output | 14 | ☒ | Mode_command<br>FanSpeed_command<br>AirDirectionUD_command |
| Multistate-Value | 19 | ☒ | Occupancy |
| Notification-Class | 15 | ☐ | |
| Program | 16 | ☐ | |
| Schedule | 17 | ☐ | |
| Trend-Log | 20 | ☐ | |

© HMS Industrial Networks S.L.U - All rights reserved
This information is subject to change without notice

## 5.2 *Member objects*

### 5.2.1 Type: Gateway

| Object-name | Description | Object-type | Object-instance |
|---|---|---|---|
| INBACMHI001R000 | Mitsubishi Heavy Industries RC Interface | Device | 246000* |

### 5.2.2 Type: Indoor Unit

| Object-name | Description | Object-type | Object-instance |
|---|---|---|---|
| OnOff_status | | BI | 0 |
| OnOff_command | | BO | 0 |
| Mode_status | | MI | 0 |
| Mode_command | | MO | 0 |
| SetPoint_status | | AI | 0 |
| SetPoint_command | | AO | 0 |
| FanSpeed_status | | MI | 1 |
| FanSpeed_command | | MO | 1 |
| AirDirectionUD_status | | MI | 2 |
| AirDirectionUD_command | | MO | 2 |
| RoomTemperature_status | | AI | 1 |
| RoomTemperature_command | | AO | 1 |
| ErrorCode | | AI | 2 |
| ErrorCodeM | | MI | 4 |
| ErrorActive | | BI | 1 |
| ErrorAddress | | AI | 4 |
| ErrorReset | | BO | 5 |
| OnTimeCounter | | AV | 0 |
| FilterSign | | BI | 6 |
| FilterReset | | BO | 4 |
| Occupancy | | MV | 0 |
| OccupiedCoolSetPoint | | AV | 1 |
| OccupiedHeatSetPoint | | AV | 2 |
| UnoccupiedCoolSetPoint | | AV | 3 |
| UnoccupiedHeatSetPoint | | AV | 4 |
| OccupancyContinuousCheck | | BV | 0 |
| UnoccupiedDeadbandAction | | BV | 1 |
| LockRemoteControl | | BV | 2 |
| OutdoorTemp_status | | AI | 8 |
| CenterRemote | | MI | 9 |

* This is the default value. Check section 5.3 (below) for more information.

© HMS Industrial Networks S.L.U - All rights reserved
This information is subject to change without notice

## 5.3 *Objects and properties*

Below you can find relevant information for the objects and properties.

**Object_Identifier:** In the **Device Object**, is configurable writing directly on the property. either from BACnet or through our configuration tools and can be set automatically or manually. When set automatically, it is set using a base address and the address selected in SW2 P1..P7. The base address can be selected using the configuration tool. When set manually, the address is directly the one configured on the configuration tool. See section 7.4 for more information

**Object_Name:** In the **Device Object**, is configurable writing directly on this property. This can be done using the configuration tools too. See section 7.5 for more information.

**Description:** In the **Device Object**, is configurable writing directly on the property, length maximum 63 chars. This string is configurable using the configuration tool. See section 7.5 for more information.

### 5.3.1 Mitsubishi Heavy Industries AC Gateway (Device Object Type)

| Property Identifier | Property Datatype | Value | ASHRAE | IBOX |
|---|---|---|---|---|
| Object_Identifier | BACnetObjectIdentifier | (Device, 246000) | R | R |
| Object_Name | CharacterString | " INBACMHI001R000" | R | R |
| Object_Type | BACnetObjectType | DEVICE (8) (Device Object Type) | R | R |
| System_Status | BACnetDeviceStatus | OPERATIONAL (0) | R | R |
| Vendor_Name | CharacterString | "HMS Industrial Networks S.L.U" | R | R |
| Vendor_Identifier | Unsigned16 | 246 | R | R |
| Model_Name | CharacterString | "INBACMHI001R000" | R | R |
| Firmware_Revision | CharacterString | "1.0.0.0" | R | R |
| Application_Software_ Version | CharacterString | "1.0.0.0" | R | R |
| Location | CharacterString | "" | O | - |
| Description | CharacterString | "Mitsubishi Heavy Industries RC interface" | O | R |
| Protocol_Version | Unsigned | 1 | R | R |
| Protocol_Revision | Unsigned | 12 | R | R |
| Protocol_Services_ Supported | BACnetServiceSupported | Refer to section 4 [Service Types] | R | R |
| Protocol_Object_Types_ Supported | BACnetObjectTypes Supported | Refer to section 5.1 [Object Types] | R | R |
| Object_List | BACnetArray[N] of BACnetObjectIdentifier | BACnetARRAY[N] | R | R |
| Structured_Object_List | BACnetArray[N] of BACnetObjectIdentifier | - | O | - |
| Max_APDU_Length_ Accepted | Unsigned | 480 when MSTP / 1476 when BACnet/IP | R | R |
| Segmentation_Supported | BACnetSegmentation | SEGMENTED-BOTH (0) | R | R |
| Max_Segments_accepted | Unsigned | 16 | O | R |
| VT_Classes_Supported | List of BACnetVTClass | - | O | - |
| Active_VT_Sessions | List of BACnetVTSession | - | O | - |
| Local_Date | Date | - | O | - |

© HMS Industrial Networks S.L.U - All rights reserved
This information is subject to change without notice

| | | | | |
|---|---|---|---|---|
| Local_Time | Time | - | O | - |
| UTC_Offset | INTEGER | - | O | - |
| Daylight_Savings_Status | BOOLEAN | - | O | - |
| APDU_Segment_Timeout | Unsigned | 3000 | R | R |
| APDU_Timeout | Unsigned | 3000 | R | R |
| Number_of_APDU_ Retries | Unsigned | 3 | R | R |
| List_Of_Session_Keys | List of BACnetSessionKey | - | O | - |
| Time_Synchronization_ Recipients | List of BACnetRecipient | - | O | - |
| Max_Master * ** | Unsigned | 127 | R | W |
| Max_Info_Frames * | Unsigned | 1 | O | R |
| Device_Address_Binding | List of BACnetAddressBinding | NULL (empty) | R | R |
| Database_Revision | Unsigned | 0 | R | R |
| Configuration_Files | BACnetArray[N] of BACnetObjectIdentifier | - | O | - |
| Last_Restore_Time | BACnetTimeStamp | - | O | - |
| Backup_Failure_Timeout | Unsigned16 | - | O | - |
| Active_COV_ Subscriptions | List of BACnetCOVSubscription | List of BACnetCOVSubscription | O | R |
| Slave_Proxy_Enable | BACnetArray[N] of BOOLEAN | - | O | - |
| Manual_Slave_Address_ Binding | List of BACnetAddressBinding | - | O | - |
| Auto_Slave_Discovery | BACnetArray[N] of BOOLEAN | - | O | - |
| Slave_Address_Binding | BACnetAddressBinding | - | O | - |
| Last_Restart_Reason | BACnetRestartReason | - | O | - |
| Time_Of_Device_Restart | BACnetTimeStamp | - | O | - |
| Restart_Notification_ Recipients | List of BACnetRecipient | - | O | - |
| UTC_Time_ Synchronization_ Recipients | List of BACnetRecipient | - | O | - |
| Time_Synchronization_ Interval | Unsigned | - | O | - |
| Align_Intervals | BOOLEAN | - | O | - |
| Interval_Offset | Unsigned | - | O | - |
| Profile_Name | CharacterString | - | O | - |

* Only available when MSTP is used

** Configurable through the configuration tool. See section 7.5 for more information.

© HMS Industrial Networks S.L.U - All rights reserved
This information is subject to change without notice

### 5.3.2 OnOff_status (Binary Input Object Type)

It indicates if the indoor unit is in On or Off status.

| Property Identifier | Property Datatype | Value | ASHRAE | IBOX |
|---|---|---|---|---|
| Object_Identifier | BACnetObjectIdentifier | (Binary Input, 0) | R | R |
| Object_Name | CharacterString | “OnOff_status” | R | R |
| Object_Type | BACnetObjectType | BINARY_INPUT (3) | R | R |
| Present_Value | BACnetBinaryPV | INACTIVE (0) / ACTIVE (1) | R | R |
| Description | CharacterString | - | O | - |
| Device_Type | CharacterString | - | O | - |
| Status_Flags | BACnetStatusFlags | {FALSE, FALSE/TRUE, FALSE, FALSE} | R | R |
| Event_State | BACnetEventState | STATE_NORMAL (0) | R | R |
| Reliability | BACnetReliability | NO_FAULT_DETECTED (0), UNRELIABLE_OTHER (7) | O | R |
| Out_Of_Service | BOOLEAN | FALSE | R | R |
| Polarity | BACnetPolarity | NORMAL (0) | R | R |
| Inactive_Text | CharacterString | "Off" | O | R |
| Active_Text | CharacterString | “On” | O | R |
| Change_Of_State_Time | BACnetDatetime | - | O | - |
| Change_Of_State_Count | Unsigned | - | O | - |
| Time_Of_State_Count_Reset | BACnetDatetime | - | O | - |
| Elapsed_Active_Time | Unsigned | - | O | - |
| Time_Of_Active_Time_Reset | BACnetDatetime | - | O | - |
| Time_Delay | Unsigned | - | O | - |
| Notification_Class | Unsigned | - | O | - |
| Alarm_Value | BACnetBinaryPV | - | O | - |
| Event_Enable | BACnetEventTransitionBits | - | O | - |
| Acked_Transitions | BACnetEventTransitionBits | - | O | - |
| Notify_Type | BACnetNotifyType | - | O | - |
| Event_Time_Stamps | BACnetArray[N] of BACnetTimeStamp | - | O | - |
| Profile_Name | CharacterString | - | O | - |

© HMS Industrial Networks S.L.U - All rights reserved
This information is subject to change without notice

### 5.3.3 OnOff_command (Binary Output Object Type)

It sets the indoor unit to On or Off.

| Property Identifier | Property Datatype | Value | ASHRAE | IBOX |
|---|---|---|---|---|
| Object_Identifier | BACnetObjectIdentifier | (Binary Output, 0) | R | R |
| Object_Name | CharacterString | “OnOff_command” | R | R |
| Object_Type | BACnetObjectType | BINARY_OUTPUT (4) | R | R |
| Present_Value | BACnetBinaryPV | INACTIVE (0) / ACTIVE (1) | W | W |
| Description | CharacterString | - | O | - |
| Device_Type | CharacterString | - | O | - |
| Status_Flags | BACnetStatusFlags | {FALSE, FALSE, FALSE, FALSE} | R | R |
| Event_State | BACnetEventState | STATE_NORMAL (0) | R | R |
| Reliability | BACnetReliability | NO_FAULT_DETECTED (0) | O | R |
| Out_Of_Service | BOOLEAN | FALSE | R | R |
| Polarity | BACnetPolarity | NORMAL (0) | R | R |
| Inactive_Text | CharacterString | "Off" | O | R |
| Active_Text | CharacterString | “On" | O | R |
| Change_Of_State_Time | BACnetDatetime | - | O | - |
| Change_Of_State_Count | Unsigned | - | O | - |
| Time_Of_State_Count_Reset | BACnetDatetime | - | O | - |
| Elapsed_Active_Time | Unsigned | - | O | - |
| Time_Of_Active_Time_Reset | BACnetDatetime | - | O | - |
| Minimum_Off_Time | Unsigned32 | - | O | - |
| Minimum_On_Time | Unsigned32 | - | O | - |
| Priority_Array | BACnetPriorityArray | BACnetPriorityArray | R | R |
| Relinquish_Default | BACnetBinaryPV | INACTIVE (0) | R | R |
| Time_Delay | Unsigned | - | O | - |
| Notification_Class | Unsigned | - | O | - |
| Feedback_Value | BACnetBinaryPV | - | O | - |
| Event_Enable | BACnetEventTransitionBits | - | O | - |
| Acked_Transitions | BACnetEventTransitionBits | - | O | - |
| Notify_Type | BACnetNotifyType | - | O | - |
| Event_Time_Stamps | BACnetArray[N] of BACnetTimeStamp | - | O | - |
| Profile_Name | CharacterString | - | O | - |

© HMS Industrial Networks S.L.U - All rights reserved
This information is subject to change without notice

### 5.3.4 Mode_status (Multistate Input Object Type)

It indicates the active mode for the indoor unit.

| Property Identifier | Property Datatype | Value | ASHRAE | IBOX |
|---|---|---|---|---|
| Object_Identifier | BACnetObjectIdentifier | (Multi-state Input, 0) | R | R |
| Object_Name | CharacterString | "Mode_status" | R | R |
| Object_Type | BACnetObjectType | MULTISTATE_INPUT (13) | R | R |
| Present_Value | Unsigned | 1 ~ 7 | R | R |
| Description | CharacterString | - | O | - |
| Device_Type | CharacterString | - | O | - |
| Status_Flags | BACnetStatusFlags | {FALSE, FALSE/TRUE, FALSE, FALSE} | R | R |
| Event_State | BACnetEventState | STATE_NORMAL (0) | R | R |
| Reliability | BACnetReliability | NO_FAULT_DETECTED (0), UNRELIABLE_OTHER (7) | O | R |
| Out_Of_Service | BOOLEAN | FALSE | R | R |
| Number_Of_States | Unsigned | 7 | R | R |
| State_Text | BACnetArray[N] of CharacterString | *Check **Mode Status setting table** below.* | O | R |
| Time_Delay | Unsigned | - | O | - |
| Notification_Class | Unsigned | - | O | - |
| Alarm_Values | List of Unsigned | - | O | - |
| Fault_Values | List of Unsigned | - | O | - |
| Event_Enable | BACnetEventTransitionBits | - | O | - |
| Acked_Transitions | BACnetEventTransitionBits | - | O | - |
| Notify_Type | BACnetNotifyType | - | O | - |
| Event_Time_Stamps | BACnetArray[N] of BACnetTimeStamp | - | O | - |
| Profile_Name | CharacterString | - | O | - |

#### Mode status setting table

Mode status interpretation is possible using the value in the following correspondence table.

| Pesent_Value | Contents displayed in State_Text |
|---|---|
| 1 | Heat |
| 2 | Cool |
| 3 | Fan |
| 4 | Dry |
| 5 | Auto |
| 6 | AutoCool |
| 7 | AutoHeat |

© HMS Industrial Networks S.L.U - All rights reserved
This information is subject to change without notice

### 5.3.5 Mode_command (Multistate Output Object Type)

It allows control over the indoor unit's mode.

| Property Identifier | Property Datatype | Value | ASHRAE | IBOX |
|---|---|---|---|---|
| Object_Identifier | BACnetObjectIdentifier | (Multi-state Output, 0) | R | R |
| Object_Name | CharacterString | "Mode_command" | R | R |
| Object_Type | BACnetObjectType | MULTISTATE_OUTPUT (14) | R | R |
| Present_Value | Unsigned | 1 ~ 5 | W | W |
| Description | CharacterString | - | O | - |
| Device_Type | CharacterString | - | O | - |
| Status_Flags | BACnetStatusFlags | {FALSE, FALSE, FALSE, FALSE} | R | R |
| Event_State | BACnetEventState | STATE_NORMAL (0) | R | R |
| Reliability | BACnetReliability | NO_FAULT_DETECTED (0) | O | R |
| Out_Of_Service | BOOLEAN | FALSE | R | R |
| Number_Of_States | Unsigned | 5 | R | R |
| State_Text | BACnetArray[N] of CharacterString | *Check **Mode Command setting table** below* | O | R |
| Priority_Array | BACnetPriorityArray | BACnetPriorityArray | R | R |
| Relinquish_Default | Unsigned | 1 | R | R |
| Time_Delay | Unsigned | - | O | - |
| Notification_Class | Unsigned | - | O | - |
| Feedback_Value | Unsigned | - | O | - |
| Event_Enable | BACnetEventTransitionBits | - | O | - |
| Acked_Transitions | BACnetEventTransitionBits | - | O | - |
| Notify_Type | BACnetNotifyType | - | O | - |
| Event_Time_Stamps | BACnetArray[N] of BACnetTimeStamp | - | O | - |
| Profile_Name | CharacterString | - | O | - |

#### Mode Command setting table

Mode commands can be set using the values in the following correspondence table.

| Pesent_Value | Contents displayed in State_Text |
|---|---|
| 1 | Heat |
| 2 | Cool |
| 3 | Fan |
| 4 | Dry |
| 5 | Auto |

© HMS Industrial Networks S.L.U - All rights reserved
This information is subject to change without notice

### 5.3.6 Setpoint_status (Analog Input Object Type)

It indicates the current setpoint temperature in the indoor unit.

| Property Identifier | Property Datatype | Value | ASHRAE | IBOX |
|---|---|---|---|---|
| Object_Identifier | BACnetObjectIdentifier | (Analog Input, 0) | R | R |
| Object_Name | CharacterString | “SetPoint_status” | R | R |
| Object_Type | BACnetObjectType | ANALOG_INPUT (0) | R | R |
| Present_Value | REAL | 16…32 ºC<br>60…90 ºF | R | R |
| Description | CharacterString | - | O | - |
| Device_Type | CharacterString | - | O | - |
| Status_Flags | BACnetStatusFlags | {FALSE, FALSE/TRUE, FALSE, FALSE} | R | R |
| Event_State | BACnetEventState | STATE_NORMAL (0) | R | R |
| Reliability | BACnetReliability | NO_FAULT_DETECTED (0),<br>UNRELIABLE_OTHER (7) | O | R |
| Out_Of_Service | BOOLEAN | FALSE | R | R |
| Update_Interval | Unsigned | - | O | - |
| Units ** | BACnetEngineeringUnits | Degrees Celsius (62),<br>Degrees Fahrenheit (64) | R | R |
| Min_Pres_Value | REAL | 16 ºC // 60 ºF | O | R |
| Max_Pres_Value | REAL | 32 ºC // 90 ºF | O | R |
| Resolution | REAL | - | O | - |
| COV_Increment | REAL | 0 | O | W |
| Time_Delay | Unsigned | - | O | - |
| Notification_Class | Unsigned | - | O | - |
| High_Limit | REAL | - | O | - |
| Low_Limit | REAL | - | O | - |
| Deadband | REAL | - | O | - |
| Limit_Enable | BACnetLimitEnable | - | O | - |
| Event_Enable | BACnetEventTransitionBits | - | O | - |
| Acked_Transitions | BACnetEventTransitionBits | - | O | - |
| Notify_Type | BACnetNotifyType | - | O | - |
| Event_Time_Stamps | BACnetArray[N] of<br>BACnetTimeStamp | - | O | - |
| Profile_Name | CharacterString | - | O | - |

** Use of Celsius or Fahrenheit units can be selected throught the switch configuration. Check section 6.1 for more information.

© HMS Industrial Networks S.L.U - All rights reserved
This information is subject to change without notice

### 5.3.7 Setpoint_command (Analog Output Object Type)

It sets the desired temperature in the indoor unit.

| Property Identifier | Property Datatype | Value | ASHRAE | IBOX |
|---|---|---|---|---|
| Object_Identifier | BACnetObjectIdentifier | (Analog Output, 0) | R | R |
| Object_Name | CharacterString | “SetPoint_command” | R | R |
| Object_Type | BACnetObjectType | ANALOG_OUTPUT (1) | R | R |
| Present_Value | REAL | 16…32 ºC<br>60…90 ºF | R | R |
| Description | CharacterString | - | O | - |
| Device_Type | CharacterString | - | O | - |
| Status_Flags | BACnetStatusFlags | {FALSE, FALSE, FALSE, FALSE} | R | R |
| Event_State | BACnetEventState | STATE_NORMAL (0) | R | R |
| Reliability | BACnetReliability | NO_FAULT_DETECTED (0) | O | R |
| Out_Of_Service | BOOLEAN | FALSE | R | R |
| Update_Interval | Unsigned | - | O | - |
| Units ** | BACnetEngineeringUnits | Degrees Celsius (62),<br>Degrees Fahrenheit (64) | R | R |
| Min_Pres_Value | REAL | 16 ºC // 60 ºF | O | R |
| Max_Pres_Value | REAL | 32 ºC // 90 ºF | O | R |
| Resolution | REAL | - | O | - |
| COV_Increment | REAL | 0 | O | W |
| Priority_Array | BACnetPriorityArray | BACnetPriorityArray | R | R |
| Relinquish_Default | Unsigned | 22 | R | R |
| Time_Delay | Unsigned | - | O | - |
| Notification_Class | Unsigned | - | O | - |
| High_Limit | REAL | - | O | - |
| Low_Limit | REAL | - | O | - |
| Deadband | REAL | - | O | - |
| Limit_Enable | BACnetLimitEnable | - | O | - |
| Event_Enable | BACnetEventTransitionBits | - | O | - |
| Acked_Transitions | BACnetEventTransitionBits | - | O | - |
| Notify_Type | BACnetNotifyType | - | O | - |
| Event_Time_Stamps | BACnetArray[N] of BACnetTimeStamp | - | O | - |
| Profile_Name | CharacterString | - | O | - |

** Use of Celsius or Fahrenheit units can be selected throught the switch configuration. Check section 6.1 for more information.

© HMS Industrial Networks S.L.U - All rights reserved
This information is subject to change without notice

### 5.3.8 FanSpeed_status (Multistate Input Object Type)

It indicates the fan speed status of the indoor unit.

| Property Identifier | Property Datatype | Value | ASHRAE | IBOX |
|---|---|---|---|---|
| Object_Identifier | BACnetObjectIdentifier | (Multi-state Input, 1) | R | R |
| Object_Name | CharacterString | "FanSpeed_status" | R | R |
| Object_Type | BACnetObjectType | MULTISTATE_INPUT (13) | R | R |
| Present_Value | Unsigned | 1 ~ 4 | R | R |
| Description | CharacterString | - | O | - |
| Device_Type | CharacterString | - | O | - |
| Status_Flags | BACnetStatusFlags | {FALSE, FALSE/TRUE, FALSE, FALSE} | R | R |
| Event_State | BACnetEventState | STATE_NORMAL (0) | R | R |
| Reliability | BACnetReliability | NO_FAULT_DETECTED (0), UNRELIABLE_OTHER (7) | O | R |
| Out_Of_Service | BOOLEAN | FALSE/TRUE | R | R |
| Number_Of_States | Unsigned | 4 | R | R |
| State_Text | BACnetArray[N] of CharacterString | *Check **Fan Speed status setting table** below.* | O | R |
| Time_Delay | Unsigned | - | O | - |
| Notification_Class | Unsigned | - | O | - |
| Alarm_Values | List of Unsigned | - | O | - |
| Fault_Values | List of Unsigned | - | O | - |
| Event_Enable | BACnetEventTransitionBits | - | O | - |
| Acked_Transitions | BACnetEventTransitionBits | - | O | - |
| Notify_Type | BACnetNotifyType | - | O | - |
| Event_Time_Stamps | BACnetArray[N] of BACnetTimeStamp | - | O | - |
| Profile_Name | CharacterString | - | O | - |

#### Fan Speed status setting table

Fan speed interpretation is possible using the value in the following correspondence table.

| Pesent_Value | Contents displayed in State_Text |
|---|---|
| 1 | Auto |
| 2 | Fan Speed 1 |
| 3 | Fan Speed 2 |
| 4 | Fan Speed 3 |
| 5 | Fan Speed 4 |

© HMS Industrial Networks S.L.U - All rights reserved
This information is subject to change without notice

### 5.3.9 FanSpeed_command (Multistate Output Object Type)

It allows control over the fan speed for the indoor unit.

| Property Identifier | Property Datatype | Value | ASHRAE | IBOX |
|---|---|---|---|---|
| Object_Identifier | BACnetObjectIdentifier | (Multi-state Output, 1) | R | R |
| Object_Name | CharacterString | “FanSpeed_command” | R | R |
| Object_Type | BACnetObjectType | MULTISTATE_OUTPUT (14) | R | R |
| Present_Value | Unsigned | 1 ~ 4 | W | W |
| Description | CharacterString | - | O | - |
| Device_Type | CharacterString | - | O | - |
| Status_Flags | BACnetStatusFlags | {FALSE, FALSE, FALSE, FALSE} | R | R |
| Event_State | BACnetEventState | STATE_NORMAL (0) | R | R |
| Reliability | BACnetReliability | NO_FAULT_DETECTED (0) | O | R |
| Out_Of_Service | BOOLEAN | FALSE | R | R |
| Number_Of_States | Unsigned | 4 | R | R |
| State_Text | BACnetArray[N] of CharacterString | *Check **Fan Speed command setting table** below* | O | R |
| Priority_Array | BACnetPriorityArray | BACnetPriorityArray | R | R |
| Relinquish_Default | Unsigned | 1 | R | R |
| Time_Delay | Unsigned | - | O | - |
| Notification_Class | Unsigned | - | O | - |
| Feedback_Value | Unsigned | - | O | - |
| Event_Enable | BACnetEventTransitionBits | - | O | - |
| Acked_Transitions | BACnetEventTransitionBits | - | O | - |
| Notify_Type | BACnetNotifyType | - | O | - |
| Event_Time_Stamps | BACnetArray[N] of BACnetTimeStamp | - | O | - |
| Profile_Name | CharacterString | - | O | - |

#### Fan Speed command setting table

Fan speed interpretation is possible using the value in the following correspondence table.

| Pesent_Value | Contents displayed in State_Text |
|---|---|
| 1 | Auto |
| 2 | Fan Speed 1 |
| 3 | Fan Speed 2 |
| 4 | Fan Speed 3 |
| 5 | Fan Speed 4 |

© HMS Industrial Networks S.L.U - All rights reserved
This information is subject to change without notice

### 5.3.10 AirDirectionUD_status (Multistate Input Object Type)

It indicates the status of the vertical vane (Up/Down) for the indoor unit.

| Property Identifier | Property Datatype | Value | ASHRAE | IBOX |
|---|---|---|---|---|
| Object_Identifier | BACnetObjectIdentifier | (Multi-state Input, 2) | R | R |
| Object_Name | CharacterString | "AirDirectionUD_status" | R | R |
| Object_Type | BACnetObjectType | MULTISTATE_INPUT(13) | R | R |
| Present_Value | Unsigned | 1 ~ 5 | R | R |
| Description | CharacterString | - | O | - |
| Device_Type | CharacterString | - | O | - |
| Status_Flags | BACnetStatusFlags | {FALSE, FALSE/TRUE, FALSE, FALSE} | R | R |
| Event_State | BACnetEventState | STATE_NORMAL (0) | R | R |
| Reliability | BACnetReliability | NO_FAULT_DETECTED (0), UNRELIABLE_OTHER (7) | O | R |
| Out_Of_Service | BOOLEAN | FALSE/TRUE | R | R |
| Number_Of_States | Unsigned | 5 | R | R |
| State_Text | BACnetArray[N] of CharacterString | *Check **Air Direction Status table** below.* | O | R |
| Time_Delay | Unsigned | - | O | - |
| Notification_Class | Unsigned | - | O | - |
| Alarm_Values | List of Unsigned | - | O | - |
| Fault_Values | List of Unsigned | - | O | - |
| Event_Enable | BACnetEventTransitionBits | - | O | - |
| Acked_Transitions | BACnetEventTransitionBits | - | O | - |
| Notify_Type | BACnetNotifyType | - | O | - |
| Event_Time_Stamps | BACnetArray[N] of BACnetTimeStamp | - | O | - |
| Profile_Name | CharacterString | - | O | - |

#### Air direction Up/Down status table

Air direction interpretation is possible using the value in the following correspondence table.

| Pesent_Value | Contents displayed in State_Text |
|---|---|
| 1 | Pos-1 |
| 2 | Pos-2 |
| 3 | Pos-3 |
| 4 | Pos-4 |
| 5 | Swing |

© HMS Industrial Networks S.L.U - All rights reserved
This information is subject to change without notice

### 5.3.11 AirDirectionUD_command (Multistate Output Object Type)

It allows control over the vertical air direction (Up/Down) for the indoor unit. Note that, in case indoor unit has vanes, INBACMHI001R000 switch configuration needs to be set accordingly. See installation sheet for detail.

| Property Identifier | Property Datatype | Value | ASHRAE | IBOX |
|---|---|---|---|---|
| Object_Identifier | BACnetObjectIdentifier | (Multi-state Output, 2) | R | R |
| Object_Name | CharacterString | “AirDirectionUD_command” | R | R |
| Object_Type | BACnetObjectType | MULTISTATE_OUTPUT (14) | R | R |
| Present_Value | Unsigned | 1 ~ 5 | W | W |
| Description | CharacterString | - | O | - |
| Device_Type | CharacterString | - | O | - |
| Status_Flags | BACnetStatusFlags | {FALSE, FALSE, FALSE, FALSE} | R | R |
| Event_State | BACnetEventState | STATE_NORMAL (0) | R | R |
| Reliability | BACnetReliability | NO_FAULT_DETECTED (0) | O | R |
| Out_Of_Service | BOOLEAN | FALSE | R | R |
| Number_Of_States | Unsigned | 5 | R | R |
| State_Text | BACnetArray[N] of CharacterString | *Check **Air Direction Command table** below* | O | R |
| Priority_Array | BACnetPriorityArray | - | R | R |
| Relinquish_Default | Unsigned | - | R | R |
| Time_Delay | Unsigned | - | O | - |
| Notification_Class | Unsigned | - | O | - |
| Feedback_Value | Unsigned | - | O | - |
| Event_Enable | BACnetEventTransitionBits | - | O | - |
| Acked_Transitions | BACnetEventTransitionBits | - | O | - |
| Notify_Type | BACnetNotifyType | - | O | - |
| Event_Time_Stamps | BACnetArray[N] of BACnetTimeStamp | - | O | - |
| Profile_Name | CharacterString | - | O | - |

#### Air direction Up/Down Command table

Air direction commands can be set using the values in the following correspondence table.

| Pesent_Value | Contents displayed in State_Text |
|---|---|
| 1 | Pos-1 |
| 2 | Pos-2 |
| 3 | Pos-3 |
| 4 | Pos-4 |
| 5 | Swing |

© HMS Industrial Networks S.L.U - All rights reserved
This information is subject to change without notice

### 5.3.12 RoomTemperature_status (Analog Input Object Type)

It indicates the room temperature from the sensor in the indoor unit or the remote controller, depending on indoor unit configuration.

| Property Identifier | Property Datatype | Value | ASHRAE | IBOX |
|---|---|---|---|---|
| Object_Identifier | BACnetObjectIdentifier | (Analog Input, 1) | R | R |
| Object_Name | CharacterString | “RoomTemperature_status” | R | R |
| Object_Type | BACnetObjectType | ANALOG_INPUT (0) | R | R |
| Present_Value | REAL | -10…50 | R | R |
| Description | CharacterString | - | O | - |
| Device_Type | CharacterString | - | O | - |
| Status_Flags | BACnetStatusFlags | {FALSE, FALSE/TRUE, FALSE, FALSE} | R | R |
| Event_State | BACnetEventState | STATE_NORMAL (0) | R | R |
| Reliability | BACnetReliability | NO_FAULT_DETECTED (0),<br>UNRELIABLE_OTHER (7) | O | R |
| Out_Of_Service | BOOLEAN | FALSE/TRUE | R | R |
| Update_Interval | Unsigned | - | O | - |
| Units | BACnetEngineeringUnits | Degrees Celsius (62)<br>Degrees Fahrenheit (64) | R | R |
| Min_Pres_Value | REAL | - | O | - |
| Max_Pres_Value | REAL | - | O | - |
| Resolution | REAL | - | O | - |
| COV_Increment | REAL | 0 | O | W |
| Time_Delay | Unsigned | - | O | - |
| Notification_Class | Unsigned | - | O | - |
| High_Limit | REAL | - | O | - |
| Low_Limit | REAL | - | O | - |
| Deadband | REAL | - | O | - |
| Limit_Enable | BACnetLimitEnable | - | O | - |
| Event_Enable | BACnetEventTransitionBits | - | O | - |
| Acked_Transitions | BACnetEventTransitionBits | - | O | - |
| Notify_Type | BACnetNotifyType | - | O | - |
| Event_Time_Stamps | BACnetArray[N] of BACnetTimeStamp | - | O | - |
| Profile_Name | CharacterString | - | O | - |

© HMS Industrial Networks S.L.U - All rights reserved
This information is subject to change without notice

### 5.3.13 RoomTemperature_command (Analog Output Object Type)

It sets the room temperature to be used on the Mitsubishi Heavy Industries Ac system. Note that this parameter can only take effect when INBACMHI001R000 is setup as Master of X-Y bus (see installation sheet for more detail).

| Property Identifier | Property Datatype | Value | ASHRAE | IBOX |
|---|---|---|---|---|
| Object_Identifier | BACnetObjectIdentifier | (Analog Output, 1) | R | R |
| Object_Name | CharacterString | “RoomTemperature_command” | R | R |
| Object_Type | BACnetObjectType | ANALOG_INPUT (0) | R | R |
| Present_Value | REAL | -10…50 | R | R |
| Description | CharacterString | - | O | - |
| Device_Type | CharacterString | - | O | - |
| Status_Flags | BACnetStatusFlags | {FALSE, FALSE, FALSE, FALSE} | R | R |
| Event_State | BACnetEventState | STATE_NORMAL (0) | R | R |
| Reliability | BACnetReliability | NO_FAULT_DETECTED (0) | O | R |
| Out_Of_Service | BOOLEAN | FALSE | R | R |
| Update_Interval | Unsigned | - | O | - |
| Units ** | BACnetEngineeringUnits | Degrees Celsius (62)<br>Degrees Fahrenheit (64) | R | R |
| Min_Pres_Value | REAL | - | O | - |
| Max_Pres_Value | REAL | - | O | - |
| Resolution | REAL | - | O | - |
| COV_Increment | REAL | 0 | O | W |
| Priority_Array | BACnetPriorityArray | BACnetPriorityArray | R | R |
| Relinquish_Default | Unsigned | 22 | R | R |
| Time_Delay | Unsigned | - | O | - |
| Notification_Class | Unsigned | - | O | - |
| High_Limit | REAL | - | O | - |
| Low_Limit | REAL | - | O | - |
| Deadband | REAL | - | O | - |
| Limit_Enable | BACnetLimitEnable | - | O | - |
| Event_Enable | BACnetEventTransitionBits | - | O | - |
| Acked_Transitions | BACnetEventTransitionBits | - | O | - |
| Notify_Type | BACnetNotifyType | - | O | - |
| Event_Time_Stamps | BACnetArray[N] of BACnetTimeStamp | - | O | - |
| Profile_Name | CharacterString | - | O | - |

** Use of Celsius or Fahrenheit units can be selected throught the switch configuration. Check section 6.1 for more information.

© HMS Industrial Networks S.L.U - All rights reserved
This information is subject to change without notice

### 5.3.14 ErrorCode (Analog Input Object Type)

It indicates the current error present in the AC system.

| Property Identifier | Property Datatype | Value | ASHRAE | IBOX |
|---|---|---|---|---|
| Object_Identifier | BACnetObjectIdentifier | (Analog Input, 2) | R | R |
| Object_Name | CharacterString | “ErrorCode” | R | R |
| Object_Type | BACnetObjectType | ANALOG_INPUT (0) | R | R |
| Present_Value | REAL | -1… 92* | R | R |
| Description | CharacterString | - | O | - |
| Device_Type | CharacterString | - | O | - |
| Status_Flags | BACnetStatusFlags | {FALSE, FALSE, FALSE, FALSE} | R | R |
| Event_State | BACnetEventState | STATE_NORMAL (0) | R | R |
| Reliability | BACnetReliability | NO_FAULT_DETECTED (0) | O | R |
| Out_Of_Service | BOOLEAN | FALSE | R | R |
| Update_Interval | Unsigned | 300 | O | - |
| Units | BACnetEngineeringUnits | NO_UNITS (95) | R | R |
| Min_Pres_Value | REAL | - | O | - |
| Max_Pres_Value | REAL | - | O | - |
| Resolution | REAL | - | O | - |
| COV_Increment | REAL | 0 | O | W |
| Time_Delay | Unsigned | - | O | - |
| Notification_Class | Unsigned | - | O | - |
| High_Limit | REAL | - | O | - |
| Low_Limit | REAL | - | O | - |
| Deadband | REAL | - | O | - |
| Limit_Enable | BACnetLimitEnable | - | O | - |
| Event_Enable | BACnetEventTransitionBits | - | O | - |
| Acked_Transitions | BACnetEventTransitionBits | - | O | - |
| Notify_Type | BACnetNotifyType | - | O | - |
| Event_Time_Stamps | BACnetArray[N] of BACnetTimeStamp | - | O | - |
| Profile_Name | CharacterString | - | O | - |

* Check section 0 for more information about each error code.

© HMS Industrial Networks S.L.U - All rights reserved
This information is subject to change without notice

### 5.3.15 ErrorCodeM (Multistate Input Object Type)

It indicates the current error present in the AC system.

| Property Identifier | Property Datatype | Value | ASHRAE | IBOX |
|---|---|---|---|---|
| Object_Identifier | BACnetObjectIdentifier | (Multi-state Input, 4) | R | R |
| Object_Name | CharacterString | "ErrorCodeM" | R | R |
| Object_Type | BACnetObjectType | MULTISTATE_INPUT(13) | R | R |
| Present_Value | Unsigned | 1 ~ 92 | R | R |
| Description | CharacterString | - | O | - |
| Device_Type | CharacterString | - | O | - |
| Status_Flags | BACnetStatusFlags | {FALSE, FALSE, FALSE, FALSE} | R | R |
| Event_State | BACnetEventState | STATE_NORMAL (0) | R | R |
| Reliability | BACnetReliability | NO_FAULT_DETECTED (0) | O | R |
| Out_Of_Service | BOOLEAN | FALSE | R | R |
| Number_Of_States | Unsigned | 92 | R | R |
| State_Text | BACnetArray[N] of CharacterString | *Check **Error Code table** below.* | O | R |
| Time_Delay | Unsigned | - | O | - |
| Notification_Class | Unsigned | - | O | - |
| Alarm_Values | List of Unsigned | - | O | - |
| Fault_Values | List of Unsigned | - | O | - |
| Event_Enable | BACnetEventTransitionBits | - | O | - |
| Acked_Transitions | BACnetEventTransitionBits | - | O | - |
| Notify_Type | BACnetNotifyType | - | O | - |
| Event_Time_Stamps | BACnetArray[N] of BACnetTimeStamp | - | O | - |
| Profile_Name | CharacterString | - | O | - |

© HMS Industrial Networks S.L.U - All rights reserved
This information is subject to change without notice

## Error Code table

In the table below you will find the error correspondence value.

| Pesent_Value | State_Text |
|---|---|
| 1 | |
| 2 | CommError |
| 3 | E1 |
| 4 | E2 |
| 5 | E3 |
| 6 | E4 |
| 7 | E5 |
| 8 | E6 |
| 9 | E7 |
| 10 | E8 |
| 11 | E9 |
| 12 | E10 |
| 13 | E11 |
| 14 | E12 |
| 15 | E13 |
| 16 | E14 |
| 17 | E15 |
| 18 | E16 |
| 19 | E17 |
| 20 | E18 |
| 21 | E19 |
| 22 | E20 |
| 23 | E21 |
| 24 | E22 |
| 25 | E23 |
| 26 | E24 |
| 27 | E25 |
| 28 | E26 |
| 29 | E27 |
| 30 | E28 |
| 31 | E29 |

| Pesent_Value | State_Text |
|---|---|
| 32 | E30 |
| 33 | E31 |
| 34 | E32 |
| 35 | E33 |
| 36 | E34 |
| 37 | E35 |
| 38 | E36 |
| 39 | E37 |
| 40 | E38 |
| 41 | E39 |
| 42 | E40 |
| 43 | E41 |
| 44 | E42 |
| 45 | E43 |
| 46 | E44 |
| 47 | E45 |
| 48 | E46 |
| 49 | E47 |
| 50 | E48 |
| 51 | E49 |
| 52 | E50 |
| 53 | E51 |
| 54 | E52 |
| 55 | E53 |
| 56 | E54 |
| 57 | E55 |
| 58 | E56 |
| 59 | E57 |
| 60 | E58 |
| 61 | E59 |
| 62 | E60 |

| Pesent_Value | State_Text |
|---|---|
| 63 | E61 |
| 64 | E62 |
| 65 | E63 |
| 66 | E64 |
| 67 | E65 |
| 68 | E66 |
| 69 | E67 |
| 70 | E68 |
| 71 | E69 |
| 72 | E70 |
| 73 | E71 |
| 74 | E72 |
| 75 | E73 |
| 76 | E74 |
| 77 | E75 |
| 78 | E76 |
| 79 | E77 |
| 80 | E78 |
| 81 | E79 |
| 82 | E80 |
| 83 | E81 |
| 84 | E82 |
| 85 | E83 |
| 86 | E84 |
| 87 | E85 |
| 88 | E86 |
| 89 | E87 |
| 90 | E88 |
| 91 | E89 |
| 92 | E90 |

Check section 0 for more information about each error code.

© HMS Industrial Networks S.L.U - All rights reserved
This information is subject to change without notice

### 5.3.16 ErrorActive (Binary Input Object Type)

It indicates if there is an active error in the indoor unit.

| Property Identifier | Property Datatype | Value | ASHRAE | IBOX |
|---|---|---|---|---|
| Object_Identifier | BACnetObjectIdentifier | (Binary Input, 1) | R | R |
| Object_Name | CharacterString | “ErrorActive” | R | R |
| Object_Type | BACnetObjectType | BINARY_INPUT (3) | R | R |
| Present_Value | BACnetBinaryPV | INACTIVE (0) / ACTIVE (1) | R | R |
| Description | CharacterString | - | O | - |
| Device_Type | CharacterString | - | O | - |
| Status_Flags | BACnetStatusFlags | {FALSE, FALSE, FALSE, FALSE} | R | R |
| Event_State | BACnetEventState | STATE_NORMAL (0) | R | R |
| Reliability | BACnetReliability | NO_FAULT_DETECTED (0) | O | R |
| Out_Of_Service | BOOLEAN | FALSE | R | R |
| Polarity | BACnetPolarity | NORMAL (0) | R | R |
| Inactive_Text | CharacterString | "No Error" | O | R |
| Active_Text | CharacterString | “Error” | O | R |
| Change_Of_State_Time | BACnetDatetime | - | O | - |
| Change_Of_State_Count | Unsigned | - | O | - |
| Time_Of_State_Count_Reset | BACnetDatetime | - | O | - |
| Elapsed_Active_Time | Unsigned | - | O | - |
| Time_Of_Active_Time_Reset | BACnetDatetime | - | O | - |
| Time_Delay | Unsigned | - | O | - |
| Notification_Class | Unsigned | - | O | - |
| Alarm_Value | BACnetBinaryPV | - | O | - |
| Event_Enable | BACnetEventTransitionBits | - | O | - |
| Acked_Transitions | BACnetEventTransitionBits | - | O | - |
| Notify_Type | BACnetNotifyType | - | O | - |
| Event_Time_Stamps | BACnetArray[N] of BACnetTimeStamp | - | O | - |
| Profile_Name | CharacterString | - | O | - |

© HMS Industrial Networks S.L.U - All rights reserved
This information is subject to change without notice

### 5.3.17 ErrorAddress (Analog Input Object Type)

It indicates the indoor unit address where the error is active.

| Property Identifier | Property Datatype | Value | ASHRAE | IBOX |
|---|---|---|---|---|
| Object_Identifier | BACnetObjectIdentifier | (Analog Input, 4) | R | R |
| Object_Name | CharacterString | “ErrorAddress” | R | R |
| Object_Type | BACnetObjectType | ANALOG_INPUT (0) | R | R |
| Present_Value | REAL | | R | R |
| Description | CharacterString | - | O | - |
| Device_Type | CharacterString | - | O | - |
| Status_Flags | BACnetStatusFlags | {FALSE, FALSE/TRUE, FALSE, FALSE} | R | R |
| Event_State | BACnetEventState | STATE_NORMAL (0) | R | R |
| Reliability | BACnetReliability | NO_FAULT_DETECTED (0), UNRELIABLE_OTHER (7) | O | R |
| Out_Of_Service | BOOLEAN | FALSE/TRUE | R | R |
| Update_Interval | Unsigned | - | O | - |
| Units | BACnetEngineeringUnits | - | R | R |
| Min_Pres_Value | REAL | - | O | - |
| Max_Pres_Value | REAL | - | O | - |
| Resolution | REAL | - | O | - |
| COV_Increment | REAL | 0 | O | W |
| Time_Delay | Unsigned | - | O | - |
| Notification_Class | Unsigned | - | O | - |
| High_Limit | REAL | - | O | - |
| Low_Limit | REAL | - | O | - |
| Deadband | REAL | - | O | - |
| Limit_Enable | BACnetLimitEnable | - | O | - |
| Event_Enable | BACnetEventTransitionBits | - | O | - |
| Acked_Transitions | BACnetEventTransitionBits | - | O | - |
| Notify_Type | BACnetNotifyType | - | O | - |
| Event_Time_Stamps | BACnetArray[N] of BACnetTimeStamp | - | O | - |
| Profile_Name | CharacterString | - | O | - |

© HMS Industrial Networks S.L.U - All rights reserved
This information is subject to change without notice

### 5.3.18 ErrorReset (Binary Output Object Type)

It resets the error signal.

| Property Identifier | Property Datatype | Value | ASHRAE | IBOX |
|---|---|---|---|---|
| Object_Identifier | BACnetObjectIdentifier | (Binary Output, 5) | R | R |
| Object_Name | CharacterString | “ErrorReset” | R | R |
| Object_Type | BACnetObjectType | BINARY_OUTPUT (4) | R | R |
| Present_Value | BACnetBinaryPV | INACTIVE (0) / ACTIVE (1) | W | W |
| Description | CharacterString | - | O | - |
| Device_Type | CharacterString | - | O | - |
| Status_Flags | BACnetStatusFlags | {FALSE, FALSE, FALSE, FALSE} | R | R |
| Event_State | BACnetEventState | STATE_NORMAL (0) | R | R |
| Reliability | BACnetReliability | NO_FAULT_DETECTED (0) | O | R |
| Out_Of_Service | BOOLEAN | FALSE | R | R |
| Polarity | BACnetPolarity | NORMAL (0) | R | R |
| Inactive_Text | CharacterString | "Normal" | O | R |
| Active_Text | CharacterString | “Reset" | O | R |
| Change_Of_State_Time | BACnetDatetime | - | O | - |
| Change_Of_State_Count | Unsigned | - | O | - |
| Time_Of_State_Count_Reset | BACnetDatetime | - | O | - |
| Elapsed_Active_Time | Unsigned | - | O | - |
| Time_Of_Active_Time_Reset | BACnetDatetime | - | O | - |
| Minimum_Off_Time | Unsigned32 | - | O | - |
| Minimum_On_Time | Unsigned32 | - | O | - |
| Priority_Array | BACnetPriorityArray | BACnetPriorityArray | R | R |
| Relinquish_Default | BACnetBinaryPV | INACTIVE (0) | R | R |
| Time_Delay | Unsigned | - | O | - |
| Notification_Class | Unsigned | - | O | - |
| Feedback_Value | BACnetBinaryPV | - | O | - |
| Event_Enable | BACnetEventTransitionBits | - | O | - |
| Acked_Transitions | BACnetEventTransitionBits | - | O | - |
| Notify_Type | BACnetNotifyType | - | O | - |
| Event_Time_Stamps | BACnetArray[N] of BACnetTimeStamp | - | O | - |
| Profile_Name | CharacterString | - | O | - |

© HMS Industrial Networks S.L.U - All rights reserved
This information is subject to change without notice

### 5.3.19 OnTimeCounter (Analog Value Object Type)

It indicates the amount of time the units have been running.

| Property Identifier | Property Datatype | Value | ASHRAE | IBOX |
|---|---|---|---|---|
| Object_Identifier | BACnetObjectIdentifier | (Analog Value, 0) | R | R |
| Object_Name | CharacterString | “OnTimeCounter” | R | R |
| Object_Type | BACnetObjectType | ANALOG_VALUE (2) | R | R |
| Present_Value | REAL | 0 .. 65535 | R | R |
| Description | CharacterString | - | O | - |
| Status_Flags | BACnetStatusFlags | {FALSE, FALSE, FALSE, FALSE} | R | R |
| Event_State | BACnetEventState | STATE_NORMAL (0) | R | R |
| Reliability | BACnetReliability | NO_FAULT_DETECTED (0) | O | R |
| Out_Of_Service | BOOLEAN | FALSE | R | R |
| Update_Interval | Unsigned | - | O | - |
| Units | BACnetEngineeringUnits | Hours (71) | R | R |
| Min_Pres_Value | REAL | - | O | - |
| Max_Pres_Value | REAL | - | O | - |
| Resolution | REAL | - | O | - |
| COV_Increment | REAL | 0 | O | W |
| Time_Delay | Unsigned | - | O | - |
| Notification_Class | Unsigned | - | O | - |
| High_Limit | REAL | - | O | - |
| Low_Limit | REAL | - | O | - |
| Deadband | REAL | - | O | - |
| Limit_Enable | BACnetLimitEnable | - | O | - |
| Event_Enable | BACnetEventTransitionBits | - | O | - |
| Acked_Transitions | BACnetEventTransitionBits | - | O | - |
| Notify_Type | BACnetNotifyType | - | O | - |
| Event_Time_Stamps | BACnetArray[N] of BACnetTimeStamp | - | O | - |
| Profile_Name | CharacterString | - | O | - |

© HMS Industrial Networks S.L.U - All rights reserved
This information is subject to change without notice

### 5.3.20 FilterSign (Binary Input Object Type)

It indicates the status of the filter sign.

| Property Identifier | Property Datatype | Value | ASHRAE | IBOX |
|---|---|---|---|---|
| Object_Identifier | BACnetObjectIdentifier | (Binary Input, 6) | R | R |
| Object_Name | CharacterString | “FilterSign” | R | R |
| Object_Type | BACnetObjectType | BINARY_INPUT (3) | R | R |
| Present_Value | BACnetBinaryPV | INACTIVE (0) / ACTIVE (1) | R | R |
| Description | CharacterString | - | O | - |
| Device_Type | CharacterString | - | O | - |
| Status_Flags | BACnetStatusFlags | {FALSE, FALSE/TRUE, FALSE, FALSE} | R | R |
| Event_State | BACnetEventState | STATE_NORMAL (0) | R | R |
| Reliability | BACnetReliability | NO_FAULT_DETECTED (0), UNRELIABLE_OTHER (7) | O | R |
| Out_Of_Service | BOOLEAN | FALSE | R | R |
| Polarity | BACnetPolarity | NORMAL (0) | R | R |
| Inactive_Text | CharacterString | "Disabled" | O | R |
| Active_Text | CharacterString | “Enabled” | O | R |
| Change_Of_State_Time | BACnetDatetime | - | O | - |
| Change_Of_State_Count | Unsigned | - | O | - |
| Time_Of_State_Count_Reset | BACnetDatetime | - | O | - |
| Elapsed_Active_Time | Unsigned | - | O | - |
| Time_Of_Active_Time_Reset | BACnetDatetime | - | O | - |
| Time_Delay | Unsigned | - | O | - |
| Notification_Class | Unsigned | - | O | - |
| Alarm_Value | BACnetBinaryPV | - | O | - |
| Event_Enable | BACnetEventTransitionBits | - | O | - |
| Acked_Transitions | BACnetEventTransitionBits | - | O | - |
| Notify_Type | BACnetNotifyType | - | O | - |
| Event_Time_Stamps | BACnetArray[N] of BACnetTimeStamp | - | O | - |
| Profile_Name | CharacterString | - | O | - |

© HMS Industrial Networks S.L.U - All rights reserved
This information is subject to change without notice

### 5.3.21 FilterReset (Binary Output Object Type)

It resets the filter signal.

| Property Identifier | Property Datatype | Value | ASHRAE | IBOX |
|---|---|---|---|---|
| Object_Identifier | BACnetObjectIdentifier | (Binary Output, 4) | R | R |
| Object_Name | CharacterString | “FilterReset” | R | R |
| Object_Type | BACnetObjectType | BINARY_OUTPUT (4) | R | R |
| Present_Value | BACnetBinaryPV | INACTIVE (0) / ACTIVE (1) | W | W |
| Description | CharacterString | - | O | - |
| Device_Type | CharacterString | - | O | - |
| Status_Flags | BACnetStatusFlags | {FALSE, FALSE, FALSE, FALSE} | R | R |
| Event_State | BACnetEventState | STATE_NORMAL (0) | R | R |
| Reliability | BACnetReliability | NO_FAULT_DETECTED (0) | O | R |
| Out_Of_Service | BOOLEAN | FALSE | R | R |
| Polarity | BACnetPolarity | NORMAL (0) | R | R |
| Inactive_Text | CharacterString | "Normal" | O | R |
| Active_Text | CharacterString | “Reset" | O | R |
| Change_Of_State_Time | BACnetDatetime | - | O | - |
| Change_Of_State_Count | Unsigned | - | O | - |
| Time_Of_State_Count_Reset | BACnetDatetime | - | O | - |
| Elapsed_Active_Time | Unsigned | - | O | - |
| Time_Of_Active_Time_Reset | BACnetDatetime | - | O | - |
| Minimum_Off_Time | Unsigned32 | - | O | - |
| Minimum_On_Time | Unsigned32 | - | O | - |
| Priority_Array | BACnetPriorityArray | BACnetPriorityArray | R | R |
| Relinquish_Default | BACnetBinaryPV | INACTIVE (0) | R | R |
| Time_Delay | Unsigned | - | O | - |
| Notification_Class | Unsigned | - | O | - |
| Feedback_Value | BACnetBinaryPV | - | O | - |
| Event_Enable | BACnetEventTransitionBits | - | O | - |
| Acked_Transitions | BACnetEventTransitionBits | - | O | - |
| Notify_Type | BACnetNotifyType | - | O | - |
| Event_Time_Stamps | BACnetArray[N] of BACnetTimeStamp | - | O | - |
| Profile_Name | CharacterString | - | O | - |

© HMS Industrial Networks S.L.U - All rights reserved
This information is subject to change without notice

### 5.3.22 Occupancy (Multistate Value Object Type)

It indicates the use or not of the occupancy function. Check section 7.4 for more information.

| Property Identifier | Property Datatype | Value | ASHRAE | IBOX |
|---|---|---|---|---|
| Object_Identifier | BACnetObjectIdentifier | (Multi-state Output, 0) | R | R |
| Object_Name | CharacterString | “Occupancy” | R | R |
| Object_Type | BACnetObjectType | MULTISTATE_VALUE (19) | R | R |
| Present_Value | Unsigned | 1 ~ 3 | W | W |
| Description | CharacterString | - | O | - |
| Status_Flags | BACnetStatusFlags | {FALSE, FALSE, FALSE, FALSE} | R | R |
| Event_State | BACnetEventState | STATE_NORMAL (0) | R | R |
| Reliability | BACnetReliability | NO_FAULT_DETECTED (0) | O | R |
| Out_Of_Service | BOOLEAN | FALSE | R | R |
| Number_Of_States | Unsigned | 3 | R | R |
| State_Text | BACnetArray[N] of CharacterString | *Check **Occupancy setting table** below* | O | R |
| Priority_Array | BACnetPriorityArray | - | R | - |
| Relinquish_Default | Unsigned | - | R | - |
| Time_Delay | Unsigned | - | O | - |
| Notification_Class | Unsigned | - | O | - |
| Alarm_Value | Unsigned | - | O | - |
| Fault_Value | Unsigned | | O | - |
| Event_Enable | BACnetEventTransitionBits | - | O | - |
| Acked_Transitions | BACnetEventTransitionBits | - | O | - |
| Notify_Type | BACnetNotifyType | - | O | - |
| Event_Time_Stamps | BACnetArray[N] of BACnetTimeStamp | - | O | - |
| Profile_Name | CharacterString | - | O | - |

#### Occupancy values table

Check possible Occupancy values in the following correspondence table.

| Pesent_Value | Contents displayed in State_Text |
|---|---|
| 1 | Occupied |
| 2 | Unoccupied |
| 3 | Disabled |

© HMS Industrial Networks S.L.U - All rights reserved
This information is subject to change without notice

### 5.3.23 OccupiedCoolSetPoint (Analog Value Object Type)

It indicates the current Setpoint when when both Cool mode and Occupancy are enabled and the room is occupied. Check section 7.4 for more information.

| Property Identifier | Property Datatype | Value | ASHRAE | IBOX |
|---|---|---|---|---|
| Object_Identifier | BACnetObjectIdentifier | (Analog Value, 1) | R | R |
| Object_Name | CharacterString | "OccupiedCoolSetPoint" | R | R |
| Object_Type | BACnetObjectType | ANALOG_VALUE (2) | R | R |
| Present_Value | REAL | 16…32 ºC<br>60…90 ºF | R | R |
| Description | CharacterString | - | O | - |
| Status_Flags | BACnetStatusFlags | {FALSE, FALSE, FALSE, FALSE} | R | R |
| Event_State | BACnetEventState | STATE_NORMAL (0) | R | R |
| Reliability | BACnetReliability | NO_FAULT_DETECTED (0) | O | R |
| Out_Of_Service | BOOLEAN | FALSE | R | R |
| Update_Interval | Unsigned | - | O | - |
| Units ** | BACnetEngineeringUnits | Degrees Celsius (62)<br>Degrees Fahrenheit (64) | R | R |
| Min_Pres_Value | REAL | - | O | - |
| Max_Pres_Value | REAL | - | O | - |
| Resolution | REAL | - | O | - |
| COV_Increment | REAL | 0 | O | W |
| Time_Delay | Unsigned | - | O | - |
| Notification_Class | Unsigned | - | O | - |
| High_Limit | REAL | - | O | - |
| Low_Limit | REAL | - | O | - |
| Deadband | REAL | - | O | - |
| Limit_Enable | BACnetLimitEnable | - | O | - |
| Event_Enable | BACnetEventTransitionBits | - | O | - |
| Acked_Transitions | BACnetEventTransitionBits | - | O | - |
| Notify_Type | BACnetNotifyType | - | O | - |
| Event_Time_Stamps | BACnetArray[N] of BACnetTimeStamp | - | O | - |
| Profile_Name | CharacterString | - | O | - |

** Use of Celsius or Fahrenheit units can be selected throught the switch configuration. Check section 6.1 for more information.

© HMS Industrial Networks S.L.U - All rights reserved
This information is subject to change without notice

### 5.3.24 OccupiedHeatSetPoint (Analog Value Object Type)

It indicates the current Setpoint when both Heat mode and Occupancy are enabled and the room is occupied. Check section 7.4 for more information.

| Property Identifier | Property Datatype | Value | ASHRAE | IBOX |
|---|---|---|---|---|
| Object_Identifier | BACnetObjectIdentifier | (Analog Value, 2) | R | R |
| Object_Name | CharacterString | "OccupiedHeatSetPoint" | R | R |
| Object_Type | BACnetObjectType | ANALOG_VALUE (2) | R | R |
| Present_Value | REAL | 16…32 ºC<br>60…90 ºF | R | R |
| Description | CharacterString | - | O | - |
| Status_Flags | BACnetStatusFlags | {FALSE, FALSE, FALSE, FALSE} | R | R |
| Event_State | BACnetEventState | STATE_NORMAL (0) | R | R |
| Reliability | BACnetReliability | NO_FAULT_DETECTED (0) | O | R |
| Out_Of_Service | BOOLEAN | FALSE | R | R |
| Update_Interval | Unsigned | - | O | - |
| Units ** | BACnetEngineeringUnits | Degrees Celsius (62)<br>Degrees Fahrenheit (64) | R | R |
| Min_Pres_Value | REAL | - | O | - |
| Max_Pres_Value | REAL | - | O | - |
| Resolution | REAL | - | O | - |
| COV_Increment | REAL | 0 | O | W |
| Time_Delay | Unsigned | - | O | - |
| Notification_Class | Unsigned | - | O | - |
| High_Limit | REAL | - | O | - |
| Low_Limit | REAL | - | O | - |
| Deadband | REAL | - | O | - |
| Limit_Enable | BACnetLimitEnable | - | O | - |
| Event_Enable | BACnetEventTransitionBits | - | O | - |
| Acked_Transitions | BACnetEventTransitionBits | - | O | - |
| Notify_Type | BACnetNotifyType | - | O | - |
| Event_Time_Stamps | BACnetArray[N] of BACnetTimeStamp | - | O | - |
| Profile_Name | CharacterString | - | O | - |

** Use of Celsius or Fahrenheit units can be selected throught the switch configuration. Check section 6.1 for more information.

© HMS Industrial Networks S.L.U - All rights reserved
This information is subject to change without notice

### 5.3.25 UnoccupiedCoolSetPoint (Analog Value Object Type)

It indicates the current Setpoint when both Cool mode and Occupancy are enabled and the room is unoccupied. Check section 7.4 for more information.

| Property Identifier | Property Datatype | Value | ASHRAE | IBOX |
|---|---|---|---|---|
| Object_Identifier | BACnetObjectIdentifier | (Analog Value, 3) | R | R |
| Object_Name | CharacterString | "UnoccupiedCoolSetPoint" | R | R |
| Object_Type | BACnetObjectType | ANALOG_VALUE (2) | R | R |
| Present_Value | REAL | 16…32 ºC<br>60…90 ºF | R | R |
| Description | CharacterString | - | O | - |
| Status_Flags | BACnetStatusFlags | {FALSE, FALSE, FALSE, FALSE} | R | R |
| Event_State | BACnetEventState | STATE_NORMAL (0) | R | R |
| Reliability | BACnetReliability | NO_FAULT_DETECTED (0) | O | R |
| Out_Of_Service | BOOLEAN | FALSE | R | R |
| Update_Interval | Unsigned | - | O | - |
| Units ** | BACnetEngineeringUnits | Degrees Celsius (62)<br>Degrees Fahrenheit (64) | R | R |
| Min_Pres_Value | REAL | - | O | - |
| Max_Pres_Value | REAL | - | O | - |
| Resolution | REAL | - | O | - |
| COV_Increment | REAL | 0 | O | W |
| Time_Delay | Unsigned | - | O | - |
| Notification_Class | Unsigned | - | O | - |
| High_Limit | REAL | - | O | - |
| Low_Limit | REAL | - | O | - |
| Deadband | REAL | - | O | - |
| Limit_Enable | BACnetLimitEnable | - | O | - |
| Event_Enable | BACnetEventTransitionBits | - | O | - |
| Acked_Transitions | BACnetEventTransitionBits | - | O | - |
| Notify_Type | BACnetNotifyType | - | O | - |
| Event_Time_Stamps | BACnetArray[N] of BACnetTimeStamp | - | O | - |
| Profile_Name | CharacterString | - | O | - |

** Use of Celsius or Fahrenheit units can be selected throught the switch configuration. Check section 6.1 for more information.

© HMS Industrial Networks S.L.U - All rights reserved
This information is subject to change without notice

### 5.3.26 UnoccupiedHeatSetPoint (Analog Value Object Type)

It indicates the current Setpoint when both Heat mode and Occupancy are enabled and the room is unoccupied. Check section 7.4 for more information.

| Property Identifier | Property Datatype | Value | ASHRAE | IBOX |
|---|---|---|---|---|
| Object_Identifier | BACnetObjectIdentifier | (Analog Value, 4) | R | R |
| Object_Name | CharacterString | "UnoccupiedHeatSetPoint" | R | R |
| Object_Type | BACnetObjectType | ANALOG_VALUE (2) | R | R |
| Present_Value | REAL | 16…32 ºC<br>60…90 ºF | R | R |
| Description | CharacterString | - | O | - |
| Status_Flags | BACnetStatusFlags | {FALSE, FALSE, FALSE, FALSE} | R | R |
| Event_State | BACnetEventState | STATE_NORMAL (0) | R | R |
| Reliability | BACnetReliability | NO_FAULT_DETECTED (0) | O | R |
| Out_Of_Service | BOOLEAN | FALSE | R | R |
| Update_Interval | Unsigned | - | O | - |
| Units ** | BACnetEngineeringUnits | Degrees Celsius (62)<br>Degrees Fahrenheit (64) | R | R |
| Min_Pres_Value | REAL | - | O | - |
| Max_Pres_Value | REAL | - | O | - |
| Resolution | REAL | - | O | - |
| COV_Increment | REAL | 0 | O | W |
| Time_Delay | Unsigned | - | O | - |
| Notification_Class | Unsigned | - | O | - |
| High_Limit | REAL | - | O | - |
| Low_Limit | REAL | - | O | - |
| Deadband | REAL | - | O | - |
| Limit_Enable | BACnetLimitEnable | - | O | - |
| Event_Enable | BACnetEventTransitionBits | - | O | - |
| Acked_Transitions | BACnetEventTransitionBits | - | O | - |
| Notify_Type | BACnetNotifyType | - | O | - |
| Event_Time_Stamps | BACnetArray[N] of BACnetTimeStamp | - | O | - |
| Profile_Name | CharacterString | - | O | - |

** Use of Celsius or Fahrenheit units can be selected throught the switch configuration. Check section 6.1 for more information.

© HMS Industrial Networks S.L.U - All rights reserved
This information is subject to change without notice

### 5.3.27 OccupancyContinuousCheck (Binary Value Object Type)

It indicates if the system is continuously checking the setpoint and occupancy conditions. Check section 7.4 for more information.

| Property Identifier | Property Datatype | Value | ASHRAE | IBOX |
|---|---|---|---|---|
| Object_Identifier | BACnetObjectIdentifier | (Binary Value, 0) | R | R |
| Object_Name | CharacterString | “OccupancyContinuousCheck” | R | R |
| Object_Type | BACnetObjectType | BINARY_VALUE (5) | R | R |
| Present_Value | BACnetBinaryPV | INACTIVE (0) / ACTIVE (1) | W | W |
| Description | CharacterString | - | O | - |
| Status_Flags | BACnetStatusFlags | {FALSE, FALSE, FALSE, FALSE} | R | R |
| Event_State | BACnetEventState | STATE_NORMAL (0) | R | R |
| Reliability | BACnetReliability | NO_FAULT_DETECTED (0) | O | R |
| Out_Of_Service | BOOLEAN | FALSE | R | R |
| Inactive_Text | CharacterString | "Disabled" | O | R |
| Active_Text | CharacterString | “Enabled" | O | R |
| Change_Of_State_Time | BACnetDatetime | - | O | - |
| Change_Of_State_Count | Unsigned | - | O | - |
| Time_Of_State_Count_Reset | BACnetDatetime | - | O | - |
| Elapsed_Active_Time | Unsigned | - | O | - |
| Time_Of_Active_Time_Reset | BACnetDatetime | - | O | - |
| Minimum_Off_Time | Unsigned32 | - | O | - |
| Minimum_On_Time | Unsigned32 | - | O | - |
| Priority_Array | BACnetPriorityArray | BACnetPriorityArray | R | - |
| Relinquish_Default | BACnetBinaryPV | INACTIVE (0) | R | - |
| Time_Delay | Unsigned | - | O | - |
| Notification_Class | Unsigned | - | O | - |
| Alarm_Value | BACnetBinaryPV | - | O | - |
| Event_Enable | BACnetEventTransitionBits | - | O | - |
| Acked_Transitions | BACnetEventTransitionBits | - | O | - |
| Notify_Type | BACnetNotifyType | - | O | - |
| Event_Time_Stamps | BACnetArray[N] of BACnetTimeStamp | - | O | - |
| Profile_Name | CharacterString | - | O | - |

© HMS Industrial Networks S.L.U - All rights reserved
This information is subject to change without notice

### 5.3.28 UnoccupiedDeadbandAction (Binary Value Object Type)

It indicates the action to be performed by the system when Unoccupancy is enabled and Room Temperature is within the deadband. Check section 7.4 for more information.

| Property Identifier | Property Datatype | Value | ASHRAE | IBOX |
|---|---|---|---|---|
| Object_Identifier | BACnetObjectIdentifier | (Binary Value, 1) | R | R |
| Object_Name | CharacterString | “UnoccupiedDeadbandAction” | R | R |
| Object_Type | BACnetObjectType | BINARY_VALUE (5) | R | R |
| Present_Value | BACnetBinaryPV | INACTIVE (0) / ACTIVE (1) | W | W |
| Description | CharacterString | - | O | - |
| Status_Flags | BACnetStatusFlags | {FALSE, FALSE, FALSE, FALSE} | R | R |
| Event_State | BACnetEventState | STATE_NORMAL (0) | R | R |
| Reliability | BACnetReliability | NO_FAULT_DETECTED (0) | O | R |
| Out_Of_Service | BOOLEAN | FALSE | R | R |
| Inactive_Text | CharacterString | "Off" | O | R |
| Active_Text | CharacterString | “CurrentMode" | O | R |
| Change_Of_State_Time | BACnetDatetime | - | O | - |
| Change_Of_State_Count | Unsigned | - | O | - |
| Time_Of_State_Count_Reset | BACnetDatetime | - | O | - |
| Elapsed_Active_Time | Unsigned | - | O | - |
| Time_Of_Active_Time_Reset | BACnetDatetime | - | O | - |
| Minimum_Off_Time | Unsigned32 | - | O | - |
| Minimum_On_Time | Unsigned32 | - | O | - |
| Priority_Array | BACnetPriorityArray | BACnetPriorityArray | R | - |
| Relinquish_Default | BACnetBinaryPV | INACTIVE (0) | R | - |
| Time_Delay | Unsigned | - | O | - |
| Notification_Class | Unsigned | - | O | - |
| Alarm_Value | BACnetBinaryPV | - | O | - |
| Event_Enable | BACnetEventTransitionBits | - | O | - |
| Acked_Transitions | BACnetEventTransitionBits | - | O | - |
| Notify_Type | BACnetNotifyType | - | O | - |
| Event_Time_Stamps | BACnetArray[N] of BACnetTimeStamp | - | O | - |
| Profile_Name | CharacterString | - | O | - |

© HMS Industrial Networks S.L.U - All rights reserved
This information is subject to change without notice

### 5.3.29 LockRemoteControl (Binary Value Object Type)

It is used to lock or unlock the Mitsubishi Heavy Industries wired Remote Controller.

| Property Identifier | Property Datatype | Value | ASHRAE | IBOX |
|---|---|---|---|---|
| Object_Identifier | BACnetObjectIdentifier | (Binary Value, 2) | R | R |
| Object_Name | CharacterString | “LockRemoteControl” | R | R |
| Object_Type | BACnetObjectType | BINARY_VALUE (5) | R | R |
| Present_Value | BACnetBinaryPV | INACTIVE (0) / ACTIVE (1) | W | W |
| Description | CharacterString | - | O | - |
| Status_Flags | BACnetStatusFlags | {FALSE, FALSE, FALSE, FALSE} | R | R |
| Event_State | BACnetEventState | STATE_NORMAL (0) | R | R |
| Reliability | BACnetReliability | NO_FAULT_DETECTED (0) | O | R |
| Out_Of_Service | BOOLEAN | FALSE | R | R |
| Inactive_Text | CharacterString | "Unlocked" | O | R |
| Active_Text | CharacterString | “Locked" | O | R |
| Change_Of_State_Time | BACnetDatetime | - | O | - |
| Change_Of_State_Count | Unsigned | - | O | - |
| Time_Of_State_Count_Reset | BACnetDatetime | - | O | - |
| Elapsed_Active_Time | Unsigned | - | O | - |
| Time_Of_Active_Time_Reset | BACnetDatetime | - | O | - |
| Minimum_Off_Time | Unsigned32 | - | O | - |
| Minimum_On_Time | Unsigned32 | - | O | - |
| Priority_Array | BACnetPriorityArray | BACnetPriorityArray | R | - |
| Relinquish_Default | BACnetBinaryPV | INACTIVE (0) | R | - |
| Time_Delay | Unsigned | - | O | - |
| Notification_Class | Unsigned | - | O | - |
| Alarm_Value | BACnetBinaryPV | - | O | - |
| Event_Enable | BACnetEventTransitionBits | - | O | - |
| Acked_Transitions | BACnetEventTransitionBits | - | O | - |
| Notify_Type | BACnetNotifyType | - | O | - |
| Event_Time_Stamps | BACnetArray[N] of BACnetTimeStamp | - | O | - |
| Profile_Name | CharacterString | - | O | - |

© HMS Industrial Networks S.L.U - All rights reserved
This information is subject to change without notice

### 5.3.30 OutdoorTemp Status (Analog Input Object Type)

Outdoor temperature measured at outdoor unit. This value is only available if unit is setup in Master mode (see switch configuration in installation sheet).

| Property Identifier | Property Datatype | Value | ASHRAE | IBOX |
|---|---|---|---|---|
| Object_Identifier | BACnetObjectIdentifier | (Analog Input, 8) | R | R |
| Object_Name | CharacterString | “OutdoorTemp Status” | R | R |
| Object_Type | BACnetObjectType | ANALOG_INPUT (0) | R | R |
| Present_Value | REAL | | R | R |
| Description | CharacterString | - | O | - |
| Device_Type | CharacterString | - | O | - |
| Status_Flags | BACnetStatusFlags | {FALSE, FALSE/TRUE, FALSE, FALSE} | R | R |
| Event_State | BACnetEventState | STATE_NORMAL (0) | R | R |
| Reliability | BACnetReliability | NO_FAULT_DETECTED (0), UNRELIABLE_OTHER (7) | O | R |
| Out_Of_Service | BOOLEAN | FALSE/TRUE | R | R |
| Update_Interval | Unsigned | - | O | - |
| Units | BACnetEngineeringUnits | - | R | R |
| Min_Pres_Value | REAL | - | O | - |
| Max_Pres_Value | REAL | - | O | - |
| Resolution | REAL | - | O | - |
| COV_Increment | REAL | 0 | O | W |
| Time_Delay | Unsigned | - | O | - |
| Notification_Class | Unsigned | - | O | - |
| High_Limit | REAL | - | O | - |
| Low_Limit | REAL | - | O | - |
| Deadband | REAL | - | O | - |
| Limit_Enable | BACnetLimitEnable | - | O | - |
| Event_Enable | BACnetEventTransitionBits | - | O | - |
| Acked_Transitions | BACnetEventTransitionBits | - | O | - |
| Notify_Type | BACnetNotifyType | - | O | - |
| Event_Time_Stamps | BACnetArray[N] of BACnetTimeStamp | - | O | - |
| Profile_Name | CharacterString | - | O | - |

© HMS Industrial Networks S.L.U - All rights reserved
This information is subject to change without notice

### 5.3.31 CenterRemote (Multistate Input Object Type)

It indicates the current status of the center and remote control.

| Property Identifier | Property Datatype | Value | ASHRAE | IBOX |
|---|---|---|---|---|
| Object_Identifier | BACnetObjectIdentifier | (Multi-state Input, 9) | R | R |
| Object_Name | CharacterString | “CenterRemote” | R | R |
| Object_Type | BACnetObjectType | MULTISTATE_INPUT(13) | R | R |
| Present_Value | Unsigned | 1 ~ 6 | R | R |
| Description | CharacterString | - | O | - |
| Device_Type | CharacterString | - | O | - |
| Status_Flags | BACnetStatusFlags | {FALSE, FALSE, FALSE, FALSE} | R | R |
| Event_State | BACnetEventState | STATE_NORMAL (0) | R | R |
| Reliability | BACnetReliability | NO_FAULT_DETECTED (0) | O | R |
| Out_Of_Service | BOOLEAN | FALSE | R | R |
| Number_Of_States | Unsigned | 6 | R | R |
| State_Text | BACnetArray[N] of CharacterString | *Check **Center Remote table** below.* | O | R |
| Time_Delay | Unsigned | - | O | - |
| Notification_Class | Unsigned | - | O | - |
| Alarm_Values | List of Unsigned | - | O | - |
| Fault_Values | List of Unsigned | - | O | - |
| Event_Enable | BACnetEventTransitionBits | - | O | - |
| Acked_Transitions | BACnetEventTransitionBits | - | O | - |
| Notify_Type | BACnetNotifyType | - | O | - |
| Event_Time_Stamps | BACnetArray[N] of BACnetTimeStamp | - | O | - |
| Profile_Name | CharacterString | - | O | - |

#### Center Remote values table

Check possible Occupancy values in the following correspondence table.

| Pesent_Value | Contents displayed in State_Text |
|---|---|
| 1 | Center I |
| 2 | Remote I |
| 3 | Center/Remote I |
| 4 | Center II |
| 5 | Remote II |
| 6 | Center/Remote II |

© HMS Industrial Networks S.L.U - All rights reserved
This information is subject to change without notice

# 6 Connections and switches

## 6.1 *Connect to the Remote Controller bus*

Disconnect the Mitsubishi Heavy Industries system from Mains Power

Connect the interface to XY bus in any point of the bus. The XY bus is the bus that connects the AC indoor unit and the wired remote controller, is a two-wire bus connecting terminals XY of both. This XY connection has no specific polarity.

⚠ **Important**: If a wired remote controller of the AC manufacturer is connected in the same bus, communication may shut down. In case this happens, please use the USB connector to power the device to overcome this situation.

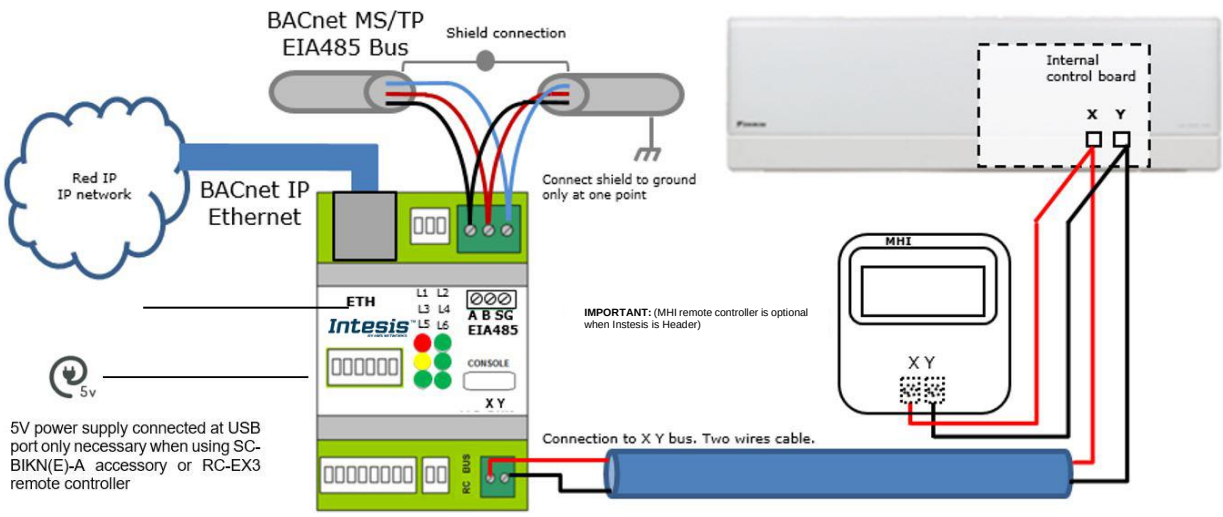


**Connection diagram**

If a Mitsubishi Heavy Industries remote controller (RC) is present and connected to the XY bus, there are two configuration options:

- If we want to use the RC as master, its PCB switch must be set as Master and the INBACMHI001R000 must be configured as Slave.
- If we want to use the RC as slave, its PCB switch must be set as Slave and the INBACMHI001R000 must be configured as Master.

**SW4 – Master/Slave settings**

| Binary value $b_1 \ldots b_0$ | Decimal value | Switches 1 2 | Description |
|---|---|---|---|
| 0x | 0 | ↓ x | Slave in X-Y bus (default value) |
| 1x | 1 | ↑ x | Master in X-Y bus |

**SW4 – Vanes Up-Down settings**

| Binary value $b_1 \ldots b_0$ | Decimal value | Switches 1 2 | Description |
|---|---|---|---|
| x0 | 0 | x ↓ | Indoor unit has no Vanes Up-Down (default value) |
| x1 | 1 | x ↑ | Indoor unit has Vanes Up-Down |

Use **SW3** for the Celsius/Fahrenheit degrees selection.

**SW3 - Celsius/Fahrenheit selection**

| Binary value $b_7 \ldots b_0$ | Decimal value | Switches 1 2 3 4 5 6 7 8 | Description |
|---|---|---|---|

© HMS Industrial Networks S.L.U - All rights reserved
This information is subject to change without notice

| | | | |
|---|---|---|---|
| **xxxx0xxx** | **0** | **x x x x ↓ x x x** | Celsius degrees (default value) |
| **xxxx1xxx** | **1** | **x x x x ↑ x x x** | Fahrenheit degrees |

⚠ ***Important***: Remember that switch changes only apply after an Intesis power cycle

## 6.2 *Connect to BACnet MS/TP*

Connect the EIA485 bus wires to the plug-in terminal block (EIA485) of INBACMHI001R000; respect the polarity on this connection (A+ and B-).

Connect the ground signal to the plug-in terminal block (SG).

Respect the maximum distance of 1.200 meters for the bus, no loop or star topologies are allowed for EIA485 bus.

**EIA-485 bus. Termination resistors and Fail-Safe Biasing mechanism**

EIA-485 bus requires a 120Ω terminator resistor at each end of the bus to avoid signal reflections.

In order to prevent fail status detections by the receivers, which are *"listening"* to the bus, when all the transmitters' outputs are in three-state (high impedance), a fail-safe biasing mechanism is required. This mechanism provides a safe status (a correct voltage level) in the bus when all the transmitters' outputs are in three-state.

The INBACMHI001R000 gateway includes an on-board terminator resistor of 120Ω that can be connected to the EIA-485 bus by using DIP-switch **SW1**.

Some BACnet MS/TP EIA-485 Master devices can provide also internal 120Ω terminator resistor and/or fail-safe biasing. Check the technical documentation of the Master device connected to the EIA-485 network in each case.

SW1 settings

| Binary value $b_2 \ldots b_0$ | Decimal value | Switches 1 2 3 | Description |
|---|---|---|---|
| **0xx** | **0** | **↓ x x** | EIA485 bus without termination resistor. The gateway is not at one end of the EIA485 bus (default value) |
| **1xx** | **1** | **↑ x x** | 120 Ω termination resistor active. The gateway is at one end of the EIA485 bus |
| **x00** | **0** | **x ↓ ↓** | No bus polarization |
| **x11** | **3** | **x ↑ ↑** | Bus polarization active |

Please, check configuration as well on **SW2** and **SW3** before connecting to BACnet MS/TP.

### 6.2.1 MS/TP MAC address switch configuration

MAC address can be configured using **SW2** DIP-Switch

| Binary value $b_7 \ldots b_0$ | Decimal value | Switches 1 2 3 4 5 6 7 8 | MAC address |
|---|---|---|---|
| **0000000x** | 0 | ↓ ↓ ↓ ↓ ↓ ↓ ↓ x | 0 |
| **1000000x** | 1 | ↑ ↓ ↓ ↓ ↓ ↓ ↓ x | 1 |
| **0100000x** | 2 | ↓ ↑ ↓ ↓ ↓ ↓ ↓ x | 2 |
| **1100000x** | 3 | ↑ ↑ ↓ ↓ ↓ ↓ ↓ x | 3 |
| **….** | …. | …. | … |
| **1011111x** | 125 | ↑ ↓ ↑ ↑ ↑ ↑ ↑ x | 125 |
| **0111111x** | 126 | ↓ ↑ ↑ ↑ ↑ ↑ ↑ x | 126 |
| **1111111x** | 127 | ↑ ↑ ↑ ↑ ↑ ↑ ↑ x | 127 |

The MAC address selected my affect on the Device Instance. If the "Auto Device Instance" is used, keep in mind that the Device Instance will be build using the "Device Instance Base" + the address selected in SWP2 P1-P7. Please, check section 7.5 for more information.

⚠ ***Important***: Remember that switch changes only apply after an Intesis power cycle

© HMS Industrial Networks S.L.U - All rights reserved
This information is subject to change without notice

### 6.2.2 MS/TP activation and baudrate

Select the right baudrate for BACnet MS/TP communication using switch **SW3**.

| Binary value $b_7...b_0$ | Decimal value | Switches 1 2 3 4 5 6 7 8 | Description |
|---|---|---|---|
| **0xxxxxxx** | **0** | ↓ x x x x x x x | BACnet MS/TP active (default value) |
| **1xxxxxxx** | **1** | ↑ x x x x x x x | BACnet IP active |
| **x000xxxx** | **0** | x ↓ ↓ ↓ x x x x | Autobaudrate (default value) * |
| **x100xxxx** | **1** | x ↑ ↓ ↓ x x x x | 9600 bps |
| **x010xxxx** | **2** | x ↓ ↑ ↓ x x x x | 192000 bps |
| **x110xxxx** | **3** | x ↑ ↑ ↓ x x x x | 38400 bps |
| **x001xxxx** | **4** | x ↓ ↓ ↑ x x x x | 57600 bps |
| **x101xxxx** | **5** | x ↑ ↓ ↑ x x x x | 76800 bps |
| **x011xxxx** | **6** | x ↓ ↑ ↑ x x x x | 115200 bps |
| **x111xxxx** | **7** | x ↑ ↑ ↑ x x x x | Autobaudrate * |
| **xxxx0xxx** | **0** | x x x x ↓ x x x | Celsius degrees (default value) |
| **xxxx1xxx** | **1** | x x x x ↑ x x x | Fahrenheit degrees |

* Note: If Autobaudrate is selected, the INBACMHI001R000 will look for another BACnet MS/TP device with a fixed baudrate in order to match this value. Once detected, the baudrate will not be modified until a device reset is produced.

## 6.3 *Connect to BACnet IP*

Connect the RJ45 connector to the Ethernet connection (ETH) of INBACMHI001R000.

Respect same recommendations as per any other Ethernet communication network.

Remember to activate the IP interface through the **SW3** switch.

| Binary value $b_7...b_0$ | Decimal value | Switches 1 2 3 4 5 6 7 8 | Description |
|---|---|---|---|
| **0xxxxxxx** | **0** | ↓ x x x x x x x | BACnet MS/TP active (default value) |
| **1xxxxxxx** | **1** | ↑ x x x x x x x | BACnet IP active |

By default, the INBACMHI001R000 comes with a static IP address: **192.168.100.246**.

In order to change it, please use the configuration tool and select either DHCP or another static IP (recommended) that suits your integration project requirements. Check section 7.5 for more information.

### 6.3.1 BACnet Device Instance

If the “Auto Device Instance” is used, keep in mind that the Device Instance will be build using the “Device Instance Base” + the address selected in SWP2 P1-P7.

| Binary value $b_7...b_0$ | Decimal value | Switches 1 2 3 4 5 6 7 8 | MAC address |
|---|---|---|---|
| **0000000x** | 0 | ↓ ↓ ↓ ↓ ↓ ↓ ↓ x | 0 |
| **1000000x** | 1 | ↑ ↓ ↓ ↓ ↓ ↓ ↓ x | 1 |
| **0100000x** | 2 | ↓ ↑ ↓ ↓ ↓ ↓ ↓ x | 2 |
| **1100000x** | 3 | ↑ ↑ ↓ ↓ ↓ ↓ ↓ x | 3 |
| **….** | …. | **….** | … |
| **1011111x** | 125 | ↑ ↓ ↑ ↑ ↑ ↑ ↑ x | 125 |
| **0111111x** | 126 | ↓ ↑ ↑ ↑ ↑ ↑ ↑ x | 126 |
| **1111111x** | 127 | ↑ ↑ ↑ ↑ ↑ ↑ ↑ x | 127 |

⚠ ***Important***: Remember that switch changes only apply after an Intesis power cycle

© HMS Industrial Networks S.L.U - All rights reserved
This information is subject to change without notice

# 7 Set-up process and troubleshooting

## 7.1 *Pre-requisites*

In a BACnet MS/TP integration, it is necessary to have the BACnet MS/TP Master device operative and well connected to the BACnet MS/TP port of the INBACMHI001R000.

In a BACnet IP integration, it is necessary to have the BACnet IP client operative and well connected to the IP network and the INBACMHI001R000 connected to this same IP network through the ETH port.

Items supplied by HMS Networks for this integration are:

- Intesis INBACMHI001R000 interface with Mitsubishi Heavy Industries AC external protocol firmware loaded.
- Specific connection cable to connect Mitsubishi Heavy Industries AC unit with INBACMHI001R000 gateway.
- MiniUSB cable for console communication and testing power supply usage.
- Product documentation.

## 7.2 *Physical checking*

First point to look at to make sure that gateway is working properly is to check physical connections:

1.- Make sure that the supplied cable is correctly connected between the AC unit and the gateway. INBACMHI001R000 needs to be connected to the AC unit or externaly powered before starting the device configuration. USB port can be used, along with an external USB power converter, to power the device for testing purposes if the AC unit is not present.

2.- Check that the AC unit is connected to mains.

3.- If using BACnet MS/TP, check the EIA485 connection from the gateway to the BACnet MS/TP. Remember to verify polarity and terminal resistors configuration. If using BACnet IP, check the IP network connections.

## 7.3 *LED status*

On start up, all leds blink once and then turn off. After that, depending on the type of connection (MS/TP or IP) and the processes carried out, LED status may change.

Please, check the table below for more information:

| LED | Status | Description |
|---|---|---|
| **L1** (red) | ON Steady | AC communication error |
| | Blinking | AC error |
| | Off | No errors present |
| **L5** (green) | ON Steady | BACnet MS/TP link |
| | Blinking | Activity on the BACnet MS/TP bus |
| **L6** (green) | ON Steady | Ethernet link |
| | Blinking | Activity on BACnet IP |
| **L1+L4+L5** | Blinking | Device in Bootloader mode |
| **All** | Blinking | Fatal Error |
| **All** | On Steady 1 sec | On start up (for testing purposes) |

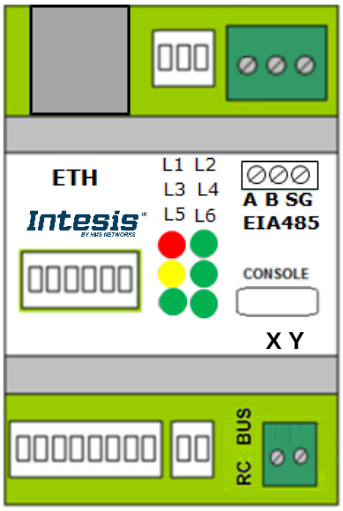


© HMS Industrial Networks S.L.U - All rights reserved
This information is subject to change without notice

## 7.4 *Occupancy*

Occupancy function is used to determine how the Air Conditioner unit will be set depending on the presence or absence of people in the room. Remember that the occupancy signal needs to be fed by an external sensor which indicates if there is presense or not (occupancy). This signal is processed directly in the Intesis and modifies 3 parameters from the AC system: Setpoint, Mode and On/Off.

In order to adjust the settings to the current mode (Heat or Cool), the gateway offers 6 different BACnet objects:

- OccupiedCoolSetPoint
- OccupiedHeatSetPoint
- UnoccupiedCoolSetPoint
- UnoccupiedHeatSetPoint
- OccupancyContinousCheck
- UnoccupiedDeadbandAction

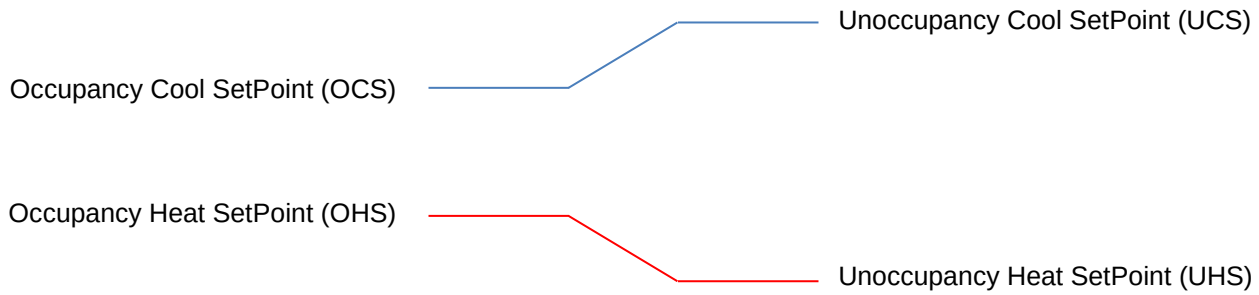


***Occupancy/Unoccupancy Cool Setpoint (OCS/UCS)*:** Default value for setpoint temperature to be set when Occupancy/Unoccupancy is enabled and current mode is cool. UCS must always be greater or equal to OCS. Difference between OCS and OHS must be greater or equal to 2ºC/4ºF.

***Occupancy/Unoccupancy Heat Setpoint (OHS/UHS)*:** Default value for setpoint temperature to be set when Occupancy/Unoccupancy is enabled and current mode is heat. UHS must always be smaller or equal to OHS. Difference between OCS and OHS must be greater or equal to 2ºC/4ºF.

**Occupancy Continous check:** This checkbox is used to determine if the gateway will check the occupancy conditions constantly (check) or not (unchecked) by default. That means that with the the checkbox active, conditions are checked on each change of the temperature too, while if unchecked, this is only checked when the occupancy status changes.

**Unoccupied Deadband Action:** This determines the action to be taken while the ambient temperature is in between the deadband. If unchecked, indoor unit will turn off and if checked it will remain on.

When **occupancy mode is active** (there is presence in the room), according to current room temperature, **mode**, **setpoint** and **on/off** will be set to:

| Condition | Setpoint | Mode | On/Off |
|---|---|---|---|
| Room temperature > OCS | Current OCS value | Cool | On |
| Room temperature < OHS | Current OHS value | Heat | On |
| OCS < Room temperature > OHS | OCS/OHS depending on current mode<br>(If Fan or Dry mode is active, no setpoint is sent) | Current mode | On |

When **unoccupancy mode is active** (there is no presence in the room), according to current room temperature, **mode**, **setpoint** and **on/off** will be set to:

© HMS Industrial Networks S.L.U - All rights reserved
This information is subject to change without notice

| Condition | Setpoint | Mode | On/Off |
|---|---|---|---|
| Room temperature > OCS | Current UCS value | Cool | On |
| Room temperature < OHS | Current UHS value | Heat | On |
| OCS < Room temperature > OHS | UCS/UHS depending on current mode<br>(If Fan or Dry mode is active, no setpoint is sent) | Current mode | On<br>(Deadband action =1) |
| | | | Off<br>(Deadband action =0) |

These checks will be done each time the indoor unit occupancy status is changed, and if ***check continuously*** checkbox is checked, also each time the room temperature changes.

The configuration set on the occupany signals is applied from the very first moment the occupancy signal is enabled until the user changes the setpoint, mode or the On/Off signal, which disables occupancy functionality.

© HMS Industrial Networks S.L.U - All rights reserved
This information is subject to change without notice

## 7.5 *Configuration tool*

In order to check the status of the device, signals values and general configuration, the INBACMHI001R000 includes a configuration tool. This tool is accessible only through the Ethernet port, so keep in mind that you need to switch **SW3** P1 'ON'.

By default the device comes with a static IP, so please check that you are in the same network domain in order to connect. The default IP is: **192.168.100.246**.

### 7.5.1 Home

Once you reach the page, remember to login with your user and password. To access the login site, click on "User" or use the drop-down menu on the top right corner for user selection.

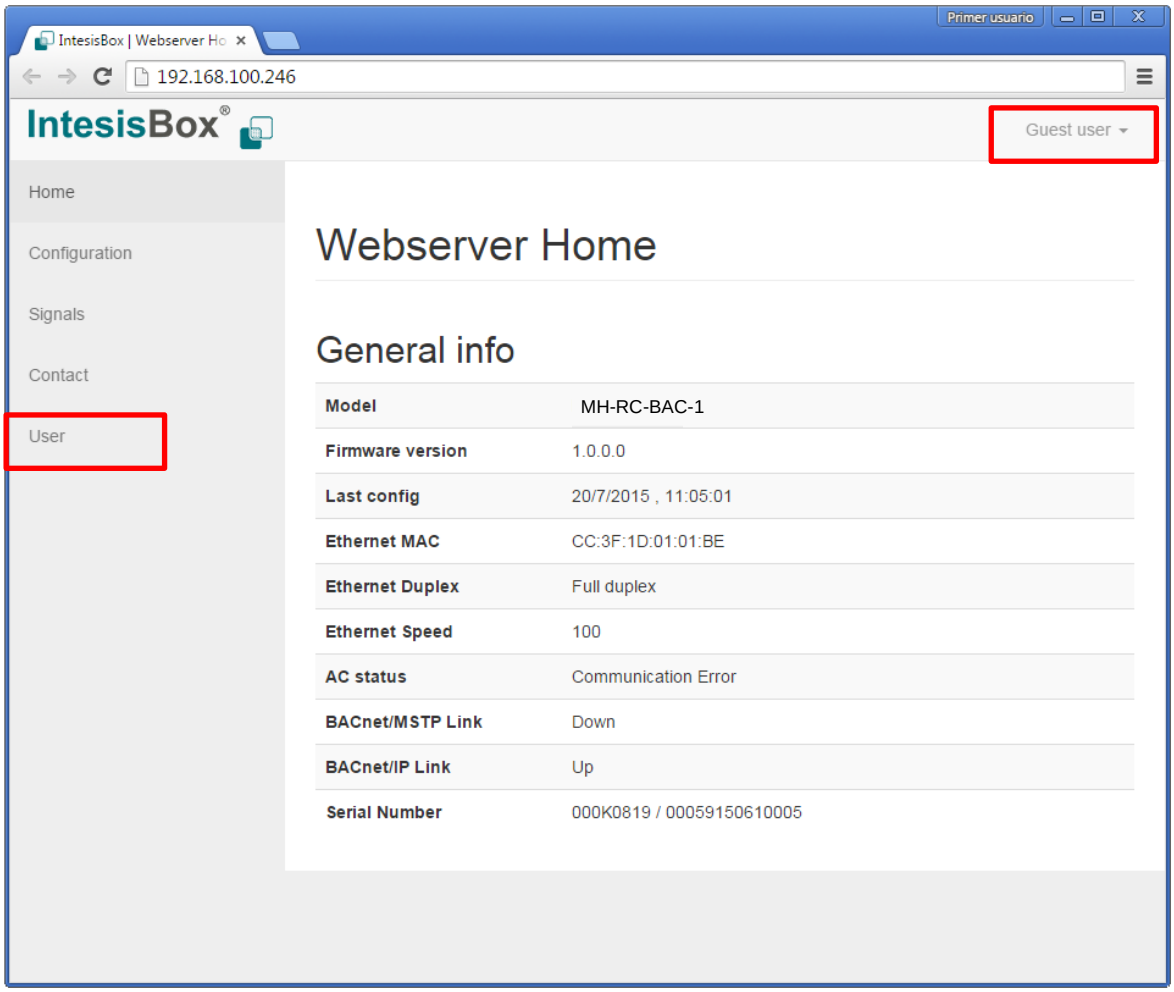


There are two access levels: ***admin*** and ***operator***. The default password value for each user is ***admin*** ➔ admin and ***operator*** ➔ operator.

Admin has total control on the device configuration and it can control the AC unit from the web app itself. On the contrary, operator can only read information from the current configuration and can operate the AC. Priority used when using the operator mode is always set to 8.

**IMPORTANT:** Once configuration is done, we recommend changing the passwords to ensure access control on the gateway.

© HMS Industrial Networks S.L.U - All rights reserved
This information is subject to change without notice

### 7.5.2 Configuration

On the configuration section, general **BACnet settings**, specific **BACnet MS/TP** and **BACnetIP settings**, **IP seetings** and **AC settings** can be configured. Each type of parameter is grouped in different blocks.

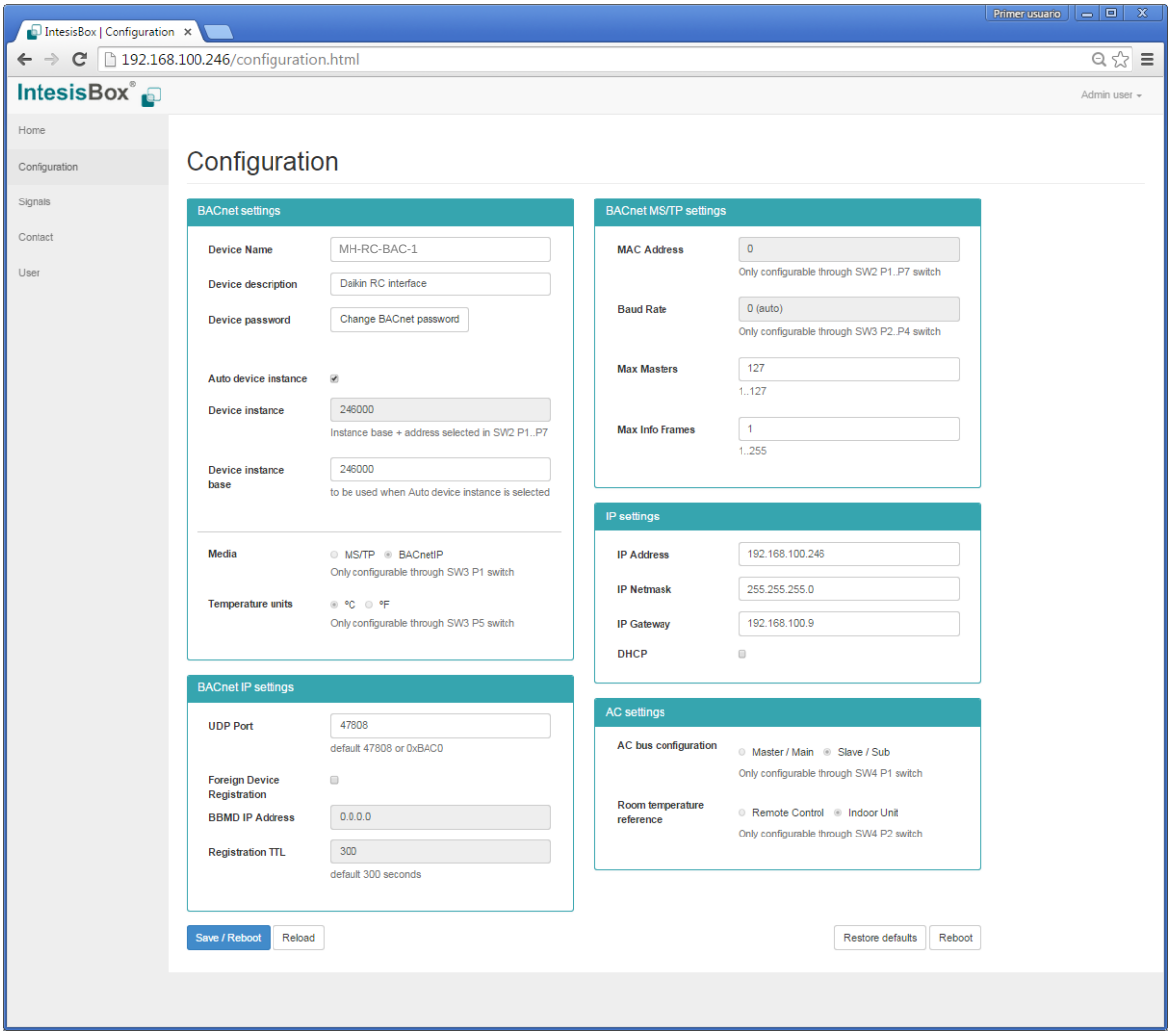


### 7.5.3 Signals

On this section a complete list of the available BACnet objects, their **type**, **Object Instance**, **priority** and current **value** is shown. Clinking on the "**Edit**" button, users will be able to command the system having feedback from both BACnet and AC system.

It also allows continuous monitoring of the current status of the variables. The refresh time for the AC information is shown using a progression bar in the top and the bottom of the signals list.

© HMS Industrial Networks S.L.U - All rights reserved
This information is subject to change without notice

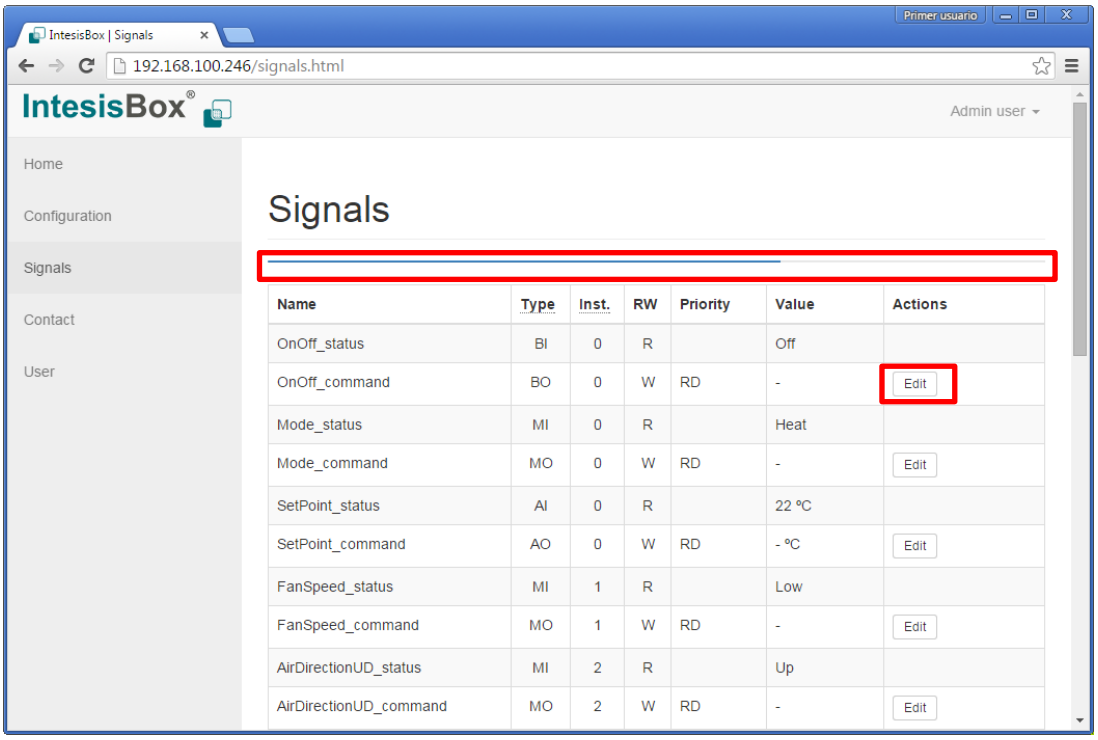


When you click on “Edit”, you will have the change of introducing a new **value** to be applied and also the **priority**.

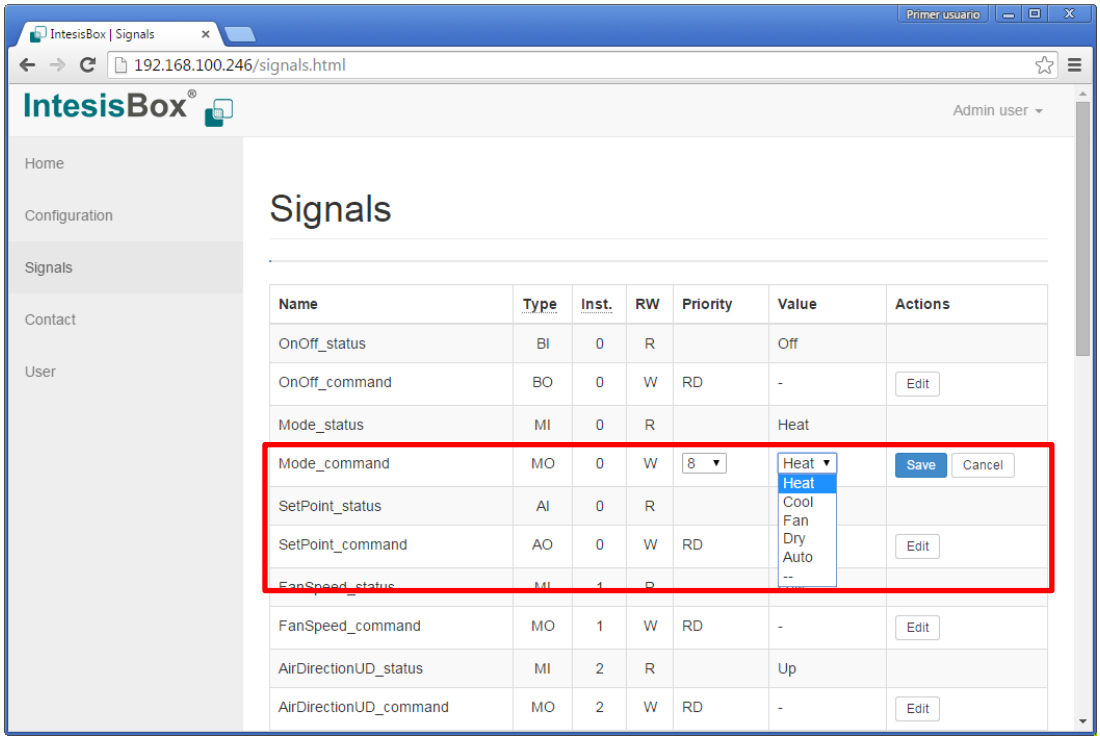


**NOTE:** If you want to relinquish the selected priority, please use the ‘--‘ command.

# 8 AC Unit Types compatibility

Please, check compatibility list at to know which Mitsubishi Heavy Industries units are compatible with our gateway.

https://www.intesis.com/docs/compatibilities/inxxxmhi001rx00_compatibility

© HMS Industrial Networks S.L.U - All rights reserved
This information is subject to change without notice

# 9 Mechanical & electrical characteristics

| | |
|---|---|
| **Enclosure** | Plastic, type PC (UL 94 V-0). Dimensions: 93mm x 53mm x 58mm. Weight: 85 g |
| **Color** | Light Grey. RAL 7035. |
| **Power supply** | 5VDC mini-USB power source, 250mA<br>*Required only when using RC-EX3 remote controller and/or SC-BIKN(E)-A accessory |
| **Terminal wiring (for power supply and low-voltage signals)** | Per terminal: solid wires or stranded wires (twisted or with ferrule)<br>1 core: 0.5 … 2.5mm$^2$<br>2 cores: 0.5 … 1.5mm$^2$<br>3 cores: not permitted |
| **Console Port** | Mini USB port for console usage |
| **Mounting** | Wall.<br>DIN rail EN60715 TH35. |
| **BACnet MS/TP port** | 1 x EIA485 Plug-in screw terminal block (2 poles + GND) |
| **BACnet IP port** | 1 x Ethernet 100BT RJ45. |
| **LED indicators** | 6 x Gateway/Communication status |
| **Operational temperature** | 0°C to +40°C |
| **Operational humidity** | 5% to 95%, non-condensing |
| **Isolation Voltage** | *4000 VDC (between AC unit and EIA-485)*<br>*1000 VDC (between AC unit and USB)* |
| **Protection** | IP20 (IEC60529). |
| **RoHS conformity** | Compliant with RoHS directive (2002/95/CE). |

# 10 Dimensions

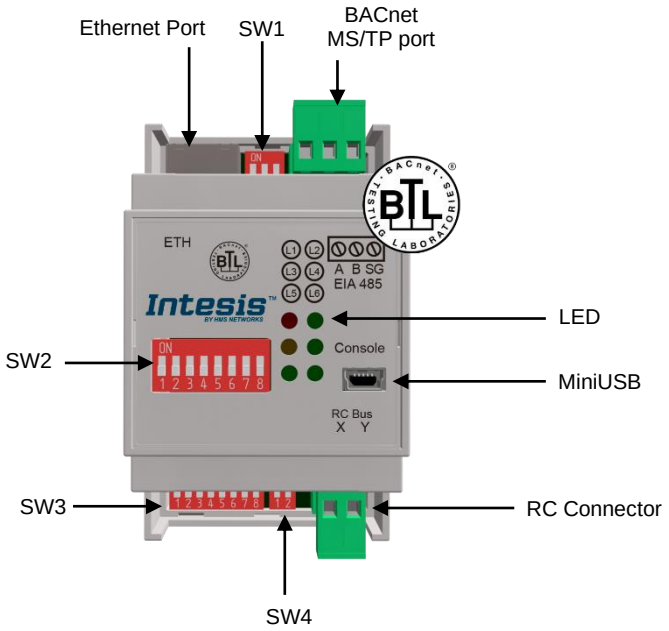


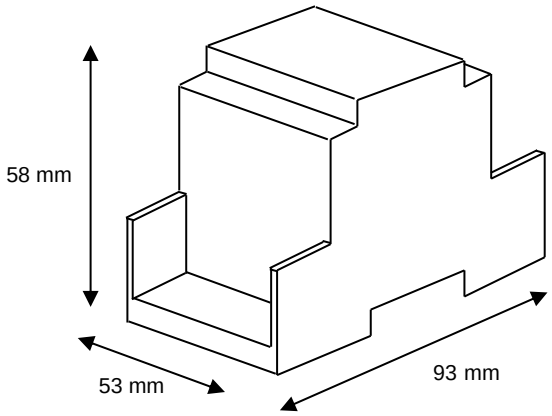


© HMS Industrial Networks S.L.U - All rights reserved
This information is subject to change without notice

# 11 Error codes

Below you can find a list of error codes from Mitsubishi Heavy Industries air conditioning system.

| ErrorCode | Error CodeM | Error in RC | Error Description |
|---|---|---|---|
| 0 | 01 | N/A | No active error |
| -1 | 02 | Com Err. | Comm Error between INBACMHI001R000 and MHI Indoor Unit |
| 1 | 03 | E1 | Remote controller communication error |
| 2 | 04 | E2 | Duplicated indoor unit address |
| 3 | 05 | E3 | Outdoor unit signal line error |
| 5 | 07 | E5 | Communication error during operation |
| 6 | 08 | E6 | Indoor heat exchanger temperature thermistor anomaly |
| 7 | 09 | E7 | Indoor return air temperature thermistor anomaly |
| 8 | 10 | E8 | Heating overload operation |
| 9 | 11 | E9 | Drain trouble |
| 10 | 12 | E10 | Excessive number of indoor units (more than 17) by controlling one remote controller |
| 12 | 14 | E12 | Address setting error by mixed setting method |
| 14 | 16 | E14 | Communication error between master and slave indoor units |
| 16 | 18 | E16 | Indoor fan motor anomaly |
| 19 | 21 | E19 | Indoor unit operation check, drain motor check setting error |
| 28 | 30 | E28 | Remote controller temperature thermistor anomaly |
| 30 | 32 | E30 | Unmatched connection of indoor and outdoor unit |
| 31 | 33 | E31 | Duplicated outdoor unit address No. |
| 32 | 34 | E32 | Open L3 Phase on power supply at primary side |
| 33 | 35 | E33 | Inverter primary current error |
| 35 | 37 | E35 | Cooling overload operation |
| 36 | 38 | E36 | Discharge pipe temperature error |
| 37 | 39 | E37 | Outdoor heat exchanger temperature thermistor anomaly |
| 38 | 40 | E38 | Outdoor/Ambient air temperature thermistor anomaly |
| 39 | 41 | E39 | Discharge pipe temperature thermistor anomaly |
| 40 | 42 | E40 | High pressure error |
| 41 | 43 | E41 | Power transistor overheat |
| 42 | 44 | E42 | Current cut |
| 43 | 45 | E43 | Excessive number of indoor units connected, excessive total capacity of connection |
| 45 | 47 | E45 | Communication error between inverter PCB and outdoor control PCB |
| 46 | 48 | E46 | Mixed address setting methods coexistent in same network |
| 47 | 49 | E47 | Inverter over-current error |
| 48 | 50 | E48 | Outdoor DC fan motor anomaly |
| 49 | 51 | E49 | Low pressure anomaly |
| 51 | 53 | E51 | Inverter anomaly |

© HMS Industrial Networks S.L.U - All rights reserved
This information is subject to change without notice

| | | | |
|---|---|---|---|
| 53 | 55 | E53 | Suction pipe temperature thermistor anomaly |
| 54 | 56 | E54 | High/Low pressure sensor anomaly |
| 55 | 57 | E55 | Underneath temperature thermistor anomaly |
| 56 | 58 | E56 | Power transistor temperature thermistor anomaly |
| 57 | 59 | E57 | Insufficient in refrigerant amount or detection of service valve closure |
| 58 | 60 | E58 | Anomalous compressor by loss of synchronism |
| 59 | 61 | E59 | Compressor startup failure |
| 60 | 62 | E60 | Rotor position detection failure / Anomalous compressor rotor lock |
| 61 | 63 | E61 | Communication error between the master unit and slave units |
| 63 | 65 | E63 | Emergency stop |

In case you detect an error code not listed, contact your nearest Mitsubishi Heavy Industries technical support service for more information on the error meaning.

© HMS Industrial Networks S.L.U - All rights reserved
This information is subject to change without notice