BACnet MS/TP Server

Midea Air Conditioning

Compatible with Commercial & VRF air conditioners commercialized by Midea

USER MANUAL

Issue date: 12/2025 v2.7 ENGLISH

14 rue Edouard Petit
42000 St-Etienne

Tel : +33 477 92 03 56
Email : contact@rg2i.com
www.rg2i.com

Important User Information

Disclaimer

The information in this document is for informational purposes only. Please inform HMS Industrial Networks of any inaccuracies or omissions found in this document. HMS Industrial Networks disclaims any responsibility or liability for any errors that may appear in this document.

HMS Industrial Networks reserves the right to modify its products in line with its policy of continuous product development. The information in this document shall therefore not be construed as a commitment on the part of HMS Industrial Networks and is subject to change without notice. HMS Industrial Networks makes no commitment to update or keep current the information in this document.

The data, examples and illustrations found in this document are included for illustrative purposes and are only intended to help improve understanding of the functionality and handling of the product. In view of the wide range of possible applications of the product, and because of the many variables and requirements associated with any particular implementation, HMS Industrial Networks cannot assume responsibility or liability for actual use based on the data, examples or illustrations included in this document nor for any damages incurred during installation of the product. Those responsible for the use of the product must acquire sufficient knowledge in order to ensure that the product is used correctly in their specific application and that the application meets all performance and safety requirements including any applicable laws, regulations, codes and standards. Further, HMS Industrial Networks will under no circumstances assume liability or responsibility for any problems that may arise as a result from the use of undocumented features or functional side effects found outside the documented scope of the product. The effects caused by any direct or indirect use of such aspects of the product are undefined and may include e.g. compatibility issues and stability issues.

© HMS Industrial Networks S.L.U. - All rights reserved
This information is subject to change without notice

Gateway for the integration of a Midea air conditioning unit in BACnet MS/TP enabled monitoring and control systems.

Compatible with Commercial & VRF air conditioners commercialized by Midea.

ORDER CODE	LEGACY ORDER CODE
INBACMID001I100	-

© HMS Industrial Networks S.L.U. - All rights reserved
This information is subject to change without notice

INDEX

1 Description 6
1.1 Introduction 6
1.2 Functionality 7
1.3 Capacity of Intesis 7
1.4 Quick Setup 7
2 Protocol Implementation Conformance Statement 8
2.1 BACnet Standardized Device Profile (Annex L): 8
2.2 Segmentation Capability: 8
2.3 Data Link Layer Options: 8
2.4 Device Address Binding: 9
2.5 Networking Options: 9
2.6 Character Sets Supported 9
2.7 Gateway 9
3 BACnet Interoperability Building Blocks Supported (BIBBs) 10
3.1 Data Sharing BIBBs 10
3.2 Alarm and Event Management BIBBs 10
3.3 Scheduling BIBBs 11
3.4 Trending BIBBs 11
3.5 Network Management BIBBs 11
3.6 Device Management BIBBs 12
4 Service Types 13
5 Objects 14
5.1 Supported Object Types 14
5.2 Member objects 15
5.2.1 Type: Gateway 15
5.2.2 Type: Indoor Unit 15
5.3 Objects and properties 16
5.3.1 Midea AC Gateway (Device Object Type) 16
5.3.2 OnOff_status (Binary Input Object Type) 18
5.3.3 OnOff_command (Binary Output Object Type) 19
5.3.4 Mode_status (Multistate Input Object Type) 20
5.3.5 Mode_command (Multistate Output Object Type) 21
5.3.6 Setpoint_status (Analog Input Object Type) 22
5.3.7 Setpoint_command (Analog Output Object Type) 23
5.3.8 FanSpeed_status (Multistate Input Object Type) 24
5.3.9 FanSpeed_command (Multistate Output Object Type) 25
5.3.10 AirDirectionUD_status (Multistate Input Object Type) 26
5.3.11 AirDirectionUD_command (Multistate Output Object Type) 27

© HMS Industrial Networks S.L.U. - All rights reserved
This information is subject to change without notice

5.3.12 RoomTemperature_status (Analog Input Object Type) 28
5.3.13 RoomTemperature_command (Analog Output Object Type) 29
5.3.14 ErrorCode (Analog Input Object Type) 30
5.3.15 ErrorCodeM (Multistate Input Object Type) 31
5.3.16 ErrorActive (Binary Input Object Type) 33
5.3.17 OnTimeCounter (Analog Value Object Type) 34
5.3.18 Occupancy (Multistate Value Object Type) 35
5.3.19 OccupiedCoolSetPoint (Analog Value Object Type) 36
5.3.20 OccupiedHeatSetPoint (Analog Value Object Type) 37
5.3.21 UnoccupiedCoolSetPoint (Analog Value Object Type) 38
5.3.22 UnoccupiedHeatSetPoint (Analog Value Object Type) 39
5.3.23 OccupancyContinuousCheck (Binary Value Object Type) 40
5.3.24 UnoccupiedDeadbandAction (Binary Value Object Type) 41
5.3.25 RemoteControllerProhibit_status (Multistate Input Object Type) 42
5.3.26 RemoteControllerProhibit_command (Multistate Output Object Type) 43
5.3.27 DIP_SW_S1_status (Analog Input Object Type) 44
5.3.28 DIP_SW_S2_status (Analog Input Object Type) 45
5.3.29 SerialNumber (Analog Input Object Type) 46
5.3.30 AC IU address (Multistate Value Object Type) 47
5.3.31 Midea_DIP_SW_setting (Multistate Input Object Type) 48
5.4 Considerations on Temperature Objects 49
6 Connections and switches 51
6.1 Connect to the XYE terminals 51
6.2 Connect to BACnet MS/TP 52
6.2.1 MS/TP MAC address switch configuration 52
6.2.2 BACnet MS/TP baudrate 53
6.3 Connect to an external power supply 53
7 Set-up process and troubleshooting 53
7.1 Pre-requisites 53
7.2 Physical checking 53
7.3 LED status 54
7.4 Occupancy 55
8 Restore factory Settings 56
8.1 Restore factory Settings 56
9 AC Unit Types compatibility 57
10 Mechanical & electrical characteristics 58
11 Error codes 59

© HMS Industrial Networks S.L.U. - All rights reserved
This information is subject to change without notice

1 Description

1.1 Introduction

This document describes the integration of Midea air conditioning systems into BACnet MS/TP compatible devices and systems using gateway *INBACMID001I100.*

The aim of this integration is to monitor and control your Midea air conditioning system, remotely, from your Control Center using any commercial SCADA or monitoring software that includes a BACnet driver or connect it to other BACnet devices to do any automation. To do it so, Intesis allows BACnet communication allowing polling or subscription requests (COV).

Intesis makes available the Midea air conditioning system indoor units through independent BACnet objects.

Abstraction of Midea air conditioning system properties and functionalities as fixed BACnet Objects. Intesis allows fixed BACnet object IDs mapping. Simple configuration is needed: just select the appropriate communication parameters (MAC address, baud rate…).

This document assumes that the user is familiar with BACnet and Midea technologies and their technical terms.

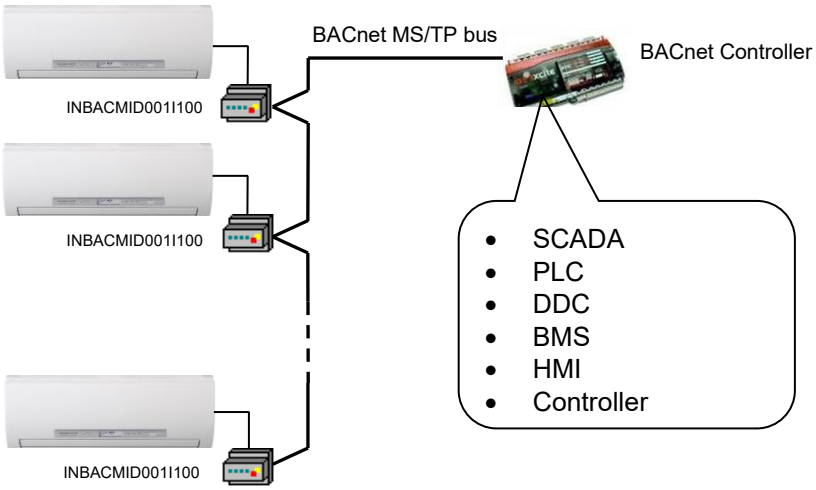

BACnet MS/TP installation sketch

© HMS Industrial Networks S.L.U. - All rights reserved
This information is subject to change without notice

1.2 Functionality

Intesis continuously read the Midea AC unit and keeps the updated status of all objects in its memory, ready to be served when requested from the BACnet side.

The role of Intesis consists in associate the elements of the Midea AC unit with BACnet objects.

The control of the indoor units through the INBACMID001I100 is permitted, so commands toward the Midea AC unit are permitted too.

The indoor unit is offered in a set of BACnet objects and extra functionality.

1.3 Capacity of Intesis

Intesis is capable of integrate one single Midea AC unit and its associated elements.

Element	Max.	Notes
Number of indoor units	1	Number of indoor units that can be controlled through Intesis
Number of Objects	30	Number of Midea AC signals available as objects into Intesis

1.4 Quick Setup

1. Install Intesis in the desired installation site (DIN rail mounting inside a metallic industrial cabinet connected to ground is recommended).
2. Connect the communication cables. Details in section 6 CONNECTIONS AND SWITCHES.
3. Check the BACnet objects list for its integration to your BACnet project. Details in section 5.3 OBJECTS AND PROPERTIES.
4. Check if there is communication between BACnet and AC system through device LED. Details in section 7.3 LED STATUS.
5. The Intesis is ready to be used in your system.

© HMS Industrial Networks S.L.U. - All rights reserved
This information is subject to change without notice

2 Protocol Implementation Conformance Statement

BACnet Protocol Implementation Conformance Statement (PICS)

Date: *2015-04-01*
Vendor Name: *HMS Industrial Networks S.L.U*
Product Name: *INBACMID001I100*
Product Model Number: *INBACMID001I100*
Application Software Version: *1.0*
Firmware Revision: *1.0.0.0*
BACnet Protocol Revision: *12*

Product Description:

Midea Commercial and VRF air conditioning systems – BACnet MS/TP

Abstraction of Midea air conditioning system properties and functionalities as BACnet Objects.

2.1 BACnet Standardized Device Profile (Annex L):

☐ BACnet Operator Workstation (B-OWS)

☐ BACnet Building Controller (B-BC)

☐ BACnet Advanced Application Controller (B-AAC)

☒ BACnet Application Specific Controller (B-ASC)

☐ BACnet Smart Sensor (B-SS)

☐ BACnet Smart Actuator (B-SA)

Additional BACnet Interoperability Building Blocks Supported (Annex K):
Reference of BIBBs List

2.2 Segmentation Capability:

Segmented request supported	☐ No	☒ Yes	Window Size *16*
Segmented responses supported	☐ No	☒ Yes	Window Size *16*

2.3 Data Link Layer Options:

☐ BACnet IP, (Annex J)
☐ BACnet IP, (Annex J), Foreign Device
☐ ISO 8802-3, Ethernet (Clause 7)
☐ ANSI/ATA 878.1, 2.5 Mb. ARCNET (Clause 8)
☐ ANSI/ATA 878.1, RS-485 ARCNET (Clause 8), baud rate(s) ____
☒ MS/TP master (Clause 9), baud rate(s): 9600, 19200, 38400, 76800
☐ MS/TP slave (Clause 9), baud rate(s):
☐ Point-To-Point, EIA 232 (Clause 10), baud rate(s):
☐ Point-To-Point, modem, (Clause 10), baud rate(s):
☐ LonTalk, (Clause 11), medium: _____
☐ Other:

© HMS Industrial Networks S.L.U. - All rights reserved
This information is subject to change without notice

2.4 Device Address Binding:

Is static device binding supported? (This is currently necessary for two-way communication with MS/TP slaves and certain other devices.) ☐ Yes ☒ No

2.5 Networking Options:

☐ Router, Clause 6 - List all routing configurations, e.g., ARCNET-Ethernet, Ethernet-MS/TP, etc.
☐ Annex H, BACnet Tunneling Router over IP
☐ BACnet/IP Broadcast Management Device (BBMD)
Does the BBMD support registrations by Foreign Devices? ☐ Yes ☐ No

2.6 Character Sets Supported

Indicating support for multiple character sets does not imply that they can all be supported simultaneously.

☒ ANSI X3.4
☐ IBM™/Microsoft™ DBCS
☐ JIS C 6226
☐ ISO 10646 (UCS-4)
☐ ISO 10646 (UCS-2)
☐ ISO 8859-1

2.7 Gateway

If this product is a communication gateway, describe the types of non-BACnet equipment/network(s) that the gateway supports:

Midea Air Conditioning Units compatible with Commercial and VRF systems air conditioners.

© HMS Industrial Networks S.L.U. - All rights reserved
This information is subject to change without notice

3 BACnet Interoperability Building Blocks Supported (BIBBs)

3.1 Data Sharing BIBBs

BIBB Type		Active	BACnet Service	Initiate	Execute
DS-RP-A	Data Sharing-ReadProperty–A	☐	ReadProperty	☒	☐
DS-RP-B	Data Sharing-ReadProperty–B	☒	ReadProperty	☐	☒
DS-RPM-A	Data Sharing-ReadPropertyMultiple–A	☐	ReadPropertyMultiple	☒	☐
DS-RPM-B	Data Sharing-ReadPropertyMultiple–B	☒	ReadPropertyMultiple	☐	☒
DS-RPC-A	Data Sharing-ReadPropertyConditiona–A	☐	ReadPropertyConditional	☒	☐
DS-RPC-B	Data Sharing-ReadPropertyConditional–B	☐	ReadPropertyConditional	☐	☒
DS-WP-A	Data Sharing-WriteProperty–A	☐	WriteProperty	☒	☐
DS-WP-B	Data Sharing-WriteProperty–B	☒	WriteProperty	☐	☒
DS-WPM-A	Data Sharing-WritePropertyMultiple–A	☐	WritePropertyMultiple	☒	☐
DS-WPM-B	Data Sharing-WritePropertyMultiple–B	☒	WritePropertyMultiple	☐	☒
DS-COV-A	Data Sharing-COV–A	☐	SubscribeCOV	☒	☐
		☐	ConfirmedCOVNotification	☐	☒
		☐	UnconfirmedCOVNotification	☐	☒
DS-COV-B	Data Sharing-COV–B	☒	SubscribeCOV	☐	☒
		☒	ConfirmedCOVNotification	☒	☐
		☒	UnconfirmedCOVNotification	☒	☐
DS-COVP-A	Data Sharing-COVP–A	☐	SubscribeCOV	☒	☐
		☐	ConfirmedCOVNotification	☐	☒
		☐	UnconfirmedCOVNotification	☐	☒
DS-COVP-B	Data Sharing-COVP–B	☐	SubscribeCOV	☐	☒
		☐	ConfirmedCOVNotification	☒	☐
		☐	UnconfirmedCOVNotification	☒	☐
DS-COVU-A	Data Sharing-COV-Unsolicited–A	☐	UncofirmedCOVNotification	☐	☒
DS-COVU-B	Data Sharing-COV-Unsolicited-B	☐	UncofirmedCOVNotification	☒	☐

3.2 Alarm and Event Management BIBBs

BIBB Type		Active	BACnet Service	Initiate	Execute
AE-N-A	Alarm and Event-Notification–A	☐	ConfirmedEventNotification	☐	☒
		☐	UnconfirmedEventNotification	☐	☒
AE-N-I-B	Alarm and Event-Notification Internal–B	☐	ConfirmedEventNotification	☒	☐
		☐	UnconfirmedEventNotification	☒	☐
AE-N-E-B	Alarm and Event-Notification External–B	☐	ConfirmedEventNotification	☒	☐
		☐	UnconfirmedEventNotification	☒	☐
AE-ACK-A	Alarm and Event-ACK–A	☐	AcknowledgeAlarm	☒	☐
AE-ACK-B	Alarm and Event-ACK–B	☐	AcknowledgeAlarm	☐	☒
AE-ASUM-A	Alarm and Event-Summary–A	☐	GetAlarmSummary	☒	☐
AE-ASUM-B	Alarm and Event-Summary–B	☐	GetAlarmSummary	☐	☒
AE-ESUM-A	Event-Summary–A	☐	GetEnrollmentSummary	☒	☐
AE-ESUM-B	Event-Summary–B	☐	GetEnrollmentSummary	☐	☒
AE-INFO-A	Alarm and Event-Information–A	☐	GetEventInformation	☒	☐
AE-INFO-B	Alarm and Event-Information–B	☐	GetEventInformation	☐	☒
AE-LS-A	Alarm and Event-LifeSafety–A	☐	LifeSafetyOperation	☒	☐
AE-LS-B	Alarm and Event-LifeSafety–B	☐	LifeSafetyOperation	☐	☒

© HMS Industrial Networks S.L.U. - All rights reserved
This information is subject to change without notice

3.3 Scheduling BIBBs

BIBB Type		Active	BACnet Service	Initiate	Execute
SCHED-A	Scheduling–A *(must support DS-RP-A and DS-WP-A)*	☐			
		☐			
SCHED-I-B	Scheduling-Internal–B *(shall support DS-RP-B and DS-WP-B)* *(shall also support ether DM-TS-B or DS-UTC-B)*	☐			
		☐			
SCHED-E-B	Scheduling-External–B *(shall support SCHED-I-B and DS-WP-A)*	☐			
		☐			
T-VMT-A	Trending - Viewing and Modifying Trends–A	☐	ReadRange	☐	☒
T-VMT-I-B	Trending - Viewing and Modifying Trends Inernal–B	☐	ReadRange	☐	☒
T-VMT-E-B	Trending - Viewing and Modifying Trends External–B	☐	ReadRange	☐	☒
T-ATR-A	Trending - Automated Trend Retrieval–A	☐	ConfirmedEventNotification	☐	☒
		☐	ReadRange	☒	☐
T-ATR-B	Trending - Automated Trend Retrieval–B	☐	ConfirmedEventNotification	☒	☐
		☐	ReadRange	☐	☒

3.4 Trending BIBBs

BIBB Type		Active	BACnet Service	Initiate	Execute
T-VMT-A	Trending - Viewing and Modifying Trends–A	☐	ReadRange	☒	☐
T-VMT-I-B	Trending - Viewing and Modifying Trends Inernal–B	☐	ReadRange	☐	☒
T-VMT-E-B	Trending - Viewing and Modifying Trends External–B	☐	ReadRange	☐	☒
T-ATR-A	Trending - Automated Trend Retrieval–A	☐	ConfirmedEventNotification	☐	☒
		☐	ReadRange	☒	☐
T-ATR-B	Trending - Automated Trend Retrieval–B	☐	ConfirmedEventNotification	☒	☐
		☐	ReadRange	☐	☒

3.5 Network Management BIBBs

BIBB Type		Active	BACnet Service	Initiate	Execute
NM-CE-A	Network Management - Connection Establishment–A	☐	Establish-Connection-To-Network	☒	☐
		☐	Disconnect-Connection-To-Network	☒	☐
NM-CE-B	Network Management - Connection Establishment– B	☐	Establish-Connection-To-Network	☐	☒
		☐	Disconnect-Connection-To-Network	☐	☒
NM-RC-A	Network Management - Router Configuration–A	☐	Who-Is-Router-To-Network	☒	☐
		☐	I-Am-Router-To-Network	☐	☒
		☐	I-Could-Be-Router-To-Network	☐	☒
		☐	Initialize-Routing-Table	☒	☐
		☐	Initialize-Routing-Table-Ack	☐	☒
NM-RC-B	Network Management - Router Configuration–B	☐	Who-Is-Router-To-Network	☒	☒
		☐	I-Am-Router-To-Network	☒	☒
		☐	Initialize-Routing-Table	☐	☒
		☐	Initialize-Routing-Table-Ack	☒	☐

© HMS Industrial Networks S.L.U. - All rights reserved
This information is subject to change without notice

3.6 Device Management BIBBs

BIBB Type		Active	BACnet Service	Initiate	Execute
DM-DDB-A	Device Management - Dynamic Device Binding–A	☐	Who-Is	☒	☐
		☐	I-Am	☐	☒
DM-DDB-B	Device Management - Dynamic Device Binding–B	☒	Who-Is	☐	☒
		☒	I-Am	☒	☐
DM-DOB-A	Device Management - Dynamic Object Binding–A	☐	Who-Has	☒	☐
		☐	I-Have	☐	☒
DM-DOB-B	Device Management - Dynamic Object Binding–B	☒	Who-Has	☐	☒
		☒	I-Have	☒	☐
DM-DCC-A	Device Management - DeviceCommunicationControl–A	☐	DeviceCommunicationControl	☒	☐
DM-DCC-B	Device Management - DeviceCommunicationControl–B	☒	DeviceCommunicationControl	☐	☒
DM-PT-A	Device Management - PrivateTransfer–A	☐	ConfirmedPrivateTransfer	☒	☐
		☐	UnconfirmedPrivateTransfer	☒	☐
DM-PT-B	Device Management - PrivateTransfer–B	☐	ConfirmedPrivateTransfer	☐	☒
		☐	UnconfirmedPrivateTransfer	☐	☒
DM-TM-A	Device Management - Text Message–A	☐	ConfirmedTextMessage	☒	☐
		☐	UnconfirmedTextMessage	☒	☐
DM-TM-B	Device Management - Text Message–B	☐	ConfirmedTextMessage	☐	☒
		☐	UnconfirmedTextMessage	☐	☒
DM-TS-A	Device Management - TimeSynchronization–A	☐	TimeSynchronization	☒	☐
DM-TS-B	Device Management - TimeSynchronization–B	☐	TimeSynchronization	☐	☒
DM-UTC-A	Device Management - UTCTimeSynchronization–A	☐	UTCTimeSynchronization	☒	☐
DM-UTC-B	Device Management - UTCTimeSynchronization–B	☐	UTCTimeSynchronization	☐	☒
DM-RD-A	Device Management - ReinitializeDevice–A	☐	ReinitializeDevice	☒	☐
DM-RD-B	Device Management - ReinitializeDevice–B	☒	ReinitializeDevice	☐	☒
DM-BR-A	Device Management - Backup and Restore–A	☐	AtomicReadFile	☒	☐
		☐	AtomicWriteFile	☒	☐
		☐	CreateObject	☒	☐
		☐	ReinitializeDevice	☒	☐
DM-BR-B	Device Management - Backup and Restore–B	☐	AtomicReadFile	☐	☒
		☐	AtomicWriteFile	☐	☒
		☐	ReinitializeDevice	☐	☒
DM-R-A	Device Management - Restart–A	☐	UnconfimedCOVNotification	☐	☒
DM-R-B	Device Management - Restart–B	☐	UnconfimedCOVNotification	☒	☐
DM-LM-A	Device Management - List Manipulation–A	☐	AddListElement	☒	☐
		☐	RemoveListElement	☒	☐
DM-LM-B	Device Management - List Manipulation–B	☐	AddListElement	☐	☒
		☐	RemoveListElement	☐	☒
DM-OCD-A	Device Management - Object Creation and Deletion–A	☐	CreateObject	☒	☐
		☐	DeleteObject	☒	☐
DM-OCD-B	Device Management - Object Creation and Deletion–B	☐	CreateObject	☐	☒
		☐	DeleteObject	☐	☒
DM-VT-A	Device Management - Virtual Terminal–A	☐	VT-Open	☒	☐
		☐	VT-Close	☒	☒
		☐	VT-Data	☒	☒
DM-VT-B	Device Management - Virtual Terminal–B	☐	VT-Open	☐	☒
		☐	VT-Close	☒	☒
		☐	VT-Data	☒	☒

© HMS Industrial Networks S.L.U. - All rights reserved
This information is subject to change without notice

4 Service Types

Service type	Service name	Supported	Remarks
Alarm and Event Services	AcknowledgeAlarm	☐	
	ConfirmedCOVNotification	☐	
	ConfirmedEventNotification	☐	
	GetAlarmSummary	☐	
	GetEnrollmentSummary	☐	
	SubscribeCOV	☒	
File Access Services	AtomicReadFile	☐	
	AtomicWriteFile	☐	
Object Access Services	AddListElement	☐	
	RemoveListElement	☐	
	CreateObject	☐	
	DeleteObject	☐	
	ReadProperty	☒	
	ReadPropertyConditional	☐	
	ReadPropertyMultiple	☒	
	ReadRange	☐	
	WriteProperty	☒	
	WritePropertyMultiple	☒	
Remote Device Management Services	DeviceComminicationControl	☐	
	ConfirmedPrivateTransfer	☐	
	ConfirmedTextMessage	☐	
	ReinitializeDevice	☒	
Virtual Terminal Services	VtOpen	☐	
	VtClose	☐	
	VtData	☐	
Security Services	Authenticate	☐	
	RequestKey	☐	
Unconfirmed Services	I-Am	☒	
	I-Have	☒	
	UnconfirmedCOVNotification	☐	
	UnconfirmedEventNotification	☐	
	UnconfirmedPrivateTransfer	☐	
	UnconfirmedTextMessage	☐	
	TimeSynchronization	☐	
	UtcTimeSynchronization	☐	
	Who-Has	☒	
	Who-Is	☒	
	LifeSafetyOperation	☐	
	SubscribeCOVProperty	☒	
	GetEventInformation	☐	

© HMS Industrial Networks S.L.U. - All rights reserved
This information is subject to change without notice

5 Objects

5.1 Supported Object Types

The objects supported are shown in the table below.

Object Type	ID	Supported	Management Point
Analog-Input	0	☒	SetPoint_status Room Temperature_status ErrorCode DIP_SW_S1_status DIP_SW_S2_status SerialNumber
Analog-Output	1	☒	SetPoint_command RoomTemperature_command
Analog-Value	2	☒	OnTimeCounter OccupiedCoolSetPoint OccupiedHeatSetPoint UnoccupiedCoolSetPoint UnoccupiedHeatSetPoint
Averaging	18	☐	
Binary-Input	3	☒	OnOff_status ErrorActive
Binary-Output	4	☒	OnOff_command
Binary-Value	5	☒	OccupancyContinousCheck UnnoccupiedDeadBandAction
Calendar	6	☐	
Command	7	☐	
Device	8	☒	INBACMID001I100
Event-Enrollment	9	☐	
File	10	☐	
Group	11	☐	
Life-Safety-Point	21	☐	
Life-Safety-Zone	22	☐	
Loop	12	☐	
Multistate-Input	13	☒	Mode_status FanSpeed_status AirDirectionUD_status ErrorCodeM RemoteControllerProhibit_status Midea_setting
Multistate-Output	14	☒	Mode_command FanSpeed_command AirDirectionUD_command RemoteControllerProhibit_command
Multistate-Value	19	☒	Occupancy AC_IU_address
Notification-Class	15	☐	
Program	16	☐	
Schedule	17	☐	
Trend-Log	20	☐	

© HMS Industrial Networks S.L.U. - All rights reserved
This information is subject to change without notice

5.2 Member objects

5.2.1 Type: Gateway

Object-name	Description	Object-type	Object-instance
INBACMID001I100	Midea AC Interface	Device	246000*

* This is the default value.

5.2.2 Type: Indoor Unit

Object-name	Description	Object-type	Object-instance
OnOff_status		BI	0
OnOff_command		BO	0
Mode_status		MI	0
Mode_command		MO	0
SetPoint_status		AI	0
SetPoint_command		AO	0
FanSpeed_status		MI	1
FanSpeed_command		MO	1
AirDirectionUD_status		MI	2
AirDirectionUD_command		MO	2
RoomTemperature_status		AI	1
RoomTemperature_command		AO	1
ErrorCode		AI	2
ErrorCodeM		MI	4
ErrorActive		BI	1
OnTimeCounter		AV	0
Occupancy		MV	0
OccupiedCoolSetPoint		AV	1
OccupiedHeatSetPoint		AV	2
UnoccupiedCoolSetPoint		AV	3
UnoccupiedHeatSetPoint		AV	4
OccupancyContinuousCheck		BV	0
UnoccupiedDeadbandAction		BV	1
RemoteControllerProhibit_status		MI	6
RemoteControllerProhibit_command		MO	5
DIP_SW_S1_status		AI	9
DIP_SW_S2_status		AI	10
SerialNumber		AI	11
AC_IU_address		MV	1
Midea_setting		MI	11

© HMS Industrial Networks S.L.U. - All rights reserved
This information is subject to change without notice

5.3 Objects and properties

5.3.1 Midea AC Gateway (Device Object Type)

Below you can find relevant information about the properties of the object type.

Object_Identifier: identifying the device in the BACnet MSTP network can be done automatically or manually:

- Automatical addressing. This is the device factory mode. Automatic addressing is based on using a base address of 246000 and adding to this number the address selected in SW2 P1...P7.
- Manual addressing. Device will switch into manual addressing mode once a value is received from BACnet side in this property. During manual addressing mode, SW2 P1...P7 address is not considered.

⚠ ***Important***: If **Object_Identifier** is overwritten from BACnet, SW2 configuration will not be considered for device instance calculation until a **Restore factory Settings** reset is performed.

Object_Name: In the **Device Object**, is configurable writing directly on this property.

Description: In the **Device Object**, is configurable writing directly on the property, length maximum 63 chars.

Property Identifier	Property Datatype	Value	ASHRAE	IBOX
Object_Identifier	BACnetObjectIdentifier	(Device, 246000*)	R	W
Object_Name	CharacterString	"INBACMID001I100"	R	W
Object_Type	BACnetObjectType	DEVICE (8) (Device Object Type)	R	R
System_Status	BACnetDeviceStatus	OPERATIONAL (0)	R	R
Vendor_Name	CharacterString	"HMS Industrial Networks S.L.U"	R	R
Vendor_Identifier	Unsigned16	246	R	R
Model_Name	CharacterString	"INBACMID001I100"	R	R
Firmware_Revision	CharacterString	"1.0.0.0"	R	R
Application_Software_ Version	CharacterString	"1.0.0.0"	R	R
Location	CharacterString	""	O	-
Description	CharacterString	"Midea AC interface"	O	W
Protocol_Version	Unsigned	1	R	R
Protocol_Revision	Unsigned	12	R	R
Protocol_Services_ Supported	BACnetServiceSupported	Refer to section 4 [Service Types]	R	R
Protocol_Object_Types_ Supported	BACnetObjectTypes Supported	Refer to section 5.1 [Object Types]	R	R
Object_List	BACnetArray[N] of BACnetObjectIdentifier	BACnetARRAY[N]	R	R
Structured_Object_List	BACnetArray[N] of BACnetObjectIdentifier	-	O	-
Max_APDU_Length_ Accepted	Unsigned	480	R	R
Segmentation_Supported	BACnetSegmentation	SEGMENTED-BOTH (0)	R	R
Max_Segments_accepted	Unsigned	16	O	R
VT_Classes_Supported	List of BACnetVTClass	-	O	-
Active_VT_Sessions	List of BACnetVTSession	-	O	-
Local_Date	Date	-	O	-

© HMS Industrial Networks S.L.U. - All rights reserved
This information is subject to change without notice

Property Identifier	Property Datatype	Value	ASHRAE	IBOX
Local_Time	Time	-	O	-
UTC_Offset	INTEGER	-	O	-
Daylight_Savings_Status	BOOLEAN	-	O	-
APDU_Segment_Timeout	Unsigned	3000	R	R
APDU_Timeout	Unsigned	3000	R	R
Number_of_APDU_ Retries	Unsigned	3	R	R
List_Of_Session_Keys	List of BACnetSessionKey	-	O	-
Time_Synchronization_ Recipients	List of BACnetRecipient	-	O	-
Max_Master	Unsigned	32	R	W
Max_Info_Frames	Unsigned	1	O	R
Device_Address_Binding	List of BACnetAddressBinding	NULL (empty)	R	R
Database_Revision	Unsigned	0	R	R
Configuration_Files	BACnetArray[N] of BACnetObjectIdentifier	-	O	-
Last_Restore_Time	BACnetTimeStamp	-	O	-
Backup_Failure_Timeout	Unsigned16	-	O	-
Active_COV_ Subscriptions	List of BACnetCOVSubscription	List of BACnetCOVSubscription	O	R
Slave_Proxy_Enable	BACnetArray[N] of BOOLEAN	-	O	-
Manual_Slave_Address_ Binding	List of BACnetAddressBinding	-	O	-
Auto_Slave_Discovery	BACnetArray[N] of BOOLEAN	-	O	-
Slave_Address_Binding	BACnetAddressBinding	-	O	-
Last_Restart_Reason	BACnetRestartReason	-	O	-
Time_Of_Device_Restart	BACnetTimeStamp	-	O	-
Restart_Notification_ Recipients	List of BACnetRecipient	-	O	-
UTC_Time_ Synchronization_ Recipients	List of BACnetRecipient	-	O	-
Time_Synchronization_ Interval	Unsigned	-	O	-
Align_Intervals	BOOLEAN	-	O	-
Interval_Offset	Unsigned	-	O	-
Profile_Name	CharacterString	-	O	-

* This is the default value.

© HMS Industrial Networks S.L.U. - All rights reserved
This information is subject to change without notice

5.3.2 OnOff_status (Binary Input Object Type)

It indicates if the indoor unit is in On or Off status.

Property Identifier	Property Datatype	Value	ASHRAE	IBOX
Object_Identifier	BACnetObjectIdentifier	(Binary Input, 0)	R	R
Object_Name	CharacterString	“OnOff_status”	R	R
Object_Type	BACnetObjectType	BINARY_INPUT (3)	R	R
Present_Value	BACnetBinaryPV	INACTIVE (0) / ACTIVE (1)	R	R
Description	CharacterString	-	O	-
Device_Type	CharacterString	-	O	-
Status_Flags	BACnetStatusFlags	{FALSE, FALSE/TRUE, FALSE, FALSE}	R	R
Event_State	BACnetEventState	STATE_NORMAL (0)	R	R
Reliability	BACnetReliability	NO_FAULT_DETECTED (0), UNRELIABLE_OTHER (7)	O	R
Out_Of_Service	BOOLEAN	FALSE	R	R
Polarity	BACnetPolarity	NORMAL (0)	R	R
Inactive_Text	CharacterString	"Off"	O	R
Active_Text	CharacterString	“On”	O	R
Change_Of_State_Time	BACnetDatetime	-	O	-
Change_Of_State_Count	Unsigned	-	O	-
Time_Of_State_Count_Reset	BACnetDatetime	-	O	-
Elapsed_Active_Time	Unsigned	-	O	-
Time_Of_Active_Time_Reset	BACnetDatetime	-	O	-
Time_Delay	Unsigned	-	O	-
Notification_Class	Unsigned	-	O	-
Alarm_Value	BACnetBinaryPV	-	O	-
Event_Enable	BACnetEventTransitionBits	-	O	-
Acked_Transitions	BACnetEventTransitionBits	-	O	-
Notify_Type	BACnetNotifyType	-	O	-
Event_Time_Stamps	BACnetArray[N] of BACnetTimeStamp	-	O	-
Profile_Name	CharacterString	-	O	-

© HMS Industrial Networks S.L.U. - All rights reserved
This information is subject to change without notice

5.3.3 OnOff_command (Binary Output Object Type)

It sets the indoor unit to On or Off.

Property Identifier	Property Datatype	Value	ASHRAE	IBOX
Object_Identifier	BACnetObjectIdentifier	(Binary Output, 0)	R	R
Object_Name	CharacterString	“OnOff_command”	R	R
Object_Type	BACnetObjectType	BINARY_OUTPUT (4)	R	R
Present_Value	BACnetBinaryPV	INACTIVE (0) / ACTIVE (1)	W	W
Description	CharacterString	-	O	-
Device_Type	CharacterString	-	O	-
Status_Flags	BACnetStatusFlags	{FALSE, FALSE, FALSE, FALSE}	R	R
Event_State	BACnetEventState	STATE_NORMAL (0)	R	R
Reliability	BACnetReliability	NO_FAULT_DETECTED (0)	O	R
Out_Of_Service	BOOLEAN	FALSE	R	R
Polarity	BACnetPolarity	NORMAL (0)	R	R
Inactive_Text	CharacterString	"Off"	O	R
Active_Text	CharacterString	“On"	O	R
Change_Of_State_Time	BACnetDatetime	-	O	-
Change_Of_State_Count	Unsigned	-	O	-
Time_Of_State_Count_Reset	BACnetDatetime	-	O	-
Elapsed_Active_Time	Unsigned	-	O	-
Time_Of_Active_Time_Reset	BACnetDatetime	-	O	-
Minimum_Off_Time	Unsigned32	-	O	-
Minimum_On_Time	Unsigned32	-	O	-
Priority_Array	BACnetPriorityArray	BACnetPriorityArray	R	R
Relinquish_Default	BACnetBinaryPV	INACTIVE (0)	R	R
Time_Delay	Unsigned	-	O	-
Notification_Class	Unsigned	-	O	-
Feedback_Value	BACnetBinaryPV	-	O	-
Event_Enable	BACnetEventTransitionBits	-	O	-
Acked_Transitions	BACnetEventTransitionBits	-	O	-
Notify_Type	BACnetNotifyType	-	O	-
Event_Time_Stamps	BACnetArray[N] of BACnetTimeStamp	-	O	-
Profile_Name	CharacterString	-	O	-

© HMS Industrial Networks S.L.U. - All rights reserved
This information is subject to change without notice

5.3.4 Mode_status (Multistate Input Object Type)

It indicates the active mode for the indoor unit.

Property Identifier	Property Datatype	Value	ASHRAE	IBOX
Object_Identifier	BACnetObjectIdentifier	(Multi-state Input, 0)	R	R
Object_Name	CharacterString	"Mode_status"	R	R
Object_Type	BACnetObjectType	MULTISTATE_INPUT (13)	R	R
Present_Value	Unsigned	1 ~ 5	R	R
Description	CharacterString	-	O	-
Device_Type	CharacterString	-	O	-
Status_Flags	BACnetStatusFlags	{FALSE, FALSE/TRUE, FALSE, FALSE}	R	R
Event_State	BACnetEventState	STATE_NORMAL (0)	R	R
Reliability	BACnetReliability	NO_FAULT_DETECTED (0), UNRELIABLE_OTHER (7)	O	R
Out_Of_Service	BOOLEAN	FALSE	R	R
Number_Of_States	Unsigned	5	R	R
State_Text	BACnetArray[N] of CharacterString	*Check **Mode Status setting table** below.*	O	R
Time_Delay	Unsigned	-	O	-
Notification_Class	Unsigned	-	O	-
Alarm_Values	List of Unsigned	-	O	-
Fault_Values	List of Unsigned	-	O	-
Event_Enable	BACnetEventTransitionBits	-	O	-
Acked_Transitions	BACnetEventTransitionBits	-	O	-
Notify_Type	BACnetNotifyType	-	O	-
Event_Time_Stamps	BACnetArray[N] of BACnetTimeStamp	-	O	-
Profile_Name	CharacterString	-	O	-

Mode status setting table

Mode status interpretation is possible using the value in the following correspondence table.

Present_Value	Contents displayed in State_Text
1	Heat
2	Cool
3	Fan
4	Dry
5	Auto

© HMS Industrial Networks S.L.U. - All rights reserved
This information is subject to change without notice

5.3.5 Mode_command (Multistate Output Object Type)

It allows control over the indoor unit's mode.

Property Identifier	Property Datatype	Value	ASHRAE	IBOX
Object_Identifier	BACnetObjectIdentifier	(Multi-state Output, 0)	R	R
Object_Name	CharacterString	"Mode_command"	R	R
Object_Type	BACnetObjectType	MULTISTATE_OUTPUT (14)	R	R
Present_Value	Unsigned	1 ~ 5	W	W
Description	CharacterString	-	O	-
Device_Type	CharacterString	-	O	-
Status_Flags	BACnetStatusFlags	{FALSE, FALSE, FALSE, FALSE}	R	R
Event_State	BACnetEventState	STATE_NORMAL (0)	R	R
Reliability	BACnetReliability	NO_FAULT_DETECTED (0)	O	R
Out_Of_Service	BOOLEAN	FALSE	R	R
Number_Of_States	Unsigned	5	R	R
State_Text	BACnetArray[N] of CharacterString	*Check **Mode Command setting table** below*	O	R
Priority_Array	BACnetPriorityArray	BACnetPriorityArray	R	R
Relinquish_Default	Unsigned	1	R	R
Time_Delay	Unsigned	-	O	-
Notification_Class	Unsigned	-	O	-
Feedback_Value	Unsigned	-	O	-
Event_Enable	BACnetEventTransitionBits	-	O	-
Acked_Transitions	BACnetEventTransitionBits	-	O	-
Notify_Type	BACnetNotifyType	-	O	-
Event_Time_Stamps	BACnetArray[N] of BACnetTimeStamp	-	O	-
Profile_Name	CharacterString	-	O	-

Mode Command setting table

Mode commands can be set using the values in the following correspondence table.

Present_Value	Contents displayed in State_Text
1	Heat
2	Cool
3	Fan
4	Dry
5	Auto

© HMS Industrial Networks S.L.U. - All rights reserved
This information is subject to change without notice

5.3.6 Setpoint_status (Analog Input Object Type)

It indicates the current setpoint temperature in the indoor unit.

Property Identifier	Property Datatype	Value	ASHRAE	IBOX
Object_Identifier	BACnetObjectIdentifier	(Analog Input, 0)	R	R
Object_Name	CharacterString	“SetPoint_status”	R	R
Object_Type	BACnetObjectType	ANALOG_INPUT (0)	R	R
Present_Value*	REAL	16…32°C // 61…90°F	R	R
Description	CharacterString	-	O	-
Device_Type	CharacterString	-	O	-
Status_Flags	BACnetStatusFlags	{FALSE, FALSE/TRUE, FALSE, FALSE}	R	R
Event_State	BACnetEventState	STATE_NORMAL (0)	R	R
Reliability	BACnetReliability	NO_FAULT_DETECTED (0), UNRELIABLE_OTHER (7)	O	R
Out_Of_Service	BOOLEAN	FALSE	R	R
Update_Interval	Unsigned	-	O	-
Units *	BACnetEngineeringUnits	Degrees Celsius (62), Degrees Fahrenheit (64)	R	R
Min_Pres_Value *	REAL	16°C / 61°F	O	R
Max_Pres_Value *	REAL	32°C / 90°F	O	R
Resolution	REAL	-	O	-
COV_Increment	REAL	0	O	W
Time_Delay	Unsigned	-	O	-
Notification_Class	Unsigned	-	O	-
High_Limit	REAL	-	O	-
Low_Limit	REAL	-	O	-
Deadband	REAL	-	O	-
Limit_Enable	BACnetLimitEnable	-	O	-
Event_Enable	BACnetEventTransitionBits	-	O	-
Acked_Transitions	BACnetEventTransitionBits	-	O	-
Notify_Type	BACnetNotifyType	-	O	-
Event_Time_Stamps	BACnetArray[N] of BACnetTimeStamp	-	O	-
Profile_Name	CharacterString	-	O	-

* Use of Celsius or Fahrenheit units can be selected throught the switch configuration. Check section 6.1 for more information.

© HMS Industrial Networks S.L.U. - All rights reserved
This information is subject to change without notice

5.3.7 Setpoint_command (Analog Output Object Type)

It sets the desired temperature in the indoor unit.

Property Identifier	Property Datatype	Value	ASHRAE	IBOX
Object_Identifier	BACnetObjectIdentifier	(Analog Output, 0)	R	R
Object_Name	CharacterString	“SetPoint_command”	R	R
Object_Type	BACnetObjectType	ANALOG_OUTPUT (1)	R	R
Present_Value *	REAL	16…32°C // 61…90°F	R	R
Description	CharacterString	-	O	-
Device_Type	CharacterString	-	O	-
Status_Flags	BACnetStatusFlags	{FALSE, FALSE, FALSE, FALSE}	R	R
Event_State	BACnetEventState	STATE_NORMAL (0)	R	R
Reliability	BACnetReliability	NO_FAULT_DETECTED (0)	O	R
Out_Of_Service	BOOLEAN	FALSE	R	R
Update_Interval	Unsigned	-	O	-
Units *	BACnetEngineeringUnits	Degrees Celsius (62), Degrees Fahrenheit (64)	R	R
Min_Pres_Value	REAL	16°C / 61°F	O	R
Max_Pres_Value	REAL	32°C / 90°F	O	R
Resolution	REAL	-	O	-
COV_Increment	REAL	0	O	W
Priority_Array	BACnetPriorityArray	BACnetPriorityArray	R	R
Relinquish_Default	Unsigned	22	R	R
Time_Delay	Unsigned	-	O	-
Notification_Class	Unsigned	-	O	-
High_Limit	REAL	-	O	-
Low_Limit	REAL	-	O	-
Deadband	REAL	-	O	-
Limit_Enable	BACnetLimitEnable	-	O	-
Event_Enable	BACnetEventTransitionBits	-	O	-
Acked_Transitions	BACnetEventTransitionBits	-	O	-
Notify_Type	BACnetNotifyType	-	O	-
Event_Time_Stamps	BACnetArray[N] of BACnetTimeStamp	-	O	-
Profile_Name	CharacterString	-	O	-

* Use of Celsius or Fahrenheits units can be selected throught the switch configuration. Check section 6.1 for more information.

© HMS Industrial Networks S.L.U. - All rights reserved
This information is subject to change without notice

5.3.8 FanSpeed_status (Multistate Input Object Type)

It indicates the fan speed status of the indoor unit.

Property Identifier	Property Datatype	Value	ASHRAE	IBOX
Object_Identifier	BACnetObjectIdentifier	(Multi-state Input, 1)	R	R
Object_Name	CharacterString	“FanSpeed_status”	R	R
Object_Type	BACnetObjectType	MULTISTATE_INPUT (13)	R	R
Present_Value	Unsigned	1 ~ 4	R	R
Description	CharacterString	-	O	-
Device_Type	CharacterString	-	O	-
Status_Flags	BACnetStatusFlags	{FALSE, FALSE/TRUE, FALSE, FALSE}	R	R
Event_State	BACnetEventState	STATE_NORMAL (0)	R	R
Reliability	BACnetReliability	NO_FAULT_DETECTED (0), UNRELIABLE_OTHER (7)	O	R
Out_Of_Service	BOOLEAN	FALSE/TRUE	R	R
Number_Of_States	Unsigned	4	R	R
State_Text	BACnetArray[N] of CharacterString	*Check **Fan Speed status setting table** below.*	O	R
Time_Delay	Unsigned	-	O	-
Notification_Class	Unsigned	-	O	-
Alarm_Values	List of Unsigned	-	O	-
Fault_Values	List of Unsigned	-	O	-
Event_Enable	BACnetEventTransitionBits	-	O	-
Acked_Transitions	BACnetEventTransitionBits	-	O	-
Notify_Type	BACnetNotifyType	-	O	-
Event_Time_Stamps	BACnetArray[N] of BACnetTimeStamp	-	O	-
Profile_Name	CharacterString	-	O	-

Fan Speed status setting table

Fan speed interpretation is possible using the value in the following correspondence table.

Present_Value	Contents displayed in State_Text
1	Auto
2	Fan Speed 1
3	Fan Speed 2
4	Fan Speed 3

© HMS Industrial Networks S.L.U. - All rights reserved
This information is subject to change without notice

5.3.9 FanSpeed_command (Multistate Output Object Type)

It allows control over the fan speed for the indoor unit.

Property Identifier	Property Datatype	Value	ASHRAE	IBOX
Object_Identifier	BACnetObjectIdentifier	(Multi-state Output, 1)	R	R
Object_Name	CharacterString	“FanSpeed_command”	R	R
Object_Type	BACnetObjectType	MULTISTATE_OUTPUT (14)	R	R
Present_Value	Unsigned	1 ~ 4	W	W
Description	CharacterString	-	O	-
Device_Type	CharacterString	-	O	-
Status_Flags	BACnetStatusFlags	{FALSE, FALSE, FALSE, FALSE}	R	R
Event_State	BACnetEventState	STATE_NORMAL (0)	R	R
Reliability	BACnetReliability	NO_FAULT_DETECTED (0)	O	R
Out_Of_Service	BOOLEAN	FALSE	R	R
Number_Of_States	Unsigned	4	R	R
State_Text	BACnetArray[N] of CharacterString	*Check **Fan Speed command setting table** below*	O	R
Priority_Array	BACnetPriorityArray	BACnetPriorityArray	R	R
Relinquish_Default	Unsigned	1	R	R
Time_Delay	Unsigned	-	O	-
Notification_Class	Unsigned	-	O	-
Feedback_Value	Unsigned	-	O	-
Event_Enable	BACnetEventTransitionBits	-	O	-
Acked_Transitions	BACnetEventTransitionBits	-	O	-
Notify_Type	BACnetNotifyType	-	O	-
Event_Time_Stamps	BACnetArray[N] of BACnetTimeStamp	-	O	-
Profile_Name	CharacterString	-	O	-

Fan Speed command setting table

Fan speed interpretation is possible using the value in the following correspondence table.

Present_Value	Contents displayed in State_Text
1	Auto
2	Fan Speed 1
3	Fan Speed 2
4	Fan Speed 3

© HMS Industrial Networks S.L.U. - All rights reserved
This information is subject to change without notice

5.3.10 AirDirectionUD_status (Multistate Input Object Type)

It indicates the status of the vertical vane (Up/Down) for the indoor unit.

Property Identifier	Property Datatype	Value	ASHRAE	IBOX
Object_Identifier	BACnetObjectIdentifier	(Multi-state Input, 2)	R	R
Object_Name	CharacterString	“AirDirectionUD_status”	R	R
Object_Type	BACnetObjectType	MULTISTATE_INPUT (13)	R	R
Present_Value	Unsigned	1 ~ 2	R	R
Description	CharacterString	-	O	-
Device_Type	CharacterString	-	O	-
Status_Flags	BACnetStatusFlags	{FALSE, FALSE/TRUE, FALSE, FALSE}	R	R
Event_State	BACnetEventState	STATE_NORMAL (0)	R	R
Reliability	BACnetReliability	NO_FAULT_DETECTED (0), UNRELIABLE_OTHER (7)	O	R
Out_Of_Service	BOOLEAN	FALSE/TRUE	R	R
Number_Of_States	Unsigned	2	R	R
State_Text	BACnetArray[N] of CharacterString	*Check **Air Direction Status setting table** below.*	O	R
Time_Delay	Unsigned	-	O	-
Notification_Class	Unsigned	-	O	-
Alarm_Values	List of Unsigned	-	O	-
Fault_Values	List of Unsigned	-	O	-
Event_Enable	BACnetEventTransitionBits	-	O	-
Acked_Transitions	BACnetEventTransitionBits	-	O	-
Notify_Type	BACnetNotifyType	-	O	-
Event_Time_Stamps	BACnetArray[N] of BACnetTimeStamp	-	O	-
Profile_Name	CharacterString	-	O	-

Air direction Up/Down status setting table

Air direction interpretation is possible using the value in the following correspondence table.

Present_Value	Contents displayed in State_Text
1	Stop
2	Swing

© HMS Industrial Networks S.L.U. - All rights reserved
This information is subject to change without notice

5.3.11 AirDirectionUD_command (Multistate Output Object Type)

It allows control over the vertical air direction (Up/Down) for the indoor unit.

Property Identifier	Property Datatype	Value	ASHRAE	IBOX
Object_Identifier	BACnetObjectIdentifier	(Multi-state Output, 2)	R	R
Object_Name	CharacterString	“AirDirectionUD_command”	R	R
Object_Type	BACnetObjectType	MULTISTATE_OUTPUT (14)	R	R
Present_Value	Unsigned	1 ~ 2	W	W
Description	CharacterString	-	O	-
Device_Type	CharacterString	-	O	-
Status_Flags	BACnetStatusFlags	{FALSE, FALSE, FALSE, FALSE}	R	R
Event_State	BACnetEventState	STATE_NORMAL (0)	R	R
Reliability	BACnetReliability	NO_FAULT_DETECTED (0)	O	R
Out_Of_Service	BOOLEAN	FALSE	R	R
Number_Of_States	Unsigned	2	R	R
State_Text	BACnetArray[N] of CharacterString	*Check **Air Direction Command setting table** below*	O	R
Priority_Array	BACnetPriorityArray	-	R	R
Relinquish_Default	Unsigned	-	R	R
Time_Delay	Unsigned	-	O	-
Notification_Class	Unsigned	-	O	-
Feedback_Value	Unsigned	-	O	-
Event_Enable	BACnetEventTransitionBits	-	O	-
Acked_Transitions	BACnetEventTransitionBits	-	O	-
Notify_Type	BACnetNotifyType	-	O	-
Event_Time_Stamps	BACnetArray[N] of BACnetTimeStamp	-	O	-
Profile_Name	CharacterString	-	O	-

Air direction Up/Down Command setting table

Air direction commands can be set using the values in the following correspondence table.

Present_Value	Contents displayed in State_Text
1	Stop
2	Swing

© HMS Industrial Networks S.L.U. - All rights reserved
This information is subject to change without notice

5.3.12 RoomTemperature_status (Analog Input Object Type)

It indicates the room temperature from the sensor in the indoor unit.

Property Identifier	Property Datatype	Value	ASHRAE	IBOX
Object_Identifier	BACnetObjectIdentifier	(Analog Input, 1)	R	R
Object_Name	CharacterString	“RoomTemperature_status”	R	R
Object_Type	BACnetObjectType	ANALOG_INPUT (0)	R	R
Present_Value	REAL	-20…100°C // -4…212°F	R	R
Description	CharacterString	-	O	-
Device_Type	CharacterString	-	O	-
Status_Flags	BACnetStatusFlags	{FALSE, FALSE/TRUE, FALSE, FALSE}	R	R
Event_State	BACnetEventState	STATE_NORMAL (0)	R	R
Reliability	BACnetReliability	NO_FAULT_DETECTED (0), UNRELIABLE_OTHER (7)	O	R
Out_Of_Service	BOOLEAN	FALSE/TRUE	R	R
Update_Interval	Unsigned	-	O	-
Units	BACnetEngineeringUnits	Degrees Celsius (62) Degrees Fahrenheit (64)	R	R
Min_Pres_Value	REAL	-20°C / -4°F	O	-
Max_Pres_Value	REAL	100°C / 212°F	O	-
Resolution	REAL	-	O	-
COV_Increment	REAL	0	O	W
Time_Delay	Unsigned	-	O	-
Notification_Class	Unsigned	-	O	-
High_Limit	REAL	-	O	-
Low_Limit	REAL	-	O	-
Deadband	REAL	-	O	-
Limit_Enable	BACnetLimitEnable	-	O	-
Event_Enable	BACnetEventTransitionBits	-	O	-
Acked_Transitions	BACnetEventTransitionBits	-	O	-
Notify_Type	BACnetNotifyType	-	O	-
Event_Time_Stamps	BACnetArray[N] of BACnetTimeStamp	-	O	-
Profile_Name	CharacterString	-	O	-

© HMS Industrial Networks S.L.U. - All rights reserved
This information is subject to change without notice

5.3.13 RoomTemperature_command (Analog Output Object Type)

It sets the desired temperature in the indoor unit.

Property Identifier	Property Datatype	Value	ASHRAE	IBOX
Object_Identifier	BACnetObjectIdentifier	(Analog Output, 1)	R	R
Object_Name	CharacterString	“RoomTemperature_command”	R	R
Object_Type	BACnetObjectType	ANALOG_OUTPUT (1)	R	R
Present_Value *	REAL	-20…100°C // -4…212°F	R	R
Description	CharacterString	-	O	-
Device_Type	CharacterString	-	O	-
Status_Flags	BACnetStatusFlags	{FALSE, FALSE, FALSE, FALSE}	R	R
Event_State	BACnetEventState	STATE_NORMAL (0)	R	R
Reliability	BACnetReliability	NO_FAULT_DETECTED (0)	O	R
Out_Of_Service	BOOLEAN	FALSE	R	R
Update_Interval	Unsigned	-	O	-
Units *	BACnetEngineeringUnits	Degrees Celsius (62), Degrees Fahrenheit (64)	R	R
Min_Pres_Value	REAL	-20°C / -4°F	O	R
Max_Pres_Value	REAL	100°C / 212°F	O	R
Resolution	REAL	-	O	-
COV_Increment	REAL	0	O	W
Priority_Array	BACnetPriorityArray	BACnetPriorityArray	R	R
Relinquish_Default	Unsigned	22	R	R
Time_Delay	Unsigned	-	O	-
Notification_Class	Unsigned	-	O	-
High_Limit	REAL	-	O	-
Low_Limit	REAL	-	O	-
Deadband	REAL	-	O	-
Limit_Enable	BACnetLimitEnable	-	O	-
Event_Enable	BACnetEventTransitionBits	-	O	-
Acked_Transitions	BACnetEventTransitionBits	-	O	-
Notify_Type	BACnetNotifyType	-	O	-
Event_Time_Stamps	BACnetArray[N] of BACnetTimeStamp	-	O	-
Profile_Name	CharacterString	-	O	-

* Use of Celsius or Fahrenheits units can be selected throught the switch configuration. Check section 6.1 for more information.

© HMS Industrial Networks S.L.U. - All rights reserved
This information is subject to change without notice

5.3.14 ErrorCode (Analog Input Object Type)

It indicates the current error present in the AC system.

Property Identifier	Property Datatype	Value	ASHRAE	IBOX
Object_Identifier	BACnetObjectIdentifier	(Analog Input, 2)	R	R
Object_Name	CharacterString	“ErrorCode”	R	R
Object_Type	BACnetObjectType	ANALOG_INPUT (0)	R	R
Present_Value	REAL	-1… 6846	R	R
Description	CharacterString	-	O	-
Device_Type	CharacterString	-	O	-
Status_Flags	BACnetStatusFlags	{FALSE, FALSE, FALSE, FALSE}	R	R
Event_State	BACnetEventState	STATE_NORMAL (0)	R	R
Reliability	BACnetReliability	NO_FAULT_DETECTED (0)	O	R
Out_Of_Service	BOOLEAN	FALSE	R	R
Update_Interval	Unsigned	300	O	-
Units	BACnetEngineeringUnits	NO_UNITS (95)	R	R
Min_Pres_Value	REAL	-	O	-
Max_Pres_Value	REAL	-	O	-
Resolution	REAL	-	O	-
COV_Increment	REAL	0	O	W
Time_Delay	Unsigned	-	O	-
Notification_Class	Unsigned	-	O	-
High_Limit	REAL	-	O	-
Low_Limit	REAL	-	O	-
Deadband	REAL	-	O	-
Limit_Enable	BACnetLimitEnable	-	O	-
Event_Enable	BACnetEventTransitionBits	-	O	-
Acked_Transitions	BACnetEventTransitionBits	-	O	-
Notify_Type	BACnetNotifyType	-	O	-
Event_Time_Stamps	BACnetArray[N] of BACnetTimeStamp	-	O	-
Profile_Name	CharacterString	-	O	-

© HMS Industrial Networks S.L.U. - All rights reserved
This information is subject to change without notice

5.3.15 ErrorCodeM (Multistate Input Object Type)

It indicates the current error present in the AC system.

Property Identifier	Property Datatype	Value	ASHRAE	IBOX
Object_Identifier	BACnetObjectIdentifier	(Multi-state Input, 4)	R	R
Object_Name	CharacterString	“ErrorCodeM”	R	R
Object_Type	BACnetObjectType	MULTISTATE_INPUT(13)	R	R
Present_Value	Unsigned	1 ~ 34	R	R
Description	CharacterString	-	O	-
Device_Type	CharacterString	-	O	-
Status_Flags	BACnetStatusFlags	{FALSE, FALSE, FALSE, FALSE}	R	R
Event_State	BACnetEventState	STATE_NORMAL (0)	R	R
Reliability	BACnetReliability	NO_FAULT_DETECTED (0)	O	R
Out_Of_Service	BOOLEAN	FALSE	R	R
Number_Of_States	Unsigned	34	R	R
State_Text	BACnetArray[N] of CharacterString	*Check **Error Code table** below.*	O	R
Time_Delay	Unsigned	-	O	-
Notification_Class	Unsigned	-	O	-
Alarm_Values	List of Unsigned	-	O	-
Fault_Values	List of Unsigned	-	O	-
Event_Enable	BACnetEventTransitionBits	-	O	-
Acked_Transitions	BACnetEventTransitionBits	-	O	-
Notify_Type	BACnetNotifyType	-	O	-
Event_Time_Stamps	BACnetArray[N] of BACnetTimeStamp	-	O	-
Profile_Name	CharacterString	-	O	-

© HMS Industrial Networks S.L.U. - All rights reserved
This information is subject to change without notice

Error Code table

In the table below you will find the error correspondence value.

Present_Value	State_Text	Present_Value	State_Text
1	-	19	P1
2	CommError	20	P2
3	E0	21	P3
4	E1	22	P4
5	E2	23	P5
6	E3	24	P6
7	E4	25	P7
8	E5	26	P8
9	E6	27	P9
10	E7	28	PA
11	E8	29	PB
12	E9	30	PC
13	EA	31	PD
14	EB	32	PE
15	EC	33	PF
16	ED		
17	EE		
18	EF		

© HMS Industrial Networks S.L.U. - All rights reserved
This information is subject to change without notice

5.3.16 ErrorActive (Binary Input Object Type)

It indicates if there is an error active in the indoor unit.

Property Identifier	Property Datatype	Value	ASHRAE	IBOX
Object_Identifier	BACnetObjectIdentifier	(Binary Input, 1)	R	R
Object_Name	CharacterString	“ErrorActive”	R	R
Object_Type	BACnetObjectType	BINARY_INPUT (3)	R	R
Present_Value	BACnetBinaryPV	INACTIVE (0) / ACTIVE (1)	R	R
Description	CharacterString	-	O	-
Device_Type	CharacterString	-	O	-
Status_Flags	BACnetStatusFlags	{FALSE, FALSE, FALSE, FALSE}	R	R
Event_State	BACnetEventState	STATE_NORMAL (0)	R	R
Reliability	BACnetReliability	NO_FAULT_DETECTED (0)	O	R
Out_Of_Service	BOOLEAN	FALSE	R	R
Polarity	BACnetPolarity	NORMAL (0)	R	R
Inactive_Text	CharacterString	"No"	O	R
Active_Text	CharacterString	“Error”	O	R
Change_Of_State_Time	BACnetDatetime	-	O	-
Change_Of_State_Count	Unsigned	-	O	-
Time_Of_State_Count_Reset	BACnetDatetime	-	O	-
Elapsed_Active_Time	Unsigned	-	O	-
Time_Of_Active_Time_Reset	BACnetDatetime	-	O	-
Time_Delay	Unsigned	-	O	-
Notification_Class	Unsigned	-	O	-
Alarm_Value	BACnetBinaryPV	-	O	-
Event_Enable	BACnetEventTransitionBits	-	O	-
Acked_Transitions	BACnetEventTransitionBits	-	O	-
Notify_Type	BACnetNotifyType	-	O	-
Event_Time_Stamps	BACnetArray[N] of BACnetTimeStamp	-	O	-
Profile_Name	CharacterString	-	O	-

© HMS Industrial Networks S.L.U. - All rights reserved
This information is subject to change without notice

5.3.17 OnTimeCounter (Analog Value Object Type)

It indicates the AC unit running time.

Property Identifier	Property Datatype	Value	ASHRAE	IBOX
Object_Identifier	BACnetObjectIdentifier	(Analog Value, 0)	R	R
Object_Name	CharacterString	“OnTimeCounter”	R	R
Object_Type	BACnetObjectType	ANALOG_VALUE (2)	R	R
Present_Value	REAL	0 .. 65535	R	R
Description	CharacterString	-	O	-
Status_Flags	BACnetStatusFlags	{FALSE, FALSE, FALSE, FALSE}	R	R
Event_State	BACnetEventState	STATE_NORMAL (0)	R	R
Reliability	BACnetReliability	NO_FAULT_DETECTED (0)	O	R
Out_Of_Service	BOOLEAN	FALSE	R	R
Update_Interval	Unsigned	-	O	-
Units	BACnetEngineeringUnits	Hours (71)	R	R
Min_Pres_Value	REAL	-	O	-
Max_Pres_Value	REAL	-	O	-
Resolution	REAL	-	O	-
COV_Increment	REAL	0	O	W
Time_Delay	Unsigned	-	O	-
Notification_Class	Unsigned	-	O	-
High_Limit	REAL	-	O	-
Low_Limit	REAL	-	O	-
Deadband	REAL	-	O	-
Limit_Enable	BACnetLimitEnable	-	O	-
Event_Enable	BACnetEventTransitionBits	-	O	-
Acked_Transitions	BACnetEventTransitionBits	-	O	-
Notify_Type	BACnetNotifyType	-	O	-
Event_Time_Stamps	BACnetArray[N] of BACnetTimeStamp	-	O	-
Profile_Name	CharacterString	-	O	-

© HMS Industrial Networks S.L.U. - All rights reserved
This information is subject to change without notice

5.3.18 Occupancy (Multistate Value Object Type)

It indicates the use or not of the occupancy function.

Property Identifier	Property Datatype	Value	ASHRAE	IBOX
Object_Identifier	BACnetObjectIdentifier	(Multi-state Output, 0)	R	R
Object_Name	CharacterString	“Occupancy”	R	R
Object_Type	BACnetObjectType	MULTISTATE_VALUE (19)	R	R
Present_Value	Unsigned	1 ~ 3	W	W
Description	CharacterString	-	O	-
Status_Flags	BACnetStatusFlags	{FALSE, FALSE, FALSE, FALSE}	R	R
Event_State	BACnetEventState	STATE_NORMAL (0)	R	R
Reliability	BACnetReliability	NO_FAULT_DETECTED (0)	O	R
Out_Of_Service	BOOLEAN	FALSE	R	R
Number_Of_States	Unsigned	3	R	R
State_Text	BACnetArray[N] of CharacterString	*Check **Occupancy setting table** below*	O	R
Priority_Array	BACnetPriorityArray	-	R	-
Relinquish_Default	Unsigned	-	R	-
Time_Delay	Unsigned	-	O	-
Notification_Class	Unsigned	-	O	-
Alarm_Value	Unsigned	-	O	-
Fault_Value	Unsigned		O	-
Event_Enable	BACnetEventTransitionBits	-	O	-
Acked_Transitions	BACnetEventTransitionBits	-	O	-
Notify_Type	BACnetNotifyType	-	O	-
Event_Time_Stamps	BACnetArray[N] of BACnetTimeStamp	-	O	-
Profile_Name	CharacterString	-	O	-

Occupancy values table

Check possible Occupancy values in the following correspondence table.

Present_Value	Contents displayed in State_Text
1	Occupied
2	Unoccupied
3	Disabled

© HMS Industrial Networks S.L.U. - All rights reserved
This information is subject to change without notice

5.3.19 OccupiedCoolSetPoint (Analog Value Object Type)

It indicates the current Setpoint when Cool mode is selected and Occupancy is enabled and the room is occupied.

Property Identifier	Property Datatype	Value	ASHRAE	IBOX
Object_Identifier	BACnetObjectIdentifier	(Analog Value, 1)	R	R
Object_Name	CharacterString	“OccupiedCoolSetPoint”	R	R
Object_Type	BACnetObjectType	ANALOG_VALUE (2)	R	R
Present_Value	REAL	0 .. 65535	R	R
Description	CharacterString	-	O	-
Status_Flags	BACnetStatusFlags	{FALSE, FALSE, FALSE, FALSE}	R	R
Event_State	BACnetEventState	STATE_NORMAL (0)	R	R
Reliability	BACnetReliability	NO_FAULT_DETECTED (0)	O	R
Out_Of_Service	BOOLEAN	FALSE	R	R
Update_Interval	Unsigned	-	O	-
Units	BACnetEngineeringUnits	Degrees Celsius (62)	R	R
Min_Pres_Value	REAL	-	O	-
Max_Pres_Value	REAL	-	O	-
Resolution	REAL	-	O	-
COV_Increment	REAL	0	O	W
Time_Delay	Unsigned	-	O	-
Notification_Class	Unsigned	-	O	-
High_Limit	REAL	-	O	-
Low_Limit	REAL	-	O	-
Deadband	REAL	-	O	-
Limit_Enable	BACnetLimitEnable	-	O	-
Event_Enable	BACnetEventTransitionBits	-	O	-
Acked_Transitions	BACnetEventTransitionBits	-	O	-
Notify_Type	BACnetNotifyType	-	O	-
Event_Time_Stamps	BACnetArray[N] of BACnetTimeStamp	-	O	-
Profile_Name	CharacterString	-	O	-

© HMS Industrial Networks S.L.U. - All rights reserved
This information is subject to change without notice

5.3.20 OccupiedHeatSetPoint (Analog Value Object Type)

It indicates the current Setpoint when Heat mode is selected, and Occupancy is enabled and the room is occupied.

Property Identifier	Property Datatype	Value	ASHRAE	IBOX
Object_Identifier	BACnetObjectIdentifier	(Analog Value, 2)	R	R
Object_Name	CharacterString	“OccupiedHeatSetPoint”	R	R
Object_Type	BACnetObjectType	ANALOG_VALUE (2)	R	R
Present_Value	REAL	0 .. 65535	R	R
Description	CharacterString	-	O	-
Status_Flags	BACnetStatusFlags	{FALSE, FALSE, FALSE, FALSE}	R	R
Event_State	BACnetEventState	STATE_NORMAL (0)	R	R
Reliability	BACnetReliability	NO_FAULT_DETECTED (0)	O	R
Out_Of_Service	BOOLEAN	FALSE	R	R
Update_Interval	Unsigned	-	O	-
Units	BACnetEngineeringUnits	Degrees Celsius (62)	R	R
Min_Pres_Value	REAL	-	O	-
Max_Pres_Value	REAL	-	O	-
Resolution	REAL	-	O	-
COV_Increment	REAL	0	O	W
Time_Delay	Unsigned	-	O	-
Notification_Class	Unsigned	-	O	-
High_Limit	REAL	-	O	-
Low_Limit	REAL	-	O	-
Deadband	REAL	-	O	-
Limit_Enable	BACnetLimitEnable	-	O	-
Event_Enable	BACnetEventTransitionBits	-	O	-
Acked_Transitions	BACnetEventTransitionBits	-	O	-
Notify_Type	BACnetNotifyType	-	O	-
Event_Time_Stamps	BACnetArray[N] of BACnetTimeStamp	-	O	-
Profile_Name	CharacterString	-	O	-

© HMS Industrial Networks S.L.U. - All rights reserved
This information is subject to change without notice

5.3.21 UnoccupiedCoolSetPoint (Analog Value Object Type)

It indicates the current Setpoint when Cool mode is selected, Occupancy is enabled, and the room is unoccupied.

Property Identifier	Property Datatype	Value	ASHRAE	IBOX
Object_Identifier	BACnetObjectIdentifier	(Analog Value, 3)	R	R
Object_Name	CharacterString	“UnoccupiedCoolSetPoint”	R	R
Object_Type	BACnetObjectType	ANALOG_VALUE (2)	R	R
Present_Value	REAL	0 .. 65535	R	R
Description	CharacterString	-	O	-
Status_Flags	BACnetStatusFlags	{FALSE, FALSE, FALSE, FALSE}	R	R
Event_State	BACnetEventState	STATE_NORMAL (0)	R	R
Reliability	BACnetReliability	NO_FAULT_DETECTED (0)	O	R
Out_Of_Service	BOOLEAN	FALSE	R	R
Update_Interval	Unsigned	-	O	-
Units	BACnetEngineeringUnits	Degrees Celsius (62)	R	R
Min_Pres_Value	REAL	-	O	-
Max_Pres_Value	REAL	-	O	-
Resolution	REAL	-	O	-
COV_Increment	REAL	0	O	W
Time_Delay	Unsigned	-	O	-
Notification_Class	Unsigned	-	O	-
High_Limit	REAL	-	O	-
Low_Limit	REAL	-	O	-
Deadband	REAL	-	O	-
Limit_Enable	BACnetLimitEnable	-	O	-
Event_Enable	BACnetEventTransitionBits	-	O	-
Acked_Transitions	BACnetEventTransitionBits	-	O	-
Notify_Type	BACnetNotifyType	-	O	-
Event_Time_Stamps	BACnetArray[N] of BACnetTimeStamp	-	O	-
Profile_Name	CharacterString	-	O	-

© HMS Industrial Networks S.L.U. - All rights reserved
This information is subject to change without notice

5.3.22 UnoccupiedHeatSetPoint (Analog Value Object Type)

It indicates the current Setpoint when Heat mode is selected, and Occupancy is enabled, and the room is unoccupied.

Property Identifier	Property Datatype	Value	ASHRAE	IBOX
Object_Identifier	BACnetObjectIdentifier	(Analog Value, 4)	R	R
Object_Name	CharacterString	“UnoccupiedHeatSetPoint”	R	R
Object_Type	BACnetObjectType	ANALOG_VALUE (2)	R	R
Present_Value	REAL	0 .. 65535	R	R
Description	CharacterString	-	O	-
Status_Flags	BACnetStatusFlags	{FALSE, FALSE, FALSE, FALSE}	R	R
Event_State	BACnetEventState	STATE_NORMAL (0)	R	R
Reliability	BACnetReliability	NO_FAULT_DETECTED (0)	O	R
Out_Of_Service	BOOLEAN	FALSE	R	R
Update_Interval	Unsigned	-	O	-
Units	BACnetEngineeringUnits	Degrees Celsius (62)	R	R
Min_Pres_Value	REAL	-	O	-
Max_Pres_Value	REAL	-	O	-
Resolution	REAL	-	O	-
COV_Increment	REAL	0	O	W
Time_Delay	Unsigned	-	O	-
Notification_Class	Unsigned	-	O	-
High_Limit	REAL	-	O	-
Low_Limit	REAL	-	O	-
Deadband	REAL	-	O	-
Limit_Enable	BACnetLimitEnable	-	O	-
Event_Enable	BACnetEventTransitionBits	-	O	-
Acked_Transitions	BACnetEventTransitionBits	-	O	-
Notify_Type	BACnetNotifyType	-	O	-
Event_Time_Stamps	BACnetArray[N] of BACnetTimeStamp	-	O	-
Profile_Name	CharacterString	-	O	-

© HMS Industrial Networks S.L.U. - All rights reserved
This information is subject to change without notice

5.3.23 OccupancyContinuousCheck (Binary Value Object Type)

It indicates if the system is continuously checking the setpoint and occupancy conditions.

Property Identifier	Property Datatype	Value	ASHRAE	IBOX
Object_Identifier	BACnetObjectIdentifier	(Binary Value, 0)	R	R
Object_Name	CharacterString	“OccupancyContinuousCheck”	R	R
Object_Type	BACnetObjectType	BINARY_VALUE (5)	R	R
Present_Value	BACnetBinaryPV	INACTIVE (0) / ACTIVE (1)	W	W
Description	CharacterString	-	O	-
Status_Flags	BACnetStatusFlags	{FALSE, FALSE, FALSE, FALSE}	R	R
Event_State	BACnetEventState	STATE_NORMAL (0)	R	R
Reliability	BACnetReliability	NO_FAULT_DETECTED (0)	O	R
Out_Of_Service	BOOLEAN	FALSE	R	R
Inactive_Text	CharacterString	"Disabled"	O	R
Active_Text	CharacterString	“Enabled"	O	R
Change_Of_State_Time	BACnetDatetime	-	O	-
Change_Of_State_Count	Unsigned	-	O	-
Time_Of_State_Count_Reset	BACnetDatetime	-	O	-
Elapsed_Active_Time	Unsigned	-	O	-
Time_Of_Active_Time_Reset	BACnetDatetime	-	O	-
Minimum_Off_Time	Unsigned32	-	O	-
Minimum_On_Time	Unsigned32	-	O	-
Priority_Array	BACnetPriorityArray	BACnetPriorityArray	R	-
Relinquish_Default	BACnetBinaryPV	INACTIVE (0)	R	-
Time_Delay	Unsigned	-	O	-
Notification_Class	Unsigned	-	O	-
Alarm_Value	BACnetBinaryPV	-	O	-
Event_Enable	BACnetEventTransitionBits	-	O	-
Acked_Transitions	BACnetEventTransitionBits	-	O	-
Notify_Type	BACnetNotifyType	-	O	-
Event_Time_Stamps	BACnetArray[N] of BACnetTimeStamp	-	O	-
Profile_Name	CharacterString	-	O	-

© HMS Industrial Networks S.L.U. - All rights reserved
This information is subject to change without notice

5.3.24 UnoccupiedDeadbandAction (Binary Value Object Type)

It indicates the action to be performed by the system when Unoccupancy is enabled and Room Temperature is within the deadband.

Property Identifier	Property Datatype	Value	ASHRAE	IBOX
Object_Identifier	BACnetObjectIdentifier	(Binary Value, 1)	R	R
Object_Name	CharacterString	“UnoccupiedDeadbandAction”	R	R
Object_Type	BACnetObjectType	BINARY_VALUE (5)	R	R
Present_Value	BACnetBinaryPV	INACTIVE (0) / ACTIVE (1)	W	W
Description	CharacterString	-	O	-
Status_Flags	BACnetStatusFlags	{FALSE, FALSE, FALSE, FALSE}	R	R
Event_State	BACnetEventState	STATE_NORMAL (0)	R	R
Reliability	BACnetReliability	NO_FAULT_DETECTED (0)	O	R
Out_Of_Service	BOOLEAN	FALSE	R	R
Inactive_Text	CharacterString	"Off"	O	R
Active_Text	CharacterString	“CurrentMode"	O	R
Change_Of_State_Time	BACnetDatetime	-	O	-
Change_Of_State_Count	Unsigned	-	O	-
Time_Of_State_Count_Reset	BACnetDatetime	-	O	-
Elapsed_Active_Time	Unsigned	-	O	-
Time_Of_Active_Time_Reset	BACnetDatetime	-	O	-
Minimum_Off_Time	Unsigned32	-	O	-
Minimum_On_Time	Unsigned32	-	O	-
Priority_Array	BACnetPriorityArray	BACnetPriorityArray	R	-
Relinquish_Default	BACnetBinaryPV	INACTIVE (0)	R	-
Time_Delay	Unsigned	-	O	-
Notification_Class	Unsigned	-	O	-
Alarm_Value	BACnetBinaryPV	-	O	-
Event_Enable	BACnetEventTransitionBits	-	O	-
Acked_Transitions	BACnetEventTransitionBits	-	O	-
Notify_Type	BACnetNotifyType	-	O	-
Event_Time_Stamps	BACnetArray[N] ofBACnetTimeStamp	-	O	-
Profile_Name	CharacterString	-	O	-

© HMS Industrial Networks S.L.U. - All rights reserved
This information is subject to change without notice

5.3.25 RemoteControllerProhibit_status (Multistate Input Object Type)

It indicates the status prohibition of the remote controller.

Property Identifier	Property Datatype	Value	ASHRAE	IBOX
Object_Identifier	BACnetObjectIdentifier	(Multi-state Input, 6)	R	R
Object_Name	CharacterString	“RemoteControllerProhibit_status”	R	R
Object_Type	BACnetObjectType	MULTISTATE_INPUT (13)	R	R
Present_Value	Unsigned	1 ~ 2	R	R
Description	CharacterString	-	O	-
Device_Type	CharacterString	-	O	-
Status_Flags	BACnetStatusFlags	{FALSE, FALSE/TRUE, FALSE, FALSE}	R	R
Event_State	BACnetEventState	STATE_NORMAL (0)	R	R
Reliability	BACnetReliability	NO_FAULT_DETECTED (0), UNRELIABLE_OTHER (7)	O	R
Out_Of_Service	BOOLEAN	FALSE/TRUE	R	R
Number_Of_States	Unsigned	2	R	R
State_Text	BACnetArray[N] of CharacterString	*Check **Remote Controller Prohibit Status table** below.*	O	R
Time_Delay	Unsigned	-	O	-
Notification_Class	Unsigned	-	O	-
Alarm_Values	List of Unsigned	-	O	-
Fault_Values	List of Unsigned	-	O	-
Event_Enable	BACnetEventTransitionBits	-	O	-
Acked_Transitions	BACnetEventTransitionBits	-	O	-
Notify_Type	BACnetNotifyType	-	O	-
Event_Time_Stamps	BACnetArray[N] of BACnetTimeStamp	-	O	-
Profile_Name	CharacterString	-	O	-

Remote controller prohibit status table

Remote controller prohibit interpretation is possible using the value in the following correspondence table.

Present_Value	Contents displayed in State_Text
1	Unlocked
2	Locked

© HMS Industrial Networks S.L.U. - All rights reserved
This information is subject to change without notice

5.3.26 RemoteControllerProhibit_command (Multistate Output Object Type)

It allows to control the prohibition of the remote controller.

Property Identifier	Property Datatype	Value	ASHRAE	IBOX
Object_Identifier	BACnetObjectIdentifier	(Multi-state Output, 5)	R	R
Object_Name	CharacterString	“RemoteControllerProhibit_command”	R	R
Object_Type	BACnetObjectType	MULTISTATE_OUTPUT (14)	R	R
Present_Value	Unsigned	1 ~ 2	W	W
Description	CharacterString	-	O	-
Device_Type	CharacterString	-	O	-
Status_Flags	BACnetStatusFlags	{FALSE, FALSE, FALSE, FALSE}	R	R
Event_State	BACnetEventState	STATE_NORMAL (0)	R	R
Reliability	BACnetReliability	NO_FAULT_DETECTED (0)	O	R
Out_Of_Service	BOOLEAN	FALSE	R	R
Number_Of_States	Unsigned	2	R	R
State_Text	BACnetArray[N] of CharacterString	*Check **Remote Controller Prohibit Command setting table** below.*	O	R
Priority_Array	BACnetPriorityArray	-	R	R
Relinquish_Default	Unsigned	-	R	R
Time_Delay	Unsigned	-	O	-
Notification_Class	Unsigned	-	O	-
Feedback_Value	Unsigned	-	O	-
Event_Enable	BACnetEventTransitionBits	-	O	-
Acked_Transitions	BACnetEventTransitionBits	-	O	-
Notify_Type	BACnetNotifyType	-	O	-
Event_Time_Stamps	BACnetArray[N] of BACnetTimeStamp	-	O	-
Profile_Name	CharacterString	-	O	-

Remote controller prohibit command setting table

Remote controller prohibit interpretation is possible using the value in the following correspondence table.

Present_Value	Contents displayed in State_Text
1	Unlocked
2	Locked

© HMS Industrial Networks S.L.U. - All rights reserved
This information is subject to change without notice

5.3.27 DIP_SW_S1_status (Analog Input Object Type)

It indicates the status of the DIP switch 1 in decimal value. To get the micro-switch position, just translate the value into binary. It is only read after booting the device.

Property Identifier	Property Datatype	Value	ASHRAE	IBOX
Object_Identifier	BACnetObjectIdentifier	(Analog Input, 9)	R	R
Object_Name	CharacterString	“DIP_SW_S1_status”	R	R
Object_Type	BACnetObjectType	ANALOG_INPUT (0)	R	R
Present_Value	BACnetBinaryPV	0…255*	R	R
Description	CharacterString	-	O	-
Device_Type	CharacterString	-	O	-
Status_Flags	BACnetStatusFlags	{FALSE, FALSE, FALSE, FALSE}	R	R
Event_State	BACnetEventState	STATE_NORMAL (0)	R	R
Reliability	BACnetReliability	NO_FAULT_DETECTED (0)	O	R
Out_Of_Service	BOOLEAN	FALSE / TRUE	R	R
Polarity	BACnetPolarity	NORMAL (0)	R	R
Inactive_Text	CharacterString		O	R
Active_Text	CharacterString		O	R
Change_Of_State_Time	BACnetDatetime	-	O	-
Change_Of_State_Count	Unsigned	-	O	-
Time_Of_State_Count_Reset	BACnetDatetime	-	O	-
Elapsed_Active_Time	Unsigned	-	O	-
Time_Of_Active_Time_Reset	BACnetDatetime	-	O	-
Time_Delay	Unsigned	-	O	-
Notification_Class	Unsigned	-	O	-
Alarm_Value	BACnetBinaryPV	-	O	-
Event_Enable	BACnetEventTransitionBits	-	O	-
Acked_Transitions	BACnetEventTransitionBits	-	O	-
Notify_Type	BACnetNotifyType	-	O	-
Event_Time_Stamps	BACnetArray[N] of BACnetTimeStamp	-	O	-
Profile_Name	CharacterString	-	O	-
Units	BACnetEngineeringUnits	No units (95)	R	R
COV_Increment	REAL	0	O	W

© HMS Industrial Networks S.L.U. - All rights reserved
This information is subject to change without notice

5.3.28 DIP_SW_S2_status (Analog Input Object Type)

It indicates the status of DIP switch 2 in decimal value. To get the micro-switch position, just translate the value into binary. It is only read after booting the device.

Property Identifier	Property Datatype	Value	ASHRAE	IBOX
Object_Identifier	BACnetObjectIdentifier	(Analog Input, 10)	R	R
Object_Name	CharacterString	DIP_SW_S2_status	R	R
Object_Type	BACnetObjectType	ANALOG_INPUT (0)	R	R
Present_Value	BACnetBinaryPV	0…255*	R	R
Description	CharacterString	-	O	-
Device_Type	CharacterString	-	O	-
Status_Flags	BACnetStatusFlags	{FALSE, FALSE, FALSE, FALSE}	R	R
Event_State	BACnetEventState	STATE_NORMAL (0)	R	R
Reliability	BACnetReliability	NO_FAULT_DETECTED (0)	O	R
Out_Of_Service	BOOLEAN	FALSE	R	R
Polarity	BACnetPolarity	NORMAL (0)	R	R
Inactive_Text	CharacterString		O	R
Active_Text	CharacterString		O	R
Change_Of_State_Time	BACnetDatetime	-	O	-
Change_Of_State_Count	Unsigned	-	O	-
Time_Of_State_Count_Reset	BACnetDatetime	-	O	-
Elapsed_Active_Time	Unsigned	-	O	-
Time_Of_Active_Time_Reset	BACnetDatetime	-	O	-
Time_Delay	Unsigned	-	O	-
Notification_Class	Unsigned	-	O	-
Alarm_Value	BACnetBinaryPV	-	O	-
Event_Enable	BACnetEventTransitionBits	-	O	-
Acked_Transitions	BACnetEventTransitionBits	-	O	-
Notify_Type	BACnetNotifyType	-	O	-
Event_Time_Stamps	BACnetArray[N] of BACnetTimeStamp	-	O	-
Profile_Name	CharacterString	-	O	-
Units	BACnetEngineeringUnits	No units (95)	R	R
COV_Increment	REAL	0	O	W

© HMS Industrial Networks S.L.U. - All rights reserved
This information is subject to change without notice

5.3.29 SerialNumber (Analog Input Object Type)

It indicates the serial number of the device. Serial number follows the next rule **000KXXXXX**, where:

- **000K** is constant and not included in Present Value property.
- **XXXXX** is the unique serial number of the device. It is the information provided through the Present Value.

Property Identifier	Property Datatype	Value	ASHRAE	IBOX
Object_Identifier	BACnetObjectIdentifier	(Analog Input, 11)	R	R
Object_Name	CharacterString	SerialNumber	R	R
Object_Type	BACnetObjectType	ANALOG_INPUT (0)	R	R
Present_Value	BACnetBinaryPV	00000…99999	R	R
Description	CharacterString	-	O	-
Device_Type	CharacterString	-	O	-
Status_Flags	BACnetStatusFlags	{FALSE, FALSE, FALSE, FALSE}	R	R
Event_State	BACnetEventState	STATE_NORMAL (0)	R	R
Reliability	BACnetReliability	NO_FAULT_DETECTED (0)	O	R
Out_Of_Service	BOOLEAN	FALSE	R	R
Polarity	BACnetPolarity	NORMAL (0)	R	R
Inactive_Text	CharacterString		O	R
Active_Text	CharacterString		O	R
Change_Of_State_Time	BACnetDatetime	-	O	-
Change_Of_State_Count	Unsigned	-	O	-
Time_Of_State_Count_Reset	BACnetDatetime	-	O	-
Elapsed_Active_Time	Unsigned	-	O	-
Time_Of_Active_Time_Reset	BACnetDatetime	-	O	-
Time_Delay	Unsigned	-	O	-
Notification_Class	Unsigned	-	O	-
Alarm_Value	BACnetBinaryPV	-	O	-
Event_Enable	BACnetEventTransitionBits	-	O	-
Acked_Transitions	BACnetEventTransitionBits	-	O	-
Notify_Type	BACnetNotifyType	-	O	-
Event_Time_Stamps	BACnetArray[N] of BACnetTimeStamp	-	O	-
Profile_Name	CharacterString	-	O	-
Units	BACnetEngineeringUnits	No units (95)	R	R
COV_Increment	REAL	0	O	W

© HMS Industrial Networks S.L.U. - All rights reserved
This information is subject to change without notice

5.3.30 AC IU address (Multistate Value Object Type)

It indicates the address of the indoor unit in the Midea system.

Property Identifier	Property Datatype	Value	ASHRAE	IBOX
Object_Identifier	BACnetObjectIdentifier	(Multi-state Output, 1)	R	R
Object_Name	CharacterString	"AC IU address"	R	R
Object_Type	BACnetObjectType	MULTISTATE_VALUE (19)	R	R
Present_Value	Unsigned	1 ~ 64	W	W
Description	CharacterString	-	O	-
Status_Flags	BACnetStatusFlags	{FALSE, FALSE, FALSE, FALSE}	R	R
Event_State	BACnetEventState	STATE_NORMAL (0)	R	R
Reliability	BACnetReliability	NO_FAULT_DETECTED (0)	O	R
Out_Of_Service	BOOLEAN	FALSE	R	R
Number_Of_States	Unsigned	64	R	R
State_Text	BACnetArray[N] of CharacterString	*Check **AC IU address setting table** below*	O	R
Priority_Array	BACnetPriorityArray	-	R	-
Relinquish_Default	Unsigned	-	R	-
Time_Delay	Unsigned	-	O	-
Notification_Class	Unsigned	-	O	-
Alarm_Value	Unsigned	-	O	-
Fault_Value	Unsigned		O	-
Event_Enable	BACnetEventTransitionBits	-	O	-
Acked_Transitions	BACnetEventTransitionBits	-	O	-
Notify_Type	BACnetNotifyType	-	O	-
Event_Time_Stamps	BACnetArray[N] of BACnetTimeStamp	-	O	-
Profile_Name	CharacterString	-	O	-

AC IU address values table

Check AC indoor unit address values in the following correspondence table.

Present_Value	Contents displayed in State_Text	AC Indoor unit address
1	0	0
2	1	1
3	2	2
…	…	…
62	61	61
63	62	62
64	63	63

© HMS Industrial Networks S.L.U. - All rights reserved
This information is subject to change without notice

5.3.31 Midea_DIP_SW_setting (Multistate Input Object Type)

It indicates the DIP-SW-setting for the Midea system.

Property Identifier	Property Datatype	Value	ASHRAE	IBOX
Object_Identifier	BACnetObjectIdentifier	(Multi-state Input, 11)	R	R
Object_Name	CharacterString	"Midea_DIP_SW_setting"	R	R
Object_Type	BACnetObjectType	MULTISTATE_INPUT(13)	R	R
Present_Value	Unsigned	1 ~ 5	R	R
Description	CharacterString	-	O	-
Device_Type	CharacterString	-	O	-
Status_Flags	BACnetStatusFlags	{FALSE, FALSE/TRUE, FALSE, FALSE}	R	R
Event_State	BACnetEventState	STATE_NORMAL (0)	R	R
Reliability	BACnetReliability	NO_FAULT_DETECTED (0), UNRELIABLE_OTHER (7)	O	R
Out_Of_Service	BOOLEAN	FALSE/TRUE	R	R
Number_Of_States	Unsigned	5	R	R
State_Text	BACnetArray[N] of CharacterString	*Check **Midea DIP SW setting table** below.*	O	R
Time_Delay	Unsigned	-	O	-
Notification_Class	Unsigned	-	O	-
Alarm_Values	List of Unsigned	-	O	-
Fault_Values	List of Unsigned	-	O	-
Event_Enable	BACnetEventTransitionBits	-	O	-
Acked_Transitions	BACnetEventTransitionBits	-	O	-
Notify_Type	BACnetNotifyType	-	O	-
Event_Time_Stamps	BACnetArray[N] of BACnetTimeStamp	-	O	-
Profile_Name	CharacterString	-	O	-

Midea DIP SW setting table

Midea DIP SW setting table interpretation is possible using the value in the following correspondence table.

Present_Value	Contents displayed in State_Text
1	Auto (detecting)
2	Auto V4
3	Auto V6
4	V4
5	V6

© HMS Industrial Networks S.L.U. - All rights reserved
This information is subject to change without notice

5.4 Considerations on Temperature Objects

The behavior of the temperature objects is described in detail in this section.

- **Setpoint_command (Analog Output Object Type)**
  This is the adjustable temperature setpoint value that must be required by the user.

  Present value can be read or written.

- **RoomTemperature_status (Analog Input Object Type)**
  This object reports the temperature that is currently used by the Midea indoor unit as the reference of its own control loop. Depending on the configuration of the indoor unit, this value can be the temperature reported by the sensor on the return path of the Midea indoor unit or the sensor of its remote controller.

  Present value can be read only.

- **RoomTemperature_command (Analog Output Object Type)**
  This object allows us to provide an external temperature's sensor from the BACnet side. Midea indoor unit does not allow, on devices like INBACMID001I100 connected to XYE bus, to provide directly a temperature to be used as a reference of the control loop of the AC indoor unit. To overcome this limitation and enable the usage of an external temperature sensor, INBACMID001I100 applies the following mechanism called "Virtual Temperature":

  - After receiving ***RoomTemperature_command*** and ***Setpoint_command***, INBACMID001I100 is going to estimate the appropriate temperature setpoint.

Example. If a **Setpoint_command = 22°C**, and **RoomTemperature_command = 20°C** are received, INBACMID001I100 will assume that the user is demanding a **+2°C** increase in temperature.

  - By knowing at any time, the reference temperature currently used by the indoor unit (the return temperature), INBACMID001I100 can calculate the required temperature setpoint needed to apply the decrease/increase on the real temperature and reach the temperature chosen by the user.

Following the example, if INBACMID001I100 reads a **RoomTemperature_command** = **24°C** in the indoor unit, it will apply a final setpoint of **24°C + 2°C = 26°C.**

  - At this moment, every time that INBACMID001I100 detects a change on the ambient temperature reported by the indoor unit, it will also change the required setpoint to keep the temperature required by the user at any time.

If we follow the example, if INBACMID001I100 receives a new temperature value coming from the indoor unit of **25°C**, INBACMID001I100 will automatically adjust the temperature setpoint required of the AC indoor unit to **25°C + 2°C = 27°C**.

  - In general, INBACMID001I100 is constantly applying the "Virtual Temperature" formula:

$$S_{AC} = S_u - (T_u - T_{AC})$$

Where:
S_{AC} - setpoint value currently applied to the indoor unit
S_u - setpoint value
T_u - external temperature reference written at BACnet side
T_{AC} - ambient temperature that the indoor unit is using as the reference of its own control loop

When INBACMID001I100 detects a change in any of the values of {S_u, T_u, T_{AC}}, it will send the new setpoint (S_{AC}) to the indoor unit.

  - After a device booting, Present value for **RoomTemperature_command** has a value 0 and the property "Realibility" is dislayed as *Unreliable Other* (7). This "Realibility" status means that no external temperature reference has being provided to the object, so the system is not applying the Virtual temperature function. However, after receiving the first value, "Realibility" wil change into *Nofault Detected (0).* After that, any value can be used in the temperature range, including 0.

© HMS Industrial Networks S.L.U. - All rights reserved
This information is subject to change without notice

- **Setpoint_status (Analog Input Object Type)**
- This register will show the real temperature sent to the indoor unit. It is the temperature that the AC unit is applying as a setpoint. Its behavior depends on virtual temperature function:
    - If virtual temperature in not in use, its value will be the same that **Setpoint_command** or the one sent by different means (IR remote, wall-mounted remote, etc.).
    - If virtual temperature is being used, the value will be the real setpoint modified by this function according to the formula explained above.

Present value can be read only.

Moreover, notice that temperature's values of all these four objects are expressed according to the temperature´s format configured through its onboard DIP-Switches (See 6 CONNECTIONS AND SWITCHES). The following formats are possible:

- **Celsius value**: Value in BACnet object is the temperature value in Celsius (i.e. a value "22" in the BACnet object must be interpreted as 22ºC).

- **Fahrenheit value**: Value in BACnet object is the temperature value in Fahrenheit (i.e. a value "72" in the BACnet object must be interpreted as 72ºF (~22ºC).

© HMS Industrial Networks S.L.U. - All rights reserved
This information is subject to change without notice

6 Connections and switches

6.1 Connect to the XYE terminals

Disconnect mains power from the AC unit.

Connect the interface to XYE terminals in the indoor unit. The XYE is a three-wire bus of the Midea system. Respect the XYE polarity when connecting the interface.

⚠ ***Important***: The INBACMID001I100 acts as a central controller. Since the XYE bus supports only one central controller, the only way to use another central controller in addition to the gateway is to add an XYE Extension Kit (not included).

⚠ ***Important***: Remember that switch changes are only applied after an Intesis power cycle.

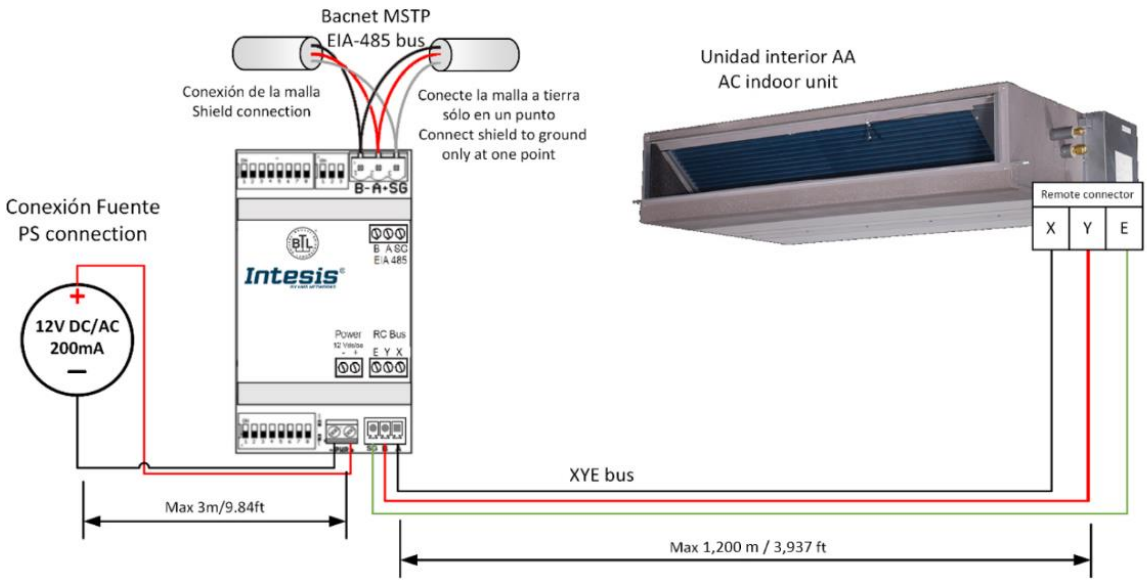

Figure 2.2 Connection diagram

The power supply must comply with NEC Class 2 or Limited Power Source (LPS) and SELV rated power supply. Respect the polarity. Always apply a voltage within the range admitted and of enough power (12V DC/AC, min. 200 mA).

SW1 – Device and AC settings

Binary value b1…b5	Switches 1 2 3 4 5 6 7 8	Description
00xxxxxx	↓ ↓ x x x x x x	Auto Midea V4/V6 detection (valor por defecto - default value)
01xxxxxx	↓ ↑ x x x x x x	Reserved
10xxxxxx	↑ ↓ x x x x x x	Force Midea V4
11xxxxxx	↑ ↑ x x x x x x	Force Midea V6
xx0xxxxx	x x ↓ x x x x x	Not used (valor por defecto - default value)
xx1xxxxx	x x ↑ x x x x x	Not used
xxx0xxxx	x x x ↓ x x x x	Not used (valor por defecto - default value)
xxx1xxxx	x x x ↑ x x x x	Not used
xxxx0xxx	x x x x ↓ x x x	Low Power Mode
xxxx1xxx	x x x x ↑ x x x	High Performance mode (valor por defecto - default value)

⚠ ***Important***: *This switch determines the performance and consumption of the device. Running in **High Performance Mode** means maximum consumption and maximun device performance. This should be the mode stablished. If it is necessary to decrease device consumption, change the mode to **Low Power Mode**.*

SW2 – Temperature magnitude (°C/°F)

Binary value b_0…b_1	*Switches* 1 2 3 4 5 6 7 8	Description
xxxxxxx0	x x x x x x x ↓	Temperature values in BACnet are represented in Celsius degrees (Default value)
xxxxxxx1	x x x x x x x ↑	Temperature values in BACnet are represented in Fahrenheit degrees

© HMS Industrial Networks S.L.U. - All rights reserved
This information is subject to change without notice

6.2 Connect to BACnet MS/TP

Connect the EIA485 bus wires to the plug-in terminal block (EIA485) of INBACMID001I100; respect the polarity on this connection (A+ and B-). Connect the ground signal to the plug-in terminal block (SG).

Respect the maximum distance of 1.200 meters for the bus, no loop or star topologies are allowed for EIA485 bus.

EIA-485 bus. Termination resistors and Fail-Safe Biasing mechanism

EIA-485 bus requires a 120Ω terminator resistor at each end of the bus to avoid signal reflections.

In order to prevent fail status detections by the receivers, which are *"listening"* to the bus, when all the transmitters' outputs are in three-state (high impedance), a fail-safe biasing mechanism is required. This mechanism provides a safe status (a correct voltage level) in the bus when all the transmitters' outputs are in three-state.

The INBACMID001I100 gateway includes an on-board terminator resistor of 120Ω that can be connected to the EIA-485 bus by using DIP-switch SW3.

Some BACnet MS/TP EIA-485 Master devices can provide also internal 120Ω terminator resistor and/or fail-safe biasing. Check the technical documentation of the Master device connected to the EIA-485 network in each case.

SW3 settings

Binary value $b_2...b_0$	Switches 1 2 3	Description
0xx	↓ x x	EIA485 bus without termination resistor. The gateway is not at one end of the EIA485 bus (default value)
1xx	↑ x x	120 Ω termination resistor active. The gateway is at one end of the EIA485 bus
x00	x ↓ ↓	No bus polarization (Default value)
x11	x ↑ ↑	Bus polarization active

Please, check configuration on **SW2** and **SW3** before connecting to BACnet MS/TP.

6.2.1 MS/TP MAC address switch configuration

MAC address can be configured using switch **SW2**

Binary value $b_0...b_7$	*Switches* 1 2 3 4 5 6 7 8	MAC address
0000000x	↓ ↓ ↓ ↓ ↓ ↓ ↓ x	0 (Default value)
1000000x	↑ ↓ ↓ ↓ ↓ ↓ ↓ x	1
0100000x	↓ ↑ ↓ ↓ ↓ ↓ ↓ x	2
1100000x	↑ ↑ ↓ ↓ ↓ ↓ ↓ x	3
….	….	…
1011111x	↑ ↓ ↑ ↑ ↑ ↑ ↑ x	125
0111111x	↓ ↑ ↑ ↑ ↑ ↑ ↑ x	126
1111111x	↑ ↑ ↑ ↑ ↑ ↑ ↑ x	127

The MAC address selected my affect on the Device Instance. If the "Auto Device Instance" is used, keep in mind that the Device Instance will be build using the "Device Instance Base" + the address selected in SWP2 P1-P7. Please, check section **5.3.1 MIDEA AC GATEWAY (DEVICE OBJECT TYPE)** for more information.

© HMS Industrial Networks S.L.U. - All rights reserved
This information is subject to change without notice

6.2.2 BACnet MS/TP baudrate

Select the right baudrate for BACnet MS/TP communication using switch **SW1**.

Binary value $b_5...b_4$	Switches 1 2 3 4 5 6 7 8	Description
xxxxx000	x x x x x ↓ ↓ ↓	Autobaudrate (default value) *
xxxxx100	x x x x x ↑ ↓ ↓	9600 bps
xxxxx010	x x x x x ↓ ↑ ↓	192000 bps
xxxxx110	x x x x x ↑ ↑ ↓	38400 bps
xxxxx001	x x x x x ↓ ↓ ↑	57600 bps
xxxxx101	x x x x x ↑ ↓ ↑	76800 bps
xxxxx011	x x x x x ↓ ↑ ↑	115200 bps
xxxxx111	x x x x x ↑ ↑ ↑	Autobaudrate *

* Note: If Autobaudrate is selected, the INBACMID001I100 will look for another BACnet MS/TP device with a fixed baudrate to match this value. Once detected, the baudrate will not be modified until a device reset is produced.

6.3 Connect to an external power supply

It is necessary to use an external power supply connected to PWR terminals. Respect the polarity (- +).
The power supply must comply with NEC Class 2 or Limited Power Source (LPS) and SELV rated power supply. Respect the polarity. Apply always a voltage within the range admitted and of enough power (12V DC/AC, min. 200 mA).

7 Set-up process and troubleshooting

7.1 Pre-requisites

For a BACnet MS/TP integration, it is necessary to have the BACnet MS/TP Master device operative and well connected to the BACnet MS/TP port of the INBACMID001I100.

Items supplied by HMS Networks for this integration are:

- Intesis INBACMID001I100 interface with Midea AC external protocol firmware loaded.
- Product documentation.

7.2 Physical checking

First point to check are the gateway physical connections:

1.- Make sure that the gateway is correctly connected to the AC unit.

2.- Check that the AC unit is connected to mains.

3.- Check the EIA485 connection from the gateway to the BACnet MS/TP. Remember to verify polarity and terminal resistors configuration.

4.- Check that the interface is properly connected to an external power supply verifying the polary.

© HMS Industrial Networks S.L.U. - All rights reserved
This information is subject to change without notice

7.3 LED status

There are two LEDs at the bottom of the device. On start up, all LEDs blink once and then turn off. After that booting, LED status will be updated.

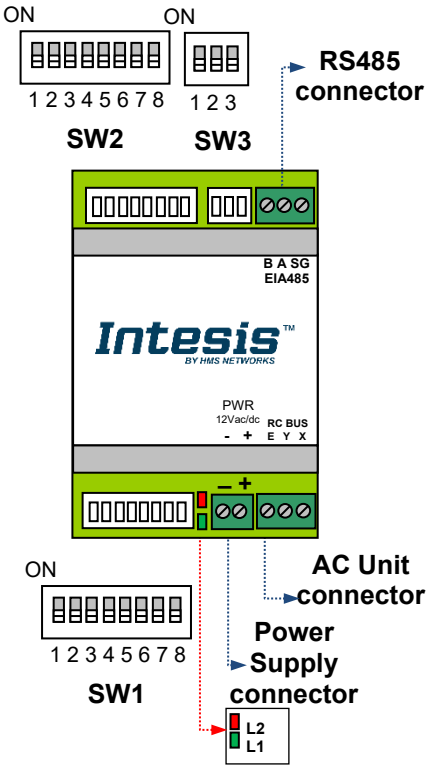

Please, check the table below for more information:

LED	Status	Description
L1 (green)	ON Steady	BACnet MS/TP link established
	Blinking	Activity on the BACnet MS/TP bus
	OFF	BACnet MS/TP link not performed
L2 (red)	ON Steady	Communication error
	Blinking	AC Error
	Flashing	Communication OK

© HMS Industrial Networks S.L.U. - All rights reserved
This information is subject to change without notice

7.4 Occupancy

Each indoor unit has its own occupancy signal. Remember that this signal needs to be feed by an external sensor which indicates if there is presense or not (occupancy). This signal is processed directly in the INBACMID001I100.

When occupancy mode is active, according to current room temperature it will set the mode, setpoint and on/off, for example:

- Room Temperature > OCS: Setpoint = OCS, Mode = Cool, On/Off = On
- Room Temperature < OHS: Setpoint = OHS, Mode = Heat, On/Off = On
- OCS < Room Temperature > OHS: Setpoint = OCS/OHS depending on current mode (if Fan or Dry mode is active => no setpoint is sent), On/Off = On

When unoccupancy mode is active, according to current room temperature it will set the mode, setpoint and on/off, for example:

- Room Temperature > UCS: Setpoint = UCS, Mode = Cool, On/Off = On
- Room Temperature < UHS: Setpoint = UHS, Mode = Heat, On/Off = On
- UCS < Room Temperature > UHS: Setpoint = UCS/UHS depending on current mode (if Fan or Dry mode is active => no setpoint is sent), On/Off = On (if Unoccupancy Deadband Action is = 1)

These checks will be done each time the indoor unit occupancy status is changed, and if ***check continuously*** checkbox is checked, also each time the room temperature changes.

The configuration set on the occupany signals is applied from the very first moment the occupancy signal is enabled until the user changes the setpoint, mode or the On/Off signal, which disables occupancy functionality.

The minimum difference between Cool and Heat SetPoints must be 2ºC/4ºF.

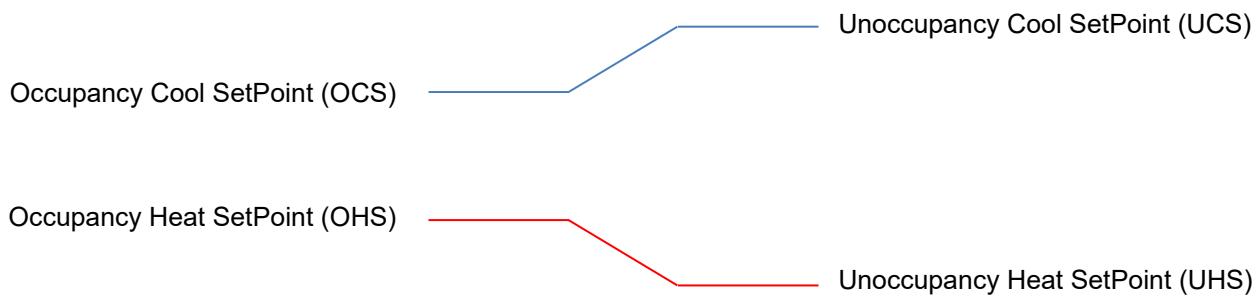

© HMS Industrial Networks S.L.U. - All rights reserved
This information is subject to change without notice

8 Restore factory Settings

8.1 Restore factory Settings

To restore device factory settings, it is necessary to complete the following process:

1. Set **SW1** and **SW2** DIP switches to ON position.
2. Reset the device performing a POWER OFF and a POWER ON.
3. After booting, the LEDs (green+red+yellow) should be blinking in an S.O.S Morse sequence.
4. At this moment, a 30-second countdown will start to set all SW1 and SW2 switches to OFF position.
5. By completing these previous steps, the device will be restored to Factory Settings.

To continue working with the device, remember to proceed as usual:
1. Set again switches to reach user desired configuration
2. Reset the device (POWER OFF + POWER ON).

© HMS Industrial Networks S.L.U. - All rights reserved
This information is subject to change without notice

9 AC Unit Types compatibility

Use the compatibility tool to find out which Midea units are compatible with our gateway.

https://compatibility.intesis.com/

© HMS Industrial Networks S.L.U. - All rights reserved
This information is subject to change without notice

10 Mechanical & electrical characteristics

Housing	Plastic, type PC (UL 94 V-0) Net dimensions (hxwxd): 93 x 53 x 58 mm / 3.7” x 2.1” x 2.3” Color: Light Grey. RAL 7035	Operation Temperature	0°C to +60°C
Weight	85 g	Stock Temperature	-20°C to +85°C
Mounting	• Wall • DIN rail EN60715 TH35	Operational Humidity	5% to 95% RH, with no condensation
Terminal Wiring (for low-voltage signals)	For terminal: solid wires or stranded wires (twisted or with ferrule) One core: 0.2 mm^2… 2.5 mm^2 Two cores: 0.2 mm^2… 1.5 mm^2 Three cores: Not allowed	Stock Humidity	<95% RH, with no condensation
BACnet MS/TP port	1 x Serial EIA485 Plug-in screw terminal block (3 poles): B, A, SG SELV	Isolation voltage	1500 VDC. between RS485 and RC5 bus
AC unit port	1 x RC5 or Serial EIA-485 Plug-in screw terminal block (3 poles): SG, B, A SELV	Isolation resistance	1000 MΩ
Switch 1 (SW1)	1 x DIP Switch for AC features and RC5 bus baud rate	Protection	IP20 (IEC60529)
Switch 2 (SW2)	1 x DIP Switch for bus device address and temperature information	External power supply	12 VDC/AC 0.2A NEC Class 2 or Limited Power Source (PS2) and SELV rated PS. Max. 3 meters between device and external PS
Switch 3 (SW3)	1 x DIP Switch for primary EIA bus configuration	LED indicators	2 x Onboard LED - Operational status

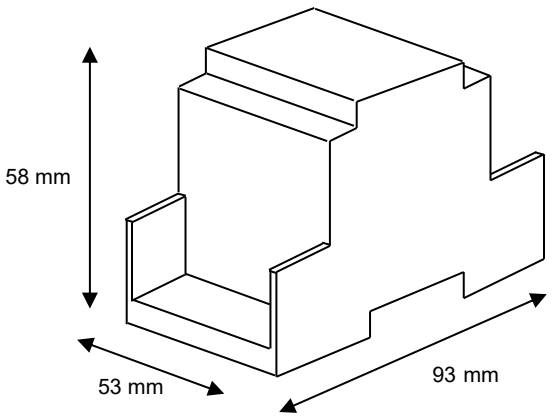

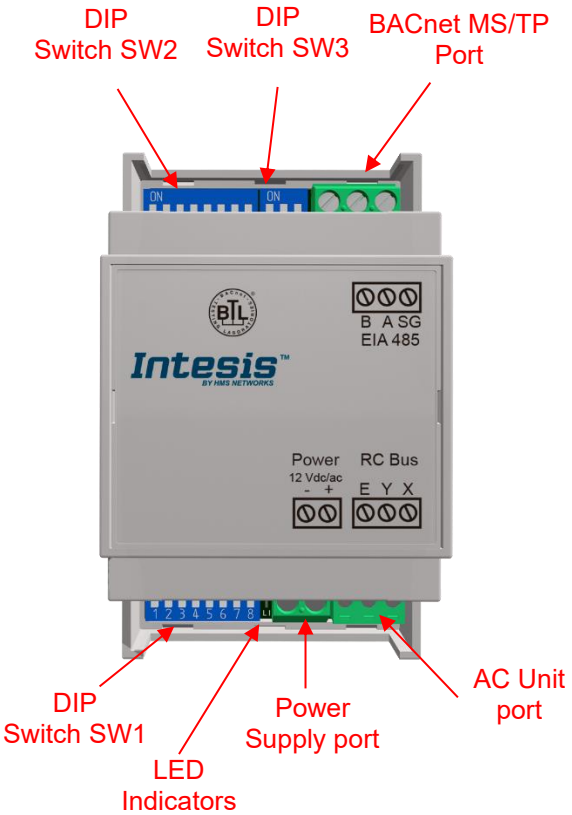

© HMS Industrial Networks S.L.U. - All rights reserved
This information is subject to change without notice

11 Error codes

Below you can find a list of error codes from the Midea air conditioning system.

Error Code	Error in Remote Controller	Error description
0	N/A	No active error
1	E0	Phase error or error in the phase sequence
2	E1	Communication error
3	E2	T1 sensor error
4	E3	T2A sensor error
5	E4	T2B sensor error
6	E5	T3 temperature and T4 temperature Compressor discharge temperature sensors error
7	E6	Zero cross error detection
8	E7	EEPROM memory error
9	E8	Indoor fan speeds out of control
10	E9	Communication error between the main panel and the visualization panel
11	EA	Compressor's current overload error (4 times)
12	EB	Inverter module protection
13	EC	Cooling error
14	ED	Outdoor unit fault protection
15	EE	Water level fault detection
16	EF	Other errors
17	P0	Vaporizer temperature protection
18	P1	Thawing or cold air protection
19	P2	Condenser high temperatures protection
20	P3	Compressor temperature protection
21	P4	Evacuation duct temperature protection
22	P5	Discharge high pressure protection
23	P6	Discharge low pressure protection
24	P7	Current overload or under load protection
25	P8	Compressor's current overload protection
26	P9	Reserved
27	PA	Reserved
28	PB	Reserved
29	PC	Reserved
30	PD	Reserved
31	PE	Reserved
32	PF	Other protection measures
65535 (-1)	N/A	Error in the communication of INMBSMID---I000 with the AC unit

In case you detect an error code not listed, contact your nearest Midea technical support service for more information on the error meaning.

© HMS Industrial Networks S.L.U. - All rights reserved
This information is subject to change without notice