BACnet IP Server

BACnet MS/TP

USER MANUAL

Issue date: 10/2025 v1.6

ENGLISH

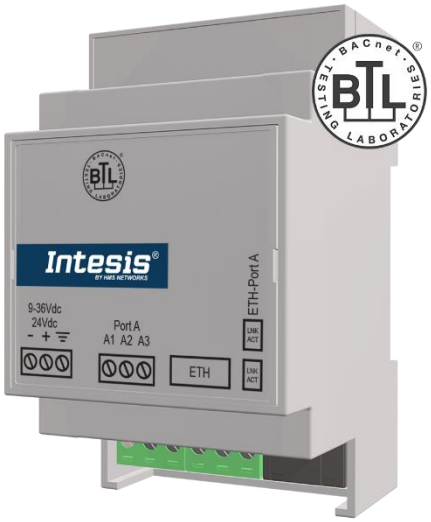

14 rue Edouard Petit
42000 St-Etienne

Tel : +33 477 92 03 56
Email : contact@rg2i.com
www.rg2i.com

Important User Information

Disclaimer

The information in this document is for informational purposes only. Please inform HMS Industrial Networks of any inaccuracies or omissions found in this document. HMS Industrial Networks disclaims any responsibility or liability for any errors that may appear in this document.

HMS Industrial Networks reserves the right to modify its products in line with its policy of continuous product development. The information in this document shall therefore not be construed as a commitment on the part of HMS Industrial Networks and is subject to change without notice. HMS Industrial Networks makes no commitment to update or keep current the information in this document.

The data, examples and illustrations found in this document are included for illustrative purposes and are only intended to help improve understanding of the functionality and handling of the product. In view of the wide range of possible applications of the product, and because of the many variables and requirements associated with any particular implementation, HMS Industrial Networks cannot assume responsibility or liability for actual use based on the data, examples or illustrations included in this document nor for any damages incurred during installation of the product. Those responsible for the use of the product must acquire sufficient knowledge in order to ensure that the product is used correctly in their specific application and that the application meets all performance and safety requirements including any applicable laws, regulations, codes and standards. Further, HMS Industrial Networks will under no circumstances assume liability or responsibility for any problems that may arise as a result from the use of undocumented features or functional side effects found outside the documented scope of the product. The effects caused by any direct or indirect use of such aspects of the product are undefined and may include e.g. compatibility issues and stability issues.

© HMS Industrial Networks S.L.U - All rights reserved
This information is subject to change without notice

Router for the integration of MS/TP devices into BACnet IP enabled monitoring and control systems.

ORDER CODE	LEGACY ORDER CODE
INBACRTR0320000	IBBACRTR0320000

© HMS Industrial Networks S.L.U - All rights reserved
This information is subject to change without notice

INDEX

1 Description 5
1.1 Introduction 5
1.2 Functionality 6
1.3 Router capacity 6
2 Protocol Implementation Conformance Statement 7
2.1 BACnet Standardized Device Profile (Annex L): 7
2.2 Segmentation Capability: 7
2.3 Data Link Layer Options: 7
2.4 Device Address Binding: 8
2.5 Networking Options: 8
2.6 Character Sets Supported 8
2.7 Gateway 8
3 BACnet Interoperability Building Blocks Supported (BIBBs) 9
3.1 Data Sharing BIBBs 9
3.2 Alarm and Event Management BIBBs 9
3.3 Network Management BIBBs 10
3.4 Device Management BIBBs 11
4 Service Types 12
5 Objects 13
5.1 Supported Object Types 13
5.2 Objects and properties 14
5.2.1 INBACRTR0320000 (Device Object Type) 14
5.2.2 BACnet/IP Tx Packets (Analog Input Object Type) 16
5.2.3 BACnet/IP Rx Packets (Analog Input Object Type) 17
5.2.4 BACnet MS/TP Tx Packets (Analog Input Object Type) 18
5.2.5 BACnet MS/TP Rx Packets (Analog Input Object Type) 19
5.2.6 BACnet MS/TP Tx tokens (Analog Input Object Type) 20
5.2.7 BACnet MS/TP Rx tokens (Analog Input Object Type) 21
5.2.8 BACnet MS/TP Tx PFM (Analog Input Object Type) 22
5.2.9 BACnet MS/TP Rx PFM (Analog Input Object Type) 23
5.2.10 BACnet MS/TP CRC Errors (Analog Input Object Type) 24
5.2.11 BACnet/IP Connected (Binary Input Object Type) 25
5.2.12 BACnet/IP Connected (Binary Input Object Type) 26
6 Connections 27
6.1 Powering the device 28
6.2 Connection to BACnet 28
6.2.1 BACnet IP 28
6.2.2 BACnet MSTP 28
6.3 Connection to the configuration tool 28
7 Accessing the DIP switch and push button 29
7.1 Setting the DIP switch 29
7.2 Push button 30
8 External LED indicators 30
9 Set-up process and troubleshooting 31
9.1 Pre-requisites 31
9.2 Intesis MAPS. Configuration & monitoring tool for Intesis BACnet series 31
9.2.1 Introduction 31
9.2.2 Connection 31
9.2.3 Configuration tab 32
9.2.4 Signals 32
9.2.5 Sending the configuration to Intesis 33
9.2.6 Diagnostic 33
9.3 Set-up procedure 35
10 Technical specifications 36
11 Dimensions 37

© HMS Industrial Networks S.L.U - All rights reserved
This information is subject to change without notice

1 Description

1.1 *Introduction*

This document describes how to route messages between BACnet MS/TP and BACnet IP networks using the *Intesis BACnet MS/TP to BACnet IP Router.*

The aim of this is to make accessible data from devices in a BACnet MS/TP network to a BACnet IP network, and viceversa, in a transparent way.

Configuration is carried out using the configuration software Intesis™ MAPS.

This document assumes that the user is familiar with BACnet technologies and their technical terms.

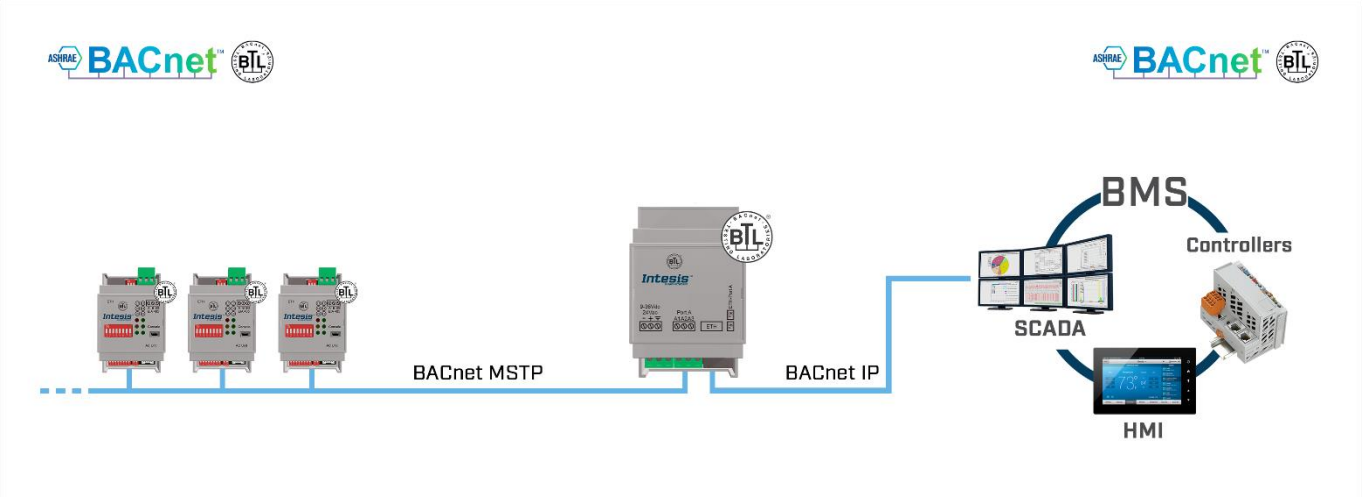

Routing between BACnet MS/TP and BACnet IP networks

© HMS Industrial Networks S.L.U - All rights reserved
This information is subject to change without notice

1.2 *Functionality*

After the start up process, Intesis helps route BACnet communications from a BACnet IP to BACnet MS/TP network, allowing BACnet IP devices to communicate with BACnet MS/TP devices present in another network.

It is not necessary to perform any mapping as the data from one side is shown on the other side in a transparent way.

The router also has diagnostic signals available to check that all the communication from each side is working properly.

1.3 *Router capacity*

Intesis capacity is listed below:

Element	32 devices	Notes
Type of BACnet devices	IP / MSTP	Communication with BACnet IP and MS/TP
Number of BACnet MS/TP Slave devices	Up to 32 full-load MS/TP devices	Number of BACnet MS/TP devices supported

© HMS Industrial Networks S.L.U - All rights reserved
This information is subject to change without notice

2 Protocol Implementation Conformance Statement

BACnet Protocol Implementation Conformance Statement (PICS)

Date: *2019-01-02*
Vendor Name: *HMS Industrial Networks S.L.U*
Product Name: *INBACRTR0320000*
Product Model Number: *INBACRTR0320000*
Application Software Version: *1.0*
Firmware Revision: *1.0.0.0*
BACnet Protocol Revision: *14*

Product Description:

BACnet Router

Abstraction BACnet Router Objects.

2.1 *BACnet Standardized Device Profile (Annex L):*

☐ BACnet Operator Workstation (B-OWS)

☐ BACnet Building Controller (B-BC)

☐ BACnet Advanced Application Controller (B-AAC)

☒ BACnet Application Specific Controller (B-ASC)

☐ BACnet Smart Sensor (B-SS)

☐ BACnet Smart Actuator (B-SA)

Additional BACnet Interoperability Building Blocks Supported (Annex K):
Reference of BIBBs List

2.2 *Segmentation Capability:*

Segmented request supported	☐ No	☒ Yes	Window Size *16*
Segmented responses supported	☐ No	☒ Yes	Window Size *16*

2.3 *Data Link Layer Options:*

☒ BACnet IP, (Annex J)
☐ BACnet IP, (Annex J), Foreign Device
☐ ISO 8802-3, Ethernet (Clause 7)
☐ ANSI/ATA 878.1, 2.5 Mb. ARCNET (Clause 8)
☐ ANSI/ATA 878.1, RS-485 ARCNET (Clause 8), baud rate(s) ____
☒ MS/TP master (Clause 9), baud rate(s): 9600, 19200, 38400, 57600, 76800, 115200
☐ MS/TP slave (Clause 9), baud rate(s):
☐ Point-To-Point, EIA 232 (Clause 10), baud rate(s):
☐ Point-To-Point, modem, (Clause 10), baud rate(s):
☐ LonTalk, (Clause 11), medium: _____
☐ Other:

© HMS Industrial Networks S.L.U - All rights reserved
This information is subject to change without notice

2.4 *Device Address Binding:*

Is static device binding supported? (This is currently necessary for two-way communication with MS/TP slaves and certain other devices.) ☐ Yes ☒ No

2.5 *Networking Options:*

☒ Router, Clause 6 - List all routing configurations, e.g., ARCNET-Ethernet, Ethernet-MS/TP, etc.
☐ Annex H, BACnet Tunneling Router over IP
☒ BACnet/IP Broadcast Management Device (BBMD)
Does the BBMD support registrations by Foreign Devices? ☒ Yes ☐ No

2.6 *Character Sets Supported*

Indicating support for multiple character sets does not imply that they can all be supported simultaneously.

☒ ISO 10646 (UTF-8)	☐ IBM™/Microsoft™ DBCS	☐ ISO 8859-1
☐ ISO 10646 (UCS-2)	☐ ISO 10646 (UCS-4)	☐ JIS X 0208

2.7 *Gateway*

If this product is a communication gateway, describe the types of non-BACnet equipment/network(s) that the gateway supports:

No gateway supports.

© HMS Industrial Networks S.L.U - All rights reserved
This information is subject to change without notice

3 BACnet Interoperability Building Blocks Supported (BIBBs)

3.1 *Data Sharing BIBBs*

BIBB Type		Active	BACnet Service	Initiate	Execute
DS-RP-A	Data Sharing-ReadProperty–A	☐	ReadProperty	☒	☐
DS-RP-B	Data Sharing-ReadProperty–B	☒	ReadProperty	☐	☒
DS-RPM-A	Data Sharing-ReadPropertyMultiple–A	☐	ReadPropertyMultiple	☒	☐
DS-RPM-B	Data Sharing-ReadPropertyMultiple–B	☒	ReadPropertyMultiple	☐	☒
DS-RPC-A	Data Sharing-ReadPropertyConditiona–A	☐	ReadPropertyConditional	☒	☐
DS-RPC-B	Data Sharing-ReadPropertyConditional–B	☐	ReadPropertyConditional	☐	☒
DS-WP-A	Data Sharing-WriteProperty–A	☐	WriteProperty	☒	☐
DS-WP-B	Data Sharing-WriteProperty–B	☒	WriteProperty	☐	☒
DS-WPM-A	Data Sharing-WritePropertyMultiple–A	☐	WritePropertyMultiple	☒	☐
DS-WPM-B	Data Sharing-WritePropertyMultiple–B	☒	WritePropertyMultiple	☐	☒
DS-COV-A	Data Sharing-COV–A	☐	SubscribeCOV	☒	☐
		☐	ConfirmedCOVNotification	☐	☒
		☐	UnconfirmedCOVNotification	☐	☒
DS-COV-B	Data Sharing-COV–B	☒	SubscribeCOV	☐	☒
		☒	ConfirmedCOVNotification	☒	☐
		☒	UnconfirmedCOVNotification	☒	☐
DS-COVP-A	Data Sharing-COVP–A	☐	SubscribeCOVProperty	☒	☐
		☐	ConfirmedCOVNotification	☐	☒
		☐	UnconfirmedCOVNotification	☐	☒
DS-COVP-B	Data Sharing-COVP–B	☐	SubscribeCOVProperty	☐	☒
		☐	ConfirmedCOVNotification	☒	☐
		☐	UnconfirmedCOVNotification	☒	☐
DS-COVU-A	Data Sharing-COV-Unsubscribed–A	☐	UnconfirmedCOVNotification	☐	☒
DS-COVU-B	Data Sharing-COV- Unsubscribed -B	☐	UnconfirmedCOVNotification	☒	☐

3.2 *Alarm and Event Management BIBBs*

BIBB Type		Active	BACnet Service	Initiate	Execute
AE-N-A	Alarm and Event-Notification–A	☐	ConfirmedEventNotification	☐	☒
		☐	UnconfirmedEventNotification	☐	☒
AE-N-I-B	Alarm and Event-Notification Internal–B	☐	ConfirmedEventNotification	☒	☐
		☐	UnconfirmedEventNotification	☒	☐
AE-N-E-B	Alarm and Event-Notification External–B	☐	ConfirmedEventNotification	☒	☐
		☐	UnconfirmedEventNotification	☒	☐
AE-ACK-A	Alarm and Event-ACK–A	☐	AcknowledgeAlarm	☒	☐
AE-ACK-B	Alarm and Event-ACK–B	☐	AcknowledgeAlarm	☐	☒
AE-ASUM-A	Alarm and Event-Alarm Summary–A	☐	GetAlarmSummary	☒	☐
AE-ASUM-B	Alarm and Event-Alarm Summary–B	☐	GetAlarmSummary	☐	☒
AE-ESUM-A	Alarm and Event-Enrollment Summary-A	☐	GetEnrollmentSummary	☒	☐
AE-ESUM-B	Alarm and Event-Enrollment Summary-B	☐	GetEnrollmentSummary	☐	☒
AE-INFO-A	Alarm and Event-Information–A	☐	GetEventInformation	☒	☐
AE-INFO-B	Alarm and Event-Information–B	☐	GetEventInformation	☐	☒
AE-LS-A	Alarm and Event-LifeSafety–A	☐	LifeSafetyOperation	☒	☐
AE-LS-B	Alarm and Event-LifeSafety–B	☐	LifeSafetyOperation	☐	☒

© HMS Industrial Networks S.L.U - All rights reserved
This information is subject to change without notice

3.3 *Network Management BIBBs*

BIBB Type		Active	BACnet Service	Initiate	Execute
NM-CE-A	Network Management - Connection Establishment–A	☐	Establish-Connection-To-Network	☒	☐
		☐	Disconnect-Connection-To-Network	☒	☐
NM-CE-B	Network Management - Connection Establishment– B	☐	Establish-Connection-To-Network	☐	☒
		☐	Disconnect-Connection-To-Network	☐	☒
NM-RC-A	Network Management - Router Configuration–A	☐	Who-Is-Router-To-Network	☒	☐
		☐	I-Am-Router-To-Network	☐	☒
		☐	I-Could-Be-Router-To-Network	☐	☒
		☐	Initialize-Routing-Table	☒	☐
		☐	Initialize-Routing-Table-Ack	☐	☒
NM-RC-B	Network Management - Router Configuration–B	☒	Who-Is-Router-To-Network	☒	☒
		☒	I-Am-Router-To-Network	☒	☒
		☒	Initialize-Routing-Table	☐	☒
		☒	Initialize-Routing-Table-Ack	☒	☐

© HMS Industrial Networks S.L.U - All rights reserved
This information is subject to change without notice

3.4 *Device Management BIBBs*

BIBB Type		Active	BACnet Service	Initiate	Execute
DM-DDB-A	Device Management - Dynamic Device Binding–A	☒	Who-Is	☒	☐
		☒	I-Am	☐	☒
DM-DDB-B	Device Management - Dynamic Device Binding–B	☒	Who-Is	☐	☒
		☒	I-Am	☒	☐
DM-DOB-A	Device Management - Dynamic Object Binding–A	☐	Who-Has	☒	☐
		☐	I-Have	☐	☒
DM-DOB-B	Device Management - Dynamic Object Binding–B	☒	Who-Has	☐	☒
		☒	I-Have	☒	☐
DM-DCC-A	Device Management - DeviceCommunicationControl–A	☐	DeviceCommunicationControl	☒	☐
DM-DCC-B	Device Management - DeviceCommunicationControl–B	☒	DeviceCommunicationControl	☐	☒
DM-PT-A	Device Management - PrivateTransfer–A	☐	ConfirmedPrivateTransfer	☒	☐
		☐	UnconfirmedPrivateTransfer	☒	☐
DM-PT-B	Device Management - PrivateTransfer–B	☐	ConfirmedPrivateTransfer	☐	☒
		☐	UnconfirmedPrivateTransfer	☐	☒
DM-TM-A	Device Management - Text Message–A	☐	ConfirmedTextMessage	☒	☐
		☐	UnconfirmedTextMessage	☒	☐
DM-TM-B	Device Management - Text Message–B	☐	ConfirmedTextMessage	☐	☒
		☐	UnconfirmedTextMessage	☐	☒
DM-TS-A	Device Management - TimeSynchronization–A	☐	TimeSynchronization	☒	☐
DM-TS-B	Device Management - TimeSynchronization–B	☒	TimeSynchronization	☐	☒
DM-UTC-A	Device Management - UTCTimeSynchronization–A	☐	UTCTimeSynchronization	☒	☐
DM-UTC-B	Device Management - UTCTimeSynchronization–B	☐	UTCTimeSynchronization	☐	☒
DM-RD-A	Device Management - ReinitializeDevice–A	☐	ReinitializeDevice	☒	☐
DM-RD-B	Device Management - ReinitializeDevice–B	☒	ReinitializeDevice	☐	☒
DM-BR-A	Device Management - Backup and Restore–A	☐	AtomicReadFile	☒	☐
		☐	AtomicWriteFile	☒	☐
		☐	CreateObject	☒	☐
		☐	ReinitializeDevice	☒	☐
DM-BR-B	Device Management - Backup and Restore–B	☐	AtomicReadFile	☐	☒
		☐	AtomicWriteFile	☐	☒
		☐	ReinitializeDevice	☐	☒
DM-R-A	Device Management - Restart–A	☐	UnconfimedCOVNotification	☐	☒
DM-R-B	Device Management - Restart–B	☐	UnconfimedCOVNotification	☒	☐
DM-LM-A	Device Management - List Manipulation–A	☐	AddListElement	☒	☐
		☐	RemoveListElement	☒	☐
DM-LM-B	Device Management - List Manipulation–B	☐	AddListElement	☐	☒
		☐	RemoveListElement	☐	☒
DM-OCD-A	Device Management - Object Creation and Deletion–A	☐	CreateObject	☒	☐
		☐	DeleteObject	☒	☐
DM-OCD-B	Device Management - Object Creation and Deletion–B	☐	CreateObject	☐	☒
		☐	DeleteObject	☐	☒
DM-VT-A	Device Management - Virtual Terminal–A	☐	VT-Open	☒	☐
		☐	VT-Close	☒	☒
		☐	VT-Data	☒	☒
DM-VT-B	Device Management - Virtual Terminal–B	☐	VT-Open	☐	☒
		☐	VT-Close	☒	☒
		☐	VT-Data	☒	☒

© HMS Industrial Networks S.L.U - All rights reserved
This information is subject to change without notice

4 Service Types

Service type	Service name	Supported	Remarks
Alarm and Event Services	AcknowledgeAlarm	☐	
	ConfirmedCOVNotification	☐	
	ConfirmedEventNotification	☐	
	GetAlarmSummary	☐	
	GetEnrollmentSummary	☐	
	SubscribeCOV	☒	
File Access Services	AtomicReadFile	☐	
	AtomicWriteFile	☐	
Object Access Services	AddListElement	☐	
	RemoveListElement	☐	
	CreateObject	☐	
	DeleteObject	☐	
	ReadProperty	☒	
	ReadPropertyConditional	☐	
	ReadPropertyMultiple	☒	
	ReadRange	☒	
	WriteProperty	☒	
	WritePropertyMultiple	☒	
Remote Device Management Services	DeviceComminicationControl	☒	
	ConfirmedPrivateTransfer	☐	
	ConfirmedTextMessage	☐	
	ReinitializeDevice	☒	
Virtual Terminal Services	VtOpen	☐	
	VtClose	☐	
	VtData	☐	
Security Services	Authenticate	☐	
	RequestKey	☐	
Unconfirmed Services	I-Am	☒	
	I-Have	☐	
	UnconfirmedCOVNotification	☐	
	UnconfirmedEventNotification	☐	
	UnconfirmedPrivateTransfer	☐	
	UnconfirmedTextMessage	☐	
	TimeSynchronization	☒	
	UtcTimeSynchronization	☐	
	Who-Has	☒	
	Who-Is	☒	
	LifeSafetyOperation	☐	
	SubscribeCOVProperty	☐	
	GetEventInformation	☐	

© HMS Industrial Networks S.L.U - All rights reserved
This information is subject to change without notice

5 Objects

5.1 *Supported Object Types*

The objects supported are shown in the table below.

Object Type	ID	Supported	Management Point
Analog-Input	0	☒	
Analog-Output	1	☐	
Analog-Value	2	☐	
Averaging	18	☐	
Binary-Input	3	☒	
Binary-Output	4	☐	
Binary-Value	5	☐	
Calendar	6	☐	
Command	7	☐	
Device	8	☒	
Event-Enrollment	9	☐	
File	10	☐	
Group	11	☐	
Life-Safety-Point	21	☐	
Life-Safety-Zone	22	☐	
Loop	12	☐	
Multistate-Input	13	☐	
Multistate-Output	14	☐	
Multistate-Value	19	☐	
Notification-Class	15	☐	
Program	16	☐	
Schedule	17	☐	
Trend-Log	20	☐	
Trend-Log-Multiple	27	☐	

© HMS Industrial Networks S.L.U - All rights reserved
This information is subject to change without notice

5.2 *Objects and properties*

5.2.1 INBACRTR0320000 (Device Object Type)

Property Identifier	Property Datatype	Value	ASHRAE	IBOX
Object_Identifier	BACnetObjectIdentifier	(Device, 246000)	R	R
Object_Name	CharacterString	"INBACRTR0320000"	R	R
Object_Type	BACnetObjectType	DEVICE (8) (Device Object Type)	R	R
System_Status	BACnetDeviceStatus	OPERATIONAL (0)	R	R
Vendor_Name	CharacterString	"HMS Industrial Networks S.L.U"	R	R
Vendor_Identifier	Unsigned16	246	R	R
Model_Name	CharacterString	"INBACRTR0320000 "	R	R
Firmware_Revision	CharacterString	"1.0.0.0"	R	R
Application_Software_ Version	CharacterString	"1.0.0.0"	R	R
Location	CharacterString	""	O	-
Description	CharacterString	“BACnet Router"	O	-
Protocol_Version	Unsigned	1	R	R
Protocol_Revision	Unsigned	14	R	R
Protocol_Services_ Supported	BACnetServiceSupported	Refer to section 4 [Service Types]	R	R
Protocol_Object_Types_ Supported	BACnetObjectTypes Supported	Refer to section 5.1 [Object Types]	R	R
Object_List	BACnetArray[N] of BACnetObjectIdentifier	BACnetARRAY[N]	R	R
Structured_Object_List	BACnetArray[N] of BACnetObjectIdentifier	-	O	-
Max_APDU_Length_ Accepted	Unsigned	1476 when BACnet IP - 480 when MS/TP	R	R
Segmentation_Supported	BACnetSegmentation	SEGMENTED-BOTH (0)	R	R
Max_Segments_accepted	Unsigned	16	O	R
VT_Classes_Supported	List of BACnetVTClass	-	O	-
Active_VT_Sessions	List of BACnetVTSession	-	O	-
Local_Date	Date	Current date	O	R
Local_Time	Time	Current time	O	R
UTC_Offset	INTEGER	-	O	-
Daylight_Savings_Status	BOOLEAN	-	O	-
APDU_Segment_Timeout	Unsigned	3000	R	R
APDU_Timeout	Unsigned	3000	R	R
Number_of_APDU_ Retries	Unsigned	3	R	R
List_Of_Session_Keys	List of BACnetSessionKey	-	O	-

© HMS Industrial Networks S.L.U - All rights reserved
This information is subject to change without notice

Time_Synchronization_ Recipients	List of BACnetRecipient	-	O	-
Max_Master * **	Unsigned	127	R	W
Max_Info_Frames *	Unsigned	1	O	R
Device_Address_Binding	List of BACnetAddressBinding	NULL (empty)	R	R
Database_Revision	Unsigned	0	R	R
Configuration_Files	BACnetArray[N] of BACnetObjectIdentifier	-	O	-
Last_Restore_Time	BACnetTimeStamp	-	O	-
Backup_Failure_Timeout	Unsigned16	-	O	-
Active_COV_ Subscriptions	List of BACnetCOVSubscription	List of BACnetCOVSubscription	O	R
Slave_Proxy_Enable	BACnetArray[N] of BOOLEAN	-	O	-
Manual_Slave_Address_ Binding	List of BACnetAddressBinding	-	O	-
Auto_Slave_Discovery	BACnetArray[N] of BOOLEAN	-	O	-
Slave_Address_Binding	BACnetAddressBinding	-	O	-
Last_Restart_Reason	BACnetRestartReason	-	O	-
Time_Of_Device_Restart	BACnetTimeStamp	-	O	-
Restart_Notification_ Recipients	List of BACnetRecipient	-	O	-
UTC_Time_ Synchronization_ Recipients	List of BACnetRecipient	-	O	-
Time_Synchronization_ Interval	Unsigned	-	O	-
Align_Intervals	BOOLEAN	-	O	-
Interval_Offset	Unsigned	-	O	-
Profile_Name	CharacterString	-	O	-

* Only available when MSTP is used

** Configurable through the configuration tool.

© HMS Industrial Networks S.L.U - All rights reserved
This information is subject to change without notice

5.2.2 BACnet/IP Tx Packets (Analog Input Object Type)

Property Identifier	Property Datatype	Value	ASHRAE	IBOX
Object_Identifier	BACnetObjectIdentifier	(Analog Input, 0)	R	R
Object_Name	CharacterString	BACnet/IP Tx Packets	R	R
Object_Type	BACnetObjectType	ANALOG_INPUT (0)	R	R
Present_Value	REAL	0 - 4294967295	R	R
Description	CharacterString	-	O	-
Device_Type	CharacterString	-	O	-
Status_Flags	BACnetStatusFlags	{FALSE, FALSE, FALSE, FALSE}	R	R
Event_State	BACnetEventState	STATE_NORMAL (0)	R	R
Reliability	BACnetReliability	NO_FAULT_DETECTED (0)	O	R
Out_Of_Service	BOOLEAN	FALSE	R	R
Update_Interval	Unsigned	-	O	-
Units	BACnetEngineeringUnits	no_units (95)	R	R
Min_Pres_Value	REAL	-	O	-
Max_Pres_Value	REAL	-	O	-
Resolution	REAL	-	O	-
COV_Increment	REAL	1	O	R
Time_Delay	Unsigned	-	O	-
Notification_Class	Unsigned	-	O	-
High_Limit	REAL	-	O	-
Low_Limit	REAL	-	O	-
Deadband	REAL	-	O	-
Limit_Enable	BACnetLimitEnable	-	O	-
Event_Enable	BACnetEventTransitionBits	-	O	-
Acked_Transitions	BACnetEventTransitionBits	-	O	-
Notify_Type	BACnetNotifyType	-	O	-
Event_Time_Stamps	BACnetArray[N] of BACnetTimeStamp	-	O	-
Profile_Name	CharacterString	-	O	-

© HMS Industrial Networks S.L.U - All rights reserved
This information is subject to change without notice

5.2.3 BACnet/IP Rx Packets (Analog Input Object Type)

Property Identifier	Property Datatype	Value	ASHRAE	IBOX
Object_Identifier	BACnetObjectIdentifier	(Analog Input, 1)	R	R
Object_Name	CharacterString	BACnet/IP Rx Packets	R	R
Object_Type	BACnetObjectType	ANALOG_INPUT (0)	R	R
Present_Value	REAL	0 - 4294967295	R	R
Description	CharacterString	-	O	-
Device_Type	CharacterString	-	O	-
Status_Flags	BACnetStatusFlags	{FALSE, FALSE, FALSE, FALSE}	R	R
Event_State	BACnetEventState	STATE_NORMAL (0)	R	R
Reliability	BACnetReliability	NO_FAULT_DETECTED (0)	O	R
Out_Of_Service	BOOLEAN	FALSE	R	R
Update_Interval	Unsigned	-	O	-
Units	BACnetEngineeringUnits	no_units (95)	R	R
Min_Pres_Value	REAL	-	O	-
Max_Pres_Value	REAL	-	O	-
Resolution	REAL	-	O	-
COV_Increment	REAL	1	O	R
Time_Delay	Unsigned	-	O	-
Notification_Class	Unsigned	-	O	-
High_Limit	REAL	-	O	-
Low_Limit	REAL	-	O	-
Deadband	REAL	-	O	-
Limit_Enable	BACnetLimitEnable	-	O	-
Event_Enable	BACnetEventTransitionBits	-	O	-
Acked_Transitions	BACnetEventTransitionBits	-	O	-
Notify_Type	BACnetNotifyType	-	O	-
Event_Time_Stamps	BACnetArray[N] of BACnetTimeStamp	-	O	-
Profile_Name	CharacterString	-	O	-
Event_Time_Stamps	BACnetArray[N] of BACnetTimeStamp	-	O	-
Profile_Name	CharacterString	-	O	-

© HMS Industrial Networks S.L.U - All rights reserved
This information is subject to change without notice

5.2.4 BACnet MS/TP Tx Packets (Analog Input Object Type)

Property Identifier	Property Datatype	Value	ASHRAE	IBOX
Object_Identifier	BACnetObjectIdentifier	(Analog Input, 2)	R	R
Object_Name	CharacterString	BACnet MS/TP Tx Packets	R	R
Object_Type	BACnetObjectType	ANALOG_INPUT (0)	R	R
Present_Value	REAL	0 - 4294967295	R	R
Description	CharacterString	-	O	-
Device_Type	CharacterString	-	O	-
Status_Flags	BACnetStatusFlags	{FALSE, FALSE, FALSE, FALSE}	R	R
Event_State	BACnetEventState	STATE_NORMAL (0)	R	R
Reliability	BACnetReliability	NO_FAULT_DETECTED (0)	O	R
Out_Of_Service	BOOLEAN	FALSE	R	R
Update_Interval	Unsigned	-	O	-
Units	BACnetEngineeringUnits	no_units (95)	R	R
Min_Pres_Value	REAL	-	O	-
Max_Pres_Value	REAL	-	O	-
Resolution	REAL	-	O	-
COV_Increment	REAL	1	O	R
Time_Delay	Unsigned	-	O	-
Notification_Class	Unsigned	-	O	-
High_Limit	REAL	-	O	-
Low_Limit	REAL	-	O	-
Deadband	REAL	-	O	-
Limit_Enable	BACnetLimitEnable	-	O	-
Event_Enable	BACnetEventTransitionBits	-	O	-
Acked_Transitions	BACnetEventTransitionBits	-	O	-
Notify_Type	BACnetNotifyType	-	O	-
Event_Time_Stamps	BACnetArray[N] of BACnetTimeStamp	-	O	-
Profile_Name	CharacterString	-	O	-
Event_Time_Stamps	BACnetArray[N] of BACnetTimeStamp	-	O	-
Profile_Name	CharacterString	-	O	-

© HMS Industrial Networks S.L.U - All rights reserved
This information is subject to change without notice

5.2.5 BACnet MS/TP Rx Packets (Analog Input Object Type)

Property Identifier	Property Datatype	Value	ASHRAE	IBOX
Object_Identifier	BACnetObjectIdentifier	(Analog Input, 3)	R	R
Object_Name	CharacterString	BACnet MS/TP Rx Packets	R	R
Object_Type	BACnetObjectType	ANALOG_INPUT (0)	R	R
Present_Value	REAL	0 - 4294967295	R	R
Description	CharacterString	-	O	-
Device_Type	CharacterString	-	O	-
Status_Flags	BACnetStatusFlags	{FALSE, FALSE, FALSE, FALSE}	R	R
Event_State	BACnetEventState	STATE_NORMAL (0)	R	R
Reliability	BACnetReliability	NO_FAULT_DETECTED (0)	O	R
Out_Of_Service	BOOLEAN	FALSE	R	R
Update_Interval	Unsigned	-	O	-
Units	BACnetEngineeringUnits	no_units (95)	R	R
Min_Pres_Value	REAL	-	O	-
Max_Pres_Value	REAL	-	O	-
Resolution	REAL	-	O	-
COV_Increment	REAL	1	O	R
Time_Delay	Unsigned	-	O	-
Notification_Class	Unsigned	-	O	-
High_Limit	REAL	-	O	-
Low_Limit	REAL	-	O	-
Deadband	REAL	-	O	-
Limit_Enable	BACnetLimitEnable	-	O	-
Event_Enable	BACnetEventTransitionBits	-	O	-
Acked_Transitions	BACnetEventTransitionBits	-	O	-
Notify_Type	BACnetNotifyType	-	O	-
Event_Time_Stamps	BACnetArray[N] of BACnetTimeStamp	-	O	-
Profile_Name	CharacterString	-	O	-
Event_Time_Stamps	BACnetArray[N] of BACnetTimeStamp	-	O	-
Profile_Name	CharacterString	-	O	-

© HMS Industrial Networks S.L.U - All rights reserved
This information is subject to change without notice

5.2.6 BACnet MS/TP Tx tokens (Analog Input Object Type)

Property Identifier	Property Datatype	Value	ASHRAE	IBOX
Object_Identifier	BACnetObjectIdentifier	(Analog Input, 4)	R	R
Object_Name	CharacterString	BACnet MS/TP Tx tokens	R	R
Object_Type	BACnetObjectType	ANALOG_INPUT (0)	R	R
Present_Value	REAL	0 - 4294967295	R	R
Description	CharacterString	-	O	-
Device_Type	CharacterString	-	O	-
Status_Flags	BACnetStatusFlags	{FALSE, FALSE, FALSE, FALSE}	R	R
Event_State	BACnetEventState	STATE_NORMAL (0)	R	R
Reliability	BACnetReliability	NO_FAULT_DETECTED (0)	O	R
Out_Of_Service	BOOLEAN	FALSE	R	R
Update_Interval	Unsigned	-	O	-
Units	BACnetEngineeringUnits	no_units (95)	R	R
Min_Pres_Value	REAL	-	O	-
Max_Pres_Value	REAL	-	O	-
Resolution	REAL	-	O	-
COV_Increment	REAL	1	O	R
Time_Delay	Unsigned	-	O	-
Notification_Class	Unsigned	-	O	-
High_Limit	REAL	-	O	-
Low_Limit	REAL	-	O	-
Deadband	REAL	-	O	-
Limit_Enable	BACnetLimitEnable	-	O	-
Event_Enable	BACnetEventTransitionBits	-	O	-
Acked_Transitions	BACnetEventTransitionBits	-	O	-
Notify_Type	BACnetNotifyType	-	O	-
Event_Time_Stamps	BACnetArray[N] of BACnetTimeStamp	-	O	-
Profile_Name	CharacterString	-	O	-
Event_Time_Stamps	BACnetArray[N] of BACnetTimeStamp	-	O	-
Profile_Name	CharacterString	-	O	-
Profile_Name	CharacterString	-	O	-

© HMS Industrial Networks S.L.U - All rights reserved
This information is subject to change without notice

5.2.7 BACnet MS/TP Rx tokens (Analog Input Object Type)

Property Identifier	Property Datatype	Value	ASHRAE	IBOX
Object_Identifier	BACnetObjectIdentifier	(Analog Input, 5)	R	R
Object_Name	CharacterString	BACnet MS/TP Rx tokens	R	R
Object_Type	BACnetObjectType	ANALOG_INPUT (0)	R	R
Present_Value	REAL	0 - 4294967295	R	R
Description	CharacterString	-	O	-
Device_Type	CharacterString	-	O	-
Status_Flags	BACnetStatusFlags	{FALSE, FALSE, FALSE, FALSE}	R	R
Event_State	BACnetEventState	STATE_NORMAL (0)	R	R
Reliability	BACnetReliability	NO_FAULT_DETECTED (0)	O	R
Out_Of_Service	BOOLEAN	FALSE	R	R
Update_Interval	Unsigned	-	O	-
Units	BACnetEngineeringUnits	no_units (95)	R	R
Min_Pres_Value	REAL	-	O	-
Max_Pres_Value	REAL	-	O	-
Resolution	REAL	-	O	-
COV_Increment	REAL	1	O	R
Time_Delay	Unsigned	-	O	-
Notification_Class	Unsigned	-	O	-
High_Limit	REAL	-	O	-
Low_Limit	REAL	-	O	-
Deadband	REAL	-	O	-
Limit_Enable	BACnetLimitEnable	-	O	-
Event_Enable	BACnetEventTransitionBits	-	O	-
Acked_Transitions	BACnetEventTransitionBits	-	O	-
Notify_Type	BACnetNotifyType	-	O	-
Event_Time_Stamps	BACnetArray[N] of BACnetTimeStamp	-	O	-
Profile_Name	CharacterString	-	O	-
Event_Time_Stamps	BACnetArray[N] of BACnetTimeStamp	-	O	-
Profile_Name	CharacterString	-	O	-

© HMS Industrial Networks S.L.U - All rights reserved
This information is subject to change without notice

5.2.8 BACnet MS/TP Tx PFM (Analog Input Object Type)

Property Identifier	Property Datatype	Value	ASHRAE	IBOX
Object_Identifier	BACnetObjectIdentifier	(Analog Input, 6)	R	R
Object_Name	CharacterString	BACnet MS/TP Tx PFM	R	R
Object_Type	BACnetObjectType	ANALOG_INPUT (0)	R	R
Present_Value	REAL	0 - 4294967295	R	R
Description	CharacterString	-	O	-
Device_Type	CharacterString	-	O	-
Status_Flags	BACnetStatusFlags	{FALSE, FALSE, FALSE, FALSE}	R	R
Event_State	BACnetEventState	STATE_NORMAL (0)	R	R
Reliability	BACnetReliability	NO_FAULT_DETECTED (0)	O	R
Out_Of_Service	BOOLEAN	FALSE	R	R
Update_Interval	Unsigned	-	O	-
Units	BACnetEngineeringUnits	no_units (95)	R	R
Min_Pres_Value	REAL	-	O	-
Max_Pres_Value	REAL	-	O	-
Resolution	REAL	-	O	-
COV_Increment	REAL	1	O	R
Time_Delay	Unsigned	-	O	-
Notification_Class	Unsigned	-	O	-
High_Limit	REAL	-	O	-
Low_Limit	REAL	-	O	-
Deadband	REAL	-	O	-
Limit_Enable	BACnetLimitEnable	-	O	-
Event_Enable	BACnetEventTransitionBits	-	O	-
Acked_Transitions	BACnetEventTransitionBits	-	O	-
Notify_Type	BACnetNotifyType	-	O	-
Event_Time_Stamps	BACnetArray[N] of BACnetTimeStamp	-	O	-
Profile_Name	CharacterString	-	O	-
Event_Time_Stamps	BACnetArray[N] of BACnetTimeStamp	-	O	-
Profile_Name	CharacterString	-	O	-

© HMS Industrial Networks S.L.U - All rights reserved
This information is subject to change without notice

5.2.9 BACnet MS/TP Rx PFM (Analog Input Object Type)

Property Identifier	Property Datatype	Value	ASHRAE	IBOX
Object_Identifier	BACnetObjectIdentifier	(Analog Input, 7)	R	R
Object_Name	CharacterString	BACnet MS/TP Rx PFM	R	R
Object_Type	BACnetObjectType	ANALOG_INPUT (0)	R	R
Present_Value	REAL	0 - 4294967295	R	R
Description	CharacterString	-	O	-
Device_Type	CharacterString	-	O	-
Status_Flags	BACnetStatusFlags	{FALSE, FALSE, FALSE, FALSE}	R	R
Event_State	BACnetEventState	STATE_NORMAL (0)	R	R
Reliability	BACnetReliability	NO_FAULT_DETECTED (0)	O	R
Out_Of_Service	BOOLEAN	FALSE	R	R
Update_Interval	Unsigned	-	O	-
Units	BACnetEngineeringUnits	no_units (95)	R	R
Min_Pres_Value	REAL	-	O	-
Max_Pres_Value	REAL	-	O	-
Resolution	REAL	-	O	-
COV_Increment	REAL	1	O	R
Time_Delay	Unsigned	-	O	-
Notification_Class	Unsigned	-	O	-
High_Limit	REAL	-	O	-
Low_Limit	REAL	-	O	-
Deadband	REAL	-	O	-
Limit_Enable	BACnetLimitEnable	-	O	-
Event_Enable	BACnetEventTransitionBits	-	O	-
Acked_Transitions	BACnetEventTransitionBits	-	O	-
Notify_Type	BACnetNotifyType	-	O	-
Event_Time_Stamps	BACnetArray[N] of BACnetTimeStamp	-	O	-
Profile_Name	CharacterString	-	O	-
Event_Time_Stamps	BACnetArray[N] of BACnetTimeStamp	-	O	-
Profile_Name	CharacterString	-	O	-

© HMS Industrial Networks S.L.U - All rights reserved
This information is subject to change without notice

5.2.10 BACnet MS/TP CRC Errors (Analog Input Object Type)

Property Identifier	Property Datatype	Value	ASHRAE	IBOX
Object_Identifier	BACnetObjectIdentifier	(Analog Input, 8)	R	R
Object_Name	CharacterString	BACnet MS/TP CRC Errors	R	R
Object_Type	BACnetObjectType	ANALOG_INPUT (0)	R	R
Present_Value	REAL	0 - 4294967295	R	R
Description	CharacterString	-	O	-
Device_Type	CharacterString	-	O	-
Status_Flags	BACnetStatusFlags	{FALSE, FALSE, FALSE, FALSE}	R	R
Event_State	BACnetEventState	STATE_NORMAL (0)	R	R
Reliability	BACnetReliability	NO_FAULT_DETECTED (0)	O	R
Out_Of_Service	BOOLEAN	FALSE	R	R
Update_Interval	Unsigned	-	O	-
Units	BACnetEngineeringUnits	no_units (95)	R	R
Min_Pres_Value	REAL	-	O	-
Max_Pres_Value	REAL	-	O	-
Resolution	REAL	-	O	-
COV_Increment	REAL	1	O	R
Time_Delay	Unsigned	-	O	-
Notification_Class	Unsigned	-	O	-
High_Limit	REAL	-	O	-
Low_Limit	REAL	-	O	-
Deadband	REAL	-	O	-
Limit_Enable	BACnetLimitEnable	-	O	-
Event_Enable	BACnetEventTransitionBits	-	O	-
Acked_Transitions	BACnetEventTransitionBits	-	O	-
Notify_Type	BACnetNotifyType	-	O	-
Event_Time_Stamps	BACnetArray[N] of BACnetTimeStamp	-	O	-
Profile_Name	CharacterString	-	O	-
Event_Time_Stamps	BACnetArray[N] of BACnetTimeStamp	-	O	-
Profile_Name	CharacterString	-	O	-

© HMS Industrial Networks S.L.U - All rights reserved
This information is subject to change without notice

5.2.11 BACnet/IP Connected (Binary Input Object Type)

Property Identifier	Property Datatype	Value	ASHRAE	IBOX
Object_Identifier	BACnetObjectIdentifier	(Binary Input, 0)	R	R
Object_Name	CharacterString	BACnet/IP Connected	R	R
Object_Type	BACnetObjectType	BINARY_INPUT (3)	R	R
Present_Value	BACnetBinaryPV	INACTIVE (0) / ACTIVE (1)	R	R
Description	CharacterString	-	O	-
Device_Type	CharacterString	-	O	-
Status_Flags	BACnetStatusFlags	{FALSE, FALSE, FALSE, FALSE}	R	R
Event_State	BACnetEventState	STATE_NORMAL (0)	R	R
Reliability	BACnetReliability	NO_FAULT_DETECTED (0)	O	R
Out_Of_Service	BOOLEAN	FALSE	R	R
Update_Interval	Unsigned	-	O	-
Units	BACnetEngineeringUnits	-	R	-
Min_Pres_Value	REAL	-	O	-
Max_Pres_Value	REAL	-	O	-
Resolution	REAL	-	O	-
COV_Increment	REAL	-	O	-
Time_Delay	Unsigned	-	O	-
Notification_Class	Unsigned	-	O	-
High_Limit	REAL	-	O	-
Low_Limit	REAL	-	O	-
Deadband	REAL	-	O	-
Limit_Enable	BACnetLimitEnable	-	O	-
Event_Enable	BACnetEventTransitionBits	-	O	-
Acked_Transitions	BACnetEventTransitionBits	-	O	-
Notify_Type	BACnetNotifyType	-	O	-
Event_Time_Stamps	BACnetArray[N] of BACnetTimeStamp	-	O	-
Profile_Name	CharacterString	-	O	-
Event_Time_Stamps	BACnetArray[N] of BACnetTimeStamp	-	O	-
Profile_Name	CharacterString	-	O	-

© HMS Industrial Networks S.L.U - All rights reserved
This information is subject to change without notice

5.2.12 BACnet/IP Connected (Binary Input Object Type)

Property Identifier	Property Datatype	Value	ASHRAE	IBOX
Object_Identifier	BACnetObjectIdentifier	(Binary Input, 1)	R	R
Object_Name	CharacterString	BACnet/IP Connected	R	R
Object_Type	BACnetObjectType	BINARY_INPUT (3)	R	R
Present_Value	BACnetBinaryPV	INACTIVE (0) / ACTIVE (1)	R	R
Description	CharacterString	-	O	-
Device_Type	CharacterString	-	O	-
Status_Flags	BACnetStatusFlags	{FALSE, FALSE, FALSE, FALSE}	R	R
Event_State	BACnetEventState	STATE_NORMAL (0)	R	R
Reliability	BACnetReliability	NO_FAULT_DETECTED (0)	O	R
Out_Of_Service	BOOLEAN	FALSE	R	R
Update_Interval	Unsigned	-	O	-
Units	BACnetEngineeringUnits	-	R	-
Min_Pres_Value	REAL	-	O	-
Max_Pres_Value	REAL	-	O	-
Resolution	REAL	-	O	-
COV_Increment	REAL	-	O	-
Time_Delay	Unsigned	-	O	-
Notification_Class	Unsigned	-	O	-
High_Limit	REAL	-	O	-
Low_Limit	REAL	-	O	-
Deadband	REAL	-	O	-
Limit_Enable	BACnetLimitEnable	-	O	-
Event_Enable	BACnetEventTransitionBits	-	O	-
Acked_Transitions	BACnetEventTransitionBits	-	O	-
Notify_Type	BACnetNotifyType	-	O	-
Event_Time_Stamps	BACnetArray[N] of BACnetTimeStamp	-	O	-
Profile_Name	CharacterString	-	O	-
Event_Time_Stamps	BACnetArray[N] of BACnetTimeStamp	-	O	-
Profile_Name	CharacterString	-	O	-

© HMS Industrial Networks S.L.U - All rights reserved
This information is subject to change without notice

6 Connections

Find below information regarding the Intesis connections available.

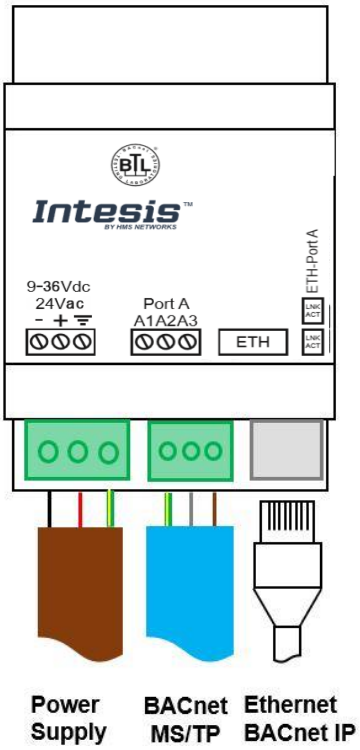

Power Supply
Use a SELV-rated NEC Class 2 or Limited Power Source (LPS) power supply. Respect polarity applied of terminals (+) and (-). Be sure the voltage applied is within the range admitted (check the table below). The power supply can be connected to earth but only through the negative terminal, never through the positive terminal.

Ethernet / BACnet IP
Connect the cable coming from the IP network to the connector ETH of the gateway. Use an Ethernet CAT5 or higher cable. If communicating through the LAN of the building, contact the network administrator and make sure traffic on the port used is allowed through all the LAN path (check the gateway user manual for more information). With factory settings, after powering up the gateway, DHCP will be enabled for 30 seconds. After that time, if no IP is provided by a DHCP server, the default IP 192.168.100.246 will be set.

Port BACnet MS/TP
*Connect the EIA485 bus to connectors **A1**: SGND, **A2**: A-, and **A3**: B+ of gateway's **Port A**. Respect the polarity.*

Note for MS/TP port: *Remember the characteristics of the standard EIA485 bus: maximum distance of 1200 meters (3937 ft), maximum 32 devices connected to the bus, and in each end of the bus it must be a termination resistor of 120 Ω.*

Ensure proper space for all connectors when mounted (see section **¡Error! No se encuentra el origen de la referencia.**).

© HMS Industrial Networks S.L.U - All rights reserved
This information is subject to change without notice

6.1 *Powering the device*

A power supply working with any of the voltage range allowed is needed (check section **¡Error! No se encuentra el origen de la referencia.**). Once connected the RUN led (Figure above) will turn on.

WARNING! In order to avoid earth loops that can damage the gateway and/or any other equipment connected to it, we strongly recommend:

- The use of DC power supplies, floating or with the negative terminal connected to earth. **Never use a DC power supply with the positive terminal connected to earth**.

6.2 *Connection to BACnet*

6.2.1 BACnet IP

Connect the communication cable coming from the network hub or switch to the ETH port (Figure above) of Intesis. The cable to be used shall be a straight Ethernet UTP/FTP CAT5 cable

In case there is no response from the BACnet devices to the frames sent by Intesis, check that they are operative and reachable from the network connection used by Intesis. Check the Intesis Ethernet interface sending *Pings* to its IP address using a PC connected to the same Ethernet network.

Check as well with the network admin that there are no limitations regarding UDP communication or ports blocked.

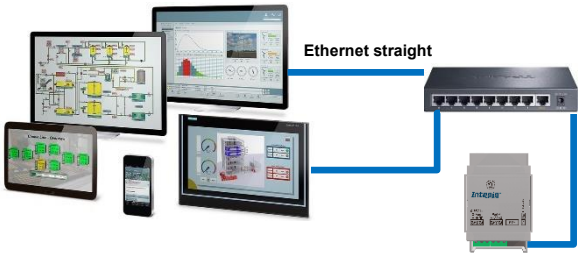

BACnet IP connection using switch/hub and straight cable

BACnet IP connection without switch/hub and crossed cable

6.2.2 BACnet MSTP

Connect the EIA485 bus to connectors A (B+), B (A-) and SG (SNGD) of gateway's Port. Respect the polarity.

Remember the characteristics of the standard EIA485 bus: maximum distance of 1200 meters, maximum 32 devices connected to the bus, and in each end of the bus it must be a termination resistor of 120 Ω.

6.3 *Connection to the configuration tool*

This action allows the user to have access to configuration and monitoring of the device (more information can be found in the configuration tool User Manual). One method to connect to the PC can be used:

- **Ethernet:** Using the Ethernet port of Intesis.

© HMS Industrial Networks S.L.U - All rights reserved
This information is subject to change without notice

7 Accessing the DIP switch and push button

To access the gateway's DIP switch block and push button, you must remove the gateway's main front cover. Use a small flathead screwdriver or a similar tool to proceed.

IMPORTANT! Proceed with caution to avoid damaging the gateway's PCB or housing.

After setting the switches or using the push button, close the housing again, ensuring the front cover is securely fixed in its position.

7.1 *Setting the DIP switch*

The gateway has a DIP switch block dedicated to the EIA-485 port. The function of the DIP switch is to activate or deactivate the polarization (positions 1 and 2) and the termination resistor (position 3) of the port:

Binary value	Switches			Description
b0 .. b2	1	2	3	
0 0 X	OFF	OFF	X	No bus polarization (default value)
1 1 X	ON	ON	X	Bus polarization active
X X 0	X	X	OFF	120 Ω termination resistor inactive (default value) The gateway is not at one end of the EIA-485 bus
X X 1	X	X	ON	120 Ω termination resistor active. The gateway is at one end of the EIA-485 bus

IMPORTANT! The DIP switch configuration will only take effect after rebooting the gateway. To reboot the gateway, disconnect it from power and connect it again.

© HMS Industrial Networks S.L.U - All rights reserved
This information is subject to change without notice

7.2 *Push button*

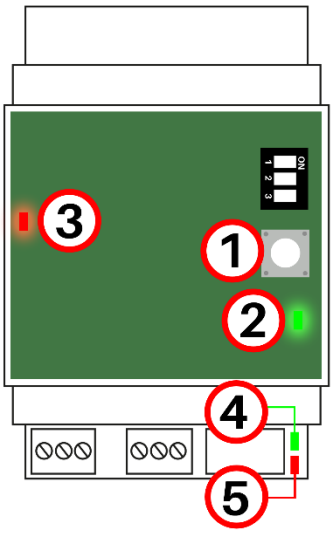

Use the push button (1) to reset the gateway to the factory settings:

1. Disconnect the gateway from power.
2. Press and hold the button.
3. Connect the gateway to power.

- The feedback LED (3) turns on solid red.
- The button LED (2) turns on solid green.
- The external LEDs (4) and (5) start a sequence, turning on and off alternately.

4. After 10 seconds, release the button.

- All LEDs keep performing as described in step 3. Then, they turn off, blink once, and behave as in normal operation: External LEDs (4) and (5) are off, the feedback LED (3) blinks green, and the button LED (2) is solid green.

8 External LED indicators

The gateway's LEDs are placed next to the Ethernet port:

LED 1 (green)

LED 2 (red)

Besides, the Ethernet connector has its own LEDs:

LED 3 (orange)

LED 4 (green)

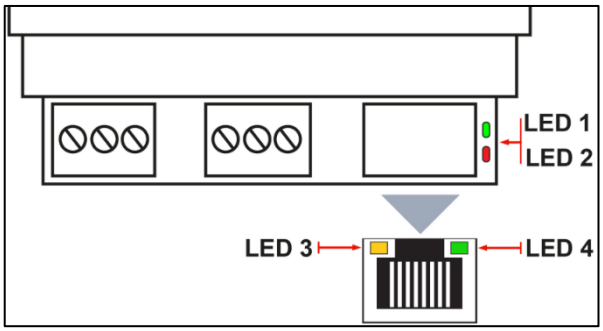

LED	Color	Description
LED 1* (Port A)	Green	**ON**: BACnet MS/TP active link established. Tokens have been successfully exchanged with other MS/TP clients. **Blinking**: BACnet MS/TP activity
LED 2 (Ethernet)	Red	**ON**: BACnet/IP active link established. The ethernet cable is connected and an IP address has been configured. **Blinking**: BACnet/IP activity
LED 3 (RJ45 – Speed)	Orange	**ON**: Connection to a switch, a hub, or a PC at 100 Mbps link speed. **OFF**: Connection not established, or established at 10 Mbps link speed.
LED 4 (RJ45 – Link/Activity)	Green	**ON**: Ethernet connection established **Blinking**: Ethernet activity **OFF**: No Ethernet connection established

* If the gateway is the only client on the bus, this LED will remain off.

© HMS Industrial Networks S.L.U - All rights reserved
This information is subject to change without notice

9 Set-up process and troubleshooting

9.1 *Pre-requisites*

It is necessary to have a BACnet IP client or MSTP device operative and well connected to the corresponding BACnet port of Intesis.

Connectors, connection cables, PC to use the configuration tool and other auxiliary material, if needed, are not supplied by HMS Industrial Networks S.L.U for this standard integration.

Items supplied by HMS Networks for this integration are:

- Intesis gateway.
- Link to download the configuration tool.
- Product documentation.

9.2 *Intesis MAPS. Configuration & monitoring tool for Intesis BACnet series*

9.2.1 Introduction

Intesis MAPS is a Windows® compatible software developed specifically to monitor and configure Intesis BACnet series.

The installation procedure and main functions are explained in the *Intesis MAPS User Manual*. This document can be downloaded from the link indicated in the installation sheet supplied with the Intesis device or in the product website at www.intesis.com

In this section, only the specific case of to BACnet router will be covered.

Please check the Intesis MAPS user manual for specific information about the different parameters and how to configure them.

9.2.2 Connection

To configure the Intesis connection parameters press on the ***Connection*** button in the *menu bar*.

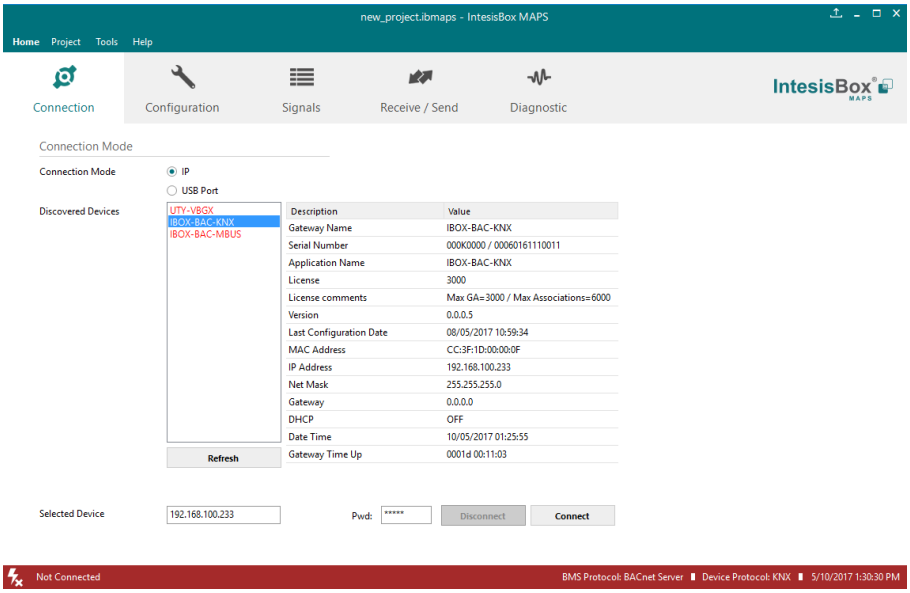

Figure 9.1 MAPS connection

© HMS Industrial Networks S.L.U - All rights reserved
This information is subject to change without notice

9.2.3 Configuration tab

Select the ***Configuration*** tab to configure the connection parameters. Two subsets of information are shown in this window: General (Gateway general parameters) and BACnet Router (BACnet interface configuration).

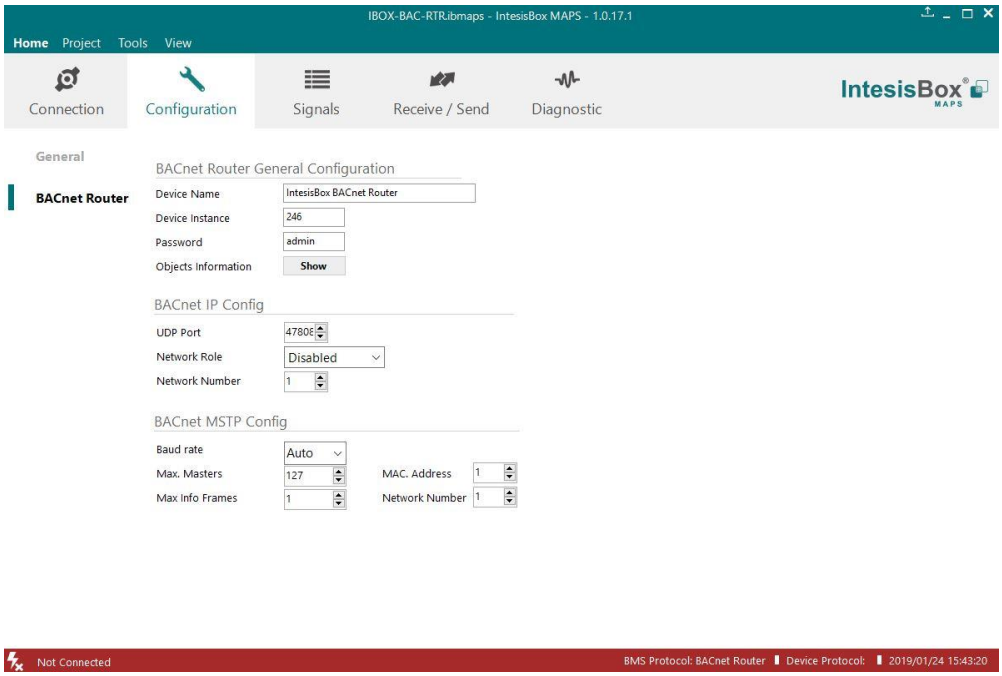

Figure 9.2 Intesis MAPS configuration tab

9.2.4 Signals

All available objects, Object Instances, are listed in the signals tab. More information on each parameter and how to configure it can be found in the Intesis MAPS user manual.

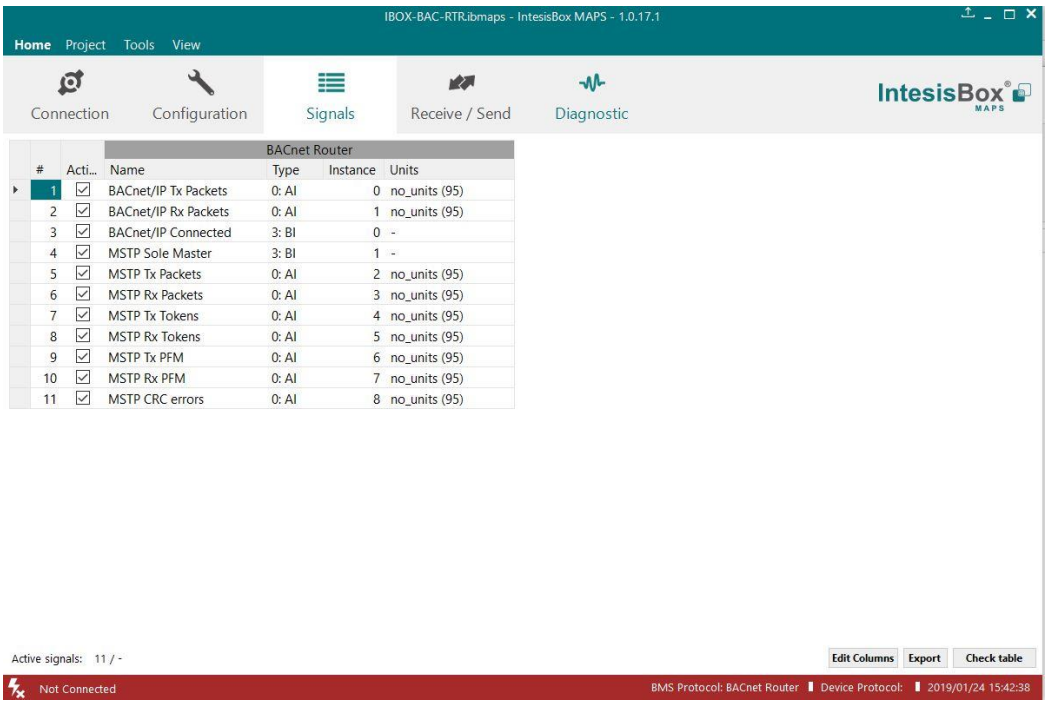

Figure 9.3 Intesis MAPS Signals tab

© HMS Industrial Networks S.L.U - All rights reserved
This information is subject to change without notice

9.2.5 Sending the configuration to Intesis

When the configuration is finished, follow the next steps.

1.- Click on ***Save*** button to save the project to the project folder on your hard disk (more information in Intesis MAPS User Manual).

2.- You will be prompted to generate the configuration file to be sent to the gateway.

a.- If ***Yes*** is selected, the file containing the configuration for the gateway will be generated and saved also into the project folder.

b.- If ***NO*** is selected, remember that the binary file with the project needs to be generated before the Intesis starts to work as expected.

3.- Press the ***Send File*** button to send the binary file to the Intesis device. The process of file transmission can be monitored in the Intesis Communication Console window. Intesis will reboot automatically once the new configuration is loaded.

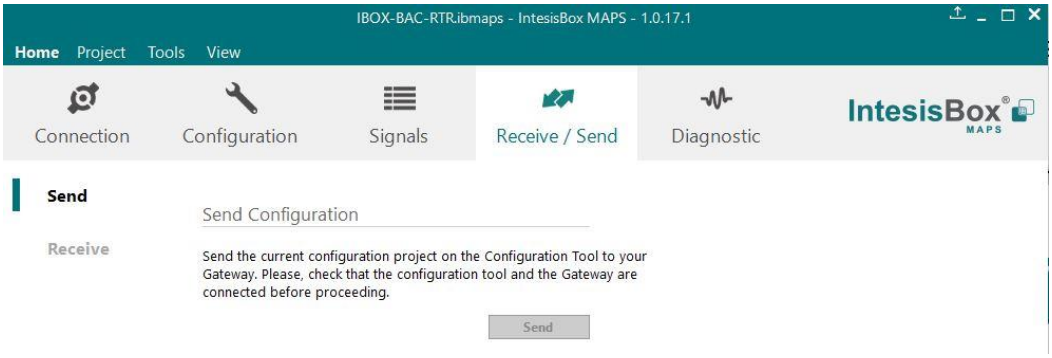

Figure 9.4 Intesis MAPS Receive/Send tab

After any configuration change, do not forget to send the configuration file to the Intesis using button Send File.

9.2.6 Diagnostic

To help integrators in the commissioning tasks and troubleshooting, the Configuration Tool offers some specific tools and viewers.

In order to start using the diagnostic tools, connection with the Gateway is required.

The Diagnostic section is composed by two main parts: Tools and Viewers.

- **Tools**
  Use the tools section to check the current hardware status of the box, log communications into compressed files to be sent to the support, change the Diagnostic panels' view or send commands to the gateway.

- **Viewers**
  In order to check the current status, viewer for the Internal and External protocols are available. It is also available a generic Console viewer for general information about communications and the gateway status and finally a Signals Viewer to simulate the BMS behavior or to check the current values in the system.

© HMS Industrial Networks S.L.U - All rights reserved
This information is subject to change without notice

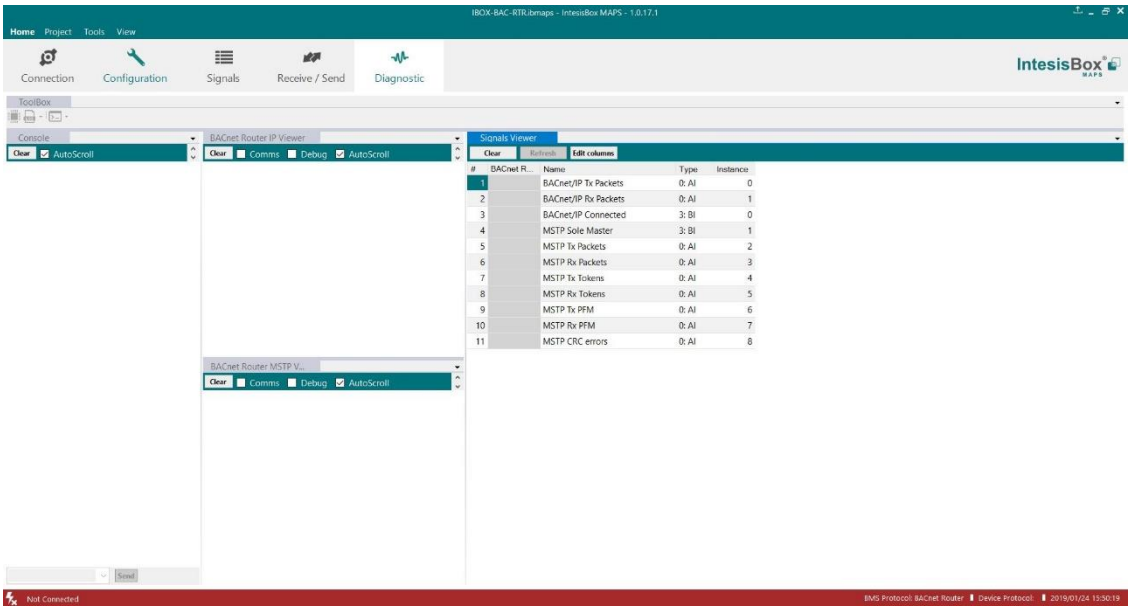

Figure 9.5 Diagnostic

More information about the Diagnostic section can be found in the Configuraion Tool manual.

© HMS Industrial Networks S.L.U - All rights reserved
This information is subject to change without notice

9.3 *Set-up procedure*

1. Install Intesis MAPS on your laptop, use the setup program supplied for this and follow the instructions given by the Installation wizard.

2. Install Intesis in the desired installation site. Installation can be on DIN rail or on a stable not vibrating surface (DIN rail mounted inside a metallic industrial cabinet connected to ground is recommended).

3. If using BACnet IP, connect the communication cable coming from the BACnet IP network to the port marked as Ethernet on Intesis (More details in section 6).

   If using BACnet MSTP, connect the communication cables coming from the BACnet MSTP network to the port marked as BACnet MSTP on Intesis (More details in section 6).

4. Power up Intesis. The supply voltage can be 9 to 24 Vdc. Take care of the polarity of the supply voltage applied.

   WARNING! In order to avoid earth loops that can damage Intesis and/or any other equipment connected to it, we strongly recommend the use of DC power supplies, floating or with the negative terminal connected to earth. **Never use a DC power supply with the positive terminal connected to earth**.

5. If you want to connect using IP, connect the Ethernet cable from the laptop PC to the port marked as ETH of Intesis (More details in section 6).

6. Open Intesis MAPS, create a new project selecting a copy of the one named **INBACRTR0320000**.

7. Modify the configuration as desired, save it and download the configuration file to Intesis as explained in the Intesis MAPS user manual.

8. Visit the Diagnostic section and check that there is communication activity, some TX frames and some other RX frames. This means that the communication with the two BACnet networks is OK. In case there is no communication activity between Intesis and the BACnet devices, check that those are operative.

© HMS Industrial Networks S.L.U - All rights reserved
This information is subject to change without notice

10 Technical specifications

Housing	Plastic, type PC (UL 94 V-0) Net dimensions (dxwxh): 93x53x58 mm Color: Light Grey. RAL 7035 Protection: IP20
Mounting	Wall DIN rail (recommended) EN60715 TH35
Terminal wiring	Per terminal: solid wires or stranded wires (twisted or with ferrule) • One core: 0.2mm^2 .. 2.5mm^2 (24 ..11 AWG) • Two cores: 0.2mm^2 .. 1.5mm^2 (24 ..15 AWG) • Three cores: Not permitted For distances longer than 3.05 meters (10 feet), use Class 2 cables.
Power	1 x Plug-in screw terminal block (3 poles) 9-36 VDC / 24 VAC / 50-60 Hz / 0.140 A / 1.7 W
Ethernet	1 x Ethernet 10/100 Mbps RJ45
Port A	1 x Serial EIA485 (Plug-in screw terminal block 3 poles) • A1: SGND (reference ground or shield) • A2: B (negative) • A3: A (positive)
DIP switch	EIA-485 port polarization and termination: Positions 1 and 2: • On: Polarization active • Off: Polarization inactive (default) Position 3: • On: 120 Ω termination active • Off: 120 Ω termination inactive (default)
Push button	1 x Factory reset
LED indicators	2 x Communication status 2 x Ethernet link/speed
Operational temperature	0°C to +60°C
Operational humidity	5 to 95%, no condensation
Isolation voltage between communication ports	1000VDC

© HMS Industrial Networks S.L.U - All rights reserved
This information is subject to change without notice

11 Dimensions

NET DIMENSIONS (HxWxD):

- Millimeters: 93 x 53 x 58 mm
- Inches: 3.7 x 2.1 x 2.3”

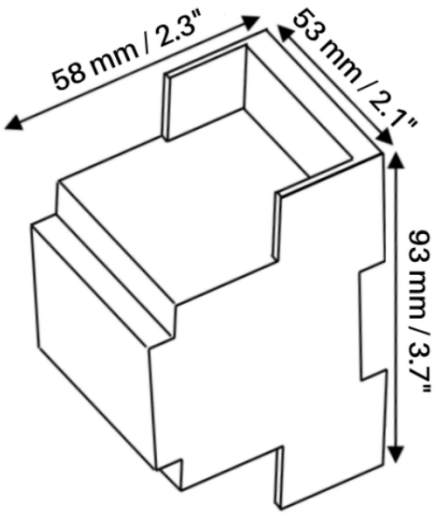

IMPORTANT! Leave enough clear space to wire the gateway easily and for the subsequent manipulation of elements.

© HMS Industrial Networks S.L.U - All rights reserved
This information is subject to change without notice