BACnet MS/TP Slave

For Samsung Air Conditioning

Compatible with NASA commercial air conditioners commercialized by Samsung

USER MANUAL

Issue date: 11/2024 v1.4 ENGLISH

14 rue Edouard Petit
42000 St-Etienne

Tel : +33 477 92 03 56
Email : contact@rg2i.com

www.rg2i.com

Gateway for the integration of Samsung air conditioning units in BACnet enabled monitoring and control systems.

Compatible with Samsung NASA air conditioners

ORDER CODE	LEGACY ORDER CODE
INBACSAM001R100	-

© HMS Industrial Networks S.L.U - All rights reserved
This information is subject to change without notice

Important User Information

Disclaimer

The information in this document is for informational purposes only. Please inform HMS Industrial Networks of any inaccuracies or omissions found in this document. HMS Industrial Networks disclaims any responsibility or liability for any errors that may appear in this document.

HMS Industrial Networks reserves the right to modify its products in line with its policy of continuous product development. The information in this document shall therefore not be construed as a commitment on the part of HMS Industrial Networks and is subject to change without notice. HMS Industrial Networks makes no commitment to update or keep current the information in this document.

The data, examples and illustrations found in this document are included for illustrative purposes and are only intended to help improve understanding of the functionality and handling of the product. In view of the wide range of possible applications of the product, and because of the many variables and requirements associated with any particular implementation, HMS Industrial Networks cannot assume responsibility or liability for actual use based on the data, examples or illustrations included in this document nor for any damages incurred during installation of the product. Those responsible for the use of the product must acquire sufficient knowledge in order to ensure that the product is used correctly in their specific application and that the application meets all performance and safety requirements including any applicable laws, regulations, codes and standards. Further, HMS Industrial Networks will under no circumstances assume liability or responsibility for any problems that may arise as a result from the use of undocumented features or functional side effects found outside the documented scope of the product. The effects caused by any direct or indirect use of such aspects of the product are undefined and may include e.g. compatibility issues and stability issues.

© HMS Industrial Networks S.L.U - All rights reserved
This information is subject to change without notice

INDEX

1 Description 7
1.1 Introduction 7
1.2 Functionalities of the gateway 8
1.3 Capacity of the gateway 8
1.4 Quick Setup 8
2 Connections and switches 9
2.1 Connect to the Remote Controller bus 9
2.2 DIP switches 10
2.3 Connect to BACnet MS/TP 10
2.3.1 How to wire the RS-485 connectors 11
2.3.2 MS/TP MAC address switch configuration 11
2.3.3 Baud rate and AC unit configuration 11
2.4 LED information 11
3 Protocol Implementation Conformance Statement 12
3.1 BACnet Standardized Device Profile (Annex L): 12
3.2 Segmentation Capability: 12
3.3 Data Link Layer Options: 12
3.4 Device Address Binding: 13
3.5 Networking Options: 13
3.6 Character Sets Supported 13
3.7 Gateway 13
4 BACnet Interoperability Building Blocks Supported (BIBBs) 14
4.1 Data Sharing BIBBs 14
4.2 Alarm and Event Management BIBBs 14
4.3 Scheduling BIBBs 15
4.4 Trending BIBBs 15
4.5 Network Management BIBBs 15
4.6 Device Management BIBBs 16
5 Service Types 17
6 Objects 18
6.1 Supported Object Types 18
6.2 Member objects 19
6.2.1 Type: Gateway 19
6.2.2 Type: Indoor Unit 19
6.3 Objects and properties 20
6.3.1 Samsung AC Gateway (Device Object Type) 20
6.3.2 OnOff_status (Binary Input Object Type) 22
6.3.3 OnOff_command (Binary Output Object Type) 23
6.3.4 Mode_status (Multistate Input Object Type) 24

© HMS Industrial Networks S.L.U - All rights reserved
This information is subject to change without notice

6.3.5 Mode_command (Multistate Output Object Type) 25
6.3.6 Setpoint_status (Analog Input Object Type) 26
6.3.7 Setpoint_command (Analog Output Object Type) 27
6.3.8 VirtualTempActive (Binary Input Object Type) 28
6.3.9 FanSpeed_status (Multistate Input Object Type) 29
6.3.10 FanSpeed_command (Multistate Output Object Type) 30
6.3.11 AirDirectionUD_status (Multistate Input Object Type) 31
6.3.12 AirDirectionUD_command (Multistate Output Object Type) 32
6.3.13 AirDirectionLR_status (Multistate Input Object Type) 33
6.3.14 AirDirectionLR_command (Multistate Output Object Type) 34
6.3.15 RoomTemperature_status (Analog Input Object Type) 35
6.3.16 RoomTemperature_command (Analog Output Object Type) 36
6.3.17 ErrorCode (Analog Input Object Type) 37
6.3.18 ErrorCodeM (Multistate Input Object Type) 37
6.3.19 ErrorActive (Binary Input Object Type) 40
6.3.20 ErrorAddress (Analog Input Object Type) 41
6.3.21 OnTimeCounter (Analog Value Object Type) 42
6.3.22 FilterSign (Binary Input Object Type) 43
6.3.23 FilterSignAddress (Analog Input Object Type) 44
6.3.24 FilterReset (Binary Output Object Type) 45
6.3.25 Occupancy (Multistate Value Object Type) 46
6.3.26 OccupiedCoolSetPoint (Analog Value Object Type) 46
6.3.27 OccupiedHeatSetPoint (Analog Value Object Type) 47
6.3.28 UnoccupiedCoolSetPoint (Analog Value Object Type) 48
6.3.29 UnoccupiedHeatSetPoint (Analog Value Object Type) 50
6.3.30 OccupancyContinuousCheck (Binary Value Object Type) 50
6.3.31 UnoccupiedDeadbandAction (Binary Value Object Type) 51
6.3.32 LockRemoteControl (Binary Value Object Type) 52
6.3.33 DIP_SW_S1_status 53
6.3.34 DIP_SW_S2_status 55
6.3.35 SerialNumber (Analog Input Object Type) 56
6.3.36 Number_of_IU_connected (Analog Input Object Type) 57
6.3.37 IU_Address_status_reported (Analog Input Object Type) 58
6.3.38 IU_Pos_status_reported (Analog Value Object Type) 59
6.3.39 WindFree_mode_status (Binary Input Object Type) 60
6.3.40 WindFree_mode_command (Binary Output Object Type) 61
6.3.41 AirClean_mode_command (Binary Output Object Type) 62
6.3.42 AirClean_mode_status (Binary Input Object Type) 63
6.3.43 360_CST_AirFlow_Direction_status (Multistate Input Object Type) 64
6.3.44 360_CST_AirFlow_Direction_command (Multistate Output Object Type) 65
6.3.45 DualSetpoint_active (Binary Value Object Type) 66

© HMS Industrial Networks S.L.U - All rights reserved
This information is subject to change without notice

6.3.46 DualSetpoint_Heat_Temperature_status (Analog Input Object Type) 67
6.3.47 DualSetpoint_Cool_Temperature_status (Analog Input Object Type) 68
6.3.48 DualSetpoint_Heat_Temperature_command (Analog Input Object Type) 69
6.3.49 DualSetpoint_Cool_Temperature_command (Analog Input Object Type) 70
7 Set-up process and troubleshooting 71
7.1 Pre-requisites 71
7.2 Physical checking 71
7.3 Occupancy 71
7.4 Dual Setpoint objects 72
8 AC Unit Types compatibility 73
9 Technical specs 73
9.1 Dimensions 73
10 Binary table for MAC address configuration 74
11 Error codes 75

© HMS Industrial Networks S.L.U - All rights reserved
This information is subject to change without notice

1 Description

1.1 *Introduction*

This document describes the integration of Samsung air conditioning systems into BACnet compatible devices and systems using the Intesis *INBACSAM001R100* gateway.

The aim of this integration is to monitor and control your Samsung air conditioning system, remotely, from your Control Center using any commercial SCADA or monitoring software that includes a BACnet driver or connect it to other BACnet devices to do any automation. To do so, the gateway allows BACnet communication allowing polling or subscription requests (COV).

The gateway makes available the Samsung air conditioning system indoor units through independent BACnet objects.

Abstraction of Samsung air conditioning system properties and functionalities as fixed BACnet Objects. The gateway allows fixed BACnet object IDs mapping. Simple configuration is needed: just select the appropriate communication parameters (MAC address, baud rate…).

This document assumes that the user is familiar with BACnet and Samsung technologies and their technical terms.

© HMS Industrial Networks S.L.U - All rights reserved
This information is subject to change without notice

1.2 *Functionalities of the gateway*

The INMBSSAM001R100 gateway allow a complete and natural integration of ***Samsung NASA*** air conditioners into BACnet MS/TP (EIA-485 / RS-485) networks.

- Reduced dimensions. 93 x 53 x 58 mm / 3.7” x 2.1” x 2.3”
- Quick and easy installation.
  Mountable on DIN rail, wall, or even inside the indoor unit of AC.
- External power supply not required.
- Direct connection to BACnet MS/TP (EIA-485 / RS-485) networks. Up to 127 INBACSAM001R100 gateways can be connected in the same network.
- Direct connection to the RC-bus of the AC unit.
- Configuration through on-board DIP-switches.
- Total Control and Supervision of the AC-Unit.
- Real states of the AC unit's internal variables.
- Allows simultaneous use of the AC’s remote controls and BACnet MS/TP.

1.3 *Capacity of the gateway*

The Intesis gateway can integrate one or more Samsung AC units and its associated elements.

Element	Max.	Notes
Number of indoor units	1*	Number of indoor units that can be controlled through the gateway
Number of Objects	49	Number of Samsung AC signals available as objects into the gateway.

* **NOTE**: Up to 16 units can be connected to the same INBACSAM001R100 gateway. You can control then more than one AC unit, but it will be actuate as a single unit. Different commands to different AC units connected to the same INBACSAM001R100 gateway will not be allowed.

1.4 *Quick Setup*

1. Install the gateway in the desired installation site (DIN rail mounting inside a metallic industrial cabinet connected to ground is recommended).
2. Connect the communication cables. See section 2.1
3. Configure to the Intesis gateway according to section 2.2.
4. Check the BACnet objects list for its integration to your BACnet project. Details in section 6.3.
5. Check if there is communication between BACnet and the AC system.

   ➔ The Intesis gateway is ready to be used in your system. (The green LED L2 will be steady on)

© HMS Industrial Networks S.L.U - All rights reserved
This information is subject to change without notice

2 Connections and switches

2.1 *Connect to the Remote Controller bus*

Disconnect the Samsung system from Main Power Supply

Connect the gateway to terminals F3, F4 at any point in the bus. The Remote Controller bus connects the AC indoor unit to the wired remote controller, it is a two-wire bus connecting terminals F3 and F4. Use RC2 bus port on the gateway's end and respect polarity.

Note that a Remote Controller is optional. If present, the AC unit will be controlled by both the gateway and the RC simultaneously. Set the correct Master/slave set-up.

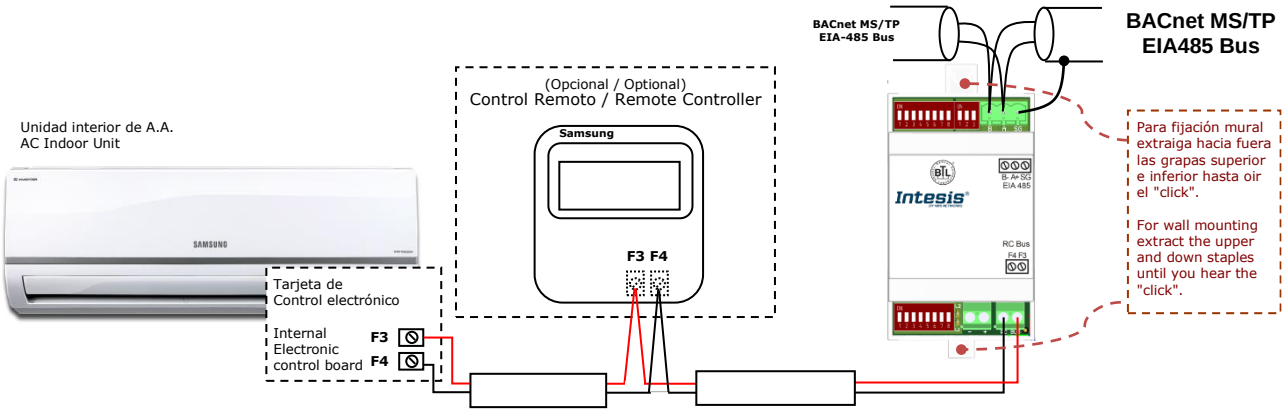

Wiring diagram

© HMS Industrial Networks S.L.U - All rights reserved
This information is subject to change without notice

2.2 *DIP switches*

The INBACSAM001R100 includes the following DIP-Switches blocks (see figure below)

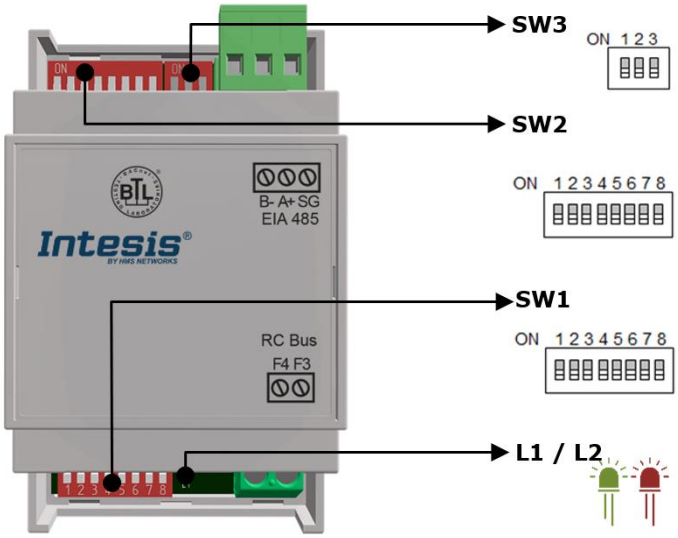

SW3 - Polarization and termination resistor

SW2 - BACnet MS/TP MAC address *

SW1 - BACnet settings

See DIP switches config details below

SW1 – Baud rate and AC unit configuration

SW1								Description
1	2	3	4	5	6	7	8	
↓	x	x	x	x	x	x	x	Not used (Default value)
↑	x	x	x	x	x	x	x	Not used
x	↓	x	x	x	x	x	x	Not used (Default value)
x	↑	x	x	x	x	x	x	Not used
x	x	↓	x	x	x	x	x	Not used (Default value)
x	x	↑	x	x	x	x	x	Not used
x	x	x	↓	x	x	x	x	Not used (Default value)
x	x	x	↑	x	x	x	x	Not used
x	x	x	x	↓	x	x	x	Low Power mode
x	x	x	x	↑	x	x	x	High Performance mode (Default value)
x	x	x	x	x	↓	↓	↓	Autobaudrate (default value)[1]
x	x	x	x	x	↑	↓	↓	9600 bps
x	x	x	x	x	↓	↑	↓	19200 bps
x	x	x	x	x	↑	↑	↓	38400 bps
x	x	x	x	x	↓	↓	↑	57600 bps
x	x	x	x	x	↑	↓	↑	76800 bps
x	x	x	x	x	↓	↑	↑	115200 bps
x	x	x	x	x	↑	↑	↑	Autobaudrate[1]

SW2 – BACnet MS/TP MAC address[2]

SW2								MAC Address / Description
1	2	3	4	5	6	7	8	
↓	↓	↓	↓	↓	↓	↓	x	0 (Default value)
↑	↓	↓	↓	↓	↓	↓	x	1
↓	↑	↓	↓	↓	↓	↓	x	2
↑	↑	↓	↓	↓	↓	↓	x	3
… (binary enumeration)							x	Full table in section 10
↓	↑	↑	↑	↑	↑	↑	x	126
↑	↑	↑	↑	↑	↑	↑	x	127
x	x	x	x	x	x	x	↓	BACnet Temp. values in ºC (Default)
x	x	x	x	x	x	x	↑	BACnet Temp. values in ºF

SW3 – BACnet settings

SW2			MAC Address / Description
1	2	3	
↓	x	x	EIA-485 bus without termination resistor (Default value).
↑	x	x	Internal termination resistor of 120Ω connected to EIA-485 bus.
x	↓	↓	No BUS polarization (Default value).
x	↑	↑	BUS polarization active.

⚠ ***Important***: Switch changes take effect after a device power cycle

2.3 *Connect to BACnet MS/TP*

Connect the EIA485 bus wires to the INBACSAM001R100 plug-in terminal block (EIA485/RS485); observe polarity on this connection (A+ and B-). For BACnet MS/TP bus, use three-conductor shielded cable. Connect the metallic shields for all cables connected to the gateway EIA-485 port. Connect shield to ground only on one end

Connect the ground signal to the plug-in terminal block (SG).

Observe the maximum distance of 1,200 m / 3937 ft. for the bus, no loop or star topologies are allowed for EIA485/RS485 bus.

[1] If Auto-baudrate is selected, the Intesis-Interface will look for another BACnet MS/TP device with a fixed baudrate to match this value. Once detected, the baudrate will not be modified until a device reset is produced.

[2] The MAC address selected may affect on the Device Instance. Check the manual for more information.

© HMS Industrial Networks S.L.U - All rights reserved
This information is subject to change without notice

EIA-485 bus. Termination resistors and Fail-Safe Biasing mechanism

EIA-485 bus requires a 120Ω terminator resistor at each end of the bus to avoid signal reflections.

In order to prevent fail status detections by the receivers, which are *"listening"* to the bus, when all the transmitters' outputs are in three-state (high impedance), a fail-safe biasing mechanism is required. This mechanism provides a safe status (a correct voltage level) in the bus when all the transmitters' outputs are in three-state.

The INBACSAM001R100 gateway includes an on-board terminator resistor of 120Ω that can be connected to the EIA-485 bus by using DIP-switch **SW3**.

Some BACnet MS/TP EIA-485 Master devices can provide also internal 120Ω terminator resistor and/or fail-safe biasing. Check the technical documentation of the Master device connected to the EIA-485 network in each case.

Please, check configuration as well on **SW1** and **SW2** before connecting to BACnet MS/TP.

2.3.1 How to wire the RS-485 connectors

RS-485 terminals on Intesis AC-Gateways are labeled A+, B- and SG, according to a common convention.

A+: Non-inverted (low for logic 0 and high for logic 1)
B-: Inverted (high for logic 0 and low for logic 1)
SG: Signal Ground

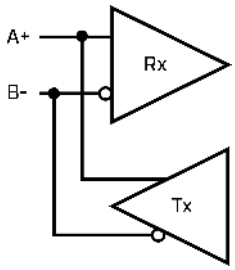

Other RS-485 products in the market may use "+" and "–" symbols or variants such as "D+" and "D-". Sometimes the polarity of the letters may be reversed, A-, B+. The Signal Ground SG wire is sometimes called GND (ground) or C (Common).
In situations where the polarity labeling is confusing, a good practice is to ignore the letters and connect – to – and + to +. If all the communications setting, such as baud rate and address, are configured correctly but the device is still not communicating, try change polarity swapping the two data wires. Reversing the wires will not damage the device.

When the connection is working, the gateway LED L1 will flash green. Refer to the LED-status section for additional information.

2.3.2 MS/TP MAC address switch configuration

MAC address can be configured using DIP-switch block **SW2**. The MAC address may affect on the Device Instance. If the "Auto Device Instance" is used, keep in mind that the Device Instance will be built using the "Device Instance Base" + the address configured in SW2, bits 1 to 7.

2.3.3 Baud rate and AC unit configuration

Select the right baudrate for BACnet MS/TP communication using DIP-switch block **SW1**.

2.4 *LED information*

LED	Behaviour	Description
L1 (RED)	ON steady	Communication error with AC unit
	Blinking	AC error
	OFF	Normal functioning
L2 (GREEN)	ON steady	BACnet MS/TP Link
	Blinking	Activity on the MS/TP bus

© HMS Industrial Networks S.L.U - All rights reserved
This information is subject to change without notice

3 Protocol Implementation Conformance Statement

BACnet Protocol Implementation Conformance Statement (PICS)

Date: *2021-09-21*
Vendor Name: *HMS Industrial Networks AB (BU Intesis)*
Product Name: *Intesis Air Conditioning Interface*
Product Model Number: *Samsung NASA to BACnet MSTP*
Application Software Version: *1.0.0.2*
Firmware Revision: *1.0.1.0*
BACnet Protocol Revision: *12*

Product Description:

Samsung air conditioning system – BACnet MS/TP Gateway

Abstraction of Samsung air conditioning system properties and functionalities as BACnet Objects.

3.1 *BACnet Standardized Device Profile (Annex L):*

☐ BACnet Operator Workstation (B-OWS)

☐ BACnet Building Controller (B-BC)

☐ BACnet Advanced Application Controller (B-AAC)

☒ BACnet Application Specific Controller (B-ASC)

☐ BACnet Smart Sensor (B-SS)

☐ BACnet Smart Actuator (B-SA)

Additional BACnet Interoperability Building Blocks Supported (Annex K):
Reference of BIBBs List

3.2 *Segmentation Capability:*

Segmented request supported	☐ No	☒ Yes	Window Size *16*
Segmented responses supported	☐ No	☒ Yes	Window Size *16*

3.3 *Data Link Layer Options:*

☐ BACnet IP, (Annex J)
☐ BACnet IP, (Annex J), Foreign Device
☐ ISO 8802-3, Ethernet (Clause 7)
☐ ANSI/ATA 878.1, 2.5 Mb. ARCNET (Clause 8)
☐ ANSI/ATA 878.1, RS-485 ARCNET (Clause 8), baud rate(s) ____
☒ MS/TP master (Clause 9), baud rate(s): 9600, 19200, 38400, 76800
☐ MS/TP slave (Clause 9), baud rate(s):
☐ Point-To-Point, EIA 232 (Clause 10), baud rate(s):
☐ Point-To-Point, modem, (Clause 10), baud rate(s):
☐ LonTalk, (Clause 11), medium: _____
☐ Other:

© HMS Industrial Networks S.L.U - All rights reserved
This information is subject to change without notice

3.4 *Device Address Binding:*

Is static device binding supported? (This is currently necessary for two-way communication with MS/TP slaves and certain other devices.) ☐ Yes ☒ No

3.5 *Networking Options:*

☐ Router, Clause 6 - List all routing configurations, e.g., ARCNET-Ethernet, Ethernet-MS/TP, etc.
☐ Annex H, BACnet Tunneling Router over IP
☐ BACnet/IP Broadcast Management Device (BBMD)
Does the BBMD support registrations by Foreign Devices? ☐ Yes ☐ No

3.6 *Character Sets Supported*

Indicating support for multiple character sets does not imply that they can all be supported simultaneously.

☒ ANSI X3.4
☐ IBM™/Microsoft™ DBCS
☐ JIS C 6226
☐ ISO 10646 (UCS-4)
☐ ISO 10646 (UCS-2)
☐ ISO 8859-1

3.7 *Gateway*

If this product is a communication gateway, describe the types of non-BACnet equipment/network(s) that the gateway supports:

Samsung NASA VRF air conditioners

© HMS Industrial Networks S.L.U - All rights reserved
This information is subject to change without notice

4 BACnet Interoperability Building Blocks Supported (BIBBs)

4.1 *Data Sharing BIBBs*

BIBB Type		Active	BACnet Service	Initiate	Execute
DS-RP-A	Data Sharing-ReadProperty–A	☐	ReadProperty	☒	☐
DS-RP-B	Data Sharing-ReadProperty–B	☒	ReadProperty	☐	☒
DS-RPM-A	Data Sharing-ReadPropertyMultiple–A	☐	ReadPropertyMultiple	☒	☐
DS-RPM-B	Data Sharing-ReadPropertyMultiple–B	☒	ReadPropertyMultiple	☐	☒
DS-RPC-A	Data Sharing-ReadPropertyConditiona–A	☐	ReadPropertyConditional	☒	☐
DS-RPC-B	Data Sharing-ReadPropertyConditional–B	☐	ReadPropertyConditional	☐	☒
DS-WP-A	Data Sharing-WriteProperty–A	☐	WriteProperty	☒	☐
DS-WP-B	Data Sharing-WriteProperty–B	☒	WriteProperty	☐	☒
DS-WPM-A	Data Sharing-WritePropertyMultiple–A	☐	WritePropertyMultiple	☒	☐
DS-WPM-B	Data Sharing-WritePropertyMultiple–B	☒	WritePropertyMultiple	☐	☒
DS-COV-A	Data Sharing-COV–A	☐	SubscribeCOV	☒	☐
		☐	ConfirmedCOVNotification	☐	☒
		☐	UnconfirmedCOVNotification	☐	☒
DS-COV-B	Data Sharing-COV–B	☒	SubscribeCOV	☐	☒
		☒	ConfirmedCOVNotification	☒	☐
		☒	UnconfirmedCOVNotification	☒	☐
DS-COVP-A	Data Sharing-COVP–A	☐	SubscribeCOV	☒	☐
		☐	ConfirmedCOVNotification	☐	☒
		☐	UnconfirmedCOVNotification	☐	☒
DS-COVP-B	Data Sharing-COVP–B	☐	SubscribeCOV	☐	☒
		☐	ConfirmedCOVNotification	☒	☐
		☐	UnconfirmedCOVNotification	☒	☐
DS-COVU-A	Data Sharing-COV-Unsolicited–A	☐	UncofirmedCOVNotification	☐	☒
DS-COVU-B	Data Sharing-COV-Unsolicited-B	☐	UncofirmedCOVNotification	☒	☐

4.2 *Alarm and Event Management BIBBs*

BIBB Type		Active	BACnet Service	Initiate	Execute
AE-N-A	Alarm and Event-Notification–A	☐	ConfirmedEventNotification	☐	☒
		☐	UnconfirmedEventNotification	☐	☒
AE-N-I-B	Alarm and Event-Notification Internal–B	☐	ConfirmedEventNotification	☒	☐
		☐	UnconfirmedEventNotification	☒	☐
AE-N-E-B	Alarm and Event-Notification External–B	☐	ConfirmedEventNotification	☒	☐
		☐	UnconfirmedEventNotification	☒	☐
AE-ACK-A	Alarm and Event-ACK–A	☐	AcknowledgeAlarm	☒	☐
AE-ACK-B	Alarm and Event-ACK–B	☐	AcknowledgeAlarm	☐	☒
AE-ASUM-A	Alarm and Event-Summary–A	☐	GetAlarmSummary	☒	☐
AE-ASUM-B	Alarm and Event-Summary–B	☐	GetAlarmSummary	☐	☒
AE-ESUM-A	Event-Summary–A	☐	GetEnrollmentSummary	☒	☐
AE-ESUM-B	Event-Summary–B	☐	GetEnrollmentSummary	☐	☒
AE-INFO-A	Alarm and Event-Information–A	☐	GetEventInformation	☒	☐
AE-INFO-B	Alarm and Event-Information–B	☐	GetEventInformation	☐	☒
AE-LS-A	Alarm and Event-LifeSafety–A	☐	LifeSafetyOperation	☒	☐
AE-LS-B	Alarm and Event-LifeSafety–B	☐	LifeSafetyOperation	☐	☒

© HMS Industrial Networks S.L.U - All rights reserved
This information is subject to change without notice

4.3 *Scheduling BIBBs*

BIBB Type		Active	BACnet Service	Initiate	Execute
SCHED-A	Scheduling–A *(must support DS-RP-A and DS-WP-A)*	☐			
		☐			
SCHED-I-B	Scheduling-Internal–B *(shall support DS-RP-B and DS-WP-B)* *(shall also support ether DM-TS-B or DS-UTC-B)*	☐			
		☐			
SCHED-E-B	Scheduling-External–B *(shall support SCHED-I-B and DS-WP-A)*	☐			
		☐			
T-VMT-A	Trending - Viewing and Modifying Trends–A	☐	ReadRange	☐	☒
T-VMT-I-B	Trending - Viewing and Modifying Trends Inernal–B	☐	ReadRange	☐	☒
T-VMT-E-B	Trending - Viewing and Modifying Trends External–B	☐	ReadRange	☐	☒
T-ATR-A	Trending - Automated Trend Retrieval–A	☐	ConfirmedEventNotification	☐	☒
		☐	ReadRange	☒	☐
T-ATR-B	Trending - Automated Trend Retrieval–B	☐	ConfirmedEventNotification	☒	☐
		☐	ReadRange	☐	☒

4.4 *Trending BIBBs*

BIBB Type		Active	BACnet Service	Initiate	Execute
T-VMT-A	Trending - Viewing and Modifying Trends–A	☐	ReadRange	☒	☐
T-VMT-I-B	Trending - Viewing and Modifying Trends Inernal–B	☐	ReadRange	☐	☒
T-VMT-E-B	Trending - Viewing and Modifying Trends External–B	☐	ReadRange	☐	☒
T-ATR-A	Trending - Automated Trend Retrieval–A	☐	ConfirmedEventNotification	☐	☒
		☐	ReadRange	☒	☐
T-ATR-B	Trending - Automated Trend Retrieval–B	☐	ConfirmedEventNotification	☒	☐
		☐	ReadRange	☐	☒

4.5 *Network Management BIBBs*

BIBB Type		Active	BACnet Service	Initiate	Execute
NM-CE-A	Network Management - Connection Establishment–A	☐	Establish-Connection-To-Network	☒	☐
		☐	Disconnect-Connection-To-Network	☒	☐
NM-CE-B	Network Management - Connection Establishment– B	☐	Establish-Connection-To-Network	☐	☒
		☐	Disconnect-Connection-To-Network	☐	☒
NM-RC-A	Network Management - Router Configuration–A	☐	Who-Is-Router-To-Network	☒	☐
		☐	I-Am-Router-To-Network	☐	☒
		☐	I-Could-Be-Router-To-Network	☐	☒
		☐	Initialize-Routing-Table	☒	☐
		☐	Initialize-Routing-Table-Ack	☐	☒
NM-RC-B	Network Management - Router Configuration–B	☐	Who-Is-Router-To-Network	☒	☒
		☐	I-Am-Router-To-Network	☒	☒
		☐	Initialize-Routing-Table	☐	☒
		☐	Initialize-Routing-Table-Ack	☒	☐

© HMS Industrial Networks S.L.U - All rights reserved
This information is subject to change without notice

4.6 *Device Management BIBBs*

BIBB Type		Active	BACnet Service	Initiate	Execute
DM-DDB-A	Device Management - Dynamic Device Binding–A	☐	Who-Is	☒	☐
		☐	I-Am	☐	☒
DM-DDB-B	Device Management - Dynamic Device Binding–B	☒	Who-Is	☐	☒
		☒	I-Am	☒	☐
DM-DOB-A	Device Management - Dynamic Object Binding–A	☐	Who-Has	☒	☐
		☐	I-Have	☐	☒
DM-DOB-B	Device Management - Dynamic Object Binding–B	☒	Who-Has	☐	☒
		☒	I-Have	☒	☐
DM-DCC-A	Device Management - DeviceCommunicationControl–A	☐	DeviceCommunicationControl	☒	☐
DM-DCC-B	Device Management - DeviceCommunicationControl–B	☒	DeviceCommunicationControl	☐	☒
DM-PT-A	Device Management - PrivateTransfer–A	☐	ConfirmedPrivateTransfer	☒	☐
		☐	UnconfirmedPrivateTransfer	☒	☐
DM-PT-B	Device Management - PrivateTransfer–B	☐	ConfirmedPrivateTransfer	☐	☒
		☐	UnconfirmedPrivateTransfer	☐	☒
DM-TM-A	Device Management - Text Message–A	☐	ConfirmedTextMessage	☒	☐
		☐	UnconfirmedTextMessage	☒	☐
DM-TM-B	Device Management - Text Message–B	☐	ConfirmedTextMessage	☐	☒
		☐	UnconfirmedTextMessage	☐	☒
DM-TS-A	Device Management - TimeSynchronization–A	☐	TimeSynchronization	☒	☐
DM-TS-B	Device Management - TimeSynchronization–B	☐	TimeSynchronization	☐	☒
DM-UTC-A	Device Management - UTCTimeSynchronization–A	☐	UTCTimeSynchronization	☒	☐
DM-UTC-B	Device Management - UTCTimeSynchronization–B	☐	UTCTimeSynchronization	☐	☒
DM-RD-A	Device Management - ReinitializeDevice–A	☐	ReinitializeDevice	☒	☐
DM-RD-B	Device Management - ReinitializeDevice–B	☒	ReinitializeDevice	☐	☒
DM-BR-A	Device Management - Backup and Restore–A	☐	AtomicReadFile	☒	☐
		☐	AtomicWriteFile	☒	☐
		☐	CreateObject	☒	☐
		☐	ReinitializeDevice	☒	☐
DM-BR-B	Device Management - Backup and Restore–B	☐	AtomicReadFile	☐	☒
		☐	AtomicWriteFile	☐	☒
		☐	ReinitializeDevice	☐	☒
DM-R-A	Device Management - Restart–A	☐	UnconfimedCOVNotification	☐	☒
DM-R-B	Device Management - Restart–B	☐	UnconfimedCOVNotification	☒	☐
DM-LM-A	Device Management - List Manipulation–A	☐	AddListElement	☒	☐
		☐	RemoveListElement	☒	☐
DM-LM-B	Device Management - List Manipulation–B	☐	AddListElement	☐	☒
		☐	RemoveListElement	☐	☒
DM-OCD-A	Device Management - Object Creation and Deletion–A	☐	CreateObject	☒	☐
		☐	DeleteObject	☒	☐
DM-OCD-B	Device Management - Object Creation and Deletion–B	☐	CreateObject	☐	☒
		☐	DeleteObject	☐	☒
DM-VT-A	Device Management - Virtual Terminal–A	☐	VT-Open	☒	☐
		☐	VT-Close	☒	☒
		☐	VT-Data	☒	☒
DM-VT-B	Device Management - Virtual Terminal–B	☐	VT-Open	☐	☒
		☐	VT-Close	☒	☒
		☐	VT-Data	☒	☒

© HMS Industrial Networks S.L.U - All rights reserved
This information is subject to change without notice

5 Service Types

Service type	Service name	Supported	Remarks
Alarm and Event Services	AcknowledgeAlarm	☐	
	ConfirmedCOVNotification	☐	
	ConfirmedEventNotification	☐	
	GetAlarmSummary	☐	
	GetEnrollmentSummary	☐	
	SubscribeCOV	☒	
File Access Services	AtomicReadFile	☐	
	AtomicWriteFile	☐	
Object Access Services	AddListElement	☐	
	RemoveListElement	☐	
	CreateObject	☐	
	DeleteObject	☐	
	ReadProperty	☒	
	ReadPropertyConditional	☐	
	ReadPropertyMultiple	☒	
	ReadRange	☐	
	WriteProperty	☒	
	WritePropertyMultiple	☒	
Remote Device Management Services	DeviceComminicationControl	☐	
	ConfirmedPrivateTransfer	☐	
	ConfirmedTextMessage	☐	
	ReinitializeDevice	☒	
Virtual Terminal Services	VtOpen	☐	
	VtClose	☐	
	VtData	☐	
Security Services	Authenticate	☐	
	RequestKey	☐	
Unconfirmed Services	I-Am	☒	
	I-Have	☒	
	UnconfirmedCOVNotification	☐	
	UnconfirmedEventNotification	☐	
	UnconfirmedPrivateTransfer	☐	
	UnconfirmedTextMessage	☐	
	TimeSynchronization	☐	
	UtcTimeSynchronization	☐	
	Who-Has	☒	
	Who-Is	☒	
	LifeSafetyOperation	☐	
	SubscribeCOVProperty	☒	
	GetEventInformation	☐	

© HMS Industrial Networks S.L.U - All rights reserved
This information is subject to change without notice

6 Objects

6.1 *Supported Object Types*

The objects supported are shown in the table below.

Object Type	ID	Supported	Management Point
Analog-Input	0	☒	SetPoint_status UserSetPoint_status RoomTemperature_status ErrorCode ErrorAddress FIlterSignAddress DIP_SW_S1_status DIP_SW_S2_status SerialNumber Number_of_IU_connected IU_Address_status_reported DualSetpoint_Heat_Temperature_status DualSetpoint_Cool_Temperature_status
Analog-Output	1	☒	SetPoint_command RoomTemperature_command DualSetpoint_Heat_Temperature_command DualSetpoint_Cool_Temperature_command
Analog-Value	2	☒	OnTimeCounter OccupiedCoolSetPoint OccupiedHeatSetPoint UnoccupiedCoolSetPoint UnoccupiedHeatSetPoint IU_Pos_status_reported
Binary-Input	3	☒	OnOff_status VirtualTempActive ErrorActive FilterSign WindFree_mode_status AirClean_mode_status
Binary-Output	4	☒	OnOff_command FilterReset WindFree_mode_command AirClean_mode_command
Binary-Value	5	☒	OccupancyContinuousCheck UnoccupiedDeadbandAction LockRemoteControl DualSetpoint_active
Calendar	6	☐	
Command	7	☐	
Device	8	☒	INBACSAM001R100
Event-Enrollment	9	☐	
File	10	☐	
Group	11	☐	
Loop	12	☐	
Multistate-Input	13	☒	Mode_status FanSpeed_status AirDirectionUD_status AirDirectionLR_status ErrorCodeM 360_CST_AirFlow_Direction_status
Multistate-Output	14	☒	Mode_command FanSpeed_command AirDirectionUD_command AirDirectionLR_command 360_CST_AirFlow_Direction_command
Notification-Class	15	☐	
Program	16	☐	
Schedule	17	☐	

© HMS Industrial Networks S.L.U - All rights reserved
This information is subject to change without notice

Averaging	18	☐	
Multistate-Value	19	☒	Occupancy
Trend-Log	20	☐	
Life-Safety-Point	21	☐	
Life-Safety-Zone	22	☐	

6.2 *Member objects*

6.2.1 Type: Gateway

Object-name	Description	Object-type	Object-instance
INBACSAM001R100	Samsung NASA VRF Interface	Device	246000*

6.2.2 Type: Indoor Unit

Object-name	Description	Object-type	Object-instance
OnOff_status		BI	0
OnOff_command		BO	0
Mode_status		MI	0
Mode_command		MO	0
SetPoint_status		AI	0
UserSetPoint_status		AI	17
SetPoint_command		AO	0
VirtualTempActive		BI	14
FanSpeed_status		MI	1
FanSpeed_command		MO	1
AirDirectionUD_status		MI	2
AirDirectionUD_command		MO	2
AirDirectionLR_status		MI	3
AirDirectionLR_command		MO	3
RoomTemperature_status		AI	1
RoomTemperature_command		AO	1
ErrorCode		AI	2
ErrorCodeM		MI	4
ErrorActive		BI	1
ErrorAddress		AI	4
OnTimeCounter		AV	0
FilterSign		BI	6
FIlterSignAddress		AI	18
FilterReset		BO	4
Occupancy		MV	0
OccupiedCoolSetPoint		AV	1
OccupiedHeatSetPoint		AV	2
UnoccupiedCoolSetPoint		AV	3
UnoccupiedHeatSetPoint		AV	4
OccupancyContinuousCheck		BV	0
UnoccupiedDeadbandAction		BV	1
LockRemoteControl		BV	2
DIP_SW_S1_status		AI	9
DIP_SW_S2_status		AI	10
SerialNumber		AI	11
Number_of_IU_connected		AI	19

© HMS Industrial Networks S.L.U - All rights reserved
This information is subject to change without notice

IU_Address_status_reported		AI	20
IU_Pos_status_reported		AV	7
WindFree_mode_status		BI	16
WindFree_mode_command		BO	13
AirClean_mode_status		BI	17
AirClean_mode_command		BO	14
360_CST_AirFlow_Direction_status		MI	12
360_CST_AirFlow_Direction_command		MO	8
DualSetpoint_active		BV	5
DualSetpoint_Heat_Temperature_status		AI	21
DualSetpoint_Heat_Temperature_command		AO	3
DualSetpoint_Cool_Temperature_status		AI	22
DualSetpoint_Cool_Temperature_command		AO	4

6.3 *Objects and properties*

Below you can find relevant information for the objects and properties.

Object_Identifier: In the **Device Object**, is configurable writing directly on the property. from BACnet and can be set automatically or manually. When set automatically, it is set using a base address and the address selected in SW2 P1..P7.

Object_Name: In the **Device Object**, is configurable writing directly on this property.

Description: In the **Device Object**, is configurable writing directly on the property, length maximum 63 chars.

6.3.1 Samsung AC Gateway (Device Object Type)

Property Identifier	Property Datatype	Value	ASHRAE	IBOX
Object_Identifier	BACnetObjectIdentifier	(Device, 246000)	R	R
Object_Name	CharacterString	"INBACSAM001R100"	R	W
Object_Type	BACnetObjectType	DEVICE (8) (Device Object Type)	R	R
System_Status	BACnetDeviceStatus	OPERATIONAL (0)	R	R
Vendor_Name	CharacterString	"HMS Industrial Networks S.L.U (BU Intesis)"	R	R
Vendor_Identifier	Unsigned16	246	R	R
Model_Name	CharacterString	"INBACSAM001R100 "	R	R
Firmware_Revision	CharacterString	"12.1.1.2"	R	R
Application_Software_ Version	CharacterString	1.0.0.2	R	R
Location	CharacterString	""	O	-
Description	CharacterString	"Samsung NASA RC interface"	O	R
Protocol_Version	Unsigned	1	R	R
Protocol_Revision	Unsigned	12	R	R
Protocol_Services_ Supported	BACnetServiceSupported	Refer to section 5 [Service Types]	R	R
Protocol_Object_Types_ Supported	BACnetObjectTypes Supported	Refer to section 6.1 [Object Types]	R	R
Object_List	BACnetArray[N] of BACnetObjectIdentifier	BACnetARRAY[N]	R	R
Structured_Object_List	BACnetArray[N] of BACnetObjectIdentifier	-	O	-
Max_APDU_Length_ Accepted	Unsigned	480	R	R
Segmentation_Supported	BACnetSegmentation	SEGMENTED-BOTH (0)	R	R

© HMS Industrial Networks S.L.U - All rights reserved
This information is subject to change without notice

Max_Segments_accepted	Unsigned	16	O	R
VT_Classes_Supported	List of BACnetVTClass	-	O	-
Active_VT_Sessions	List of BACnetVTSession	-	O	-
Local_Date	Date	-	O	-
Local_Time	Time	-	O	-
UTC_Offset	INTEGER	-	O	-
Daylight_Savings_Status	BOOLEAN	-	O	-
APDU_Segment_Timeout	Unsigned	3000	R	R
APDU_Timeout	Unsigned	3000	R	R
Number_of_APDU_ Retries	Unsigned	3	R	R
List_Of_Session_Keys	List of BACnetSessionKey	-	O	-
Time_Synchronization_ Recipients	List of BACnetRecipient	-	O	-
Max_Master * **	Unsigned	32	R	W
Max_Info_Frames *	Unsigned	1	O	R
Device_Address_Binding	List of BACnetAddressBinding	NULL (empty)	R	R
Database_Revision	Unsigned	0	R	R
Configuration_Files	BACnetArray[N] of BACnetObjectIdentifier	-	O	-
Last_Restore_Time	BACnetTimeStamp	-	O	-
Backup_Failure_Timeout	Unsigned16	-	O	-
Active_COV_ Subscriptions	List of BACnetCOVSubscription	List of BACnetCOVSubscription	O	R
Slave_Proxy_Enable	BACnetArray[N] of BOOLEAN	-	O	-
Manual_Slave_Address_ Binding	List of BACnetAddressBinding	-	O	-
Auto_Slave_Discovery	BACnetArray[N] of BOOLEAN	-	O	-
Slave_Address_Binding	BACnetAddressBinding	-	O	-
Last_Restart_Reason	BACnetRestartReason	-	O	-
Time_Of_Device_Restart	BACnetTimeStamp	-	O	-
Restart_Notification_ Recipients	List of BACnetRecipient	-	O	-
UTC_Time_ Synchronization_ Recipients	List of BACnetRecipient	-	O	-
Time_Synchronization_ Interval	Unsigned	-	O	-
Align_Intervals	BOOLEAN	-	O	-
Interval_Offset	Unsigned	-	O	-
Profile_Name	CharacterString	-	O	-

© HMS Industrial Networks S.L.U - All rights reserved
This information is subject to change without notice

6.3.2 OnOff_status (Binary Input Object Type)

It indicates if the indoor unit is in On or Off status.

Property Identifier	Property Datatype	Value	ASHRAE	IBOX
Object_Identifier	BACnetObjectIdentifier	(Binary Input, 0)	R	R
Object_Name	CharacterString	“OnOff_status”	R	R
Object_Type	BACnetObjectType	BINARY_INPUT (3)	R	R
Present_Value	BACnetBinaryPV	INACTIVE (0) / ACTIVE (1)	R	R
Description	CharacterString	-	O	-
Device_Type	CharacterString	-	O	-
Status_Flags	BACnetStatusFlags	{FALSE, FALSE/TRUE, FALSE, FALSE}	R	R
Event_State	BACnetEventState	STATE_NORMAL (0)	R	R
Reliability	BACnetReliability	NO_FAULT_DETECTED (0), UNRELIABLE_OTHER (7)	O	R
Out_Of_Service	BOOLEAN	FALSE	R	R
Polarity	BACnetPolarity	NORMAL (0)	R	R
Inactive_Text	CharacterString	"Off"	O	R
Active_Text	CharacterString	“On”	O	R
Change_Of_State_Time	BACnetDatetime	-	O	-
Change_Of_State_Count	Unsigned	-	O	-
Time_Of_State_Count_Reset	BACnetDatetime	-	O	-
Elapsed_Active_Time	Unsigned	-	O	-
Time_Of_Active_Time_Reset	BACnetDatetime	-	O	-
Time_Delay	Unsigned	-	O	-
Notification_Class	Unsigned	-	O	-
Alarm_Value	BACnetBinaryPV	-	O	-
Event_Enable	BACnetEventTransitionBits	-	O	-
Acked_Transitions	BACnetEventTransitionBits	-	O	-
Notify_Type	BACnetNotifyType	-	O	-
Event_Time_Stamps	BACnetArray[N] of BACnetTimeStamp	-	O	-
Profile_Name	CharacterString	-	O	-

© HMS Industrial Networks S.L.U - All rights reserved
This information is subject to change without notice

6.3.3 OnOff_command (Binary Output Object Type)

It sets the indoor unit to On or Off.

Property Identifier	Property Datatype	Value	ASHRAE	IBOX
Object_Identifier	BACnetObjectIdentifier	(Binary Output, 0)	R	R
Object_Name	CharacterString	“OnOff_command”	R	R
Object_Type	BACnetObjectType	BINARY_OUTPUT (4)	R	R
Present_Value	BACnetBinaryPV	INACTIVE (0) / ACTIVE (1)	W	W
Description	CharacterString	-	O	-
Device_Type	CharacterString	-	O	-
Status_Flags	BACnetStatusFlags	{FALSE, FALSE, FALSE, FALSE}	R	R
Event_State	BACnetEventState	STATE_NORMAL (0)	R	R
Reliability	BACnetReliability	NO_FAULT_DETECTED (0)	O	R
Out_Of_Service	BOOLEAN	FALSE	R	R
Polarity	BACnetPolarity	NORMAL (0)	R	R
Inactive_Text	CharacterString	"Off"	O	R
Active_Text	CharacterString	“On"	O	R
Change_Of_State_Time	BACnetDatetime	-	O	-
Change_Of_State_Count	Unsigned	-	O	-
Time_Of_State_Count_Reset	BACnetDatetime	-	O	-
Elapsed_Active_Time	Unsigned	-	O	-
Time_Of_Active_Time_Reset	BACnetDatetime	-	O	-
Minimum_Off_Time	Unsigned32	-	O	-
Minimum_On_Time	Unsigned32	-	O	-
Priority_Array	BACnetPriorityArray	BACnetPriorityArray	R	R
Relinquish_Default	BACnetBinaryPV	INACTIVE (0)	R	R
Time_Delay	Unsigned	-	O	-
Notification_Class	Unsigned	-	O	-
Feedback_Value	BACnetBinaryPV	-	O	-
Event_Enable	BACnetEventTransitionBits	-	O	-
Acked_Transitions	BACnetEventTransitionBits	-	O	-
Notify_Type	BACnetNotifyType	-	O	-
Event_Time_Stamps	BACnetArray[N] of BACnetTimeStamp	-	O	-
Profile_Name	CharacterString	-	O	-

© HMS Industrial Networks S.L.U - All rights reserved
This information is subject to change without notice

6.3.4 Mode_status (Multistate Input Object Type)

It indicates the active mode for the indoor unit.

Property Identifier	Property Datatype	Value	ASHRAE	IBOX
Object_Identifier	BACnetObjectIdentifier	(Multi-state Input, 0)	R	R
Object_Name	CharacterString	"Mode_status"	R	R
Object_Type	BACnetObjectType	MULTISTATE_INPUT (13)	R	R
Present_Value	Unsigned	1 ~ 5	R	R
Description	CharacterString	-	O	-
Device_Type	CharacterString	-	O	-
Status_Flags	BACnetStatusFlags	{FALSE, FALSE/TRUE, FALSE, FALSE}	R	R
Event_State	BACnetEventState	STATE_NORMAL (0)	R	R
Reliability	BACnetReliability	NO_FAULT_DETECTED (0), UNRELIABLE_OTHER (7)	O	R
Out_Of_Service	BOOLEAN	FALSE	R	R
Number_Of_States	Unsigned	5	R	R
State_Text	BACnetArray[N] of CharacterString	*Check **Mode Status setting table** below.*	O	R
Time_Delay	Unsigned	-	O	-
Notification_Class	Unsigned	-	O	-
Alarm_Values	List of Unsigned	-	O	-
Fault_Values	List of Unsigned	-	O	-
Event_Enable	BACnetEventTransitionBits	-	O	-
Acked_Transitions	BACnetEventTransitionBits	-	O	-
Notify_Type	BACnetNotifyType	-	O	-
Event_Time_Stamps	BACnetArray[N] of BACnetTimeStamp	-	O	-
Profile_Name	CharacterString	-	O	-

Mode status setting table

Mode status interpretation is possible using the value in the following correspondence table.

Present_Value	Contents displayed in State_Text
1	Heat
2	Cool
3	Fan
4	Dry
5	Auto

© HMS Industrial Networks S.L.U - All rights reserved
This information is subject to change without notice

6.3.5 Mode_command (Multistate Output Object Type)

It allows control over the indoor unit's mode.

Property Identifier	Property Datatype	Value	ASHRAE	IBOX
Object_Identifier	BACnetObjectIdentifier	(Multi-state Output, 0)	R	R
Object_Name	CharacterString	"Mode_command"	R	R
Object_Type	BACnetObjectType	MULTISTATE_OUTPUT (14)	R	R
Present_Value	Unsigned	1 ~ 5	W	W
Description	CharacterString	-	O	-
Device_Type	CharacterString	-	O	-
Status_Flags	BACnetStatusFlags	{FALSE, FALSE, FALSE, FALSE}	R	R
Event_State	BACnetEventState	STATE_NORMAL (0)	R	R
Reliability	BACnetReliability	NO_FAULT_DETECTED (0)	O	R
Out_Of_Service	BOOLEAN	FALSE	R	R
Number_Of_States	Unsigned	5	R	R
State_Text	BACnetArray[N] of CharacterString	*Check **Mode Command setting table** below*	O	R
Priority_Array	BACnetPriorityArray	BACnetPriorityArray	R	R
Relinquish_Default	Unsigned	1	R	R
Time_Delay	Unsigned	-	O	-
Notification_Class	Unsigned	-	O	-
Feedback_Value	Unsigned	-	O	-
Event_Enable	BACnetEventTransitionBits	-	O	-
Acked_Transitions	BACnetEventTransitionBits	-	O	-
Notify_Type	BACnetNotifyType	-	O	-
Event_Time_Stamps	BACnetArray[N] of BACnetTimeStamp	-	O	-
Profile_Name	CharacterString	-	O	-

Mode Command setting table

Mode commands can be set using the values in the following correspondence table.

Present_Value	Contents displayed in State_Text
1	Heat
2	Cool
3	Fan
4	Dry
5	Auto

© HMS Industrial Networks S.L.U - All rights reserved
This information is subject to change without notice

6.3.6 Setpoint_status (Analog Input Object Type)

It indicates the current setpoint temperature in the indoor unit.

Property Identifier	Property Datatype	Value	ASHRAE	IBOX
Object_Identifier	BACnetObjectIdentifier	(Analog Input, 0)	R	R
Object_Name	CharacterString	“SetPoint_status”	R	R
Object_Type	BACnetObjectType	ANALOG_INPUT (0)	R	R
Present_Value	REAL	16…30 ºC 60…86 ºF	R	R
Description	CharacterString	-	O	-
Device_Type	CharacterString	-	O	-
Status_Flags	BACnetStatusFlags	{FALSE, FALSE/TRUE, FALSE, FALSE}	R	R
Event_State	BACnetEventState	STATE_NORMAL (0)	R	R
Reliability	BACnetReliability	NO_FAULT_DETECTED (0), UNRELIABLE_OTHER (7)	O	R
Out_Of_Service	BOOLEAN	FALSE	R	R
Update_Interval	Unsigned	-	O	-
Units **	BACnetEngineeringUnits	Degrees Celsius (62), Degrees Fahrenheit (64)	R	R
Min_Pres_Value	REAL	16 ºC // 60 ºF	O	R
Max_Pres_Value	REAL	30 ºC // 86 ºF	O	R
Resolution	REAL	-	O	-
COV_Increment	REAL	0	O	W
Time_Delay	Unsigned	-	O	-
Notification_Class	Unsigned	-	O	-
High_Limit	REAL	-	O	-
Low_Limit	REAL	-	O	-
Deadband	REAL	-	O	-
Limit_Enable	BACnetLimitEnable	-	O	-
Event_Enable	BACnetEventTransitionBits	-	O	-
Acked_Transitions	BACnetEventTransitionBits	-	O	-
Notify_Type	BACnetNotifyType	-	O	-
Event_Time_Stamps	BACnetArray[N] of BACnetTimeStamp	-	O	-
Profile_Name	CharacterString	-	O	-

** Use of Celsius or Fahrenheits units can be selected throught the switch configuration. Check section 2.2 for more information.

© HMS Industrial Networks S.L.U - All rights reserved
This information is subject to change without notice

6.3.7 Setpoint_command (Analog Output Object Type)

It sets the desired temperature in the indoor unit.

Property Identifier	Property Datatype	Value	ASHRAE	IBOX
Object_Identifier	BACnetObjectIdentifier	(Analog Output, 0)	R	R
Object_Name	CharacterString	“SetPoint_command”	R	R
Object_Type	BACnetObjectType	ANALOG_OUTPUT (1)	R	R
Present_Value	REAL	16…30 ºC 60…86 ºF	R	R
Description	CharacterString	-	O	-
Device_Type	CharacterString	-	O	-
Status_Flags	BACnetStatusFlags	{FALSE, FALSE, FALSE, FALSE}	R	R
Event_State	BACnetEventState	STATE_NORMAL (0)	R	R
Reliability	BACnetReliability	NO_FAULT_DETECTED (0)	O	R
Out_Of_Service	BOOLEAN	FALSE	R	R
Update_Interval	Unsigned	-	O	-
Units **	BACnetEngineeringUnits	Degrees Celsius (62), Degrees Fahrenheit (64)	R	R
Min_Pres_Value	REAL	16 ºC // 60 ºF	O	R
Max_Pres_Value	REAL	30 ºC // 86 ºF	O	R
Resolution	REAL	-	O	-
COV_Increment	REAL	0	O	W
Priority_Array	BACnetPriorityArray	BACnetPriorityArray	R	R
Relinquish_Default	Unsigned	22	R	R
Time_Delay	Unsigned	-	O	-
Notification_Class	Unsigned	-	O	-
High_Limit	REAL	-	O	-
Low_Limit	REAL	-	O	-
Deadband	REAL	-	O	-
Limit_Enable	BACnetLimitEnable	-	O	-
Event_Enable	BACnetEventTransitionBits	-	O	-
Acked_Transitions	BACnetEventTransitionBits	-	O	-
Notify_Type	BACnetNotifyType	-	O	-
Event_Time_Stamps	BACnetArray[N] of BACnetTimeStamp	-	O	-
Profile_Name	CharacterString	-	O	-

** Use of Celsius or Fahrenheits units can be selected throught the switch configuration. Check section 2.2 for more information.

© HMS Industrial Networks S.L.U - All rights reserved
This information is subject to change without notice

6.3.8 VirtualTempActive (Binary Input Object Type)

It indicates if the virtual temperature active is active or not.

Property Identifier	Property Datatype	Value	ASHRAE	IBOX
Object_Identifier	BACnetObjectIdentifier	(Binary Input, 14)	R	R
Object_Name	CharacterString	“VirtualTempActive”	R	R
Object_Type	BACnetObjectType	BINARY_INPUT (3)	R	R
Present_Value	BACnetBinaryPV	INACTIVE (0) / ACTIVE (1)	R	R
Description	CharacterString	-	O	-
Device_Type	CharacterString	-	O	-
Status_Flags	BACnetStatusFlags	{FALSE, FALSE/TRUE, FALSE, FALSE}	R	R
Event_State	BACnetEventState	STATE_NORMAL (0)	R	R
Reliability	BACnetReliability	NO_FAULT_DETECTED (0), UNRELIABLE_OTHER (7)	O	R
Out_Of_Service	BOOLEAN	FALSE	R	R
Polarity	BACnetPolarity	NORMAL (0)	R	R
Inactive_Text	CharacterString	"No"	O	R
Active_Text	CharacterString	“Yes”	O	R
Change_Of_State_Time	BACnetDatetime	-	O	-
Change_Of_State_Count	Unsigned	-	O	-
Time_Of_State_Count_Reset	BACnetDatetime	-	O	-
Elapsed_Active_Time	Unsigned	-	O	-
Time_Of_Active_Time_Reset	BACnetDatetime	-	O	-
Time_Delay	Unsigned	-	O	-
Notification_Class	Unsigned	-	O	-
Alarm_Value	BACnetBinaryPV	-	O	-
Event_Enable	BACnetEventTransitionBits	-	O	-
Acked_Transitions	BACnetEventTransitionBits	-	O	-
Notify_Type	BACnetNotifyType	-	O	-
Event_Time_Stamps	BACnetArray[N] of BACnetTimeStamp	-	O	-
Profile_Name	CharacterString	-	O	-

© HMS Industrial Networks S.L.U - All rights reserved
This information is subject to change without notice

6.3.9 FanSpeed_status (Multistate Input Object Type)

It indicates the fan speed status of the indoor unit.

Property Identifier	Property Datatype	Value	ASHRAE	IBOX
Object_Identifier	BACnetObjectIdentifier	(Multi-state Input, 1)	R	R
Object_Name	CharacterString	"FanSpeed_status"	R	R
Object_Type	BACnetObjectType	MULTISTATE_INPUT (13)	R	R
Present_Value	Unsigned	1 ~ 5	R	R
Description	CharacterString	-	O	-
Device_Type	CharacterString	-	O	-
Status_Flags	BACnetStatusFlags	{FALSE, FALSE/TRUE, FALSE, FALSE}	R	R
Event_State	BACnetEventState	STATE_NORMAL (0)	R	R
Reliability	BACnetReliability	NO_FAULT_DETECTED (0), UNRELIABLE_OTHER (7)	O	R
Out_Of_Service	BOOLEAN	FALSE/TRUE	R	R
Number_Of_States	Unsigned	5	R	R
State_Text	BACnetArray[N] of CharacterString	*Check **Fan Speed status setting table** below.*	O	R
Time_Delay	Unsigned	-	O	-
Notification_Class	Unsigned	-	O	-
Alarm_Values	List of Unsigned	-	O	-
Fault_Values	List of Unsigned	-	O	-
Event_Enable	BACnetEventTransitionBits	-	O	-
Acked_Transitions	BACnetEventTransitionBits	-	O	-
Notify_Type	BACnetNotifyType	-	O	-
Event_Time_Stamps	BACnetArray[N] of BACnetTimeStamp	-	O	-
Profile_Name	CharacterString	-	O	-

Fan Speed status setting table

Fan speed interpretation is possible using the value in the following correspondence table.

Present_Value	Contents displayed in State_Text
1	Auto
2	Fan Speed 1
3	Fan Speed 2
4	Fan Speed 3
5	Fan Speed 4

© HMS Industrial Networks S.L.U - All rights reserved
This information is subject to change without notice

6.3.10 FanSpeed_command (Multistate Output Object Type)

It allows control over the fan speed for the indoor unit.

Property Identifier	Property Datatype	Value	ASHRAE	IBOX
Object_Identifier	BACnetObjectIdentifier	(Multi-state Output, 1)	R	R
Object_Name	CharacterString	“FanSpeed_command”	R	R
Object_Type	BACnetObjectType	MULTISTATE_OUTPUT (14)	R	R
Present_Value	Unsigned	1 ~ 5	W	W
Description	CharacterString	-	O	-
Device_Type	CharacterString	-	O	-
Status_Flags	BACnetStatusFlags	{FALSE, FALSE, FALSE, FALSE}	R	R
Event_State	BACnetEventState	STATE_NORMAL (0)	R	R
Reliability	BACnetReliability	NO_FAULT_DETECTED (0)	O	R
Out_Of_Service	BOOLEAN	FALSE	R	R
Number_Of_States	Unsigned	5	R	R
State_Text	BACnetArray[N] of CharacterString	*Check **Fan Speed command setting table** below*	O	R
Priority_Array	BACnetPriorityArray	BACnetPriorityArray	R	R
Relinquish_Default	Unsigned	1	R	R
Time_Delay	Unsigned	-	O	-
Notification_Class	Unsigned	-	O	-
Feedback_Value	Unsigned	-	O	-
Event_Enable	BACnetEventTransitionBits	-	O	-
Acked_Transitions	BACnetEventTransitionBits	-	O	-
Notify_Type	BACnetNotifyType	-	O	-
Event_Time_Stamps	BACnetArray[N] of BACnetTimeStamp	-	O	-
Profile_Name	CharacterString	-	O	-

Fan Speed command setting table

Fan speed interpretation is possible using the value in the following correspondence table.

Present_Value	Contents displayed in State_Text
1	Auto
2	Fan Speed 1
3	Fan Speed 2
4	Fan Speed 3
5	Fan Speed 4

© HMS Industrial Networks S.L.U - All rights reserved
This information is subject to change without notice

6.3.11 AirDirectionUD_status (Multistate Input Object Type)

It indicates the status of the vertical vane (Up/Down) for the indoor unit.

Property Identifier	Property Datatype	Value	ASHRAE	IBOX
Object_Identifier	BACnetObjectIdentifier	(Multi-state Input, 2)	R	R
Object_Name	CharacterString	“AirDirectionUD_status”	R	R
Object_Type	BACnetObjectType	MULTISTATE_INPUT (13)	R	R
Present_Value	Unsigned	1 ~ 2	R	R
Description	CharacterString	-	O	-
Device_Type	CharacterString	-	O	-
Status_Flags	BACnetStatusFlags	{FALSE, FALSE/TRUE, FALSE, FALSE}	R	R
Event_State	BACnetEventState	STATE_NORMAL (0)	R	R
Reliability	BACnetReliability	NO_FAULT_DETECTED (0), UNRELIABLE_OTHER (7)	O	R
Out_Of_Service	BOOLEAN	FALSE/TRUE	R	R
Number_Of_States	Unsigned	8	R	R
State_Text	BACnetArray[N] of CharacterString	*Check **Air Direction Status table** below.*	O	R
Time_Delay	Unsigned	-	O	-
Notification_Class	Unsigned	-	O	-
Alarm_Values	List of Unsigned	-	O	-
Fault_Values	List of Unsigned	-	O	-
Event_Enable	BACnetEventTransitionBits	-	O	-
Acked_Transitions	BACnetEventTransitionBits	-	O	-
Notify_Type	BACnetNotifyType	-	O	-
Event_Time_Stamps	BACnetArray[N] of BACnetTimeStamp	-	O	-
Profile_Name	CharacterString	-	O	-

Air direction Up/Down status table

Air direction interpretation is possible using the value in the following correspondence table.

Pesent_Value	Contents displayed in State_Text
1	Auto/Stop
2	Swing

© HMS Industrial Networks S.L.U - All rights reserved
This information is subject to change without notice

6.3.12 AirDirectionUD_command (Multistate Output Object Type)

It allows control over the vertical air direction (Up/Down) for the indoor unit.

Property Identifier	Property Datatype	Value	ASHRAE	IBOX
Object_Identifier	BACnetObjectIdentifier	(Multi-state Output, 2)	R	R
Object_Name	CharacterString	“AirDirectionUD_command”	R	R
Object_Type	BACnetObjectType	MULTISTATE_OUTPUT (14)	R	R
Present_Value	Unsigned	1 ~ 2	W	W
Description	CharacterString	-	O	-
Device_Type	CharacterString	-	O	-
Status_Flags	BACnetStatusFlags	{FALSE, FALSE, FALSE, FALSE}	R	R
Event_State	BACnetEventState	STATE_NORMAL (0)	R	R
Reliability	BACnetReliability	NO_FAULT_DETECTED (0)	O	R
Out_Of_Service	BOOLEAN	FALSE	R	R
Number_Of_States	Unsigned	8	R	R
State_Text	BACnetArray[N] of CharacterString	*Check **Air Direction Command table** below*	O	R
Priority_Array	BACnetPriorityArray	-	R	R
Relinquish_Default	Unsigned	-	R	R
Time_Delay	Unsigned	-	O	-
Notification_Class	Unsigned	-	O	-
Feedback_Value	Unsigned	-	O	-
Event_Enable	BACnetEventTransitionBits	-	O	-
Acked_Transitions	BACnetEventTransitionBits	-	O	-
Notify_Type	BACnetNotifyType	-	O	-
Event_Time_Stamps	BACnetArray[N] of BACnetTimeStamp	-	O	-
Profile_Name	CharacterString	-	O	-

Air direction Up/Down Command table

Air direction commands can be set using the values in the following correspondence table.

Present_Value	Contents displayed in State_Text
1	Auto/Stop
2	Swing

© HMS Industrial Networks S.L.U - All rights reserved
This information is subject to change without notice

6.3.13 AirDirectionLR_status (Multistate Input Object Type)

It indicates the status of the horizontal vane (Left/Right) for the indoor unit.

Property Identifier	Property Datatype	Value	ASHRAE	IBOX
Object_Identifier	BACnetObjectIdentifier	(Multi-state Input, 3)	R	R
Object_Name	CharacterString	“AirDirectionLR_status”	R	R
Object_Type	BACnetObjectType	MULTISTATE_INPUT (13)	R	R
Present_Value	Unsigned	1 ~ 2	R	R
Description	CharacterString	-	O	-
Device_Type	CharacterString	-	O	-
Status_Flags	BACnetStatusFlags	{FALSE, FALSE/TRUE, FALSE, FALSE}	R	R
Event_State	BACnetEventState	STATE_NORMAL (0)	R	R
Reliability	BACnetReliability	NO_FAULT_DETECTED (0), UNRELIABLE_OTHER (7)	O	R
Out_Of_Service	BOOLEAN	FALSE/TRUE	R	R
Number_Of_States	Unsigned	8	R	R
State_Text	BACnetArray[N] of CharacterString	*Check **Air Direction Status table** below.*	O	R
Time_Delay	Unsigned	-	O	-
Notification_Class	Unsigned	-	O	-
Alarm_Values	List of Unsigned	-	O	-
Fault_Values	List of Unsigned	-	O	-
Event_Enable	BACnetEventTransitionBits	-	O	-
Acked_Transitions	BACnetEventTransitionBits	-	O	-
Notify_Type	BACnetNotifyType	-	O	-
Event_Time_Stamps	BACnetArray[N] of BACnetTimeStamp	-	O	-
Profile_Name	CharacterString	-	O	-

Air direction Left/Right status table

Air direction interpretation is possible using the value in the following correspondence table.

Pesent_Value	Contents displayed in State_Text
1	Auto/Stop
2	Swing

© HMS Industrial Networks S.L.U - All rights reserved
This information is subject to change without notice

6.3.14 AirDirectionLR_command (Multistate Output Object Type)

It allows control over the horizontal air direction (Left/Right) for the indoor unit.

Property Identifier	Property Datatype	Value	ASHRAE	IBOX
Object_Identifier	BACnetObjectIdentifier	(Multi-state Output, 3)	R	R
Object_Name	CharacterString	“AirDirectionLR_command”	R	R
Object_Type	BACnetObjectType	MULTISTATE_OUTPUT (14)	R	R
Present_Value	Unsigned	1 ~ 2	W	W
Description	CharacterString	-	O	-
Device_Type	CharacterString	-	O	-
Status_Flags	BACnetStatusFlags	{FALSE, FALSE, FALSE, FALSE}	R	R
Event_State	BACnetEventState	STATE_NORMAL (0)	R	R
Reliability	BACnetReliability	NO_FAULT_DETECTED (0)	O	R
Out_Of_Service	BOOLEAN	FALSE	R	R
Number_Of_States	Unsigned	8	R	R
State_Text	BACnetArray[N] of CharacterString	*Check **Air Direction Command table** below*	O	R
Priority_Array	BACnetPriorityArray	-	R	R
Relinquish_Default	Unsigned	-	R	R
Time_Delay	Unsigned	-	O	-
Notification_Class	Unsigned	-	O	-
Feedback_Value	Unsigned	-	O	-
Event_Enable	BACnetEventTransitionBits	-	O	-
Acked_Transitions	BACnetEventTransitionBits	-	O	-
Notify_Type	BACnetNotifyType	-	O	-
Event_Time_Stamps	BACnetArray[N] of BACnetTimeStamp	-	O	-
Profile_Name	CharacterString	-	O	-

Air direction Left/Right Command table

Air direction commands can be set using the values in the following correspondence table.

Present_Value	Contents displayed in State_Text
1	Auto/Stop
2	Swing

© HMS Industrial Networks S.L.U - All rights reserved
This information is subject to change without notice

6.3.15 RoomTemperature_status (Analog Input Object Type)

It indicates the room temperature from the sensor in the indoor unit.

Property Identifier	Property Datatype	Value	ASHRAE	IBOX
Object_Identifier	BACnetObjectIdentifier	(Analog Input, 0)	R	R
Object_Name	CharacterString	“RoomTemperature_status”	R	R
Object_Type	BACnetObjectType	ANALOG_INPUT (0)	R	R
Present_Value	REAL	16…30 ºC 60…86 ºF	R	R
Description	CharacterString	-	O	-
Device_Type	CharacterString	-	O	-
Status_Flags	BACnetStatusFlags	{FALSE, FALSE/TRUE, FALSE, FALSE}	R	R
Event_State	BACnetEventState	STATE_NORMAL (0)	R	R
Reliability	BACnetReliability	NO_FAULT_DETECTED (0), UNRELIABLE_OTHER (7)	O	R
Out_Of_Service	BOOLEAN	FALSE/TRUE	R	R
Update_Interval	Unsigned	-	O	-
Units	BACnetEngineeringUnits	Degrees Celsius (62) Degrees Fahrenheit (64)	R	R
Min_Pres_Value	REAL	-	O	-
Max_Pres_Value	REAL	-	O	-
Resolution	REAL	-	O	-
COV_Increment	REAL	0	O	W
Time_Delay	Unsigned	-	O	-
Notification_Class	Unsigned	-	O	-
High_Limit	REAL	-	O	-
Low_Limit	REAL	-	O	-
Deadband	REAL	-	O	-
Limit_Enable	BACnetLimitEnable	-	O	-
Event_Enable	BACnetEventTransitionBits	-	O	-
Acked_Transitions	BACnetEventTransitionBits	-	O	-
Notify_Type	BACnetNotifyType	-	O	-
Event_Time_Stamps	BACnetArray[N] of BACnetTimeStamp	-	O	-
Profile_Name	CharacterString	-	O	-

© HMS Industrial Networks S.L.U - All rights reserved
This information is subject to change without notice

6.3.16 RoomTemperature_command (Analog Output Object Type)

It sets the room temperature to be used on the Samsung AC system.

Property Identifier	Property Datatype	Value	ASHRAE	IBOX
Object_Identifier	BACnetObjectIdentifier	(Analog Output, 1)	R	R
Object_Name	CharacterString	“RoomTemperature_command”	R	R
Object_Type	BACnetObjectType	ANALOG_INPUT (0)	R	R
Present_Value	REAL	16…30 ºC 60…86 ºF	R	R
Description	CharacterString	-	O	-
Device_Type	CharacterString	-	O	-
Status_Flags	BACnetStatusFlags	{FALSE, FALSE, FALSE, FALSE}	R	R
Event_State	BACnetEventState	STATE_NORMAL (0)	R	R
Reliability	BACnetReliability	NO_FAULT_DETECTED (0)	O	R
Out_Of_Service	BOOLEAN	FALSE	R	R
Update_Interval	Unsigned	-	O	-
Units **	BACnetEngineeringUnits	Degrees Celsius (62) Degrees Fahrenheit (64)	R	R
Min_Pres_Value	REAL	-	O	-
Max_Pres_Value	REAL	-	O	-
Resolution	REAL	-	O	-
COV_Increment	REAL	0	O	W
Priority_Array	BACnetPriorityArray	BACnetPriorityArray	R	R
Relinquish_Default	Unsigned	22	R	R
Time_Delay	Unsigned	-	O	-
Notification_Class	Unsigned	-	O	-
High_Limit	REAL	-	O	-
Low_Limit	REAL	-	O	-
Deadband	REAL	-	O	-
Limit_Enable	BACnetLimitEnable	-	O	-
Event_Enable	BACnetEventTransitionBits	-	O	-
Acked_Transitions	BACnetEventTransitionBits	-	O	-
Notify_Type	BACnetNotifyType	-	O	-
Event_Time_Stamps	BACnetArray[N] of BACnetTimeStamp	-	O	-
Profile_Name	CharacterString	-	O	-

** Use of Celsius or Fahrenheits units can be selected throught the switch configuration. Check section 2.2 for more information.

© HMS Industrial Networks S.L.U - All rights reserved
This information is subject to change without notice

6.3.17 ErrorCode (Analog Input Object Type)

It indicates the current error present in the AC system.

Property Identifier	Property Datatype	Value	ASHRAE	IBOX
Object_Identifier	BACnetObjectIdentifier	(Analog Input, 2)	R	R
Object_Name	CharacterString	“ErrorCode”	R	R
Object_Type	BACnetObjectType	ANALOG_INPUT (0)	R	R
Present_Value	REAL	-1… 349*	R	R
Description	CharacterString	-	O	-
Device_Type	CharacterString	-	O	-
Status_Flags	BACnetStatusFlags	{FALSE, FALSE, FALSE, FALSE}	R	R
Event_State	BACnetEventState	STATE_NORMAL (0)	R	R
Reliability	BACnetReliability	NO_FAULT_DETECTED (0)	O	R
Out_Of_Service	BOOLEAN	FALSE	R	R
Update_Interval	Unsigned	300	O	-
Units	BACnetEngineeringUnits	NO_UNITS (95)	R	R
Min_Pres_Value	REAL	-	O	-
Max_Pres_Value	REAL	-	O	-
Resolution	REAL	-	O	-
COV_Increment	REAL	0	O	W
Time_Delay	Unsigned	-	O	-
Notification_Class	Unsigned	-	O	-
High_Limit	REAL	-	O	-
Low_Limit	REAL	-	O	-
Deadband	REAL	-	O	-
Limit_Enable	BACnetLimitEnable	-	O	-
Event_Enable	BACnetEventTransitionBits	-	O	-
Acked_Transitions	BACnetEventTransitionBits	-	O	-
Notify_Type	BACnetNotifyType	-	O	-
Event_Time_Stamps	BACnetArray[N] of BACnetTimeStamp	-	O	-
Profile_Name	CharacterString	-	O	-

* Check section 10 for more information about each error code.

6.3.18 ErrorCodeM (Multistate Input Object Type)

It indicates the current error present in the AC system.

© HMS Industrial Networks S.L.U - All rights reserved
This information is subject to change without notice

Property Identifier	Property Datatype	Value	ASHRAE	IBOX
Object_Identifier	BACnetObjectIdentifier	(Multi-state Input, 4)	R	R
Object_Name	CharacterString	“ErrorCodeM”	R	R
Object_Type	BACnetObjectType	MULTISTATE_INPUT (13)	R	R
Present_Value	Unsigned	0 ~ 57	R	R
Description	CharacterString	-	O	-
Device_Type	CharacterString	-	O	-
Status_Flags	BACnetStatusFlags	{FALSE, FALSE, FALSE, FALSE}	R	R
Event_State	BACnetEventState	STATE_NORMAL (0)	R	R
Reliability	BACnetReliability	NO_FAULT_DETECTED (0)	O	R
Out_Of_Service	BOOLEAN	FALSE	R	R
Number_Of_States	Unsigned	44	R	R
State_Text	BACnetArray[N] of CharacterString	*Check **Error Code table** below.*	O	R
Time_Delay	Unsigned	-	O	-
Notification_Class	Unsigned	-	O	-
Alarm_Values	List of Unsigned	-	O	-
Fault_Values	List of Unsigned	-	O	-
Event_Enable	BACnetEventTransitionBits	-	O	-
Acked_Transitions	BACnetEventTransitionBits	-	O	-
Notify_Type	BACnetNotifyType	-	O	-
Event_Time_Stamps	BACnetArray[N] of BACnetTimeStamp	-	O	-
Profile_Name	CharacterString	-	O	-

© HMS Industrial Networks S.L.U - All rights reserved
This information is subject to change without notice

Error Code table

In the table below you will find the error correspondence value.

ErrorCodeM	State_text
1	
2	CommError
3	Addressing Process
4	E101
5	E102
6	E121
7	E122
8	E123
9	E129
10	E153
11	E201
12	E202
13	E203
14	E221

ErrorCodeM	State_text
15	E231
16	E237
17	E251
18	E320
19	E402
20	E404
21	E419
22	E422
23	E425
24	E440
25	E441
26	E461
27	E462
28	E463

ErrorCodeM	State_text
29	E464
30	E465
31	E466
32	E467
33	E468
34	E469
35	E470
36	E471
37	E472
38	E473
39	E474
40	E475
41	E484
42	E485

ErrorCodeM	State_text
43	E500
44	E554
45	E556
46	E557
47	E601
48	E602
49	E604
50	E606
51	E607
52	E609
53	E618
54	E619
55	E620
56	E627
57	EA

Check section 10. Error Codes for more information.

© HMS Industrial Networks S.L.U - All rights reserved
This information is subject to change without notice

6.3.19 ErrorActive (Binary Input Object Type)

It indicates if there is an active error in the indoor unit.

Property Identifier	Property Datatype	Value	ASHRAE	IBOX
Object_Identifier	BACnetObjectIdentifier	(Binary Input, 1)	R	R
Object_Name	CharacterString	“ErrorActive”	R	R
Object_Type	BACnetObjectType	BINARY_INPUT (3)	R	R
Present_Value	BACnetBinaryPV	INACTIVE (0) / ACTIVE (1)	R	R
Description	CharacterString	-	O	-
Device_Type	CharacterString	-	O	-
Status_Flags	BACnetStatusFlags	{FALSE, FALSE, FALSE, FALSE}	R	R
Event_State	BACnetEventState	STATE_NORMAL (0)	R	R
Reliability	BACnetReliability	NO_FAULT_DETECTED (0)	O	R
Out_Of_Service	BOOLEAN	FALSE	R	R
Polarity	BACnetPolarity	NORMAL (0)	R	R
Inactive_Text	CharacterString	"No Error"	O	R
Active_Text	CharacterString	“Error”	O	R
Change_Of_State_Time	BACnetDatetime	-	O	-
Change_Of_State_Count	Unsigned	-	O	-
Time_Of_State_Count_Reset	BACnetDatetime	-	O	-
Elapsed_Active_Time	Unsigned	-	O	-
Time_Of_Active_Time_Reset	BACnetDatetime	-	O	-
Time_Delay	Unsigned	-	O	-
Notification_Class	Unsigned	-	O	-
Alarm_Value	BACnetBinaryPV	-	O	-
Event_Enable	BACnetEventTransitionBits	-	O	-
Acked_Transitions	BACnetEventTransitionBits	-	O	-
Notify_Type	BACnetNotifyType	-	O	-
Event_Time_Stamps	BACnetArray[N] of BACnetTimeStamp	-	O	-
Profile_Name	CharacterString	-	O	-

© HMS Industrial Networks S.L.U - All rights reserved
This information is subject to change without notice

6.3.20 ErrorAddress (Analog Input Object Type)

It indicates the indoor unit address where the error is active.

Property Identifier	Property Datatype	Value	ASHRAE	IBOX
Object_Identifier	BACnetObjectIdentifier	(Analog Input, 4)	R	R
Object_Name	CharacterString	“ErrorAddress”	R	R
Object_Type	BACnetObjectType	ANALOG_INPUT (0)	R	R
Present_Value	REAL		R	R
Description	CharacterString	-	O	-
Device_Type	CharacterString	-	O	-
Status_Flags	BACnetStatusFlags	{FALSE, FALSE/TRUE, FALSE, FALSE}	R	R
Event_State	BACnetEventState	STATE_NORMAL (0)	R	R
Reliability	BACnetReliability	NO_FAULT_DETECTED (0), UNRELIABLE_OTHER (7)	O	R
Out_Of_Service	BOOLEAN	FALSE/TRUE	R	R
Update_Interval	Unsigned	-	O	-
Units	BACnetEngineeringUnits	-	R	R
Min_Pres_Value	REAL	-	O	-
Max_Pres_Value	REAL	-	O	-
Resolution	REAL	-	O	-
COV_Increment	REAL	0	O	W
Time_Delay	Unsigned	-	O	-
Notification_Class	Unsigned	-	O	-
High_Limit	REAL	-	O	-
Low_Limit	REAL	-	O	-
Deadband	REAL	-	O	-
Limit_Enable	BACnetLimitEnable	-	O	-
Event_Enable	BACnetEventTransitionBits	-	O	-
Acked_Transitions	BACnetEventTransitionBits	-	O	-
Notify_Type	BACnetNotifyType	-	O	-
Event_Time_Stamps	BACnetArray[N] of BACnetTimeStamp	-	O	-
Profile_Name	CharacterString	-	O	-

© HMS Industrial Networks S.L.U - All rights reserved
This information is subject to change without notice

6.3.21 OnTimeCounter (Analog Value Object Type)

It indicates the amount of time the units have been running.

Property Identifier	Property Datatype	Value	ASHRAE	IBOX
Object_Identifier	BACnetObjectIdentifier	(Analog Value, 0)	R	R
Object_Name	CharacterString	“OnTimeCounter”	R	R
Object_Type	BACnetObjectType	ANALOG_VALUE (2)	R	R
Present_Value	REAL	0 ... 65535	R	R
Description	CharacterString	-	O	-
Status_Flags	BACnetStatusFlags	{FALSE, FALSE, FALSE, FALSE}	R	R
Event_State	BACnetEventState	STATE_NORMAL (0)	R	R
Reliability	BACnetReliability	NO_FAULT_DETECTED (0)	O	R
Out_Of_Service	BOOLEAN	FALSE	R	R
Update_Interval	Unsigned	-	O	-
Units	BACnetEngineeringUnits	Hours (71)	R	R
Min_Pres_Value	REAL	-	O	-
Max_Pres_Value	REAL	-	O	-
Resolution	REAL	-	O	-
COV_Increment	REAL	0	O	W
Time_Delay	Unsigned	-	O	-
Notification_Class	Unsigned	-	O	-
High_Limit	REAL	-	O	-
Low_Limit	REAL	-	O	-
Deadband	REAL	-	O	-
Limit_Enable	BACnetLimitEnable	-	O	-
Event_Enable	BACnetEventTransitionBits	-	O	-
Acked_Transitions	BACnetEventTransitionBits	-	O	-
Notify_Type	BACnetNotifyType	-	O	-
Event_Time_Stamps	BACnetArray[N] of BACnetTimeStamp	-	O	-
Profile_Name	CharacterString	-	O	-

© HMS Industrial Networks S.L.U - All rights reserved
This information is subject to change without notice

6.3.22 FilterSign (Binary Input Object Type)

It indicates if there is a filter needs to be changed.

Property Identifier	Property Datatype	Value	ASHRAE	IBOX
Object_Identifier	BACnetObjectIdentifier	(Binary Input, 6)	R	R
Object_Name	CharacterString	“FilterSign”	R	R
Object_Type	BACnetObjectType	BINARY_INPUT (3)	R	R
Present_Value	BACnetBinaryPV	No (0) / Yes (1)	R	R
Description	CharacterString	-	O	-
Device_Type	CharacterString	-	O	-
Status_Flags	BACnetStatusFlags	{FALSE, FALSE, FALSE, FALSE}	R	R
Event_State	BACnetEventState	STATE_NORMAL (0)	R	R
Reliability	BACnetReliability	NO_FAULT_DETECTED (0)	O	R
Out_Of_Service	BOOLEAN	FALSE	R	R
Polarity	BACnetPolarity	NORMAL (0)	R	R
Inactive_Text	CharacterString	"No"	O	R
Active_Text	CharacterString	“Yes”	O	R
Change_Of_State_Time	BACnetDatetime	-	O	-
Change_Of_State_Count	Unsigned	-	O	-
Time_Of_State_Count_Reset	BACnetDatetime	-	O	-
Elapsed_Active_Time	Unsigned	-	O	-
Time_Of_Active_Time_Reset	BACnetDatetime	-	O	-
Time_Delay	Unsigned	-	O	-
Notification_Class	Unsigned	-	O	-
Alarm_Value	BACnetBinaryPV	-	O	-
Event_Enable	BACnetEventTransitionBits	-	O	-
Acked_Transitions	BACnetEventTransitionBits	-	O	-
Notify_Type	BACnetNotifyType	-	O	-
Event_Time_Stamps	BACnetArray[N] of BACnetTimeStamp	-	O	-
Profile_Name	CharacterString	-	O	-

© HMS Industrial Networks S.L.U - All rights reserved
This information is subject to change without notice

6.3.23 FilterSignAddress (Analog Input Object Type)

It indicates the AC indoor unit address which reports the filter signal.

Property Identifier	Property Datatype	Value	ASHRAE	IBOX
Object_Identifier	BACnetObjectIdentifier	(Analog Input, 18)	R	R
Object_Name	CharacterString	“FilterSignAddress”	R	R
Object_Type	BACnetObjectType	ANALOG_INPUT (0)	R	R
Present_Value	REAL	-	R	R
Description	CharacterString	-	O	-
Device_Type	CharacterString	-	O	-
Status_Flags	BACnetStatusFlags	{FALSE, FALSE/TRUE, FALSE, FALSE}	R	R
Event_State	BACnetEventState	STATE_NORMAL (0)	R	R
Reliability	BACnetReliability	NO_FAULT_DETECTED (0), UNRELIABLE_OTHER (7)	O	R
Out_Of_Service	BOOLEAN	FALSE	R	R
Update_Interval	Unsigned	-	O	-
Units **	BACnetEngineeringUnits	-	R	R
Min_Pres_Value	REAL	-	O	R
Max_Pres_Value	REAL	-	O	R
Resolution	REAL	-	O	-
COV_Increment	REAL	0	O	W
Time_Delay	Unsigned	-	O	-
Notification_Class	Unsigned	-	O	-
High_Limit	REAL	-	O	-
Low_Limit	REAL	-	O	-
Deadband	REAL	-	O	-
Limit_Enable	BACnetLimitEnable	-	O	-
Event_Enable	BACnetEventTransitionBits	-	O	-
Acked_Transitions	BACnetEventTransitionBits	-	O	-
Notify_Type	BACnetNotifyType	-	O	-
Event_Time_Stamps	BACnetArray[N] of BACnetTimeStamp	-	O	-
Profile_Name	CharacterString	-	O	-

© HMS Industrial Networks S.L.U - All rights reserved
This information is subject to change without notice

6.3.24 FilterReset (Binary Output Object Type)

Resets the indoor unit filter.

Property Identifier	Property Datatype	Value	ASHRAE	IBOX
Object_Identifier	BACnetObjectIdentifier	(Binary Output, 4)	R	R
Object_Name	CharacterString	“OnOff_command”	R	R
Object_Type	BACnetObjectType	BINARY_OUTPUT (4)	R	R
Present_Value	BACnetBinaryPV	Normal (0) / Reset (1)	W	W
Description	CharacterString	-	O	-
Device_Type	CharacterString	-	O	-
Status_Flags	BACnetStatusFlags	{FALSE, FALSE, FALSE, FALSE}	R	R
Event_State	BACnetEventState	STATE_NORMAL (0)	R	R
Reliability	BACnetReliability	NO_FAULT_DETECTED (0)	O	R
Out_Of_Service	BOOLEAN	FALSE	R	R
Polarity	BACnetPolarity	NORMAL (0)	R	R
Inactive_Text	CharacterString	"Off"	O	R
Active_Text	CharacterString	“On"	O	R
Change_Of_State_Time	BACnetDatetime	-	O	-
Change_Of_State_Count	Unsigned	-	O	-
Time_Of_State_Count_Reset	BACnetDatetime	-	O	-
Elapsed_Active_Time	Unsigned	-	O	-
Time_Of_Active_Time_Reset	BACnetDatetime	-	O	-
Minimum_Off_Time	Unsigned32	-	O	-
Minimum_On_Time	Unsigned32	-	O	-
Priority_Array	BACnetPriorityArray	BACnetPriorityArray	R	R
Relinquish_Default	BACnetBinaryPV	INACTIVE (0)	R	R
Time_Delay	Unsigned	-	O	-
Notification_Class	Unsigned	-	O	-
Feedback_Value	BACnetBinaryPV	-	O	-
Event_Enable	BACnetEventTransitionBits	-	O	-
Acked_Transitions	BACnetEventTransitionBits	-	O	-
Notify_Type	BACnetNotifyType	-	O	-
Event_Time_Stamps	BACnetArray[N] of BACnetTimeStamp	-	O	-
Profile_Name	CharacterString	-	O	-

© HMS Industrial Networks S.L.U - All rights reserved
This information is subject to change without notice

6.3.25 Occupancy (Multistate Value Object Type)

It indicates the use or not of the occupancy function. Check section 7.3 for more information.

Property Identifier	Property Datatype	Value	ASHRAE	IBOX
Object_Identifier	BACnetObjectIdentifier	(Multi-state Output, 0)	R	R
Object_Name	CharacterString	“Occupancy”	R	R
Object_Type	BACnetObjectType	MULTISTATE_VALUE (19)	R	R
Present_Value	Unsigned	1 ~ 3	W	W
Description	CharacterString	-	O	-
Status_Flags	BACnetStatusFlags	{FALSE, FALSE, FALSE, FALSE}	R	R
Event_State	BACnetEventState	STATE_NORMAL (0)	R	R
Reliability	BACnetReliability	NO_FAULT_DETECTED (0)	O	R
Out_Of_Service	BOOLEAN	FALSE	R	R
Number_Of_States	Unsigned	3	R	R
State_Text	BACnetArray[N] of CharacterString	*Check **Occupancy setting table** below*	O	R
Priority_Array	BACnetPriorityArray	-	R	-
Relinquish_Default	Unsigned	-	R	-
Time_Delay	Unsigned	-	O	-
Notification_Class	Unsigned	-	O	-
Alarm_Value	Unsigned	-	O	-
Fault_Value	Unsigned		O	-
Event_Enable	BACnetEventTransitionBits	-	O	-
Acked_Transitions	BACnetEventTransitionBits	-	O	-
Notify_Type	BACnetNotifyType	-	O	-
Event_Time_Stamps	BACnetArray[N] of BACnetTimeStamp	-	O	-
Profile_Name	CharacterString	-	O	-

Occupancy values table

Check possible Occupancy values in the following correspondence table.

Pesent_Value	Contents displayed in State_Text
1	Occupied
2	Unoccupied
3	Disabled

6.3.26 OccupiedCoolSetPoint (Analog Value Object Type)

© HMS Industrial Networks S.L.U - All rights reserved
This information is subject to change without notice

It indicates the current Setpoint when Cool mode is selected, and Occupancy is enabled and the room is occupied. Check section 7.3 Occupancy for more information.

Property Identifier	Property Datatype	Value	ASHRAE	IBOX
Object_Identifier	BACnetObjectIdentifier	(Analog Value, 1)	R	R
Object_Name	CharacterString	“OccupiedCoolSetPoint”	R	R
Object_Type	BACnetObjectType	ANALOG_VALUE (2)	R	R
Present_Value	REAL	16…32 ºC 60…90 ºF	R	R
Description	CharacterString	-	O	-
Status_Flags	BACnetStatusFlags	{FALSE, FALSE, FALSE, FALSE}	R	R
Event_State	BACnetEventState	STATE_NORMAL (0)	R	R
Reliability	BACnetReliability	NO_FAULT_DETECTED (0)	O	R
Out_Of_Service	BOOLEAN	FALSE	R	R
Update_Interval	Unsigned	-	O	-
Units **	BACnetEngineeringUnits	Degrees Celsius (62) Degrees Fahrenheit (64)	R	R
Min_Pres_Value	REAL	-	O	-
Max_Pres_Value	REAL	-	O	-
Resolution	REAL	-	O	-
COV_Increment	REAL	0	O	W
Time_Delay	Unsigned	-	O	-
Notification_Class	Unsigned	-	O	-
High_Limit	REAL	-	O	-
Low_Limit	REAL	-	O	-
Deadband	REAL	-	O	-
Limit_Enable	BACnetLimitEnable	-	O	-
Event_Enable	BACnetEventTransitionBits	-	O	-
Acked_Transitions	BACnetEventTransitionBits	-	O	-
Notify_Type	BACnetNotifyType	-	O	-
Event_Time_Stamps	BACnetArray[N] of BACnetTimeStamp	-	O	-
Profile_Name	CharacterString	-	O	-

** Use of Celsius or Fahrenheits units can be selected throught the switch configuration. Check section 2.1 for more information.

6.3.27 OccupiedHeatSetPoint (Analog Value Object Type)

© HMS Industrial Networks S.L.U - All rights reserved
This information is subject to change without notice

It indicates the current Setpoint when Heat mode is selected, and Occupancy is enabled and the room is occupied. Check section 7.3 Occupancy for more information.

Property Identifier	Property Datatype	Value	ASHRAE	IBOX
Object_Identifier	BACnetObjectIdentifier	(Analog Value, 2)	R	R
Object_Name	CharacterString	“OccupiedHeatSetPoint”	R	R
Object_Type	BACnetObjectType	ANALOG_VALUE (2)	R	R
Present_Value	REAL	16…30 ºC 60…86 ºF	R	R
Description	CharacterString	-	O	-
Status_Flags	BACnetStatusFlags	{FALSE, FALSE, FALSE, FALSE}	R	R
Event_State	BACnetEventState	STATE_NORMAL (0)	R	R
Reliability	BACnetReliability	NO_FAULT_DETECTED (0)	O	R
Out_Of_Service	BOOLEAN	FALSE	R	R
Update_Interval	Unsigned	-	O	-
Units **	BACnetEngineeringUnits	Degrees Celsius (62) Degrees Fahrenheit (64)	R	R
Min_Pres_Value	REAL	-	O	-
Max_Pres_Value	REAL	-	O	-
Resolution	REAL	-	O	-
COV_Increment	REAL	0	O	W
Time_Delay	Unsigned	-	O	-
Notification_Class	Unsigned	-	O	-
High_Limit	REAL	-	O	-
Low_Limit	REAL	-	O	-
Deadband	REAL	-	O	-
Limit_Enable	BACnetLimitEnable	-	O	-
Event_Enable	BACnetEventTransitionBits	-	O	-
Acked_Transitions	BACnetEventTransitionBits	-	O	-
Notify_Type	BACnetNotifyType	-	O	-
Event_Time_Stamps	BACnetArray[N] of BACnetTimeStamp	-	O	-
Profile_Name	CharacterString	-	O	-

** Use of Celsius or Fahrenheits units can be selected throught the switch configuration. Check section 2.2 for more information.

6.3.28 UnoccupiedCoolSetPoint (Analog Value Object Type)

It indicates the current Setpoint when Cool mode is selected, and Occupancy is enabled and the room is unoccupied. Check section 7.3 Occupancy for more information.

© HMS Industrial Networks S.L.U - All rights reserved
This information is subject to change without notice

Property Identifier	Property Datatype	Value	ASHRAE	IBOX
Object_Identifier	BACnetObjectIdentifier	(Analog Value, 3)	R	R
Object_Name	CharacterString	“UnoccupiedCoolSetPoint”	R	R
Object_Type	BACnetObjectType	ANALOG_VALUE (2)	R	R
Present_Value	REAL	16…30 ºC 60…86 ºF	R	R
Description	CharacterString	-	O	-
Status_Flags	BACnetStatusFlags	{FALSE, FALSE, FALSE, FALSE}	R	R
Event_State	BACnetEventState	STATE_NORMAL (0)	R	R
Reliability	BACnetReliability	NO_FAULT_DETECTED (0)	O	R
Out_Of_Service	BOOLEAN	FALSE	R	R
Update_Interval	Unsigned	-	O	-
Units **	BACnetEngineeringUnits	Degrees Celsius (62) Degrees Fahrenheit (64)	R	R
Min_Pres_Value	REAL	-	O	-
Max_Pres_Value	REAL	-	O	-
Resolution	REAL	-	O	-
COV_Increment	REAL	0	O	W
Time_Delay	Unsigned	-	O	-
Notification_Class	Unsigned	-	O	-
High_Limit	REAL	-	O	-
Low_Limit	REAL	-	O	-
Deadband	REAL	-	O	-
Limit_Enable	BACnetLimitEnable	-	O	-
Event_Enable	BACnetEventTransitionBits	-	O	-
Acked_Transitions	BACnetEventTransitionBits	-	O	-
Notify_Type	BACnetNotifyType	-	O	-
Event_Time_Stamps	BACnetArray[N] of BACnetTimeStamp	-	O	-
Profile_Name	CharacterString	-	O	-

** Use of Celsius or Fahrenheits units can be selected throught the switch configuration. Check section 2.2 for more information.

© HMS Industrial Networks S.L.U - All rights reserved
This information is subject to change without notice

6.3.29 UnoccupiedHeatSetPoint (Analog Value Object Type)

It indicates the current Setpoint when Heat mode is selected, and Occupancy is enabled and the room is unoccupied. Check section 7.3 Occupancy for more information.

Property Identifier	Property Datatype	Value	ASHRAE	IBOX
Object_Identifier	BACnetObjectIdentifier	(Analog Value, 4)	R	R
Object_Name	CharacterString	“UnoccupiedHeatSetPoint”	R	R
Object_Type	BACnetObjectType	ANALOG_VALUE (2)	R	R
Present_Value	REAL	16…30 ºC 60…86 ºF	R	R
Description	CharacterString	-	O	-
Status_Flags	BACnetStatusFlags	{FALSE, FALSE, FALSE, FALSE}	R	R
Event_State	BACnetEventState	STATE_NORMAL (0)	R	R
Reliability	BACnetReliability	NO_FAULT_DETECTED (0)	O	R
Out_Of_Service	BOOLEAN	FALSE	R	R
Update_Interval	Unsigned	-	O	-
Units **	BACnetEngineeringUnits	Degrees Celsius (62) Degrees Fahrenheit (64)	R	R
Min_Pres_Value	REAL	-	O	-
Max_Pres_Value	REAL	-	O	-
Resolution	REAL	-	O	-
COV_Increment	REAL	0	O	W
Time_Delay	Unsigned	-	O	-
Notification_Class	Unsigned	-	O	-
High_Limit	REAL	-	O	-
Low_Limit	REAL	-	O	-
Deadband	REAL	-	O	-
Limit_Enable	BACnetLimitEnable	-	O	-
Event_Enable	BACnetEventTransitionBits	-	O	-
Acked_Transitions	BACnetEventTransitionBits	-	O	-
Notify_Type	BACnetNotifyType	-	O	-
Event_Time_Stamps	BACnetArray[N] of BACnetTimeStamp	-	O	-
Profile_Name	CharacterString	-	O	-

** Use of Celsius or Fahrenheits units can be selected throught the switch configuration. Check section 2.2 for more information.

6.3.30 OccupancyContinuousCheck (Binary Value Object Type)

© HMS Industrial Networks S.L.U - All rights reserved
This information is subject to change without notice

It indicates if the system is continuously checking the setpoint and occupancy conditions. Check section 7.3 Occupancy for more information.

Property Identifier	Property Datatype	Value	ASHRAE	IBOX
Object_Identifier	BACnetObjectIdentifier	(Binary Value, 0)	R	R
Object_Name	CharacterString	“OccupancyContinuousCheck”	R	R
Object_Type	BACnetObjectType	BINARY_VALUE (5)	R	R
Present_Value	BACnetBinaryPV	INACTIVE (0) / ACTIVE (1)	W	W
Description	CharacterString	-	O	-
Status_Flags	BACnetStatusFlags	{FALSE, FALSE, FALSE, FALSE}	R	R
Event_State	BACnetEventState	STATE_NORMAL (0)	R	R
Reliability	BACnetReliability	NO_FAULT_DETECTED (0)	O	R
Out_Of_Service	BOOLEAN	FALSE	R	R
Inactive_Text	CharacterString	"Disabled"	O	R
Active_Text	CharacterString	“Enabled"	O	R
Change_Of_State_Time	BACnetDatetime	-	O	-
Change_Of_State_Count	Unsigned	-	O	-
Time_Of_State_Count_Reset	BACnetDatetime	-	O	-
Elapsed_Active_Time	Unsigned	-	O	-
Time_Of_Active_Time_Reset	BACnetDatetime	-	O	-
Minimum_Off_Time	Unsigned32	-	O	-
Minimum_On_Time	Unsigned32	-	O	-
Priority_Array	BACnetPriorityArray	BACnetPriorityArray	R	-
Relinquish_Default	BACnetBinaryPV	INACTIVE (0)	R	-
Time_Delay	Unsigned	-	O	-
Notification_Class	Unsigned	-	O	-
Alarm_Value	BACnetBinaryPV	-	O	-
Event_Enable	BACnetEventTransitionBits	-	O	-
Acked_Transitions	BACnetEventTransitionBits	-	O	-
Notify_Type	BACnetNotifyType	-	O	-
Event_Time_Stamps	BACnetArray[N] of BACnetTimeStamp	-	O	-
Profile_Name	CharacterString	-	O	-

6.3.31 UnoccupiedDeadbandAction (Binary Value Object Type)

It indicates the action to be performed by the system when Unoccupancy is enabled and Room Temperature is within the deadband. Check section 7.3 Occupancy for more information.

© HMS Industrial Networks S.L.U - All rights reserved
This information is subject to change without notice

Property Identifier	Property Datatype	Value	ASHRAE	IBOX
Object_Identifier	BACnetObjectIdentifier	(Binary Value, 1)	R	R
Object_Name	CharacterString	“UnoccupiedDeadbandAction”	R	R
Object_Type	BACnetObjectType	BINARY_VALUE (5)	R	R
Present_Value	BACnetBinaryPV	INACTIVE (0) / ACTIVE (1)	W	W
Description	CharacterString	-	O	-
Status_Flags	BACnetStatusFlags	{FALSE, FALSE, FALSE, FALSE}	R	R
Event_State	BACnetEventState	STATE_NORMAL (0)	R	R
Reliability	BACnetReliability	NO_FAULT_DETECTED (0)	O	R
Out_Of_Service	BOOLEAN	FALSE	R	R
Inactive_Text	CharacterString	"Off"	O	R
Active_Text	CharacterString	“CurrentMode"	O	R
Change_Of_State_Time	BACnetDatetime	-	O	-
Change_Of_State_Count	Unsigned	-	O	-
Time_Of_State_Count_Reset	BACnetDatetime	-	O	-
Elapsed_Active_Time	Unsigned	-	O	-
Time_Of_Active_Time_Reset	BACnetDatetime	-	O	-
Minimum_Off_Time	Unsigned32	-	O	-
Minimum_On_Time	Unsigned32	-	O	-
Priority_Array	BACnetPriorityArray	BACnetPriorityArray	R	-
Relinquish_Default	BACnetBinaryPV	INACTIVE (0)	R	-
Time_Delay	Unsigned	-	O	-
Notification_Class	Unsigned	-	O	-
Alarm_Value	BACnetBinaryPV	-	O	-
Event_Enable	BACnetEventTransitionBits	-	O	-
Acked_Transitions	BACnetEventTransitionBits	-	O	-
Notify_Type	BACnetNotifyType	-	O	-
Event_Time_Stamps	BACnetArray[N] of BACnetTimeStamp	-	O	-
Profile_Name	CharacterString	-	O	-

6.3.32 LockRemoteControl (Binary Value Object Type)

It is used to lock or unlock the Samsung wired Remote Controller.

© HMS Industrial Networks S.L.U - All rights reserved
This information is subject to change without notice

Property Identifier	Property Datatype	Value	ASHRAE	IBOX
Object_Identifier	BACnetObjectIdentifier	(Binary Value, 2)	R	R
Object_Name	CharacterString	“LockRemoteControl”	R	R
Object_Type	BACnetObjectType	BINARY_VALUE (5)	R	R
Present_Value	BACnetBinaryPV	INACTIVE (0) / ACTIVE (1)	W	W
Description	CharacterString	-	O	-
Status_Flags	BACnetStatusFlags	{FALSE, FALSE, FALSE, FALSE}	R	R
Event_State	BACnetEventState	STATE_NORMAL (0)	R	R
Reliability	BACnetReliability	NO_FAULT_DETECTED (0)	O	R
Out_Of_Service	BOOLEAN	FALSE	R	R
Inactive_Text	CharacterString	"Unlocked"	O	R
Active_Text	CharacterString	“Locked"	O	R
Change_Of_State_Time	BACnetDatetime	-	O	-
Change_Of_State_Count	Unsigned	-	O	-
Time_Of_State_Count_Reset	BACnetDatetime	-	O	-
Elapsed_Active_Time	Unsigned	-	O	-
Time_Of_Active_Time_Reset	BACnetDatetime	-	O	-
Minimum_Off_Time	Unsigned32	-	O	-
Minimum_On_Time	Unsigned32	-	O	-
Priority_Array	BACnetPriorityArray	BACnetPriorityArray	R	-
Relinquish_Default	BACnetBinaryPV	INACTIVE (0)	R	-
Time_Delay	Unsigned	-	O	-
Notification_Class	Unsigned	-	O	-
Alarm_Value	BACnetBinaryPV	-	O	-
Event_Enable	BACnetEventTransitionBits	-	O	-
Acked_Transitions	BACnetEventTransitionBits	-	O	-
Notify_Type	BACnetNotifyType	-	O	-
Event_Time_Stamps	BACnetArray[N] of BACnetTimeStamp	-	O	-
Profile_Name	CharacterString	-	O	-

6.3.33 DIP_SW_S1_status

It indicates the DIP-Switch S1 position status.

Property Identifier	Property Datatype	Value	ASHRAE	IBOX

© HMS Industrial Networks S.L.U - All rights reserved
This information is subject to change without notice

Object_Identifier	BACnetObjectIdentifier	(Analog Input, 9)	R	R
Object_Name	CharacterString	“DIP_SW_S1_status”	R	R
Object_Type	BACnetObjectType	ANALOG_INPUT (0)	R	R
Present_Value	REAL	-	R	R
Description	CharacterString	-	O	-
Device_Type	CharacterString	-	O	-
Status_Flags	BACnetStatusFlags	{FALSE, FALSE/TRUE, FALSE, FALSE}	R	R
Event_State	BACnetEventState	STATE_NORMAL (0)	R	R
Reliability	BACnetReliability	NO_FAULT_DETECTED (0), UNRELIABLE_OTHER (7)	O	R
Out_Of_Service	BOOLEAN	FALSE	R	R
Update_Interval	Unsigned	-	O	-
Units **	BACnetEngineeringUnits	-	R	R
Min_Pres_Value	REAL	-	O	R
Max_Pres_Value	REAL	-	O	R
Resolution	REAL	-	O	-
COV_Increment	REAL	0	O	W
Time_Delay	Unsigned	-	O	-
Notification_Class	Unsigned	-	O	-
High_Limit	REAL	-	O	-
Low_Limit	REAL	-	O	-
Deadband	REAL	-	O	-
Limit_Enable	BACnetLimitEnable	-	O	-
Event_Enable	BACnetEventTransitionBits	-	O	-
Acked_Transitions	BACnetEventTransitionBits	-	O	-
Notify_Type	BACnetNotifyType	-	O	-
Event_Time_Stamps	BACnetArray[N] of BACnetTimeStamp	-	O	-
Profile_Name	CharacterString	-	O	-

© HMS Industrial Networks S.L.U - All rights reserved
This information is subject to change without notice

6.3.34 DIP_SW_S2_status

It indicates the DIP-Switch S2 position status.

Property Identifier	Property Datatype	Value	ASHRAE	IBOX
Object_Identifier	BACnetObjectIdentifier	(Analog Input, 10)	R	R
Object_Name	CharacterString	“DIP_SW_S2_status”	R	R
Object_Type	BACnetObjectType	ANALOG_INPUT (0)	R	R
Present_Value	REAL	-	R	R
Description	CharacterString	-	O	-
Device_Type	CharacterString	-	O	-
Status_Flags	BACnetStatusFlags	{FALSE, FALSE/TRUE, FALSE, FALSE}	R	R
Event_State	BACnetEventState	STATE_NORMAL (0)	R	R
Reliability	BACnetReliability	NO_FAULT_DETECTED (0), UNRELIABLE_OTHER (7)	O	R
Out_Of_Service	BOOLEAN	FALSE	R	R
Update_Interval	Unsigned	-	O	-
Units **	BACnetEngineeringUnits	-	R	R
Min_Pres_Value	REAL	-	O	R
Max_Pres_Value	REAL	-	O	R
Resolution	REAL	-	O	-
COV_Increment	REAL	0	O	W
Time_Delay	Unsigned	-	O	-
Notification_Class	Unsigned	-	O	-
High_Limit	REAL	-	O	-
Low_Limit	REAL	-	O	-
Deadband	REAL	-	O	-
Limit_Enable	BACnetLimitEnable	-	O	-
Event_Enable	BACnetEventTransitionBits	-	O	-
Acked_Transitions	BACnetEventTransitionBits	-	O	-
Notify_Type	BACnetNotifyType	-	O	-
Event_Time_Stamps	BACnetArray[N] of BACnetTimeStamp	-	O	-
Profile_Name	CharacterString	-	O	-

© HMS Industrial Networks S.L.U - All rights reserved
This information is subject to change without notice

6.3.35 SerialNumber (Analog Input Object Type)

It indicates the serial number of the device. Serial number follows the next rule 000KXXXXX, where:

- 000K is constant and not included in Present Value property.
- XXXXX is the unique serial number of the device. It is the information provided through the Present Value.

Property Identifier	Property Datatype	Value	ASHRAE	IBOX
Object_Identifier	BACnetObjectIdentifier	(Analog Input, 11)	R	R
Object_Name	CharacterString	“SerialNumber”	R	R
Object_Type	BACnetObjectType	ANALOG_INPUT (0)	R	R
Present_Value *	REAL	-	R	R
Description	CharacterString	-	O	-
Device_Type	CharacterString	-	O	-
Status_Flags	BACnetStatusFlags	{FALSE, FALSE/TRUE, FALSE, FALSE}	R	R
Event_State	BACnetEventState	STATE_NORMAL (0)	R	R
Reliability	BACnetReliability	NO_FAULT_DETECTED (0), UNRELIABLE_OTHER (7)	O	R
Out_Of_Service	BOOLEAN	FALSE	R	R
Update_Interval	Unsigned	-	O	-
Units *	BACnetEngineeringUnits	-	R	R
Min_Pres_Value *	REAL	-	O	R
Max_Pres_Value *	REAL	-	O	R
Resolution	REAL	-	O	-
COV_Increment	REAL	0	O	W
Time_Delay	Unsigned	-	O	-
Notification_Class	Unsigned	-	O	-
High_Limit	REAL	-	O	-
Low_Limit	REAL	-	O	-
Deadband	REAL	-	O	-
Limit_Enable	BACnetLimitEnable	-	O	-
Event_Enable	BACnetEventTransitionBits	-	O	-
Acked_Transitions	BACnetEventTransitionBits	-	O	-
Notify_Type	BACnetNotifyType	-	O	-
Event_Time_Stamps	BACnetArray[N] of BACnetTimeStamp	-	O	-
Profile_Name	CharacterString	-	O	-

© HMS Industrial Networks S.L.U - All rights reserved
This information is subject to change without notice

6.3.36 Number_of_IU_connected (Analog Input Object Type)

Reports the number of connected AC units to the remote controller bus.

Property Identifier	Property Datatype	Value	ASHRAE	IBOX
Object_Identifier	BACnetObjectIdentifier	(Analog Input, 19)	R	R
Object_Name	CharacterString	“Number_of_IU_connected”	R	R
Object_Type	BACnetObjectType	ANALOG_INPUT (0)	R	R
Present_Value *	REAL	-	R	R
Description	CharacterString	-	O	-
Device_Type	CharacterString	-	O	-
Status_Flags	BACnetStatusFlags	{FALSE, FALSE/TRUE, FALSE, FALSE}	R	R
Event_State	BACnetEventState	STATE_NORMAL (0)	R	R
Reliability	BACnetReliability	NO_FAULT_DETECTED (0), UNRELIABLE_OTHER (7)	O	R
Out_Of_Service	BOOLEAN	FALSE	R	R
Update_Interval	Unsigned	-	O	-
Units *	BACnetEngineeringUnits	-	R	R
Min_Pres_Value *	REAL	-	O	R
Max_Pres_Value *	REAL	-	O	R
Resolution	REAL	-	O	-
COV_Increment	REAL	0	O	W
Time_Delay	Unsigned	-	O	-
Notification_Class	Unsigned	-	O	-
High_Limit	REAL	-	O	-
Low_Limit	REAL	-	O	-
Deadband	REAL	-	O	-
Limit_Enable	BACnetLimitEnable	-	O	-
Event_Enable	BACnetEventTransitionBits	-	O	-
Acked_Transitions	BACnetEventTransitionBits	-	O	-
Notify_Type	BACnetNotifyType	-	O	-
Event_Time_Stamps	BACnetArray[N] of BACnetTimeStamp	-	O	-
Profile_Name	CharacterString	-	O	-

© HMS Industrial Networks S.L.U - All rights reserved
This information is subject to change without notice

6.3.37 IU_Address_status_reported (Analog Input Object Type)

Inidicates the address of the AC unit reporting their status.

Property Identifier	Property Datatype	Value	ASHRAE	IBOX
Object_Identifier	BACnetObjectIdentifier	(Analog Input, 20)	R	R
Object_Name	CharacterString	“IU_Address_status_reported”	R	R
Object_Type	BACnetObjectType	ANALOG_INPUT (0)	R	R
Present_Value *	REAL	-	R	R
Description	CharacterString	-	O	-
Device_Type	CharacterString	-	O	-
Status_Flags	BACnetStatusFlags	{FALSE, FALSE/TRUE, FALSE, FALSE}	R	R
Event_State	BACnetEventState	STATE_NORMAL (0)	R	R
Reliability	BACnetReliability	NO_FAULT_DETECTED (0), UNRELIABLE_OTHER (7)	O	R
Out_Of_Service	BOOLEAN	FALSE	R	R
Update_Interval	Unsigned	-	O	-
Units *	BACnetEngineeringUnits	-	R	R
Min_Pres_Value *	REAL	-	O	R
Max_Pres_Value *	REAL	-	O	R
Resolution	REAL	-	O	-
COV_Increment	REAL	0	O	W
Time_Delay	Unsigned	-	O	-
Notification_Class	Unsigned	-	O	-
High_Limit	REAL	-	O	-
Low_Limit	REAL	-	O	-
Deadband	REAL	-	O	-
Limit_Enable	BACnetLimitEnable	-	O	-
Event_Enable	BACnetEventTransitionBits	-	O	-
Acked_Transitions	BACnetEventTransitionBits	-	O	-
Notify_Type	BACnetNotifyType	-	O	-
Event_Time_Stamps	BACnetArray[N] of BACnetTimeStamp	-	O	-
Profile_Name	CharacterString	-	O	-

© HMS Industrial Networks S.L.U - All rights reserved
This information is subject to change without notice

6.3.38 IU_Pos_status_reported (Analog Value Object Type)

Reports the indoor unit position that reports its status.

Property Identifier	Property Datatype	Value	ASHRAE	IBOX
Object_Identifier	BACnetObjectIdentifier	(Analog Value, 7)	R	R
Object_Name	CharacterString	“UI_Pos_status_reported”	R	R
Object_Type	BACnetObjectType	ANALOG_VALUE (2)	R	R
Present_Value	REAL	0 … 16	R	R
Description	CharacterString	-	O	-
Status_Flags	BACnetStatusFlags	{FALSE, FALSE, FALSE, FALSE}	R	R
Event_State	BACnetEventState	STATE_NORMAL (0)	R	R
Reliability	BACnetReliability	NO_FAULT_DETECTED (0)	O	R
Out_Of_Service	BOOLEAN	FALSE	R	R
Update_Interval	Unsigned	-	O	-
Units **	BACnetEngineeringUnits	-	R	R
Min_Pres_Value	REAL	-	O	-
Max_Pres_Value	REAL	-	O	-
Resolution	REAL	-	O	-
COV_Increment	REAL	0	O	W
Time_Delay	Unsigned	-	O	-
Notification_Class	Unsigned	-	O	-
High_Limit	REAL	-	O	-
Low_Limit	REAL	-	O	-
Deadband	REAL	-	O	-
Limit_Enable	BACnetLimitEnable	-	O	-
Event_Enable	BACnetEventTransitionBits	-	O	-
Acked_Transitions	BACnetEventTransitionBits	-	O	-
Notify_Type	BACnetNotifyType	-	O	-
Event_Time_Stamps	BACnetArray[N] of BACnetTimeStamp	-	O	-
Profile_Name	CharacterString	-	O	-

** Use of Celsius or Fahrenheits units can be selected throught the switch configuration. Check section 2.2 for more information.

© HMS Industrial Networks S.L.U - All rights reserved
This information is subject to change without notice

6.3.39 WindFree_mode_status (Binary Input Object Type)

Indicates if the AC unit is working in WindFree mode.

Property Identifier	Property Datatype	Value	ASHRAE	IBOX
Object_Identifier	BACnetObjectIdentifier	(Binary Input, 16)	R	R
Object_Name	CharacterString	“WindFree_mode_status”	R	R
Object_Type	BACnetObjectType	BINARY_INPUT (3)	R	R
Present_Value	BACnetBinaryPV	INACTIVE (0) / ACTIVE (1)	R	R
Description	CharacterString	-	O	-
Device_Type	CharacterString	-	O	-
Status_Flags	BACnetStatusFlags	{FALSE, FALSE, FALSE, FALSE}	R	R
Event_State	BACnetEventState	STATE_NORMAL (0)	R	R
Reliability	BACnetReliability	NO_FAULT_DETECTED (0)	O	R
Out_Of_Service	BOOLEAN	FALSE	R	R
Polarity	BACnetPolarity	NORMAL (0)	R	R
Inactive_Text	CharacterString	"Off"	O	R
Active_Text	CharacterString	“On”	O	R
Change_Of_State_Time	BACnetDatetime	-	O	-
Change_Of_State_Count	Unsigned	-	O	-
Time_Of_State_Count_Reset	BACnetDatetime	-	O	-
Elapsed_Active_Time	Unsigned	-	O	-
Time_Of_Active_Time_Reset	BACnetDatetime	-	O	-
Time_Delay	Unsigned	-	O	-
Notification_Class	Unsigned	-	O	-
Alarm_Value	BACnetBinaryPV	-	O	-
Event_Enable	BACnetEventTransitionBits	-	O	-
Acked_Transitions	BACnetEventTransitionBits	-	O	-
Notify_Type	BACnetNotifyType	-	O	-
Event_Time_Stamps	BACnetArray[N] of BACnetTimeStamp	-	O	-
Profile_Name	CharacterString	-	O	-

© HMS Industrial Networks S.L.U - All rights reserved
This information is subject to change without notice

6.3.40 WindFree_mode_command (Binary Output Object Type)

Sets the AC-unit in WindFree mode.

Property Identifier	Property Datatype	Value	ASHRAE	IBOX
Object_Identifier	BACnetObjectIdentifier	(Binary Output, 13)	R	R
Object_Name	CharacterString	“WindFree_mode_command”	R	R
Object_Type	BACnetObjectType	BINARY_OUTPUT (4)	R	R
Present_Value	BACnetBinaryPV	INACTIVE (0) / ACTIVE (1)	W	W
Description	CharacterString	-	O	-
Device_Type	CharacterString	-	O	-
Status_Flags	BACnetStatusFlags	{FALSE, FALSE, FALSE, FALSE}	R	R
Event_State	BACnetEventState	STATE_NORMAL (0)	R	R
Reliability	BACnetReliability	NO_FAULT_DETECTED (0)	O	R
Out_Of_Service	BOOLEAN	FALSE	R	R
Polarity	BACnetPolarity	NORMAL (0)	R	R
Inactive_Text	CharacterString	"Off"	O	R
Active_Text	CharacterString	“On"	O	R
Change_Of_State_Time	BACnetDatetime	-	O	-
Change_Of_State_Count	Unsigned	-	O	-
Time_Of_State_Count_Reset	BACnetDatetime	-	O	-
Elapsed_Active_Time	Unsigned	-	O	-
Time_Of_Active_Time_Reset	BACnetDatetime	-	O	-
Minimum_Off_Time	Unsigned32	-	O	-
Minimum_On_Time	Unsigned32	-	O	-
Priority_Array	BACnetPriorityArray	BACnetPriorityArray	R	R
Relinquish_Default	BACnetBinaryPV	INACTIVE (0)	R	R
Time_Delay	Unsigned	-	O	-
Notification_Class	Unsigned	-	O	-
Feedback_Value	BACnetBinaryPV	-	O	-
Event_Enable	BACnetEventTransitionBits	-	O	-
Acked_Transitions	BACnetEventTransitionBits	-	O	-
Notify_Type	BACnetNotifyType	-	O	-
Event_Time_Stamps	BACnetArray[N] of BACnetTimeStamp	-	O	-
Profile_Name	CharacterString	-	O	-

© HMS Industrial Networks S.L.U - All rights reserved
This information is subject to change without notice

6.3.41 AirClean_mode_command (Binary Output Object Type)

It sets the indoor unit to to AirClean mode.

Property Identifier	Property Datatype	Value	ASHRAE	IBOX
Object_Identifier	BACnetObjectIdentifier	(Binary Output, 14)	R	R
Object_Name	CharacterString	“AirClean_mode_command”	R	R
Object_Type	BACnetObjectType	BINARY_OUTPUT (4)	R	R
Present_Value	BACnetBinaryPV	INACTIVE (0) / ACTIVE (1)	W	W
Description	CharacterString	-	O	-
Device_Type	CharacterString	-	O	-
Status_Flags	BACnetStatusFlags	{FALSE, FALSE, FALSE, FALSE}	R	R
Event_State	BACnetEventState	STATE_NORMAL (0)	R	R
Reliability	BACnetReliability	NO_FAULT_DETECTED (0)	O	R
Out_Of_Service	BOOLEAN	FALSE	R	R
Polarity	BACnetPolarity	NORMAL (0)	R	R
Inactive_Text	CharacterString	"Off"	O	R
Active_Text	CharacterString	“On"	O	R
Change_Of_State_Time	BACnetDatetime	-	O	-
Change_Of_State_Count	Unsigned	-	O	-
Time_Of_State_Count_Reset	BACnetDatetime	-	O	-
Elapsed_Active_Time	Unsigned	-	O	-
Time_Of_Active_Time_Reset	BACnetDatetime	-	O	-
Minimum_Off_Time	Unsigned32	-	O	-
Minimum_On_Time	Unsigned32	-	O	-
Priority_Array	BACnetPriorityArray	BACnetPriorityArray	R	R
Relinquish_Default	BACnetBinaryPV	INACTIVE (0)	R	R
Time_Delay	Unsigned	-	O	-
Notification_Class	Unsigned	-	O	-
Feedback_Value	BACnetBinaryPV	-	O	-
Event_Enable	BACnetEventTransitionBits	-	O	-
Acked_Transitions	BACnetEventTransitionBits	-	O	-
Notify_Type	BACnetNotifyType	-	O	-
Event_Time_Stamps	BACnetArray[N] of BACnetTimeStamp	-	O	-
Profile_Name	CharacterString	-	O	-

© HMS Industrial Networks S.L.U - All rights reserved
This information is subject to change without notice

6.3.42 AirClean_mode_status (Binary Input Object Type)

Indicates if the AC unit is working in AirClean mode.

Property Identifier	Property Datatype	Value	ASHRAE	IBOX
Object_Identifier	BACnetObjectIdentifier	(Binary Input, 17)	R	R
Object_Name	CharacterString	“ErrorActive”	R	R
Object_Type	BACnetObjectType	BINARY_INPUT (3)	R	R
Present_Value	BACnetBinaryPV	INACTIVE (0) / ACTIVE (1)	R	R
Description	CharacterString	-	O	-
Device_Type	CharacterString	-	O	-
Status_Flags	BACnetStatusFlags	{FALSE, FALSE, FALSE, FALSE}	R	R
Event_State	BACnetEventState	STATE_NORMAL (0)	R	R
Reliability	BACnetReliability	NO_FAULT_DETECTED (0)	O	R
Out_Of_Service	BOOLEAN	FALSE	R	R
Polarity	BACnetPolarity	NORMAL (0)	R	R
Inactive_Text	CharacterString	"No Error"	O	R
Active_Text	CharacterString	“Error”	O	R
Change_Of_State_Time	BACnetDatetime	-	O	-
Change_Of_State_Count	Unsigned	-	O	-
Time_Of_State_Count_Reset	BACnetDatetime	-	O	-
Elapsed_Active_Time	Unsigned	-	O	-
Time_Of_Active_Time_Reset	BACnetDatetime	-	O	-
Time_Delay	Unsigned	-	O	-
Notification_Class	Unsigned	-	O	-
Alarm_Value	BACnetBinaryPV	-	O	-
Event_Enable	BACnetEventTransitionBits	-	O	-
Acked_Transitions	BACnetEventTransitionBits	-	O	-
Notify_Type	BACnetNotifyType	-	O	-
Event_Time_Stamps	BACnetArray[N] of BACnetTimeStamp	-	O	-
Profile_Name	CharacterString	-	O	-

© HMS Industrial Networks S.L.U - All rights reserved
This information is subject to change without notice

6.3.43 360_CST_AirFlow_Direction_status (Multistate Input Object Type)

It indicates the current error present in the AC system.

Property Identifier	Property Datatype	Value	ASHRAE	IBOX
Object_Identifier	BACnetObjectIdentifier	(Multi-state Input, 4)	R	R
Object_Name	CharacterString	"360_CST_AirFlow_Direction_status"	R	R
Object_Type	BACnetObjectType	MULTISTATE_INPUT (13)	R	R
Present_Value	Unsigned	1 ~ 4	R	R
Description	CharacterString	-	O	-
Device_Type	CharacterString	-	O	-
Status_Flags	BACnetStatusFlags	{FALSE, FALSE, FALSE, FALSE}	R	R
Event_State	BACnetEventState	STATE_NORMAL (0)	R	R
Reliability	BACnetReliability	NO_FAULT_DETECTED (0)	O	R
Out_Of_Service	BOOLEAN	FALSE	R	R
Number_Of_States	Unsigned	4	R	R
State_Text	BACnetArray[N] of CharacterString	*Check **360_CST_AirFlow_Direction table** below.*	O	R
Time_Delay	Unsigned	-	O	-
Notification_Class	Unsigned	-	O	-
Alarm_Values	List of Unsigned	-	O	-
Fault_Values	List of Unsigned	-	O	-
Event_Enable	BACnetEventTransitionBits	-	O	-
Acked_Transitions	BACnetEventTransitionBits	-	O	-
Notify_Type	BACnetNotifyType	-	O	-
Event_Time_Stamps	BACnetArray[N] of BACnetTimeStamp	-	O	-
Profile_Name	CharacterString	-	O	-

360_CST_AirFlow_Direction values table

Check possible 360_CST_AirFlow_Direction values in the following correspondence table.

Pesent_Value	Contents displayed in State_Text
1	Spot
2	Mid
3	Wide
4	Swing

© HMS Industrial Networks S.L.U - All rights reserved
This information is subject to change without notice

6.3.44 360_CST_AirFlow_Direction_command (Multistate Output Object Type)

It allows control over the horizontal air direction (Left/Right) for the indoor unit.

Property Identifier	Property Datatype	Value	ASHRAE	IBOX
Object_Identifier	BACnetObjectIdentifier	(Multi-state Output, 8)	R	R
Object_Name	CharacterString	“360_CST_AirFlow_Direction_command”	R	R
Object_Type	BACnetObjectType	MULTISTATE_OUTPUT (14)	R	R
Present_Value	Unsigned	1 ~ 4	W	W
Description	CharacterString	-	O	-
Device_Type	CharacterString	-	O	-
Status_Flags	BACnetStatusFlags	{FALSE, FALSE, FALSE, FALSE}	R	R
Event_State	BACnetEventState	STATE_NORMAL (0)	R	R
Reliability	BACnetReliability	NO_FAULT_DETECTED (0)	O	R
Out_Of_Service	BOOLEAN	FALSE	R	R
Number_Of_States	Unsigned	8	R	R
State_Text	BACnetArray[N] of CharacterString	*Check **360_CST_AirFlow_ Direction table** below*	O	R
Priority_Array	BACnetPriorityArray	-	R	R
Relinquish_Default	Unsigned	-	R	R
Time_Delay	Unsigned	-	O	-
Notification_Class	Unsigned	-	O	-
Feedback_Value	Unsigned	-	O	-
Event_Enable	BACnetEventTransitionBits	-	O	-
Acked_Transitions	BACnetEventTransitionBits	-	O	-
Notify_Type	BACnetNotifyType	-	O	-
Event_Time_Stamps	BACnetArray[N] of BACnetTimeStamp	-	O	-
Profile_Name	CharacterString	-	O	-

360_CST_AirFlow_ Direction table

Check possible 360_CST_AirFlow_Direction values in the following correspondence table.

Pesent_Value	Contents displayed in State_Text
1	Spot
2	Mid
3	Wide
4	Swing

© HMS Industrial Networks S.L.U - All rights reserved
This information is subject to change without notice

6.3.45 DualSetpoint_active (Binary Value Object Type)

Enables the DuelSetpoint functionality. Please find more details in section 7.4

Property Identifier	Property Datatype	Value	ASHRAE	IBOX
Object_Identifier	BACnetObjectIdentifier	(Binary Value, 5)	R	R
Object_Name	CharacterString	“UnoccupiedDeadbandAction”	R	R
Object_Type	BACnetObjectType	BINARY_VALUE (5)	R	R
Present_Value	BACnetBinaryPV	INACTIVE (0) / ACTIVE (1)	W	W
Description	CharacterString	-	O	-
Status_Flags	BACnetStatusFlags	{FALSE, FALSE, FALSE, FALSE}	R	R
Event_State	BACnetEventState	STATE_NORMAL (0)	R	R
Reliability	BACnetReliability	NO_FAULT_DETECTED (0)	O	R
Out_Of_Service	BOOLEAN	FALSE	R	R
Inactive_Text	CharacterString	" DualSetpoint not active”	O	R
Active_Text	CharacterString	“DualSetpoint active"	O	R
Change_Of_State_Time	BACnetDatetime	-	O	-
Change_Of_State_Count	Unsigned	-	O	-
Time_Of_State_Count_Reset	BACnetDatetime	-	O	-
Elapsed_Active_Time	Unsigned	-	O	-
Time_Of_Active_Time_Reset	BACnetDatetime	-	O	-
Minimum_Off_Time	Unsigned32	-	O	-
Minimum_On_Time	Unsigned32	-	O	-
Priority_Array	BACnetPriorityArray	BACnetPriorityArray	R	-
Relinquish_Default	BACnetBinaryPV	INACTIVE (0)	R	-
Time_Delay	Unsigned	-	O	-
Notification_Class	Unsigned	-	O	-
Alarm_Value	BACnetBinaryPV	-	O	-
Event_Enable	BACnetEventTransitionBits	-	O	-
Acked_Transitions	BACnetEventTransitionBits	-	O	-
Notify_Type	BACnetNotifyType	-	O	-
Event_Time_Stamps	BACnetArray[N] of BACnetTimeStamp	-	O	-
Profile_Name	CharacterString	-	O	-

© HMS Industrial Networks S.L.U - All rights reserved
This information is subject to change without notice

6.3.46 DualSetpoint_Heat_Temperature_status (Analog Input Object Type)

Inidicates the Dual Setpoint heat temperature of the AC unit.

Property Identifier	Property Datatype	Value	ASHRAE	IBOX
Object_Identifier	BACnetObjectIdentifier	(Analog Input, 21)	R	R
Object_Name	CharacterString	“DualSetpoint_Heat_Temperature_status”	R	R
Object_Type	BACnetObjectType	ANALOG_INPUT (0)	R	R
Present_Value *	REAL	-	R	R
Description	CharacterString	-	O	-
Device_Type	CharacterString	-	O	-
Status_Flags	BACnetStatusFlags	{FALSE, FALSE/TRUE, FALSE, FALSE}	R	R
Event_State	BACnetEventState	STATE_NORMAL (0)	R	R
Reliability	BACnetReliability	NO_FAULT_DETECTED (0), UNRELIABLE_OTHER (7)	O	R
Out_Of_Service	BOOLEAN	FALSE	R	R
Update_Interval	Unsigned	-	O	-
Units *	BACnetEngineeringUnits	-	R	R
Min_Pres_Value *	REAL	-	O	R
Max_Pres_Value *	REAL	-	O	R
Resolution	REAL	-	O	-
COV_Increment	REAL	0	O	W
Time_Delay	Unsigned	-	O	-
Notification_Class	Unsigned	-	O	-
High_Limit	REAL	-	O	-
Low_Limit	REAL	-	O	-
Deadband	REAL	-	O	-
Limit_Enable	BACnetLimitEnable	-	O	-
Event_Enable	BACnetEventTransitionBits	-	O	-
Acked_Transitions	BACnetEventTransitionBits	-	O	-
Notify_Type	BACnetNotifyType	-	O	-
Event_Time_Stamps	BACnetArray[N] of BACnetTimeStamp	-	O	-
Profile_Name	CharacterString	-	O	-

© HMS Industrial Networks S.L.U - All rights reserved
This information is subject to change without notice

6.3.47 DualSetpoint_Cool_Temperature_status (Analog Input Object Type)

Inidicates the Dual Setpoint cool temperature of the AC unit.

Property Identifier	Property Datatype	Value	ASHRAE	IBOX
Object_Identifier	BACnetObjectIdentifier	(Analog Input, 22)	R	R
Object_Name	CharacterString	“DualSetpoint_Cool_Temperature_status”	R	R
Object_Type	BACnetObjectType	ANALOG_INPUT (0)	R	R
Present_Value *	REAL	-	R	R
Description	CharacterString	-	O	-
Device_Type	CharacterString	-	O	-
Status_Flags	BACnetStatusFlags	{FALSE, FALSE/TRUE, FALSE, FALSE}	R	R
Event_State	BACnetEventState	STATE_NORMAL (0)	R	R
Reliability	BACnetReliability	NO_FAULT_DETECTED (0), UNRELIABLE_OTHER (7)	O	R
Out_Of_Service	BOOLEAN	FALSE	R	R
Update_Interval	Unsigned	-	O	-
Units *	BACnetEngineeringUnits	-	R	R
Min_Pres_Value *	REAL	-	O	R
Max_Pres_Value *	REAL	-	O	R
Resolution	REAL	-	O	-
COV_Increment	REAL	0	O	W
Time_Delay	Unsigned	-	O	-
Notification_Class	Unsigned	-	O	-
High_Limit	REAL	-	O	-
Low_Limit	REAL	-	O	-
Deadband	REAL	-	O	-
Limit_Enable	BACnetLimitEnable	-	O	-
Event_Enable	BACnetEventTransitionBits	-	O	-
Acked_Transitions	BACnetEventTransitionBits	-	O	-
Notify_Type	BACnetNotifyType	-	O	-
Event_Time_Stamps	BACnetArray[N] of BACnetTimeStamp	-	O	-
Profile_Name	CharacterString	-	O	-

© HMS Industrial Networks S.L.U - All rights reserved
This information is subject to change without notice

6.3.48 DualSetpoint_Heat_Temperature_command (Analog Input Object Type)

It conrols the current Dualsetpoint heat temperature in the indoor unit.

Property Identifier	Property Datatype	Value	ASHRAE	IBOX
Object_Identifier	BACnetObjectIdentifier	(Analog Input, 3)	R	R
Object_Name	CharacterString	“DualSetpoint_Heat_Temperature_command”	R	R
Object_Type	BACnetObjectType	ANALOG_INPUT (0)	R	R
Present_Value	REAL	16…30 ºC 60…86 ºF	R	R
Description	CharacterString	-	O	-
Device_Type	CharacterString	-	O	-
Status_Flags	BACnetStatusFlags	{FALSE, FALSE/TRUE, FALSE, FALSE}	R	R
Event_State	BACnetEventState	STATE_NORMAL (0)	R	R
Reliability	BACnetReliability	NO_FAULT_DETECTED (0), UNRELIABLE_OTHER (7)	O	R
Out_Of_Service	BOOLEAN	FALSE	R	R
Update_Interval	Unsigned	-	O	-
Units **	BACnetEngineeringUnits	Degrees Celsius (62), Degrees Fahrenheit (64)	R	R
Min_Pres_Value	REAL	16 ºC // 60 ºF	O	R
Max_Pres_Value	REAL	32 ºC // 90 ºF	O	R
Resolution	REAL	-	O	-
COV_Increment	REAL	0	O	W
Time_Delay	Unsigned	-	O	-
Notification_Class	Unsigned	-	O	-
High_Limit	REAL	-	O	-
Low_Limit	REAL	-	O	-
Deadband	REAL	-	O	-
Limit_Enable	BACnetLimitEnable	-	O	-
Event_Enable	BACnetEventTransitionBits	-	O	-
Acked_Transitions	BACnetEventTransitionBits	-	O	-
Notify_Type	BACnetNotifyType	-	O	-
Event_Time_Stamps	BACnetArray[N] of BACnetTimeStamp	-	O	-
Profile_Name	CharacterString	-	O	-

** Use of Celsius or Fahrenheits units can be selected throught the switch configuration. Check section 2.2 for more information.

© HMS Industrial Networks S.L.U - All rights reserved
This information is subject to change without notice

6.3.49 DualSetpoint_Cool_Temperature_command (Analog Input Object Type)

It controls the current Dualsetpoint cool temperature in the indoor unit.

Property Identifier	Property Datatype	Value	ASHRAE	IBOX
Object_Identifier	BACnetObjectIdentifier	(Analog Input, 4)	R	R
Object_Name	CharacterString	“DualSetpoint_Cool_Temperature_command”	R	R
Object_Type	BACnetObjectType	ANALOG_INPUT (0)	R	R
Present_Value	REAL	16…30 ºC 60…86 ºF	R	R
Description	CharacterString	-	O	-
Device_Type	CharacterString	-	O	-
Status_Flags	BACnetStatusFlags	{FALSE, FALSE/TRUE, FALSE, FALSE}	R	R
Event_State	BACnetEventState	STATE_NORMAL (0)	R	R
Reliability	BACnetReliability	NO_FAULT_DETECTED (0), UNRELIABLE_OTHER (7)	O	R
Out_Of_Service	BOOLEAN	FALSE	R	R
Update_Interval	Unsigned	-	O	-
Units **	BACnetEngineeringUnits	Degrees Celsius (62), Degrees Fahrenheit (64)	R	R
Min_Pres_Value	REAL	16 ºC // 60 ºF	O	R
Max_Pres_Value	REAL	32 ºC // 90 ºF	O	R
Resolution	REAL	-	O	-
COV_Increment	REAL	0	O	W
Time_Delay	Unsigned	-	O	-
Notification_Class	Unsigned	-	O	-
High_Limit	REAL	-	O	-
Low_Limit	REAL	-	O	-
Deadband	REAL	-	O	-
Limit_Enable	BACnetLimitEnable	-	O	-
Event_Enable	BACnetEventTransitionBits	-	O	-
Acked_Transitions	BACnetEventTransitionBits	-	O	-
Notify_Type	BACnetNotifyType	-	O	-
Event_Time_Stamps	BACnetArray[N] of BACnetTimeStamp	-	O	-
Profile_Name	CharacterString	-	O	-

** Use of Celsius or Fahrenheits units can be selected throught the switch configuration. Check section 2.2 for more information.

© HMS Industrial Networks S.L.U - All rights reserved
This information is subject to change without notice

7 Set-up process and troubleshooting

7.1 *Pre-requisites*

In a BACnet MS/TP integration, it is necessary to have the BACnet MS/TP Master device operative and well connected to the BACnet MS/TP port of the INBACSAM001R100.

Items supplied by HMS Networks for this integration are:

- Intesis INBACSAM001R100 interface with Samsung AC external protocol firmware loaded.
- Specific connection cable to connect Samsung AC unit with INBACSAM001R100 gateway.
- MiniUSB cable for console communication and testing power supply usage.
- Product documentation.

7.2 *Physical checking*

First point to look at to make sure that gateway is working properly is to check physical connections:

1.- Make sure that the cables are correctly connected between the AC unit's remote controller bus and the gateway INBACSAM001R100.

2.- Check that the AC unit is connected to mains supply.

3.- Check the EIA485/RS485 connection from the gateway to the BACnet MS/TP. Remember to verify polarity and terminal resistors configuration.

7.3 *Occupancy*

Occupancy function is used to determine how the Air Conditioner unit will be set depending on the presence or absence of people in the room. Remember that the occupancy signal needs to be fed by an external sensor which indicates if there is presense or not (occupancy). This signal is processed directly in the Intesis and modifies 3 parameters from the AC system: Setpoint, Mode and On/Off.

In order to adjust the settings to the current mode (Heat or Cool), the gateway offers 6 different BACnet objects:

- OccupiedCoolSetPoint
- OccupiedHeatSetPoint
- UnoccupiedCoolSetPoint
- UnoccupiedHeatSetPoint
- OccupancyContinousCheck
- UnoccupiedDeadbandAction

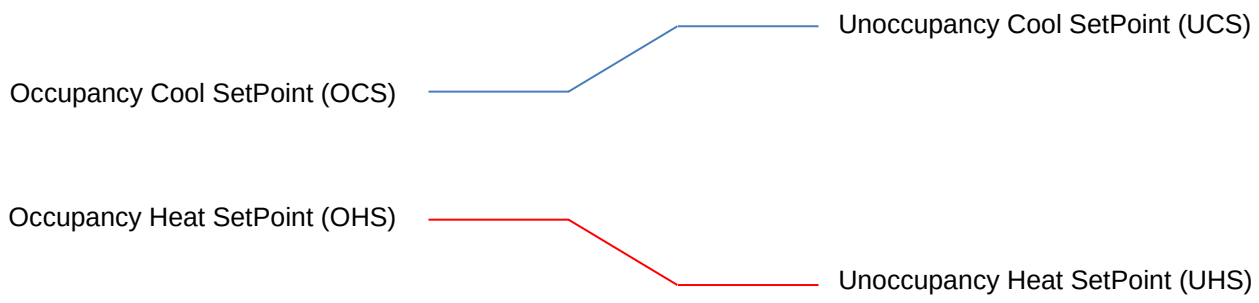

***Occupancy/Unoccupancy Cool Setpoint (OCS/UCS)*:** Default value for setpoint temperature to be set when Occupancy/Unoccupancy is enabled and current mode is cool. UCS must always be greater or equal to OCS. Difference between OCS and OHS must be greater or equal to 2ºC/4ºF.

***Occupancy/Unoccupancy Heat Setpoint (OHS/UHS)*:** Default value for setpoint temperature to be set when Occupancy/Unoccupancy is enabled and current mode is heat. UHS must always be smaller or equal to OHS. Difference between OCS and OHS must be greater or equal to 2ºC/4ºF.

© HMS Industrial Networks S.L.U - All rights reserved
This information is subject to change without notice

Occupancy Continous check: This checkbox is used to determine if the gateway will check the occupancy conditions constantly (check) or not (unchecked) by default. That means that with the the checkbox active, conditions are checked on each change of the temperature too, while if unchecked, this is only checked when the occupancy status changes.

Unoccupied Deadband Action: This determines the action to be taken while the ambient temperature is in between the deadband. If unchecked, indoor unit will turn off and if checked it will remain on.

When **occupancy mode is active** (there is presence in the room), according to current room temperature, **mode**, **setpoint** and **on/off** will be set to:

Condition	Setpoint	Mode	On/Off
Room temperature > OCS	Current OCS value	Cool	On
Room temperature < OHS	Current OHS value	Heat	On
OCS < Room temperature > OHS	OCS/OHS depending on current mode (If Fan or Dry mode is active, no setpoint is sent)	Current mode	On

When **unoccupancy mode is active** (there is no presence in the room), according to current room temperature, **mode**, **setpoint** and **on/off** will be set to:

Condition	Setpoint	Mode	On/Off
Room temperature > OCS	Current UCS value	Cool	On
Room temperature < OHS	Current UHS value	Heat	On
OCS < Room temperature > OHS	UCS/UHS depending on current mode (If Fan or Dry mode is active, no setpoint is sent)	Current mode	On (Deadband action =1)
			Off (Deadband action =0)

These checks will be done each time the indoor unit occupancy status is changed, and if ***check continuously*** checkbox is checked, also each time the room temperature changes.

The configuration set on the occupany signals is applied from the very first moment the occupancy signal is enabled until the user changes the setpoint, mode or the On/Off signal, which disables occupancy functionality.

7.4 *Dual Setpoint objects*

When activating the Dual Setpoint from the Intesis-Gateway, the visualization mode on the remote controller will not change. If the remote controller is visualizing in normal mode, it will show the average value between DSP heat temperature and DSP cool temperature.
For changing to DualSetpoint visualisation, please set the Remote controller via its configuration to DSP-Mode.

Warning! Dual SetPoint must be activated to be available. The gateway does not read out if DualSetPoint is activated.

© HMS Industrial Networks S.L.U - All rights reserved
This information is subject to change without notice

8 AC Unit Types compatibility

Please, check in our compatibility tool to know which Samsung units are compatible with our gateway.

https://compatibility.intesis.com/

9 Technical specs

Enclosure	Plastic, type PC (UL 94 V-0). Dimensions: 93mm x 53mm x 58mm. Weight: 85 g
Color	Light Grey. RAL 7035.
Terminal wiring (for power supply and low-voltage signals)	Per terminal: solid wires or stranded wires (twisted or with ferrule) 1 core: 0.5 … 2.5mm^2 2 cores: 0.5 … 1.5mm^2
Mounting	Wall. DIN rail EN60715 TH35.
BACnet MS/TP port	1 x EIA485/RS485 Plug-in screw terminal block (2 poles + Signal GND)
LED indicators	2 x Gateway/Communication status
Operational temperature	0°C to +40°C
Operational humidity	5% to 95%, non-condensing
Isolation Voltage	*4000 VDC (between AC unit and EIA-485/RS-485)*
Protection	IP20 (IEC60529).

9.1 *Dimensions*

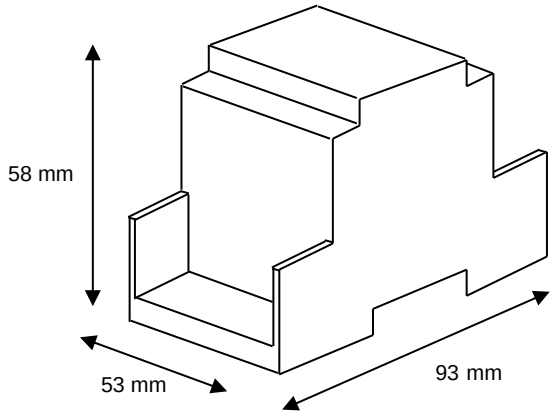

© HMS Industrial Networks S.L.U - All rights reserved
This information is subject to change without notice

10 Binary table for MAC address configuration

SW2								MAC Address / Description
1	2	3	4	5	6	7	8	
↓	↓	↓	↓	↓	↓	↓	x	0 (Default value)
↑	↓	↓	↓	↓	↓	↓	x	1
↓	↑	↓	↓	↓	↓	↓	x	2
↑	↑	↓	↓	↓	↓	↓	x	3
↓	↓	↑	↓	↓	↓	↓	x	4
↑	↓	↑	↓	↓	↓	↓	x	5
↓	↑	↑	↓	↓	↓	↓	x	6
↑	↑	↑	↓	↓	↓	↓	x	7
↓	↓	↓	↑	↓	↓	↓	x	8
↑	↓	↓	↑	↓	↓	↓	x	9
↓	↑	↓	↑	↓	↓	↓	x	10
↑	↑	↓	↑	↓	↓	↓	x	11
↓	↓	↑	↑	↓	↓	↓	x	12
↑	↓	↑	↑	↓	↓	↓	x	13
↓	↑	↑	↑	↓	↓	↓	x	14
↑	↑	↑	↑	↓	↓	↓	x	15
↓	↓	↓	↓	↑	↓	↓	x	16
↑	↓	↓	↓	↑	↓	↓	x	17
↓	↑	↓	↓	↑	↓	↓	x	18
↑	↑	↓	↓	↑	↓	↓	x	19
↓	↓	↑	↓	↑	↓	↓	x	20
↑	↓	↑	↓	↑	↓	↓	x	21
↓	↑	↑	↓	↑	↓	↓	x	22
↑	↑	↑	↓	↑	↓	↓	x	23
↓	↓	↓	↑	↑	↓	↓	x	24
↑	↓	↓	↑	↑	↓	↓	x	25
↓	↑	↓	↑	↑	↓	↓	x	26
↑	↑	↓	↑	↑	↓	↓	x	27
↓	↓	↑	↑	↑	↓	↓	x	28
↑	↓	↑	↑	↑	↓	↓	x	29
↓	↑	↑	↑	↑	↓	↓	x	30
↑	↑	↑	↑	↑	↓	↓	x	31
↓	↓	↓	↓	↓	↑	↓	x	32
↑	↓	↓	↓	↓	↑	↓	x	33
↓	↑	↓	↓	↓	↑	↓	x	34
↑	↑	↓	↓	↓	↑	↓	x	34
↓	↓	↑	↓	↓	↑	↓	x	35
↑	↓	↑	↓	↓	↑	↓	x	36
↓	↑	↑	↓	↓	↑	↓	x	37
↑	↑	↑	↓	↓	↑	↓	x	38
↓	↓	↓	↑	↓	↑	↓	x	39
↑	↓	↓	↑	↓	↑	↓	x	40
↓	↑	↓	↑	↓	↑	↓	x	41
↑	↑	↓	↑	↓	↑	↓	x	42
↓	↓	↑	↑	↓	↑	↓	x	43
↑	↓	↑	↑	↓	↑	↓	x	45
↓	↑	↑	↑	↓	↑	↓	x	46
↑	↑	↑	↑	↓	↑	↓	x	47
↓	↓	↓	↓	↑	↑	↓	x	48
↑	↓	↓	↓	↑	↑	↓	x	49
↓	↑	↓	↓	↑	↑	↓	x	50
↑	↑	↓	↓	↑	↑	↓	x	51
↓	↓	↑	↓	↑	↑	↓	x	52
↑	↓	↑	↓	↑	↑	↓	x	53
↓	↑	↑	↓	↑	↑	↓	x	54
↑	↑	↑	↓	↑	↑	↓	x	55
↓	↓	↓	↑	↑	↑	↓	x	56
↑	↓	↓	↑	↑	↑	↓	x	57
↓	↑	↓	↑	↑	↑	↓	x	58
↑	↑	↓	↑	↑	↑	↓	x	59
↓	↓	↑	↑	↑	↑	↓	x	60
↑	↓	↑	↑	↑	↑	↓	x	61
↓	↑	↑	↑	↑	↑	↓	x	62
↑	↑	↑	↑	↑	↑	↓	x	63

SW2								MAC Address / Description
1	2	3	4	5	6	7	8	
↓	↓	↓	↓	↓	↓	↑	x	64
↑	↓	↓	↓	↓	↓	↑	x	65
↓	↑	↓	↓	↓	↓	↑	x	66
↑	↑	↓	↓	↓	↓	↑	x	67
↓	↓	↑	↓	↓	↓	↑	x	68
↑	↓	↑	↓	↓	↓	↑	x	69
↓	↑	↑	↓	↓	↓	↑	x	70
↑	↑	↑	↓	↓	↓	↑	x	71
↓	↓	↓	↑	↓	↓	↑	x	72
↑	↓	↓	↑	↓	↓	↑	x	73
↓	↑	↓	↑	↓	↓	↑	x	74
↑	↑	↓	↑	↓	↓	↑	x	75
↓	↓	↑	↑	↓	↓	↑	x	76
↑	↓	↑	↑	↓	↓	↑	x	77
↓	↑	↑	↑	↓	↓	↑	x	78
↑	↑	↑	↑	↓	↓	↑	x	79
↓	↓	↓	↓	↑	↓	↑	x	80
↑	↓	↓	↓	↑	↓	↑	x	81
↓	↑	↓	↓	↑	↓	↑	x	82
↑	↑	↓	↓	↑	↓	↑	x	83
↓	↓	↑	↓	↑	↓	↑	x	84
↑	↓	↑	↓	↑	↓	↑	x	85
↓	↑	↑	↓	↑	↓	↑	x	86
↑	↑	↑	↓	↑	↓	↑	x	87
↓	↓	↓	↑	↑	↓	↑	x	88
↑	↓	↓	↑	↑	↓	↑	x	89
↓	↑	↓	↑	↑	↓	↑	x	90
↑	↑	↓	↑	↑	↓	↑	x	91
↓	↓	↑	↑	↑	↓	↑	x	92
↑	↓	↑	↑	↑	↓	↑	x	93
↓	↑	↑	↑	↑	↓	↑	x	94
↑	↑	↑	↑	↑	↓	↑	x	95
↓	↓	↓	↓	↓	↑	↑	x	96
↑	↓	↓	↓	↓	↑	↑	x	97
↓	↑	↓	↓	↓	↑	↑	x	98
↑	↑	↓	↓	↓	↑	↑	x	99
↓	↓	↑	↓	↓	↑	↑	x	100
↑	↓	↑	↓	↓	↑	↑	x	101
↓	↑	↑	↓	↓	↑	↑	x	102
↑	↑	↑	↓	↓	↑	↑	x	103
↓	↓	↓	↑	↓	↑	↑	x	104
↑	↓	↓	↑	↓	↑	↑	x	105
↓	↑	↓	↑	↓	↑	↑	x	106
↑	↑	↓	↑	↓	↑	↑	x	107
↓	↓	↑	↑	↓	↑	↑	x	108
↑	↓	↑	↑	↓	↑	↑	x	109
↓	↑	↑	↑	↓	↑	↑	x	110
↑	↑	↑	↑	↓	↑	↑	x	111
↓	↓	↓	↓	↑	↑	↑	x	112
↑	↓	↓	↓	↑	↑	↑	x	113
↓	↑	↓	↓	↑	↑	↑	x	114
↑	↑	↓	↓	↑	↑	↑	x	115
↓	↓	↑	↓	↑	↑	↑	x	116
↑	↓	↑	↓	↑	↑	↑	x	117
↓	↑	↑	↓	↑	↑	↑	x	118
↑	↑	↑	↓	↑	↑	↑	x	119
↓	↓	↓	↑	↑	↑	↑	x	120
↑	↓	↓	↑	↑	↑	↑	x	121
↓	↑	↓	↑	↑	↑	↑	x	122
↑	↑	↓	↑	↑	↑	↑	x	123
↓	↓	↑	↑	↑	↑	↑	x	124
↑	↓	↑	↑	↑	↑	↑	x	125
↓	↑	↑	↑	↑	↑	↑	x	126
↑	↑	↑	↑	↑	↑	↑	x	127

© HMS Industrial Networks S.L.U - All rights reserved
This information is subject to change without notice

11 Error codes

Error codes from Samsung air conditioning system.

ErrorCodeM	Error in RC	Error Category	Error Description
0	N/A	INMBSSAM001R100	No active error
101	101	Communication error	Indoor unit communication error
102	102	Communication error	Indoor unit/outdoor unit communication time-out error; errors in more than 6 packets.
121	121	Indoor sensor error	Indoor temperature sensor (open/short).
122	122	Indoor sensor error	Indoor unit evaporator-in sensor (open/short)
128	128	Indoor sensor error	Indoor unit evaporator-in disconnection. (sensor displacement)
129	129	Indoor sensor error	Indoor unit evaporator-out separation.
153	153	Drain diagnostic error	Indoor floating switch secondary detection
201	201	Configuration error	Unit Miss Match indoor/outdoor
202	202	Communication error	Indoor/outdoor communication error (1 min)
203	203	Communication error	Comm. error between indoor/outdoor INV<>MAIN MICOM (1 min)
221	221	Outdoor sensor error	Outdoor temperature sensor error
231	231	Outdoor sensor error	Condenser temperature sensor error
237	237	Outdoor sensor error	Condenser temperature error
251	251	Outdoor sensor error	Inverter Emission temperature sensor error
320	320	Outdoor sensor error	OPL sensor error
402	402	Outdoor sensor error	Detection of outdoor freezing when compressor stop
404	404	Outdoor unit error	Overload Protection of Outdoor when compressor stop
419	419	Control error	EEV Open error (Electronic Evaporation Valve)
422	422	Control error	EEV Close error
425	425	Installation error	Power Cable Miss connection
440	440	Self-diagnostic error	Heating operation blocked
441	441	Self-diagnostic error	Cooling operation blocked
461	461	ODU protection error	Inverter Compressor startup error
462	462	ODU protection error	Inverter total current error / PFC over current error
463	463	ODU protection error	OLP Heat Sink error
464	464	ODU protection error	Inverter IPM over current error
465	465	ODU protection error	Compressor V limit error
466	466	ODU protection error	DC LINK over/low voltage error
467	467	ODU protection error	Inverter compressor rotation error
468	468	ODU protection error	Inverter current sensor error
469	469	ODU protection error	Inverter DC LINK voltage sensor error
471	471	ODU protection error	Inverter OTP error / Inverter EEPROM read/write error
472	472	ODU protection error	AC Zero crossing signal out error
473	473	ODU protection error	Compressor Lock error
474	474	ODU protection error	Heat Sink sensor error
475	475	Self-diagnostic error	Outdoor Fan 2 error
484	484	ODU protection error	PFC Overload error
485	485	ODU protection error	Input current sensor error
500	500	ODU protection error	Heat Sink Over Heat error
554	554	Self-diagnostic error	Gas leak detector
556	556	Configuration error	Outdoor unit Capacity Setup option error
557	557	Configuration error	Option Code Miss match indoor units
601	601	Communication error	Communication error between wired remote and indoor unit. (When communication has stopped for 3 minutes after detecting indoor unit and wired remote control)
602	602	Communication error	Communication error between the Master and Slave wired remote controller. (Only one Master and one Slave can exist).
604	604	Communication error	Tracking 10 or more errors between wired remote control and indoor unit.

© HMS Industrial Networks S.L.U - All rights reserved
This information is subject to change without notice

606	606	Installation error	-COM1, Com2 crossing connection error. -When wired remote is connected to indoor unit COM1 (F1, F2) terminals.
607	607	Configuration error	-Multiple Master error. (When using Master remote control). -Error occurs when two wired remotes are both set as Master in one COM line.
609	609	Configuration error	Indoor unit is not installed. (when the indoor unit is not detected after outside gearing option setting and tracking are finished). In case of using outside gear control.
618	618	Configuration error	-Exceeded maximum no. of installation for indoor units. -A reset is required after checking the number of indoor unit.
619	619	Configuration error	-Mixed installations for °C/F° indoor unit. (Only detected on master wired remote control). -Error occurs when mixed indoor units of °C and °F settings are installed.
620	620	Configuration error	-Wired remote control °C/°F setting error. -This error occurs if the indoor unit is set in °C while the wired remote is set in °F or vice versa.
621	621	Configuration error	This error occurs when the option setting of the Master and Slave wired remote controls are different from each other.
627	627	Configuration error	Slave wired remote control installation error (when two Slave wired remote controls are installed).
EA	EA	Configuration error	Wired remote controller COM2 option setting error.
65535 (-1)	N/A	INMBSSAM001R100	Error in the communication of INMBSSAM001R100 with the AC unit.

Should you detect an unlisted error code, please contact Samsung technical support.

© HMS Industrial Networks S.L.U - All rights reserved
This information is subject to change without notice