ENGLISH

KNX TP Gateway for Mitsubishi Electric Air Conditioners

COMPATIBLE WITH DOMESTIC, MR. SLIM, CITY MULTI, AND LOSSNAY LINES COMMERCIALIZED BY MITSUBISHI ELECTRIC (APPLICATION'S PROGRAM VERSION 1.2)

USER MANUAL
Version 1.0.0
Publication date 2024-06-17

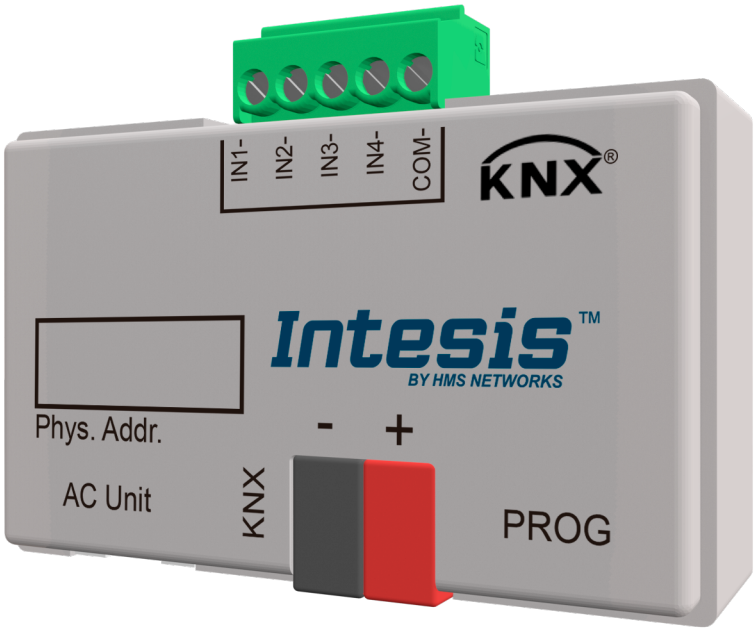

14 rue Edouard Petit
42000 St-Etienne
Tel : +33 477 92 03 56
Email : contact@rg2i.com
www.rg2i.com

Copyright © 2023 Intesis

Disclaimer

The information in this document is for informational purposes only. Please inform HMS Networks of any inaccuracies or omissions found in this document. HMS Networks disclaims any responsibility or liability for any errors that may appear in this document.

HMS Networks reserves the right to modify its products in line with its policy of continuous product development. The information in this document shall therefore not be construed as a commitment on the part of HMS Networks and is subject to change without notice. HMS Networks makes no commitment to update or keep current the information in this document.

The data, examples and illustrations found in this document are included for illustrative purposes and are only intended to help improve understanding of the functionality and handling of the product. In view of the wide range of possible applications of the product, and because of the many variables and requirements associated with any particular implementation, HMS Networks cannot assume responsibility or liability for actual use based on the data, examples or illustrations included in this document nor for any damages incurred during installation of the product. Those responsible for the use of the product must acquire sufficient knowledge in order to ensure that the product is used correctly in their specific application and that the application meets all performance and safety requirements including any applicable laws, regulations, codes and standards. Further, HMS Networks will under no circumstances assume liability or responsibility for any problems that may arise as a result from the use of undocumented features or functional side effects found outside the documented scope of the product. The effects caused by any direct or indirect use of such aspects of the product are undefined and may include e.g. compatibility issues and stability issues.

Table of Contents

1. Description, Compatible AC systems, and Order Codes 1

2. General Information 2
2.1. Intended Use of the User Manual 2
2.2. General Safety Information 2
2.3. Admonition Messages and Symbols 2

3. Overview 4
3.1. Inside the Package 4
3.2. Main Features 4
3.3. General Functionality 5
3.4. Gateway Capacity 5
3.5. Quickstart Guide 5

4. Hardware 6
4.1. Gateway Layout 6
4.2. Mounting 6
4.3. Connections 7
4.3.1. Connection to the AC Unit 7
4.3.2. Connection to the KNX Bus 7
4.4. LED Indicators 8
4.5. Push Button 8
4.6. Technical Specifications 9
4.7. Dimensions 9

5. Configuration 10
5.1. ETS Parameters 10
5.1.1. General 11
5.1.1.1. Type of Unit 11
5.1.1.2. Disallow Control from Remote Controller 11
5.1.1.3. Scene to Load on Bus Recovery/Startup 12
5.1.1.4. Enable the "Control_ Lock Control Obj" Object 12
5.1.1.5. Send READs for Control_ Objects on Bus Recovery 12
5.1.1.6. Enable "Operating Hour Counter" Object 12
5.1.1.7. Enable the "Error Code [2byte]" Object 13
5.1.1.8. Enable the "Error Text Code [14byte]" Object 13

6. Configuration Parameters for Type of Unit: AC Unit 14
6.1. AC Mode Configuration 14
6.1.1. The Indoor Unit Has FAN Mode 14
6.1.2. Enable "Mode Cool/Heat" Objects 14
6.1.3. Enable the "PID-Compat. Scalling Mode" Objects 14
6.1.4. Enable Use of the "Mode +/-" Object 15
6.1.5. Enable Use of the Bit-type Mode Objects (for Control) 15
6.1.6. Enable Use of the Bit-type Mode Objects (for Status) 15
6.1.7. Enable Use of Text Object for Mode 16
6.1.8. Enable Use of Legacy_ Object for Mode 16
6.2. Special Modes Configuration 16
6.2.1. Enable Use of POWER Mode 16
6.2.2. Enable Use of the Economy Mode 17
6.2.3. Enable Use of the Additional Heating Mode 18
6.2.4. Enable Use of the Additional Cooling Mode 18
6.3. Fan Speed Configuration (AC Units) 19

6.3.1. Fan is Accessible in Indoor Unit 19
6.3.2. Available Fan Speeds in the Indoor Unit 19
6.3.3. The Indoor Unit Has AUTO Fan Speed 20
6.3.4. DPT Object Type for Fan Speed 20
6.3.5. Enable Use of Bit-type Fan Speed Objects (for Control) 21
6.3.6. Enable Use of the Bit-type Fan Speed Objects (for Status) 21
6.3.7. Enable Use of the "Fan Speed +/-" Object 21
6.3.8. Enable Use of Text Object for Fan Speed 22
6.3.9. Enable Use of Legacy_ Object for Fan Speed 22
6.4. Vane Up-Down Configuration 22
6.4.1. The Indoor Unit Has U-D Vanes 22
6.4.2. Available Vane Positions in the Indoor Unit 22
6.4.3. Indoor Unit Has AUTO Vanes U-D 23
6.4.4. Indoor Unit Has SWING Vanes U-D 23
6.4.5. DPT Object Type for Vanes Up-Down 23
6.4.6. Enable Use of Bit-type Vanes U-D Objects (for Control) 24
6.4.7. Enable Use of Bit-type Vanes U-D Objects (for Status) 24
6.4.8. Enable Use of the "Vanes U-D +/-" Object 24
6.4.9. Enable "Vanes U-D Man/Auto" Objects (for Control and Status) 25
6.4.10. Enable the “Vanes U-D Swing” Objects (for Control and Status) 25
6.4.11. Enable Use of Text Object for Vanes U-D 25
6.4.12. Enable Use of Legacy_ for Vanes 26
6.5. Vane Left-Right Configuration 26
6.5.1. Indoor Unit Has L-R Vanes 26
6.5.2. Available Positions in Indoor Unit 26
6.5.3. Indoor Unit Has SWING Vanes L-R 26
6.5.4. DPT Object Type for Vanes Left-Right 26
6.5.5. Enable Use of Bit-type Vanes L-R Objects (for Control) 27
6.5.6. Enable Use of Bit-type Vanes L-R Objects (for Status) 27
6.5.7. Enable Use of +/- Object for Vanes L-R 27
6.5.8. Enable "Vanes L-R Swing" Objects (for Control and Status) 28
6.5.9. Enable Use of Text Objects for Vanes L-R 28
6.6. Temperature Configuration 29
6.6.1. Periodic Sending of "Status_ AC Setp" 29
6.6.2. Transmission of "Status_ AC Return Temp" 29
6.6.3. Enable Use of +/- Obj for Setpoint Temp 29
6.6.4. Enable Limits on Control_ Setpoint Obj 29
6.6.5. Ambient Temp. Ref. is Provided from KNX 30
6.7. Scene Configuration (AC Units) 30
6.7.1. Enable Use of Scenes 30
6.7.2. Scenes Can Be Stored from KNX Bus 31
6.7.3. Enable Use of Bit Objects for Scene Execution 31
6.7.4. Scene n Preset (AC Units) 31
6.8. Occupancy and Switch-Off Timeouts Configuration 33
6.8.1. Enable Use of Open Window / Switch Off Timeout Function 33
6.8.2. Enable Use of Occupancy Function 34
6.8.3. Enable Use of Sleep Function 35
6.9. Binary Inputs Configuration 36
6.9.1. Enable Use of Input 1, 2, 3, and 4 36
6.9.2. Contact Type 36
6.9.3. Debounce Time 36
6.9.4. Disabling Function 37
6.9.5. Function 37
6.9.5.1. Function: Switching 37
6.9.5.2. Function: Dimming 38

6.9.5.3. Function: Shutter/Blind 39
6.9.5.4. Function: Value 40
6.9.5.5. Function: Execute Scene 1 (Internal) 41
6.9.5.6. Function: Occupancy (Internal) 41
6.9.5.7. Function: Window Contact (Internal) 41

7. Configuration Parameters for Type of Unit: LOSSNAY Unit 42
7.1. Lossnay Ventilation Mode Configuration 42
7.1.1. Enable Use of Bit-type Ventilation Mode Objects (for Control) 42
7.1.2. Enable Use of Bit-type Ventilation Mode Objects (for Status) 42
7.1.3. Enable Use of +/- Object for Ventilation Mode 42
7.1.4. Enable Use of Text Object for Ventilation Mode 43
7.2. Lossnay Fan Speed Configuration 43
7.2.1. Fan is Accessible in Lossnay Unit 43
7.2.2. Available Fanspeeds in Lossnay Unit 43
7.2.3. DPT Object Type for Fanspeed 43
7.2.4. Enable Use of Bit-type Fan Speed Objects (for Control) 44
7.2.5. Enable Use of Bit-type Fan Speed Objects (for Status) 44
7.2.6. Enable Use of +/- Object for Fan Speed 44
7.2.7. Enable Use of Text Object for Fan Speed 45
7.3. Scene Configuration (Lossnay Units) 45
7.3.1. Enable Use of Scenes 45
7.3.2. Scenes can be Stored from KNX Bus 45
7.3.3. Enable Use of Bit Objects for Scene Execution 46
7.3.4. Scene n Preset (Lossnay Units) 46
7.4. Occupancy and Switch-Off Timeouts Configuration for Lossnay 47
7.5. Binary Inputs Configuration for Lossnay 47

8. Communication Objects 48

9. Error Codes 55

1. Description, Compatible AC systems, and Order Codes

KNX TP Gateway for Mitsubishi Electric Air Conditioners.
Compatible with domestic, Mr. Slim, City Multi, and Lossnay lines commercialized by Mitsubishi Electric.

Use the compatibility tool to get a complete list of compatible AC units: https://compatibility.intesis.com/#

ORDER CODE	LEGACY ORDER CODE
INKNXMIT001I100	ME-AC-KNX-1i

2. General Information

2.1. Intended Use of the User Manual

This manual contains the main features of this Intesis gateway and the instructions for its appropriate installation, configuration, and operation.

The contents of this manual should be brought to the attention of any person who installs, configures, or operates this gateway or any associated equipment.

Keep this manual for future reference during the installation, configuration, and operation.

2.2. General Safety Information

IMPORTANT
Follow these instructions carefully. Improper work may seriously harm your health and damage the gateway and/or any other equipment connected to it.

Only technical personnel, following these instructions and the country legislation for installing electrical equipment, can install and manipulate this gateway.

Install this gateway indoors, in a restricted access location, avoiding exposure to direct solar radiation, water, high relative humidity, or dust.

Preferably, mount this gateway on a DIN rail inside a grounded metallic cabinet, following the instructions in this manual.

If mounting on a wall, firmly fix this gateway on a non-vibrating surface, following the instructions in this manual.

All wires (for communication and power supply, if needed) must only be connected to networks with indoor wiring. All communication ports are considered for indoor use and must only be connected to SELV circuits.

Disconnect all systems from power before manipulating and connecting them to the gateway.

Respect the expected polarity of power and communication cables when connecting them to the gateway.

This Intesis gateway is designed for installation in an enclosure. When the device is mounted outside an enclosure, precautions should be taken to avoid electrostatic discharges to the unit in environments with static levels above 4 kV. When working in an enclosure (e.g., making adjustments, setting switches, etc.), typical anti-static precautions should be observed before touching the unit.

Binary inputs, if present, are potential-free contact. Do not connect any voltage.

Safety instructions in other languages can be found here.

2.3. Admonition Messages and Symbols

DANGER
Instructions that must be followed to avoid an imminently hazardous situation that, if not avoided, will result in death or severe injury.

WARNING
Instructions that must be followed to avoid a potentially hazardous situation that, if not avoided, could result in death or severe injury.

CAUTION
Instruction that must be followed to avoid a potentially hazardous situation that, if not avoided, could result in minor or moderate injury.

IMPORTANT
Instruction that must be followed to avoid a risk of reduced functionality and/or damage to the equipment or to avoid a network security risk.

NOTE
Additional information which may facilitate installation and/or operation.

TIP
Helpful advice and suggestions.

NOTICE
Remarkable Information.

3. Overview

Figure 1. Integration of Mitsubishi Electric AC units into a KNX TP installation using the Intesis INKNXMIT001I100 gateway

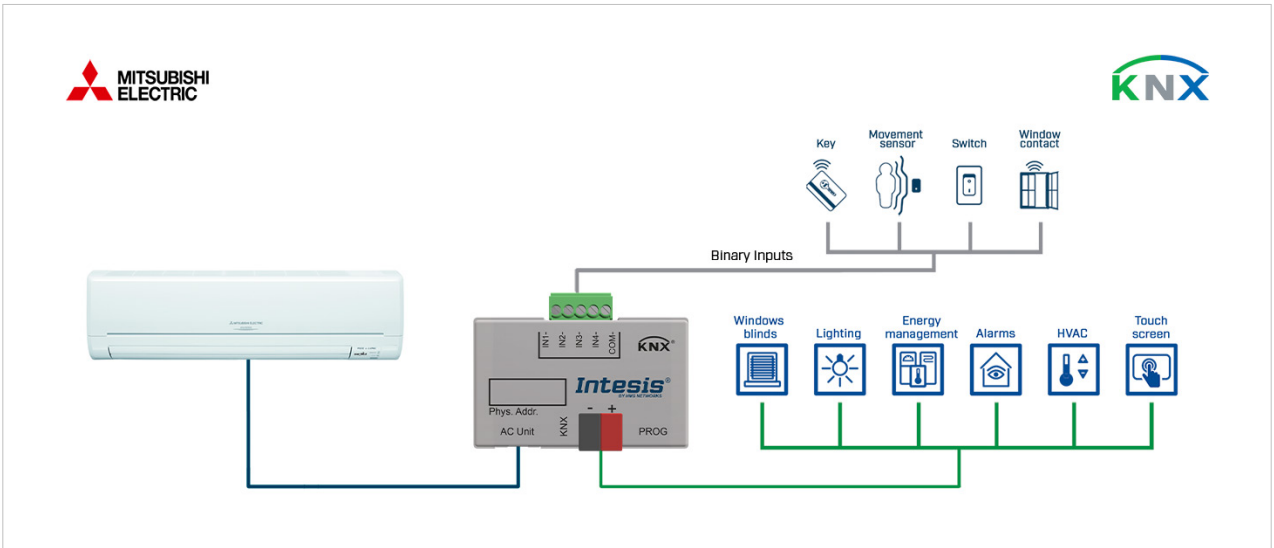

NOTE
This document assumes that the user is familiar with KNX TP and Mitsubishi Electric technologies and their technical terms.

3.1. Inside the Package

Items included:

- Intesis INKNXMIT001I100 gateway
- Cable to connect the gateway and the indoor unit
- Installation guide

3.2. Main Features

- Configuration using ETS, the KNX standard configuration tool.
- Reduced dimensions: 59 x 45 x 21 mm / 2.32 x 1.77 x 0.82"
- Compatible with all KNX thermostats in the market.
- Significant reduction of the HVAC system energy consumption.
- Smooth integration of KNX thermostats, allowing the control of the AC unit by the temperature sensor of the thermostat itself.
- Simultaneous control of the AC unit by the IR remote controller and by KNX.
- Total control and monitoring of the AC unit from the KNX system, including the AC unit's internal variables, running hours counter (for filter maintenance control), and error indication.
- Up to five scenes can be saved and executed from KNX.
- Four binary inputs to integrate external devices, such as window contacts or presence detectors.
- External power is not required.

3.3. General Functionality

Connect this gateway directly to an AC indoor unit to control main functions, such as operating mode, fan speed, temperature setpoint..., and to monitor errors, alarms, and some internal variables. The gateway is very easy to configure using the official KNX configuration tool and the ETS Database, which can be downloaded from the Intesis website.

3.4. Gateway Capacity

With this Intesis INKNXMIT001I100 gateway you can control one AC indoor unit.

3.5. Quickstart Guide

1. Place the gateway in the appropriate location. Due to the gateway's reduced dimensions, you can place it inside the AC indoor unit.
2. Connect the gateway to the AC unit using the supplied cable.
3. Connect the gateway to the KNX TP bus via its KNX port.
4. Download the ETS database for this product.
5. Import the database and add it to the current ETS project.
6. Link the KNX communication objects of the gateway with the communication objects of the KNX system by matching their group addresses.
7. Download the application program.
8. When the project is already configured, send it from the ETS software to the gateway using the standard procedure.

IMPORTANT
When configuring the gateway for the first time, use the **Full download** option.

4. Hardware

4.1. Gateway Layout

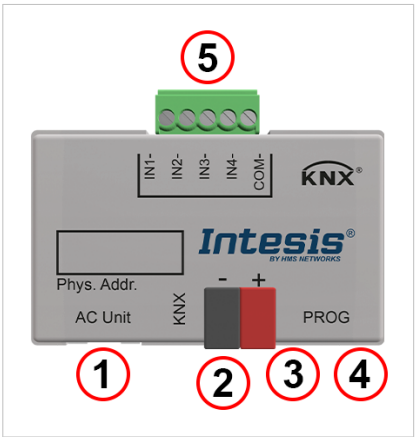

① AC unit connector
② KNX port
③ LED indicators
④ Push button
⑤ Binary inputs port

4.2. Mounting

NOTE
Mount the gateway over a DIN rail, preferably inside a grounded metallic industrial cabinet.

Inside the indoor unit:

Because of its reduced dimensions and weight, you can simply place the gateway on a flat surface inside the AC indoor unit.

TIP
You can use double-sided tape to stick the gateway.

IMPORTANT
Leaving the gateway to hang from the connection cable may cause a disconnection.

4.3. Connections

The gateway is delivered with a 1.5 m/4.92 ft cable for direct connection to the internal control board (PCB) of the AC indoor unit.

4.3.1. Connection to the AC Unit

1. Disconnect the AC unit from power.
2. Plug the largest unsheathed cable part connector into the socket CN92 (Mr Slim models) CN105 (rest of models) of the AC unit's control board (PCB). Plug the other end connector, the one on the shortest unsheathed part of the cable, into the gateway's socket labeled as **AC Unit**.
3. Fix the gateway inside or outside the AC indoor unit depending on your needs.

Figure 2. INKNXMIT001I100 Wiring Diagram

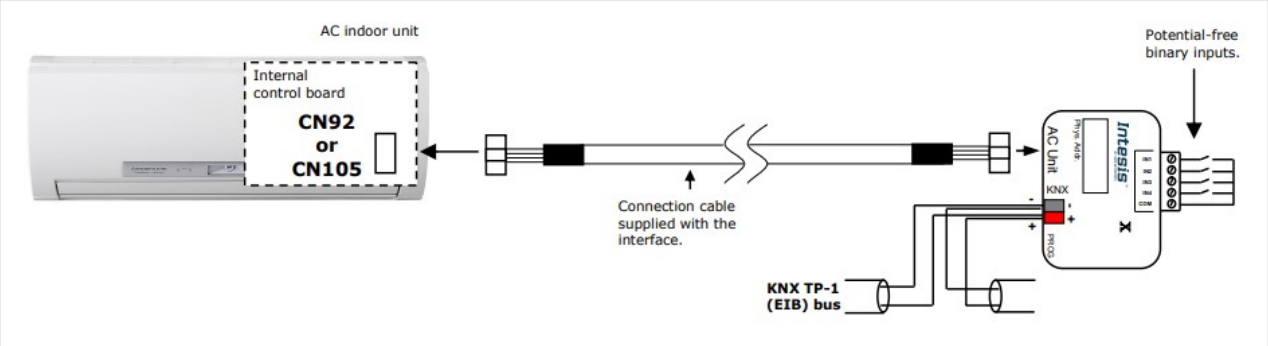

IMPORTANT
Modifying the cable may affect the behavior of the gateway's operation.

4.3.2. Connection to the KNX Bus

1. Disconnect the KNX bus from power.
2. Connect the gateway to the KNX TP bus using its standard KNX connector (red/grey).

NOTICE
Observe polarity on the KNX bus.

NOTE
Once the gateway is connected to the AC unit and to the KNX bus, reconnect all systems to power.

4.4. LED Indicators

Find two LEDs at the top right side, below the push button.

LED	Pattern	Description
Red LED	Off	KNX programming mode disabled
	On	KNX programming mode enabled
	Blinking	Individual address check
	Flashing (five times)	Restore factory settings process
Yellow RED	Flashing	Communication OK
	On	Communication error
	Blinking	AC error
	Off	No power

LED PATTERNS

- **ON**: 100% on
- **Blinking**: 50% on - 50% off
- **Flashing**: 10% on - 90% off
- **OFF**: 100% off

4.5. Push Button

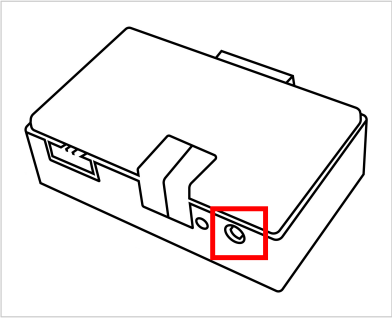

1. Push the button to activate the programming mode of the gateway.
2. Use the standard procedure to send the configured project from ETS to the gateway.

The button is also used for the **Unload Application and Address function**.

Look for KNX articles explaining more about download functions at: https://support.knx.org/hc/en-us

4.6. Technical Specifications

Housing	Material: Plastic, type ABS (UL 94 HB). 2.5 mm (3/32 in) thickness Color: Light grey, RAL 7035 Net dimensions: 59 x 45 x 21 mm / 2.32 x 1.77 x 0.82"
Weight	35 g / 1.2 oz
Power supply	29 VDC, 7 mA Supplied through KNX bus
LED indicators	1 x KNX programming
Push buttons	1 x KNX programming
Binary inputs	4 x Potential-free binary inputs Signal cable length: 5 m (16.4 feet) unshielded, extendable up to 20 m (65.6 feet) with twisted Compliant with the following standards: IEC61000-4-2 : level 4 - 15 kV (air discharge) - 8 kV (contact discharge) MIL STD 883E-Method 3015-7 : class3B
Configuration	Configuration with ETS
Operating temperature	-25 .. 60°C / -13 .. 140°F
Storage temperature	From -40 to 85ºC
Isolation voltage	4000 V 1500 VDC between ACX and EIB TP port C
Isolation resistance	1000 MΩ

4.7. Dimensions

- **Net dimensions (HxWxD)**
  Millimeters: 45 x 59 x 21 mm
  Inches: 1.77 x 2.32 x 0.83"

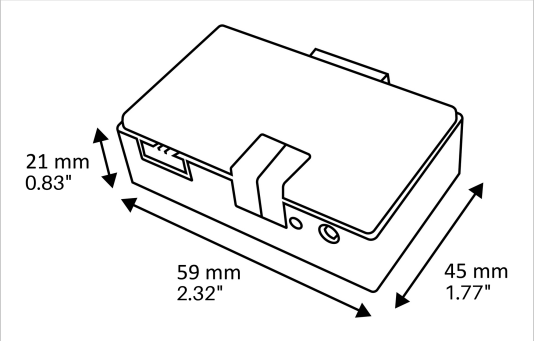

IMPORTANT
Leave enough clear space to wire the gateway easily and for the subsequent manipulation of elements.

5. Configuration

This is a fully compatible KNX gateway. Use ETS, the standard KNX software, to configure the gateway.

Download the ETS database for this gateway from: https://intesis.com/products/ac-interfaces/mitsubishi-electric-gateways/mitsubishi-electric-knxinputs-ac-me-ac-knx-1i

NOTE
Consult the README.txt file inside the downloaded zip file to find instructions on how to install the database.

5.1. ETS Parameters

When importing the database for the first time, the ETS software shows a default configuration menu with the following objects:

Object name	Possible values
Control_On/Off	0: Off 1: On
Status_On/Off	0: Off 1: On
Control_Mode	0:Auto 1: Heat 3: Cool 9: Fan 14: Dry
Status_Mode	0:Auto 1: Heat 3: Cool 9: Fan 14: Dry
Control_Fan Speed	Enumerated: 1 2 3 4 5 Scaling: 30 % 50 % 70 % 90 % 100 %

Object name	Possible values
Status_Fan Speed	Enumerated: 1 2 3 4 5 Scaling: 20 % 40% 60 % 80 % 100 %
Control_Setpoint Temperature	°C
Status_Setpoint Temperature	°C
Status_AC Return Temp	°C
Status_Error/Alarm	0: No alarm 1: Alarm
Status _Error Text Code	Empty: No error Any text: Error

5.1.1. General

You can activate or change the parameters shown in the parameter configuration view.

NOTE
The first field shows the URL to download the database and the user manual for the product.

5.1.1.1. Type of Unit

Choose the type of unit.

Possible values:

- AC unit
- LOSSNAY unit

NOTE
Even though the rest of the **General** parameters are the same for both unit types, other parameters are specific for AC or Lossnay units.

After reading the remaining topics of this **General** parameters section, please read Configuration Parameters for Type of Unit: AC Unit (page 14) or Configuration Parameters for Type of Unit: LOSSNAY Unit (page 42) according to the unit type.

5.1.1.2. Disallow Control from Remote Controller

Select **Yes** to lock the remote controller permanently. When selecting **No**, the remote controller works as usual, but a new parameter appears:

> Enable comm obj "Ctrl_ Remote Lock": Select **Yes** to decide when to lock and unlock the remote controller.

Possible values for this object:

- **1**: Lock the remote controller.
- **0**: Unlock the remote controller.

IMPORTANT
If an initial scene is enabled and its **Value for Remote Lock** is **(unchanged)** or **Unlocked**, the remote controller will be unlocked since initial scenes have priority over the **Control_ Lock Remote Control** communication object. To know more about scenes, see Scene Configuration (AC Units) (page 30).

NOTE
The gateway keeps in the memory the last value received even after a KNX bus reset/failure.

5.1.1.3. Scene to Load on Bus Recovery/Startup

Select which scene is executed after a bus recovery or startup.

IMPORTANT
The selected scene must have been previously enabled (Scene n preset=Yes) and configured. See Scene Configuration (AC Units) (page 30).

IMPORTANT
If the gateway is disconnected from the indoor unit after the bus recovery/startup, the scene is not applied even if you connect the gateway to the indoor unit again.

5.1.1.4. Enable the "Control_ Lock Control Obj" Object

Select **Yes** to enable the **Control_ Lock Control Objects** object.

Possible values for this object:

- **1**: Lock all Control objects.
- **0**: Unlock all Control objects.

NOTE
The gateway keeps in the memory the last value received even after a KNX bus reset/failure.

5.1.1.5. Send READs for Control_ Objects on Bus Recovery

Select **Yes** to enable this function. By doing so, all Control_ objects with both transmit **(T)** and update **(U)** flags enabled send read telegrams after a bus recovery or an application reset/startup.

The values of these objects are updated with the received response.

> Delay before sending READs (sec): Configure a delay between 0 and 30 seconds for the read telegrams sent by the Control_ objects. The aim of this function is to give enough time for other devices on the bus to start up before sending the read telegrams.

5.1.1.6. Enable "Operating Hour Counter" Object

Select **Yes** to enable the **Status_ Operation Hour Counter** communication object, which counts the number of operating hours for the INKNXMIT001I100 gateway.

Although this object is marked as a Status_ object, it can also be written to update the counter when needed. The object returns its status when its value changes.

To reset the counter, write a **0** value.

IMPORTANT
This object comes by default with the write **(W)** flag deactivated. You must activate it to write on the object.

IMPORTANT
If the stored value is 0 hours, the gateway does not send the status to the KNX system.

NOTE
The gateway keeps the last value received in memory even after a KNX bus reset/failure.

5.1.1.7. Enable the "Error Code [2byte]" Object

Select **Yes** to enable the **Status_ Error Code** communication object, which displays the AC indoor unit errors in numeric format.

Possible values for this object:

- **0**: There is no error.
- **Any other value**: Number of the error code.

5.1.1.8. Enable the "Error Text Code [14byte]" Object

Select **Yes** to enable the **Status_ Error Text Code [14 byte]** communication object, which shows the AC indoor unit errors in text format.

Possible values for this object:

- **Any value**: Error code settled by the manufacturer and as it is displayed on the remote controller.
- **No value**: There is no error.

6. Configuration Parameters for Type of Unit: AC Unit

NOTICE
The following sections cover the configuration for air conditioning units.

For Lossnay units, please read the sections under Configuration Parameters for Type of Unit: LOSSNAY Unit (page 42).

6.1. AC Mode Configuration

Control_ Mode [DTP_20.105 - 1byte] is the communication object for mode.

Possible values for this object:

- **0**: Auto mode
- **1**: Heat mode
- **3**: Cool mode
- **9**: Fan mode
- **14**: Dry mode

6.1.1. The Indoor Unit Has FAN Mode

NOTE
Read the documentation of your indoor unit to check if it allows this mode.

This parameter indicates if the indoor unit has the FAN mode available.

Possible values:

- **No**: The indoor unit does not allow the FAN mode.
- **Yes**: The indoor unit allows the FAN mode.

6.1.2. Enable "Mode Cool/Heat" Objects

Select **Yes** to enable the **Control_ Mode Cool/Heat** and the **Status_ Mode Cool/Heat** communication objects.

Possible values for these objects:

- **1**: Enable the Heat mode in the indoor unit. The **Status_** object returns this value.
- **0**: Enable the Cool mode in the indoor unit. The **Status_** object returns this value.

6.1.3. Enable the "PID-Compat. Scalling Mode" Objects

Select **Yes** to enable the **Control_ Mode Cool & On** and the **Control_ Mode Heat & On** communication objects.

These objects provide compatibility with KNX thermostats oriented to the control of custom heating/cooling systems and ready-made AC indoor units by applying the following logic:

- When the **Control_ Mode Cool & On** receives a non-zero value (>0%), the indoor unit turns on in the cool mode.
- When the **Control_ Mode Heat & On** receives a non-zero value (>0%), the indoor unit turns on in the heat mode.
- When the **Control_ Mode Cool & On** and the **Control_ Mode Heat & On** receive a zero value (0%), the indoor unit turns off.

The function of these objects is to send on/off and cool/heat telegrams to the indoor unit. The indoor unit itself calculates the PID (inverter system).

IMPORTANT
Introduce an appropriate PID configuration to the external KNX thermostat to not interfere with the indoor unit PID.

6.1.4. Enable Use of the "Mode +/-" Object

NOTE
Read the documentation of your indoor unit to check if it allows this mode.

Select **Yes** to enable the **Control_ Mode +/-** communication object. This mode allows you to change the indoor unit mode by using two different datapoint types:

- 0-Decrease / 1-Increase [DPT_1.007]
- 0-Up / 1-Down [DPT_1.008]

Figure 3. Sequence performed when using this object

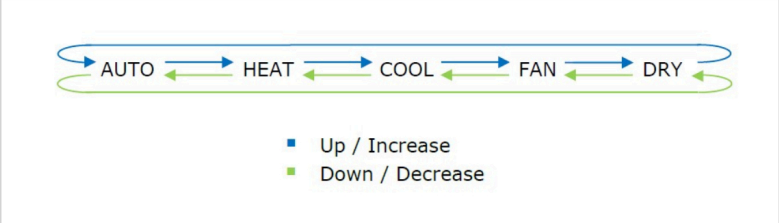

6.1.5. Enable Use of the Bit-type Mode Objects (for Control)

Select **Yes** to enable the following 1 bit-type objects:

- Control_ Mode Auto [DPT_1.002 - 1bit]
- Control_ Mode Heat [DPT_1.002 - 1bit]
- Control_ Mode Cool [DPT_1.002 - 1bit]
- Control_ Mode Fan [DPT_1.002 - 1bit]
- Control_ Mode Dry [DPT_1.002 - 1bit]

NOTE
Set the value to **1** to activate each object.

6.1.6. Enable Use of the Bit-type Mode Objects (for Status)

Select **Yes** to enable the following 1 bit-type objects:

- Status_ Mode Auto [DPT_1.002 - 1bit]
- Status_ Mode Heat [DPT_1.002 - 1bit]
- Status_ Mode Cool [DPT_1.002 - 1bit]
- Status_ Mode Fan [DPT_1.002 - 1bit]
- Status_ Mode Dry [DPT_1.002 - 1bit]

NOTE
Each mode will return a **1** through its bit-type object.

6.1.7. Enable Use of Text Object for Mode

Select **Yes** to enable the **Status_ Mode Text** communication object. This mode allows you to modify the text string displayed for each mode (AUTO, HEAT, COOL, FAN, and DRY).

NOTICE
Each text allows up to 14 characters.

6.1.8. Enable Use of Legacy_ Object for Mode

Select **Yes** to enable the **Legacy_ Mode** communication object. This mode allows you to change the indoor unit mode through a different data type.

NOTE
This object allows compatibility with old gateway models.

6.2. Special Modes Configuration

You can parameterize the special modes through the ETS parameters dialog to get extra functionalities.

SOME CONSIDERATIONS

- When executing any of these special modes, KNX does not show the indoor unit's real state.
- When the predefined time for the special mode finishes or a **0** value is sent to stop it, the AC unit's previous state is recovered.
- If a value concerning On/Off, Mode, Fan Speed, or Setpoint Temperature objects is received from KNX while any special mode is running (**1**), the special mode stops, the AC unit's previous state is recovered, and the value received is applied.
- If a value concerning On/Off, Mode, Fan Speed, or Setpoint Temperature objects is modified through the remote controller, the special mode stops without recovering the AC unit's previous state. Then, the indoor unit's real state is shown in KNX, including the new value received through the remote controller.

6.2.1. Enable Use of POWER Mode

Select **Yes** to enable the **Control_ Power Mode** and **Status_ Power Mode** communication objects. This mode allows you to change the setpoint temperature and the fan speed within a given period of time.

Possible values for these objects:

- **1**: Enable the communication objects for this mode. The **Status_** object returns this value.
- **0**: Disable the communication objects for this mode. The **Status_** object returns this value.

> Action time for this mode (minutes): Duration of the POWER mode, in minutes, once started (1 .. 180').

Possible values:

- 1 .. 180'
- **Default**: 30`

> Setpoint delta increase (HEAT) or decrease (COOL) (°C): Number of increased Celsius degrees in heat mode or decreased Celsius degrees in cool mode while in power mode.

Possible values:

- 0.0°C, 1.0°C, 2.0°C, 3.0°C, 4.0°C
- **Default**: 2.0°C

> Fan speed for this mode (if available): Fan speed set in the AC unit while in POWER mode.

Possible values:

- FAN SPEED AUTO (if available)
- FAN SPEED 1
- FAN SPEED 2
- FAN SPEED 3 (if available)
- FAN SPEED 4 (if available)
- FAN SPEED 5 (if available)
- (unchanged)
- **Default**: FAN SPEED 2

IMPORTANT
This mode will only work if the indoor unit is turned on and set in Heat, Cool, Auto-Heat, or Auto-Cool mode.

6.2.2. Enable Use of the Economy Mode

Select **Yes** to enable the **Control_ Econo Mode** and **Status_ Econo Mode** communication objects. This mode allows you to change the setpoint temperature and the fan speed within a given period of time.

Possible values for these objects:

- **1**: Enable the communication objects for this mode. The **Status_** object will return this value.
- **0**: Disable the communication objects for this mode. The **Status_** object will return this value.

> Action time for this mode (minutes): Duration of the ECONOMY mode, in minutes, once started.

Possible values:

- 1 .. 180'
- **Default**: 30'

> Setpoint delta decrease (HEAT) or increase (COOL) (°C): Number of decreased Celsius degrees in heat mode or increased Celsius degrees in cool mode while in ECONOMY mode.

Possible values:

- 0.0°C
- 0.1°C
- 0.2°C (Default value)
- 0.3°C
- 0.4°C

> Fan speed for this mode (if available): Fan speed set in the AC unit while in ECONOMY mode.

Possible values:

- FAN SPEED AUTO (if available)
- FAN SPEED 1 (Default value)
- FAN SPEED 2

- FAN SPEED 3 (if available)
- FAN SPEED 4 (if available)
- FAN SPEED 5 (if available)
- (unchanged)

IMPORTANT
This mode will only work if the indoor unit is both turned on and in a Heat, Cool, Auto-Heat, or Auto-Cool mode.

6.2.3. Enable Use of the Additional Heating Mode

Select **Yes** to enable the **Control_ Start Additional Heat Mode** and **Status_ Additional Heat Mode** communication objects. This mode allows you to change the setpoint temperature and the fan speed within a given period of time.

Possible values for these objects:

- **1**: Enable the communication objects for this mode. The **Status_** object will return this value.
- **0**: Disable the communication objects for this mode. The **Status_** object will return this value.

> Action time for this mode (minutes): Duration of the ADDITIONAL HEATING mode, in minutes, once started.

Possible values:

- 1 .. 180'
- **Default**: 30'

> Setpoint temp for this mode (°C): Setpoint temperature applied for this mode.

Possible values:

- 19.0 .. 28.0°C
- **Default**: 28.0°C

> Fan speed for this mode (if available): Fan speed set in the AC unit while in ADDITIONAL HEATING mode.

Possible values:

- FAN SPEED AUTO (if available)
- FAN SPEED 1
- FAN SPEED 2 (Default value)
- FAN SPEED 3 (if available)
- FAN SPEED 4 (if available)
- FAN SPEED 5 (if available)
- (unchanged)

NOTE
This mode will always turn on the indoor unit in Heat mode.

6.2.4. Enable Use of the Additional Cooling Mode

Select **Yes** to enable the **Control_ Start Additional Cool Mode** and **Status_ Additional Cool Mode** communication objects. This mode allows you to change the setpoint temperature and the fan speed within a given period of time.

Possible values for these objects:

- **1**: Enable the communication objects for this mode. The **Status_** object will return this value.
- **0**: Disable he communication objects for this mode. The **Status_** object will return this value.

> Action time for this mode (minutes): Duration of the ADDITIONAL COOLING mode, in minutes, once started.

Possible values:

- 1 .. 180'
- **Default**: 30'

> Setpoint temp for this mode (°C): Setpoint temperature applied for this mode.

Possible values:

- 19.0 .. 28.0°C
- **Default**: 19.0°C

> Fan speed for this mode (if available): Fan speed set in the AC unit while in ADDITIONAL COOLING mode.

Possible values:

- FAN SPEED AUTO (if available)
- FAN SPEED 1
- FAN SPEED 2 (Default value)
- FAN SPEED 3 (if available)
- FAN SPEED 4 (if available)
- FAN SPEED 5 (if available)
- (unchanged)

IMPORTANT
This mode will always turn on the indoor unit in Cool mode.

6.3. Fan Speed Configuration (AC Units)

6.3.1. Fan is Accessible in Indoor Unit

NOTE
Read the documentation of your indoor unit to check if it allows this mode.

This parameter indicates if the unit has fan speed control available or not.

Possible values:

- **No**: The indoor unit does not allow fan speed control. The parameters for this function are not shown.
- **Yes**: The indoor unit allows fan speed control. The parameters for this function are shown.

6.3.2. Available Fan Speeds in the Indoor Unit

NOTE
Read the documentation of your indoor unit to check how many fan speeds are available.

Select how many fan speeds are available in the indoor unit.

Possible values

- 2, 3, 4, 5
- **Default**: 3

6.3.3. The Indoor Unit Has AUTO Fan Speed

NOTE
Read the documentation of your indoor unit to check if it allows this mode.

This parameter indicates if the unit has auto fan speed or not.

Possible values

- **No**: The indoor unit does not allow auto fan speed. The parameters for this function are not shown.
- **Yes**: The indoor unit allows auto fan speed. The parameters for this function are shown.
  For more information, see Enable "Fan Speed Man/Auto" Objects (for Control and Status)

NOTICE
The indoor unit chooses the most appropriate fan speed when in auto mode. That fan speed is not shown in KNX or the remote controller.

6.3.4. DPT Object Type for Fan Speed

NOTE
Read the documentation of your indoor unit to check how many fan speeds are available.

Change de DPT for the Control_ Fan Speed and Status_ Fan Speed byte-type communication objects:

- **Scaling [DPT_5.001]**: The values for Control_ and Status_ objects are shown in % and vary depending on the available fan speeds and the fan speed currently selected.

  NOTE
  Formulas for the thresholds:
  - Control_ object: 100×(n+0.5)/N
  - Status_ object: 100×(n/N)
    Where:
    n: current position selected.
    N: total number of positions available.

Table 1. Values sent to the Control_ object and returned by the Status_ object

Available fan speeds	Values for fan speed 1	Values for fan speed 2	Values for fan speed 3	Values for fan speed 4	Values for fan speed 5
2	Control_: 0-74% Status_: 50%	Control_: 75-100% Status_: 100%	-	-	-
3	Control_: 0-49% Status_: 33%	Control_: 50-82% Status_: 67%	Control_: 83-100% Status_: 100%	-	-
4	Control_: 0-37% Status_: 25%	Control_: 38-62% Status_: 50%	Control_: 63-87% Status_: 75%	Control_: 88-100% Status_: 100%	-
5	Control_: 0-29% Status_: 20%	Control_: 30-49% Status_: 40%	Control_: 50-69% Status_: 60%	Control_: 70-89% Status_: 80%	Control_: 90-100% Status_: 100%

- **Enumerated [DPT 5.010]**: The values for Control_ and Status_ objects are shown in numbers 1 to 5, depending on the available fan speeds.
  Possible values:
  - **0**: Fan speed 1 is selected
  - **1 .. 5**: Fan speed 1 to 5 is selected
  - **> 5**: Fan speed 5 is selected

6.3.5. Enable Use of Bit-type Fan Speed Objects (for Control)

Select **Yes** to enable **Control_ Fan Speed 1** to **Control_ Fan Speed 5** 1 bit-type objects.

NOTE
Send a value of **1** to activate each one of these objects.

6.3.6. Enable Use of the Bit-type Fan Speed Objects (for Status)

Select **Yes** to enable **Status_ Fan Speed 1** to **Status_ Fan Speed 5** 1 bit-type objects.

NOTE
When one of these fan speeds is enabled, a value of **1** is returned through this bit-type object.

6.3.7. Enable Use of the "Fan Speed +/-" Object

Select **Yes** to enable the **Control_ Fan Speed +/-** communication object. Also, three more parameters appear:

> DPT type for +/- fan speed object: Choose between two datapoint types to increase/decrease the indoor unit fan speed:

- 0-Decrease / 1-Increase [DPT_1.007]
- 0-Up / 1-Down [DPT_1.008]

> Does +/- sequence include fan speed Auto mode?

Possible values:

- **Yes**: The AUTO function is included in the sequence.
- **No**: The AUTO function is not included.

NOTE
The discontinuous segment in the picture below indicates the sequence performed when the AUTO function is included.

Figure 4. Sequence performed depending on the AUTO function inclusion

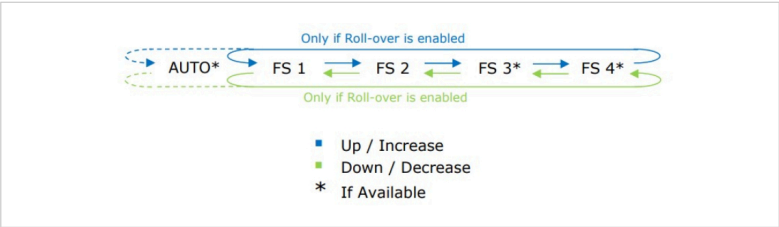

> Rollover speed at upper/lower limit

Possible values:

- **Yes**: Rollover is enabled. The next fan speed after the maximum one is the minimum one and vice versa, allowing a cyclic sequence.

  NOTE
  See the blue arrow and the green arrow surrounding the fan speeds in the picture above.

- **No**: Rollover is disabled. The maximum and minimum fan speeds are limits for the allowed forward and backward sequence.

  NOTE
  See the green and blue arrows between each fan speed in the picture above.

6.3.8. Enable Use of Text Object for Fan Speed

Select **Yes** to enable the **Status_ Fan Speed Text** communication object.

NOTE
Also, a new parameter for each fan speed appears, allowing you to modify the text string displayed by the **Status_ Fan Speed Text** when changing the fan speed.

NOTICE
Each text allows up to 14 characters.

6.3.9. Enable Use of Legacy_ Object for Fan Speed

Select **Yes** to enable the **Legacy_ Fan Speed** communication object, which allows you to change the indoor unit fan speed using a different data type.

NOTE
This object allows compatibility with old gateway models.

6.4. Vane Up-Down Configuration

6.4.1. The Indoor Unit Has U-D Vanes

NOTE
Read the documentation of your indoor unit to check if it allows this mode.

Select **Yes** if the unit allows the control of up-down vanes.

Nine more parameters appear to configure the up-down vanes control:

6.4.2. Available Vane Positions in the Indoor Unit

NOTE
Read the documentation of your indoor unit to check how many vane positions are available.

Choose how many vane positions are available for the indoor unit.

Possible values:

- 4, 5
- **Default**: 5

6.4.3. Indoor Unit Has AUTO Vanes U-D

NOTE
Read the documentation of your indoor unit to know if it allows this mode.

1. Select **Yes** to enable the **Enable "Vanes U-D Man/Auto" objects (for Control and Status)** parameter.

   NOTE
   This parameter appears below, between **Enable use of bit-type Vanes U-D objects (for Control)** and **Enable use of bit-type Vanes U-D objects (for Status)**.

2. Select **Yes** in this parameter to enable the **Control_ Vanes U-D Man/Auto** and **Status_ Vanes U-D Man/Auto** communication objects.
   Possible values for these objects:

   - **1**: Set the vanes U-D in auto mode. The **Status_** object will return this value.

     IMPORTANT
     When in auto mode, the indoor unit chooses the most appropriate vanes U-D position, but this is not shown either in KNX or in the remote controller.

   - **0**: Set the vanes U-D in manual mode. The **Status_** object will return this value.

     NOTE
     When in manual mode, the first position is enabled.

6.4.4. Indoor Unit Has SWING Vanes U-D

NOTE
Read the documentation of your indoor unit to know if it allows this mode.

Select **Yes** to enable the **Control_ Vanes U-D Swing** and the **Status_ Vanes U-D Swing** communication objects.

Possible values:

- **1**: Swing
- **0**: Off

NOTE
The **Status_** object will return this value.

6.4.5. DPT Object Type for Vanes Up-Down

NOTE
Read the documentation of your indoor unit to check how many vane positions are available.

Change the DPT for the **Control_ Vanes U-D / 4 pos** and **Status_ Vanes U-D / 4 pos** communication objects.

- **Scaling [DPT_5.001]**: The values for Control_ and Status_ objects are shown in % and vary depending on the number of available positions and the position currently selected.

> **NOTE**
> **Formulas for the thresholds:**
> - Control_ object: 100×(n+0.5)/N
> - Status_ object: 100×(n/N)
> Where:
> **n**: current position selected.
> **N**: total number of positions available.

Table 2. Values sent to the Control_ object and returned by the Status_ object

Available positions	Values for position 1	Values for position 2	Values for position 3	Values for position 4	Values for position 5
4	Control_: 0-37% Status_: 25%	Control_: 38-62% Status_: 50%	Control_: 63-87% Status_: 75%	Control_: 88-100% Status_: 100%	-
5	Control_: 0-29% Status_: 20%	Control_: 30-49% Status_: 40%	Control_: 50-69% Status_: 60%	Control_: 70-89% Status_: 80%	Control_: 90-100% Status_: 100%

- **Enumerated [DPT 5.010]**: The values for Control_ and Status_ objects are shown in numbers, from 1 to 4 depending on the number of available positions for the vanes U-D.
  Possible values:
  - **0**: Position 1 is selected
  - **1 .. 5**: Position 1 to 5 is selected
  - **> 5**: Position 5 is selected

6.4.6. Enable Use of Bit-type Vanes U-D Objects (for Control)

Select **Yes** to enable the **Control_ Vanes U-D Pos 1** to **Control_ Vanes U-D Pos 4** 1 bit-type objects.

> **NOTE**
> Send a value of **1** to activate each one of these objects.

6.4.7. Enable Use of Bit-type Vanes U-D Objects (for Status)

Select **Yes** to enable the **Status_ Vanes U-D Pos 1** to **Status_ Vanes U-D Pos 4** 1bit-type objects.

> **NOTE**
> When one of these positions is enabled, a value of **1** is returned through this bit-type object.

6.4.8. Enable Use of the "Vanes U-D +/-" Object

Select **Yes** to enable the **Control_ Vanes U-D +/-** communication object. Also, three more parameters appear:

> DPT type for +/- Vanes U-D object: Choose between two datapoint types to increase/decrease the position for the vanes U-D:

- 0-Decrease / 1-Increase [DPT_1.007]
- 0-Up / 1-Down [DPT_1.008]

> Does +/- sequence include Auto function for vanes Up-Down?

Possible values:

- **Yes**: The AUTO function is included in the sequence.
- **No**: The AUTO sequence is not included.

> **NOTE**
> The discontinuous segment on the left in the picture below indicates the sequence performed when the AUTO function is included.

Figure 5. Sequence performed depending on the AUTO function inclusion

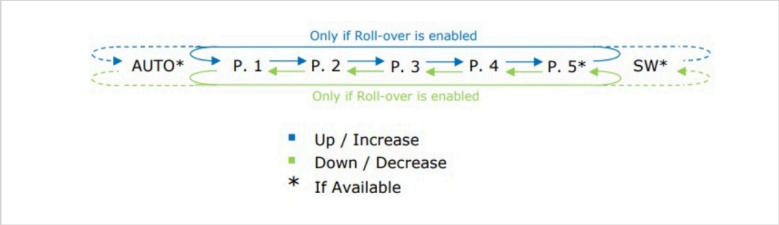

> Rollover Vanes at upper/lower limit

Possible values:

- **Yes**: Rollover is enabled. The next position after the maximum one is the minimum one (or AUTO if enabled) and vice versa, allowing a cyclic sequence.

  > **NOTE**
  > See the blue arrow and the green arrow surrounding the positions in the picture above.

- **No**: Rollover is disabled. The maximum and minimum positions are limits for the allowed forward and backward sequence.

  > **NOTE**
  > See the green and blue arrows between each position in the picture above.

6.4.9. Enable "Vanes U-D Man/Auto" Objects (for Control and Status)

> **NOTE**
> See Indoor Unit Has AUTO Vanes U-D (page 23).

6.4.10. Enable the “Vanes U-D Swing” Objects (for Control and Status)

Select **Yes** to enable the **Control_ Vanes U-D Swing** and **Status_ Vanes U-D Swing** communication objects.

Possible values:

- **1**: Set vanes U-D in swing mode. The **Status_** object will return this value.
- **0**: Stop the swing mode for the vanes U-D. The **Status_** object will return this value.

6.4.11. Enable Use of Text Object for Vanes U-D

Select **Yes** to enable the **Status_ Vanes U-D Text** communication object.

> **NOTE**
> Also, a new parameter for each vanes U-D position appears, allowing you to modify the text string displayed by the **Status_ Vanes U-D Text** when changing the position.

6.4.12. Enable Use of Legacy_ for Vanes

Select **Yes** to enable the **Legacy_ Vanes** communication object, which allows you to change the indoor unit vanes behavior using a different data type.

> **NOTE**
> This object is used to maintain compatibility with old gateway models.

6.5. Vane Left-Right Configuration

6.5.1. Indoor Unit Has L-R Vanes

> **NOTE**
> Read the documentation of your indoor unit to check if it allows this mode.

Select **Yes** if the unit allows the control of vanes L-R.

Eight more parameters appear to configure the vanes L-R control:

6.5.2. Available Positions in Indoor Unit

> **NOTE**
> Read the documentation of your indoor unit to check how many vanes L-R positions are available.

Choose how many vanes positions are available for the indoor unit.

Possible values:

- 5, 6
- **Default**: 6

6.5.3. Indoor Unit Has SWING Vanes L-R

> **NOTE**
> Read the documentation of your indoor unit to know if it allows this mode.

Select **Yes** to enable the **Control_ Vanes L-R Swing** and the **Status_ Vanes L-R Swing** communication objects.

Possible values:

- **1**: Swing
- **0**: Off

> **NOTE**
> The **Status_** object will return this value.

6.5.4. DPT Object Type for Vanes Left-Right

> **NOTE**
> Read the documentation of your indoor unit to check how many vanes positions are available.

Change the DPT for the **Control_ Vanes L-R / 6 pos** and **Status_ Vanes L-R / 6 pos** communication objects:

- **Scaling [DPT_5.001]**: The values for Control_ and Status_ objects are shown in % and vary depending on the available positions and the position currently selected.

> **NOTE**
> **Formulas for the thresholds:**
> - Control_ object: 100×(n+0.5)/N
> - Status_ object: 100×(n/N)
> Where:
> **n**: current position selected.
> **N**: total number of positions available.

Table 3. Values sent to the Control_ object and returned by the Status_ object

Available positions	Values for position 1	Values for position 2	Values for position 3	Values for position 4	Values for position 5	Values for position 6
5	Control_: 0-29% Status_: 20%	Control_: 30-49% Status_: 40%	Control_: 50-69% Status_: 60%	Control_: 70-89% Status_: 80%	Control_: 90-100% Status_: 100%	-
6	Control_: 0-25% Status_: 17%	Control_: 26-42% Status_: 34%	Control_: 43-58% Status_: 51%	Control_: 59-75% Status_: 68%	Control_: 76-91% Status_: 85%	Control_: 92-100% Status_: 100%

- **Enumerated [DPT 5.010]**: The values for Control_ and Status_ objects are shown in numbers, from 1 to 6 depending on the number of available positions for the vanes L-R.
  Possible values:
  - **0**: Position 1 is selected
  - **1 .. 6**: Position 1 to 6 is selected
  - **> 6**: Position 6 is selected

6.5.5. Enable Use of Bit-type Vanes L-R Objects (for Control)

Select **Yes** to enable the **Control_ Vanes L-R Pos 1** to **Control_ Vanes L-R Pos 6** 1 bit-type objects.

> **NOTE**
> Send a value of **1** to activate each one of these objects.

6.5.6. Enable Use of Bit-type Vanes L-R Objects (for Status)

Select **Yes** to enable the **Status_ Vanes L-R Pos 1** to **Status_ Vanes L-R Pos 6** 1bit-type objects.

> **NOTE**
> When one of these positions is enabled, a value of **1** is returned through this bit-type object.

6.5.7. Enable Use of +/- Object for Vanes L-R

Select **Yes** to enable the **Control_ Vanes L-R +/-** communication object. Also, three more parameters appear:

> DPT type for +/- Vanes L-R object: Choose between two datapoint types to increase/decrease the position for the vanes L-R:

- 0-Decrease / 1-Increase [DPT_1.007]
- 0-Up / 1-Down [DPT_1.008]

> Does +/- sequence include vanes Left-Right SWING?

Possible values:

- **Yes**: The Swing function is included.

> **NOTE**
> The discontinuous segment on the right in the picture below shows the sequence performed when this function is included.

- **No**: The Swing function is not included.

Figure 6. Sequence performed depending on the SWING function inclusion

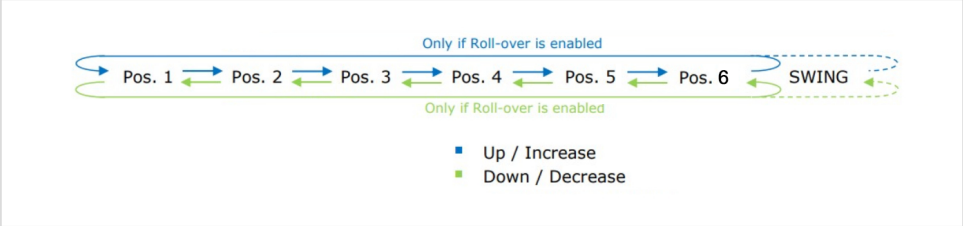

> Rollover Vanes at upper/lower limit

Possible values:

- **Yes**: Rollover is enabled. The next position after the maximum one is the minimum one and vice versa, allowing a cyclic sequence.

> **NOTE**
> See the blue arrow and the green arrow surrounding the positions in the picture above.

- **No**: Rollover is disabled. The maximum and minimum positions are limits for the allowed forward and backward sequence.

> **NOTE**
> See the green and blue arrows between each position in the picture above.

6.5.8. Enable "Vanes L-R Swing" Objects (for Control and Status)

> **NOTE**
> Read the documentation of your indoor unit to check if it allows this mode.

Select **Yes** to enable the **Control_ Vanes L-R Swing** and **Status_ Vanes L-R Swing** communication objects.

Possible values:

- **1**: Set vanes L-R in swing mode. The **Status_** object will return this value.
- **0**: Stop the swing mode for the vanes L-R. The **Status_** object will return this value.

6.5.9. Enable Use of Text Objects for Vanes L-R

Select **Yes** to enable the **Status_ Vanes L-R Text** communication object.

> **NOTE**
> Also, a new parameter for each vanes L-R position appears, allowing you to modify the text string displayed by the **Status_ Vanes L-R Text** when changing the position.

6.6. Temperature Configuration

6.6.1. Periodic Sending of "Status_ AC Setp"

Set the interval of time, in seconds, after which the setpoint temperature is sent to the KNX bus.

Possible values:

- 0 .. 255 sec
- **Default**: 0

> **NOTE**
> With this value of **0**, the AC setpoint is only sent to the bus when it changes.

> **NOTE**
> If the ambient temperature is provided from KNX, the returned setpoint temperature is the result of the formula explained in section Ambient Temp. Ref. is Provided from KNX (page 30).

6.6.2. Transmission of "Status_ AC Return Temp"

Decide when this object returns the temperature.

Possible values:

- Only cyclically
- Only on change
- Cyclically and on change

For **Only cyclically** and **Cyclically and on change**, a new parameter appears:

> "Status_ AC SetTemp" periodic sending time (in sec): Set the interval of time, in seconds, after which the AC return temperature is sent to the KNX bus.

Possible values

- 1 .. 255 sec
- **Default**: 180 sec

6.6.3. Enable Use of +/- Obj for Setpoint Temp

Select **Yes** to enable the **Control_ Setpoint Temp +/-** communication object. Also, a new parameter appears:

> DPT type for +/- Setp Temp object: Choose between two datapoint types to increase/decrease the setpoint temperature:

- 0-Decrease / 1-Increase [DPT_1.007]
- 0-Up / 1-Down [DPT_1.008]

6.6.4. Enable Limits on Control_ Setpoint Obj

Select **Yes** to define limits for the **Control_ Setpoint Temperature** object.

> Lower limit (°C): Set the lower limit for the setpoint temperature.

> Upper limit (°C): Set the upper limit for the setpoint temper

NOTE
By selecting **No** (default value), the setpoint temperature limits for the **Control_ Setpoint Temperature** object are the default ones:

- Lower limit: 19.0°C
- Upper limit: 28.0°C

NOTE
When limits are defined, any setpoint temperature sent to the AC unit, even through scenes, special modes, etc., will be limited.

6.6.5. Ambient Temp. Ref. is Provided from KNX

Select **Yes** to enable the **Control_ Ambient Temperature** communication object, which allows you to use an ambient temperature reference provided by a KNX device.

The gateway uses this formula to calculate the real Control_ Setpoint Temperature and send it to the AC unit:

“AC Setp. Temp” = “AC Ret. Temp” - (“KNX Amb.Temp” -“KNX Setp. Temp”)

Where:

- **AC Setp. Temp.**: AC indoor unit setpoint temperature
- **AC Ret. Temp.**: Ambient temperature provided from KNX
- **KNX Amb. Temp.**: Ambient temperature provided from KNX.
- **KNX Setp. Temp.**: Setpoint temperature provided from KNX.

TIP
As an example, consider the following situation:

The user wants **19ºC** (KNX Setp. Temp).

The KNX sensor reads **21ºC** (KNX Amb Temp).

The ambient temperature read by the Mitsubishi Electric system is **24ºC** (AC Ret. Temp).

In this example, the final setpoint temperature sent to the indoor unit (shown in “AC Setp. Temp”) is: 24ºC – (21ºC - 19ºC) = **22ºC**. This is the setpoint actually requested to the Mitsubishi Electric unit.

NOTE
This formula is applied when the **Control_ Setpoint Temperature** and **Control_ Ambient Temperature** objects are written at least once from the KNX installation. After that, they are always kept consistent.

6.7. Scene Configuration (AC Units)

NOTE
A scene contains values about: On/Off, Mode, Fan speed, Vane position, Setpoint Temperature, and Remote Controller Disablement.

6.7.1. Enable Use of Scenes

Select **Yes** to enable the **Control_ Execute Scene** communication object and to open the scene configuration parameters.

Possible values

- **0**: Execute scene 1
- **1**: Execute scene 2
- **3**: Execute scene 4
- **4**: Execute scene 5

6.7.2. Scenes Can Be Stored from KNX Bus

Select **Yes** to enable the **Control_ Save/Exec Scene** communication object.

> **NOTE**
> This object substitutes the **Control_ Execute Scenes** object.

Possible values for Control_ Save/Exec Scenes:

- **128**: Save scene 1
- **129**: Save scene 2
- **130**: Save scene 3
- **131**: Save scene 4
- **132**: Save scene 5

Also, a new parameter appears:

> Enable use of bit objects for storing scenes (from bus)

Select **Yes** to enable the **Control_ Store Scene 1** to **Control_ Store Scene 5** communication objects.

> **NOTE**
> Send a value of **1** to save each scene, i.e., send a **1** to the **Control_ Store Scene 4** to save scene 4.

6.7.3. Enable Use of Bit Objects for Scene Execution

Select **Yes** to enable the **Control_ Execute Scene 1** to **Control_ Execute Scene 5** bit-type communication objects.

> **NOTE**
> Send a value of **1** to execute each scene, i.e., send a **1** to **Control_ Execute Scene 4** to execute scene 4.

6.7.4. Scene n Preset (AC Units)

> **NOTE**
> For the INKNXMIT001I100 gateway you can preset up to five scenes.

Select **Yes** to enable a preset for a scene. When a scene is executed, the values configured in the preset apply.

> **IMPORTANT**
> When enabling a preset for a scene, that scene is not modifiable from the KNX bus.

> Scene n / Value for On-Off: Choose the power status of the indoor unit when the scene is executed.

Possible values

- ON
- OFF
- (unchanged) (Default value)

> Scene n / Value for Mode: Choose the mode of the indoor unit when the scene is executed.

Possible values

- AUTO
- HEAT
- COOL
- FAN (if available)
- DRY
- (unchanged) (Default value)

> Scene n / Value for Fan speed (if available): Choose the fan speed of the indoor unit when the scene is executed.

Possible values

- FAN SPEED AUTO (if available)
- FAN SPEED 1
- FAN SPEED 2
- FAN SPEED 3
- FAN SPEED 4
- FAN SPEED 5 (if available)
- (unchanged) (Default value)

> Scene n / Value for Vane U-D (if available): Choose the vanes position (U-D) of the indoor unit when the scene is executed.

Possible values

- VANES U-D AUTO (if available)
- VANES U-D POS 1
- VANES U-D POS 2
- VANES U-D POS 3
- VANES U-D POS 4
- VANES U-D POS 5 (if available)
- VANES U-D SWING
- (unchanged) (Default value)

> Scene n / Value for Setp Temp (ºC): Choose the setpoint temperature of the indoor unit when the scene is executed.

Possible values

- 19 .. 28°C
- (unchanged) (Default value)

> Scene n / Value for Remote Lock: Choose the remote controller status of the indoor unit when the scene is executed.

Possible values

- Locked (remote not allowed)
- Unlocked (remote allowed)
- (unchanged)

NOTICE
If any preset value is configured as **(unchanged)**, the execution of this scene will not change the current status of this feature in the AC unit.

IMPORTANT
When a scene is executed, the **Status_ Current Scene** object shows the number of that scene. If a scene parameter value changes, that scene is disabled and the **Status_ Current Scene** object shows **No Scene**.

EXCEPTION: The scene remains enabled when the changed value affects a parameter marked as **(unchanged)**.

EXAMPLE:

Scene 1 is running. The **Scene 1 / Value for Mode** is set to **HEAT**. When the user changes the mode to AUTO using the remote controller, for example, Scene 1 is disabled.

Scene 1 is running. The **Scene 1 / Value for Mode** is set to **(unchanged)**. When the user changes the mode from HEAT to AUTO using the remote controller, for example, Scene 1 is still running.

6.8. Occupancy and Switch-Off Timeouts Configuration

6.8.1. Enable Use of Open Window / Switch Off Timeout Function

Select **Yes** to enable the **Control_ Switch Off Timeout** communication object, which allows you to start/stop a timeout to turn the indoor unit on and off.

Possible values:

- **1**: The switch-off timeout starts.
- **0**: The switch-off timeout stops.

NOTE
These values apply when the indoor unit is already turned on.

Also, new parameters appear:

> AC switch-off timeout (min): Select the time, in minutes, before the indoor unit turns off.

Possible values

- 0 .. 30'
- **Default**: 10'

> DPT for Window / Switch-off timeout

Possible values

- 0-Open / 1-Closed Window [DPT_1.009]
- 0-Stop / 1-Start Timeout [DPT_1.010] (Default value)

> Disallow On/Off operation while timeout is elapsed

Possible values:

- **No**: On/Off commands are accepted while the window is open.
- **Yes**: On/Off commands are saved but not applied while the window is open. (See the next parameter).

> **NOTE**
> If a value of **1** is sent to the **Control_ Switch Off Timeout** object, the switch-off timeout period will begin again. A value of **0** sent to this object will take no effect.

> Reload last On/Off value once timeout is stopped

Possible values:

- **No**: once the switch-off timeout is stopped, any value is reloaded.
- **Yes**: once the switch-off timeout is stopped, the saved On/Off command value is reloaded. (See the previous parameter).

> **NOTE**
> If a value of **1** is sent to the **Control_ Switch Off Timeout** object after the timeout period, the indoor unit turns on. A value of **0** sent to this object after the timeout period will take no effect.

6.8.2. Enable Use of Occupancy Function

Select **Yes** to enable the **Control_ Occupancy** communication object.

> **NOTE**
> If a value of **1** is sent to the **Control_ Occupancy** object, the switch-off timeout period starts. If a value of **0** is sent to this object, the timeout stops.

Also, new parameters appear:

> Timeout to apply action (minutes): Choose the time, in minutes, before the action specified in the next parameter (**Action after timeout elapsed**) is executed.

Possible values:

- 0 .. 180'
- **Default**: 20'

> **NOTE**
> This time is considered part of the occupancy.

> Action after timeout elapsed

Possible values:

- **Switch Off**: The indoor unit turns off once the timeout has elapsed.
- **Apply Preset Delta**: In order to save energy, a delta temperature is applied once the timeout has elapsed. For the heat mode, the setpoint temperature decreases; for the cool mode, the setpoint temperature increases. Also, new parameters appear when selecting the Apply Preset Delta option:
  > Temp delta decrease (HEAT) or increase (COOL) (ºC): Configure the delta temperature that will be applied when the timeout has elapsed.

Possible values:

– 0.0 .. 4.0°C
– **Default**: 2.0°C

NOTE
When there is occupancy again after the application of a delta, the same delta will be applied inversely.

EXAMPLE
The room's AC unit is in cool mode, operating at 25°C. When the room is unoccupied, the +2°C delta temperature is applied, so the AC setpoint temperature rises to 27°C. When the room is occupied again, a -2°C delta temperature is applied, so the AC unit operates at 25°C again.

> Enable secondary timeout: Select **Yes** to enable a secondary timeout.

NOTE
To configure this secondary timeout, follow the previous steps.

The parameters for this secondary timeout are the same as the previous ones but with a small difference regarding the values:

– Possible values for **Timeout to apply action (minutes)**: 1 .. 180'
– Default value for **Temp delta decrease (HEAT) or increase (COOL) (ºC)**: 3.0°C

> Disallow On/Off operation while not Occupied

Possible values:

- **No**: On/Off commands are accepted while the window is open.
- **Yes**: Once the switch-off action has been executed, On/Off commands are saved but not applied while the window is open. (See the next parameter).

NOTE
The countdown time (transitional time between occupancy and non-occupancy) is considered as a part of the occupancy status as explained before.

> Reload last On/Off value when Occupied

Possible values:

- **No**: once the switch-off timeout has elapsed, any value is reloaded.
- **Yes**: once the switch-off timeout has elapsed, the saved On/Off command value is reloaded. (See the previous parameter).

NOTE
If a value of **1** is sent to the **Control_ Occupancy** object after the timeout period, the indoor unit turns on. A value of **0** sent to this object after the timeout period will take no effect.

6.8.3. Enable Use of Sleep Function

Select **Yes** to enable the **Control_ Sleep Timeout** communication object, which allows you to start a timeout to automatically turn the indoor unit off.

NOTE
If a value of **1** value is sent to this object, the switch-off timeout starts. If a value of **0** is sent to this object, the switch-off timeout stops.

Also, a new parameter appears:

Sleep function switch-off timeout (minutes): Select the time, in minutes, before the AC unit turns off.

Possible values:

- 0 .. 180'
- **Default**: 60'

6.9. Binary Inputs Configuration

6.9.1. Enable Use of Input 1, 2, 3, and 4

IMPORTANT
The gateway supports up to four binary inputs, but this value may be limited to two in some brands.

Select **Yes** to enable the use of that input and the **Status_ InX**[1] communication object for that input.

NOTICE
[1] **X** indicates the number of the binary input: Status_ In1, Status_ In2, Status_ In3, or Status_ In4.

NOTE
This object changes depending on the **Function** parameter configuration. For example:

Object for Function: Switching:

Status_ In1 - Switching [DPT_ 1.001 - 1 bit] - 0-Of; 1-On

Objects for Function: Shutter/Blind:

Status_ In1 - Shut/Blind - Step [DPT_1.008 - 1bit] - 0-Step Up; 1-Step Down

Status_ In1 - Shut/Blind - Step [DPT_1.008 - 1bit] - 0-Move Up; 1-Move Down

For more information, see Function (page 37).

Also, new parameters appear:

6.9.2. Contact Type

Choose the behavior of the binary input depending on the contact type.

Possible values

- **NO: Normally Open**: The contact is normally open.
- **NC: Normally Closed**: The contact is normally closed.

6.9.3. Debounce Time

Choose a debounce time (in milliseconds) that will be applied to the contact.

Possible values:

- 0 .. 250 ms
- **Default**: 50 ms

6.9.4. Disabling Function

This parameter enables/disables the **Control_ Disable Input X** communication object.

Possible values:

- **No**: The **Control_ Disable Input X** object is not shown (Default value).
- **DPT 1.003: 0-Disable; 1-Enable**: The input is disabled using the value **0** and enabled using the value **1**.
- **DPT 1.002: 1-True (Disable); 0-False (Enable)**: The input is disabled using the value **1** and enabled using the value **0**.

6.9.5. Function

You can choose the function of the binary input. There are seven different functions available: Switching, Dimming, Shutter/Blind, Value, Execute Scene (internal), Occupancy (internal), and Window Contact (internal).

6.9.5.1. Function: Switching

The **Status_ InX - Switching [DPT_ 1.001 - 1bit]** communication object is enabled. Also, you can configure these parameters:

> Send telegram after bus recovery: Select if the binary input X sends a telegram or not after a bus recovery and the type of telegram it sends (if enabled).

Possible values:

- **No action**: No telegram is sent after a bus recovery (Default value).
- **Current status**: The binary input sends a telegram with its current status after a bus recovery. Also, a new parameter appears (see below).
- **On**: The binary input sends a telegram with a value of **1** after a bus recovery. Also, a new parameter appears (see below).
- **Off**: The binary input sends a telegram with a value of **0** after a bus recovery. Also, a new parameter appears:

> Sending delay after a bus recovery (seconds): Set a delay, in seconds, before sending a telegram after a bus recovery.

Possible values:

- 0 .. 255 sec
- **Default**: 10 sec

> Value on rising edge: Select the value that the binary input X sends on a rising edge (contact activated).

Possible values:

- **On**: The binary input sends telegrams with a value of **1**.
- **Off**: The binary input sends telegrams with a value of **0**.
- **Toggle (On/Off)**: The binary input sends a value of **1** after a value of **0** and vice versa.
- **No action**: The binary input performs no action (Default value).

> Value on falling edge: Select the value that the binary input X sends on a falling edge (contact deactivated).

Possible values:

- **On**: The binary input sends telegrams with a value of **1**.

- **Off**: The binary input sends telegrams with a value of **0**.
- **Toggle (On/Off)**: The binary input sends a value of **1** after a value of **0** and vice versa.
- **No action**: The binary input performs no action (Default value).

> Cyclical sending: Enable/disable cyclical sending for determined conditions.

Possible values:

- **When output value is On**: If a value of **1** is sent, it is sent cyclically. Also, a new parameter appears (see below).
- **When output value is Off**: If a value of **0** is sent, it is sent cyclically. Also, a new parameter appears (see below).
- **Always**: The binary input sends any value cyclically. Also, a new parameter appears (see below).
- **Never**: Cyclical sending is disabled (Default value).

> Period for cyclical sending (seconds): Set the time, in seconds, for the cyclical sending.

Possible values:

- 1 .. 65535 sec
- **Default**: 10 sec

6.9.5.2. Function: Dimming

Select this function to enable the **Status_ InX - Dimming - On/Off [DPT_ 1.001 - 1bit]** and **Status_ InX - Dimming - Step(%) [DPT_ 3.007 - 4bit]** communication objects. Also, you can configure these parameters:

> Send telegram after bus recovery: Select if the binary input X sends a telegram or not after a bus recovery and the type of telegram it sends (if enabled).

Possible values:

- **No action**: No telegram is sent after a bus recovery (Default value).
- **On**: The binary input sends a telegram with a value of **1** after a bus recovery. Also, a new parameter appears (see below).
- **Off**: The binary input sends a telegram with a value of **0** after a bus recovery. Also, a new parameter appears:

> Sending delay after a bus recovery (seconds): Set a delay, in seconds, before sending a telegram after a bus recovery.

Possible values:

- 0 .. 255 sec
- **Default**: 10 sec

> Mode for short (long) operation: Select the value that the binary input X sends on a rising edge (contact activated) for a short and a long operation.

Possible values:

- **On (increase)**: The binary input sends telegrams with a value of **1** for a short operation, and an **increase step** for a long operation.
- **Off (decrease)**: The binary input sends telegrams with a value of **0** for a short operation, and a **decrease step** for a long operation.
- **Toggle: On/Off (increase/decrease)** (Default value):
  - For the short operation, the binary input sends a value of **1** after a **0** value and vice versa.
  - For the long operation, the binary input sends an **increase step** after a **decrease step** and vice versa.

NOTICE
The first long operation in toggle depends on the last short operation, i.e., after a value of **1** a **decrease step** is sent, and after a value of **0** an **increase step** is sent.

NOTICE
The time period between a short and a long operation is defined in the parameter **Short/long operation limit (x100ms)** explained below.

> Increasing step: Select the increasing step value (in %) sent for a long operation.

Possible values

- + 100%
- + 50%
- + 25% (Default value)
- + 12.5%
- + 6.25%
- + 3.125%
- + 1.5625%

> Decreasing step: Select the decreasing step value (in %) sent for a long operation.

Possible values

- - 100%
- - 50%
- - 25% (Default value)
- - 12.5%
- - 6.25%
- - 3.125%
- - 1.5625%

> Short/long operation limit (x100ms): Set the time period difference, in milliseconds, for the short and the long operation.

Possible values

- 1 .. 255 ms
- **Default**: 10 ms

> Cycl. send. period in long oper. (x100ms): Set a time, in seconds, for the cyclical sending of a long operation.

Possible values

- 0: No cyclical sending (Default value)
- 1 .. 255 sec

6.9.5.3. Function: Shutter/Blind

Select this function to enable the **Status_ InX - Shut/Blind - Step [DPT_ 1.008 - 1bit]** and **Status_ InX - Shut/Blind - Move [DPT_ 1.008 - 1bit]** communication objects. Also, you can configure these parameters:

> Send telegram after bus recovery: Select if the binary input X sends a telegram or not after a bus recovery and the type of telegram it sends (if enabled).

Possible values:

- **Move up**: The binary input sends a telegram with a value of **0** after a bus recovery. Also, a new parameter appears (see below).
- **Move down**: The binary input sends a telegram with a value of **1** after a bus recovery. Also, a new parameter appears (see below).
- **No action** (Default value): No telegram is sent after a bus recovery. Also, a new parameter appears:

> Sending delay after a bus recovery (seconds): Set a delay, in seconds, before sending a telegram after a bus recovery.

Possible values:

- 0 .. 255 sec
- **Default**: 10 sec

> Operation: Select the value that the binary input X sends on a rising edge (contact activated).

Possible values:

- **Up**: The binary input sends telegrams with a value of **0**.
- **Down**: The binary input sends telegrams with a value of **1**.
- **Toggle (Up/Down)** (Default value): The binary input sends a value of **0** after a value of **1** and vice versa.

> Method: Select the working method for the shutter/blind.

Possible values:

- **Step-Move-Step** (Default value): On a rising edge (contact activated) a step/stop telegram is sent and a time called **T1** starts. If a falling edge occurs (contact deactivated) during **T1**, no action is performed.
  If the rising edge lasts more than **T1**, a move telegram is sent and a time called **T2** starts. If a falling edge occurs during **T2**, a step/stop telegram is sent. If a falling edge occurs after **T2**, no action is performed.
- **Move-Step**: On a rising edge a move telegram is sent and **T2** starts. If a falling edge occurs during **T2**, a step/stop telegram is sent. If a falling edge occurs after **T2**, no action is performed.

> **NOTICE**
> **T1** time is defined in the **Short/long operation limit (x100ms)** parameter explained below.
>
> **T2** time is defined in the **Vanes adjustment time (x100ms)** parameter explained below.

> Short/long operation limit (x100ms): Set the time period difference, in milliseconds, for the short and the long operation (T1 time).

Possible values:

- 1 .. 255 ms
- **Default**: 10 ms

> Vanes adjustment time (x100ms)

Possible values:

- 1 .. 255 ms
- **Default**: 10 ms

6.9.5.4. Function: Value

Select this function to enable the **Status_ InX - Value [DPT_ 5.010 - 1byte]** communication object. Also, you can configure these parameters:

> Send telegram after bus recovery: Select if the binary input X sends a telegram or not after a bus recovery and the type of telegram it sends (if enabled).

Possible values:

- **No action** (Default value): No telegram is sent after a bus recovery.
- **Fixed value**: The binary input sends a telegram with the same value configured in the **Value on rising edge** parameter explained below. Also, a new parameters appears:

> Sending delay after a bus recovery (seconds): Set a delay, in seconds, before sending a telegram after a bus recovery.

Possible values:

- 0 .. 255 sec
- **Default**: 10 sec

> DPT to be sent: Select the DPT type for the value defined in the next parameter. This value is sent when a rising edge occurs (contact activated).

Possible values:

- DPT 5.010 (1byte) (Default value)
- DPT 7.001 (2byte)
- DPT 8.001 (2byte)
- DPT 9.001 (2byte)
- DPT 12.001 (4byte)

> Value on rising edge: Select the value that the binary input X sends on a rising edge (contact activated).

Possible values depending on the DPT type:

- 0 .. 255 for DPT_ 5.010 (1byte)
- 0 .. 65535 for DPT_ 7.001 (2byte)
- -32768 .. 32767 for DPT_ 8.001 (2byte)
- -2730 .. 3276 for DPT_ 5.010 (1byte)
- 0 .. 4294967295 for DPT_ 12.001 (4byte)

6.9.5.5. Function: Execute Scene 1 (Internal)

When selecting this function, the binary input X object activates the scene defined in the next parameter, on a rising edge (contact activated).

> Scene when contact is activated: Choose which scene activates when a rising edge occurs.

IMPORTANT
Set this scene as a preset scene in the **Scene Configuration** function. See Scene n Preset (AC Units) (page 31).

6.9.5.6. Function: Occupancy (Internal)

When this function is selected, the binary input X object behaves as it is configured in the Switch Off Timeouts Configuration function. See Enable Use of Occupancy Function (page 34).

6.9.5.7. Function: Window Contact (Internal)

When this function is selected, the binary input X object behaves as it is configured in the Switch Off Timeouts Configuration function. See Enable Use of Open Window / Switch Off Timeout Function (page 33).

7. Configuration Parameters for Type of Unit: LOSSNAY Unit

NOTICE
The following sections cover the configuration for the Lossnay series units.

For air conditioning units, please read the sections under Configuration Parameters for Type of Unit: AC Unit (page 14).

7.1. Lossnay Ventilation Mode Configuration

7.1.1. Enable Use of Bit-type Ventilation Mode Objects (for Control)

Select **Yes** to enable the following 1 bit-type objects:

- Control_ Mode Ventilation Auto [DPT_1.002 - 1bit]
- Control_ Mode Ventilation HeatEx [DPT_1.002 - 1bit]
- Control_ Mode Ventilation Bypass [DPT_1.002 - 1bit]

NOTE
Set the value to **1** to activate each object.

7.1.2. Enable Use of Bit-type Ventilation Mode Objects (for Status)

Select **Yes** to enable the following 1 bit-type objects:

- Status_ Mode Ventilation Auto [DPT_1.002 - 1bit]
- Status_ Mode Ventilation HeatEx [DPT_1.002 - 1bit]
- Status_ Mode Ventilation Bypass [DPT_1.002 - 1bit]

NOTE
Each mode will return a **1** through its bit-type object.

7.1.3. Enable Use of +/- Object for Ventilation Mode

Select **Yes** to enable the **Control_ Ventilation Mode +/-** communication object. This object allows you to change the Lossnay unit mode by using two different datapoint types:

- 0-Decrease / 1-Increase [DPT_1.007]
- 0-Up / 1-Down [DPT_1.008]

Figure 7. Sequence performed when using this object

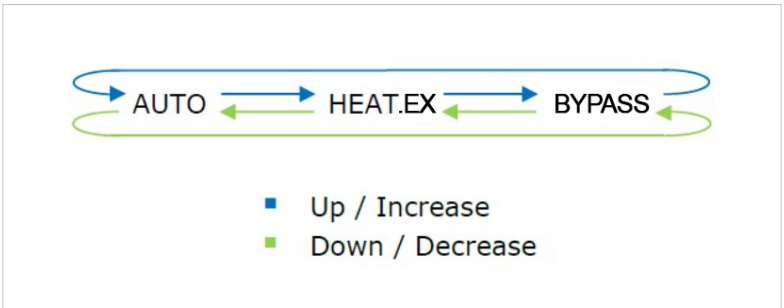

7.1.4. Enable Use of Text Object for Ventilation Mode

Select **Yes** to enable the **Status_ Mode Text** communication object. This mode allows you to modify the text string displayed for each mode (AUTO, BYPASS, and HEATEX).

NOTICE
Each text allows up to 14 characters.

7.2. Lossnay Fan Speed Configuration

7.2.1. Fan is Accessible in Lossnay Unit

NOTE
Read the documentation of your Lossnay unit to check if it allows this mode.

This parameter indicates if the unit has fan speed control available or not.

Possible values:

- **No**: The Lossnay unit does not allow fan speed control. The parameters for this function are not shown.
- **Yes**: The Lossnay unit allows fan speed control. The parameters for this function are shown.

7.2.2. Available Fanspeeds in Lossnay Unit

NOTE
Read the documentation of your Lossnay unit to check how many fan speeds are available.

Select how many fan speeds are available in the indoor unit.

Possible values

- 3, 4
- **Default**: 4

7.2.3. DPT Object Type for Fanspeed

NOTE
Read the documentation of your indoor unit to check how many fan speeds are available.

Change de DPT for the Control_ Fan Speed and Status_ Fan Speed byte-type communication objects:

- **Scaling [DPT_5.001]**: The values for Control_ and Status_ objects are shown in % and vary depending on the available fan speeds and the fan speed currently selected.

  NOTE
  Formulas for the thresholds:

  - Control_ object: 100×(n+0.5)/N
  - Status_ object: 100×(n/N)
    Where:
    n: current fan speed selected.
    N: total number of fan speeds available.

Table 4. Values sent to the Control_ object and returned by the Status_ object

Available fan speeds	Values for fan speed 1	Values for fan speed 2	Values for fan speed 3	Values for fan speed 4	Values for fan speed 5
2	Control_: 0-74% Status_: 50%	Control_: 75-100% Status_: 100%	-	-	-
3	Control_: 0-49% Status_: 33%	Control_: 50-82% Status_: 67%	Control_: 83-100% Status_: 100%	-	-
4	Control_: 0-37% Status_: 25%	Control_: 38-62% Status_: 50%	Control_: 63-87% Status_: 75%	Control_: 88-100% Status_: 100%	-
5	Control_: 0-29% Status_: 20%	Control_: 30-49% Status_: 40%	Control_: 50-69% Status_: 60%	Control_: 70-89% Status_: 80%	Control_: 90-100% Status_: 100%

- **Enumerated [DPT 5.010]**: The values for Control_ and Status_ objects are shown in numbers 1 to 5, depending on the available fan speeds.
  Possible values:
  - **0**: Fan speed 1 is selected
  - **1 .. 5**: Fan speed 1 to 5 is selected
  - **> 5**: Fan speed 5 is selected

7.2.4. Enable Use of Bit-type Fan Speed Objects (for Control)

Select **Yes** to enable **Control_ Fan Speed 1** to **Control_ Fan Speed 4** 1 bit-type objects.

NOTE
Send a value of **1** to activate each one of these objects.

7.2.5. Enable Use of Bit-type Fan Speed Objects (for Status)

Select **Yes** to enable **Status_ Fan Speed 1** to **Status_ Fan Speed 4** 1 bit-type object.

NOTE
When one of these fan speeds is enabled, a value of **1** is returned through this bit-type object.

7.2.6. Enable Use of +/- Object for Fan Speed

Select **Yes** to enable the **Control_ Fan Speed +/-** communication object. Also, three more parameters appear:

> DPT type for +/- Fan Speed object: Choose between two datapoint types to increase/decrease the Lossnay unit fan speed:

- 0-Decrease / 1-Increase [DPT_1.007]
- 0-Up / 1-Down [DPT_1.008]

> Rollover Speed at upper/lower limit

Possible values:

- **Yes** (Default value): Rollover is enabled. The next fan speed after the maximum one is the minimum one and vice versa, allowing a cyclic sequence.

  NOTE
  See the blue arrow and the green arrow surrounding the fan speeds in the picture below.

- **No**: Rollover is disabled. The maximum and minimum fan speeds are limits for the allowed forward and backward sequence.

NOTE
See the green and blue arrows between each fan speed in the picture below.

Figure 8. Sequence performed depending on the rollover activation

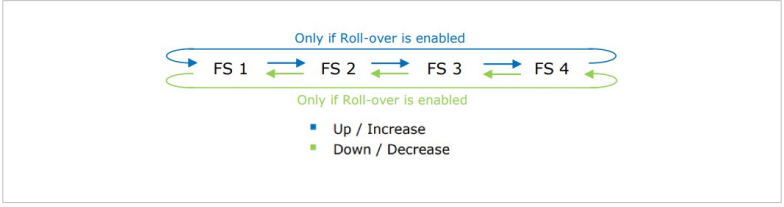

7.2.7. Enable Use of Text Object for Fan Speed

Select **Yes** to enable the **Status_ Fan Speed Text** communication object.

NOTE
Also, a new parameter for each fan speed appears, allowing you to modify the text string displayed by the **Status_ Fan Speed Text** when changing the fan speed.

NOTICE
Each text allows up to 14 characters.

7.3. Scene Configuration (Lossnay Units)

NOTE
A scene contains values about: On/Off, Ventilation Mode, Fan speed, and Value for Remote Lock.

7.3.1. Enable Use of Scenes

Select **Yes** to enable the **Control_ Execute Scene** communication object and to open the scene configuration parameters.

Possible values

- **0**: Execute scene 1
- **1**: Execute scene 2
- **3**: Execute scene 4
- **4**: Execute scene 5

7.3.2. Scenes can be Stored from KNX Bus

Select **Yes** to enable the **Control_ Save/Exec Scene** communication object.

NOTE
This object substitutes the **Control_ Execute Scenes** object.

Possible values for Control_ Save/Exec Scenes:

- **128**: Save scene 1
- **129**: Save scene 2
- **130**: Save scene 3

- **131**: Save scene 4
- **132**: Save scene 5

Also, a new parameter appears:

> Enable use of bit objects for storing scenes (from bus)

Select **Yes** to enable the **Control_ Store Scene 1** to **Control_ Store Scene 5** communication objects.

NOTE
Send a value of **1** to save each scene, i.e., send a **1** to the **Control_ Store Scene 4** to save scene 4.

7.3.3. Enable Use of Bit Objects for Scene Execution

Select **Yes** to enable the **Control_ Execute Scene 1** to **Control_ Execute Scene 5** bit-type communication objects.

NOTE
Send a value of **1** to execute each scene, i.e., send a **1** to **Control_ Execute Scene 4** to execute scene 4.

7.3.4. Scene n Preset (Lossnay Units)

NOTE
For the INKNXMIT001I100 gateway you can preset up to five scenes.

Select **Yes** to enable a preset for a scene. When a scene is executed, the values configured in the preset apply.

IMPORTANT
When enabling a preset for a scene, that scene is not modifiable from the KNX bus.

> Scene n / Value for On-Off: Choose the power status of the Lossnay unit when the scene is executed.

Possible values

- ON
- OFF
- (unchanged) (Default value)

> Scene n / Value for Ventilation Mode: Choose the ventilation mode of the Lossnay unit when the scene is executed.

Possible values

- AUTO
- HEATEX
- BYPASS
- (unchanged) (Default value)

> Scene n / Value for Fan speed (if available): Choose the fan speed of the Lossnay unit when the scene is executed.

Possible values

- FAN SPEED 1

- FAN SPEED 2
- FAN SPEED 3
- FAN SPEED 4
- (unchanged) (Default value)

> Scene n / Value for Remote Lock: Choose the remote controller status of the Lossnay unit when the scene is executed.

Possible values

- Locked (remote not allowed)
- Unlocked (remote allowed)
- (unchanged) (Default value)

7.4. Occupancy and Switch-Off Timeouts Configuration for Lossnay

These parameters are the same as per AC unit type. See Occupancy and Switch-Off Timeouts Configuration (page 33).

7.5. Binary Inputs Configuration for Lossnay

These parameters are the same as per AC unit type. See Binary Inputs Configuration (page 36).

8. Communication Objects

In the following table you can check every object and how to set it up through ETS Database.

NOTE
All objects for both AC units and Lossnay units are listed.

For an extended explanation of each ETS parameter, see ETS Parameters (page 10).

NOTICE
Communication object flags:

- **Ri (Read on initialization)**: The gateway requests this signal's updated data after an initialization instead of waiting for a change in the signal.
- **R**: The KNX system can read this signal.
- **W**: The KNX system can write this signal.
- **T**: The KNX system receives a telegram when this signal changes its value.
- **U**: This signal's data is updated after a reboot of either the gateway or the bus.

Object #	Unit type	Name	Function	Length	Data type	Flags
0	AC + Lossnay	Control_ On/Off	0: Off 1: On	1 bit	1.001 switch	W, T
1	AC	Control_ Mode	0: Auto 1: Heat 3: Cool 9: Fan 14: Dry	1 byte	20.105 HVAC control mode	W, T
2	AC	Control_ Mode Cool/Heat	0: Cool 1: Heat	1 bit	1.001 switch	W, T
3	AC	Control_ Mode Cool & On	0%: Off 0.1 .. 100%: On + Cool	1 byte	5.001 percentage	W, T
4	AC	Control_ Mode Heat & On	0%: Off 0.1 .. 100%: On + Heat	1 byte	5.001 percentage	W, T
5	AC	Control_ Mode Auto	1: Set AUTO mode	1 bit	1.002 boolean	W, T
6	AC	Control_ Mode Heat	1: Set HEAT mode	1 bit	1.002 boolean	W, T
7	AC	Control_ Mode Cool	1: Set COOL mode	1 bit	1.002 boolean	W, T
8	AC	Control_ Mode Fan	1: Set FAN mode	1 bit	1.002 boolean	W, T
9	AC	Control_ Mode Dry	1: Set DRY mode	1 bit	1.002 boolean	W, T
10	AC	Control_ Mode +/- *Two options depending on the data type*	0: Decrease 1: Increase	1 bit	1.007 step	W
			0: Up 1: Down	1.008 up/ down	1 bit	W
11	Lossnay	Control_ Ventilation Mode	0: Auto 1: HeatEx 2: Bypass	1 byte	20.xxx	W, T
12	Lossnay	Control_ Mode Ventilation Auto	1: Set AUTO ventilation mode	1 bit	1.002 boolean	W, T
13	Lossnay	Control_ Mode Ventilation HeatEx	1: Set HEATEX ventilation mode	1 bit	1.002 boolean	W, T

Object #	Unit type	Name	Function	Length	Data type	Flags
14	Lossnay	Control_ Mode Ventilation Bypass	1: Set BYPASS ventilation mode	1 bit	1.002 boolean	W, T
15	Lossnay	Control_ Ventilation Mode +/-	0: Decrease 1: Increase	1 bit	1.007 step	W
			0: Up 1: Down	1.008 up/ down	1 bit	W
16	AC + Lossnay	Control_ Fan Speed / 5 Speeds (*for AC units*) Control_ Fan Speed / 4 Speeds (*for Lossnay units*) *Two options depending on the data type*	Thresholds: [100x(n+0.5)/N]%	1 byte	5.001 percentage	W, T
			1: Fan Speed 1 2: Fan Speed 2 3: Fan Speed 3 4: Fan Speed 4 5: Fan Speed 5 (*for AC units only*)	5.010 counter pulses	1 byte	W, T
17	AC	Control_ Fan Speed Man/Auto	0: Manual 1: Auto	1 bit	1.002 boolean	W, T
18	AC + Lossnay	Control_ Fan Speed 1	1: Set Fan Speed 1	1 bit	1.002 boolean	W, T
19	AC + Lossnay	Control_ Fan Speed 2	1: Set Fan Speed 2	1 bit	1.002 boolean	W, T
20	AC + Lossnay	Control_ Fan Speed 3	1: Set Fan Speed 3	1 bit	1.002 boolean	W, T
21	AC + Lossnay	Control_ Fan Speed 4	1: Set Fan Speed 4	1 bit	1.002 boolean	W, T
22	AC	Control_ Fan Speed 5	1: Set Fan Speed 5	1 bit	1.002 boolean	W, T
23	AC + Lossnay	Control_ Fan Speed +/- *Two options depending on the data type*	0: Decrease 1: Increase	1 bit	1.007 step	W
			0: Up 1: Down	1.008 up/ down	1 bit	W
24	AC	Control_ Vanes U-D / 5 Pos *Two options depending on the data type*	Thresholds: [100x(n+0.5)/N]%	1 byte	5.001 percentage	W, T
			1: Position 1 2: Position 2 3: Position 3 4: Position 4 5: Position 5	5.010 counter pulses	1 byte	W, T
25	AC	Control_ Vanes U-D Man/Auto	0: Manual 1: Auto	1 bit	1.002 boolean	W, T
26	AC	Control_ Vanes U-D Pos 1	1: Set Position 1	1 bit	1.002 boolean	W, T
27	AC	Control_ Vanes U-D Pos 2	1: Set Position 2	1 bit	1.002 boolean	W, T
28	AC	Control_ Vanes U-D Pos 3	1: Set Position 3	1 bit	1.002 boolean	W, T
29	AC	Control_ Vanes U-D Pos 4	1: Set Position 4	1 bit	1.002 boolean	W, T
30	AC	Control_ Vanes U-D Pos 5	1: Set Position 5	1 bit	1.002 boolean	W, T
31	AC	Control_ Vanes U-D Swing	0: Off 1: Swing	1 bit	1.002 boolean	W, T
32	AC	Control_ Vanes U-D +/- *Two options depending on the data type*	0: Decrease 1: Increase	1 bit	1.007 step	W, T
			0: Up 1: Down	1.008 up/ down	1 bit	W, T
33	AC	Control_ Vanes L-R / 6 Pos *Two options depending on the data type*	Thresholds: [100x(n+0.5)/N]%	1 byte	5.001 percentage	W, T

Object #	Unit type	Name	Function	Length	Data type	Flags
			1: Position 1 2: Position 2 3: Position 3 4: Position 4 5 Position 5 6: Position 6	5.010 counter pulses	1 byte	W, T
34	AC	Control_ Vanes L-R Pos 1	1: Set Position 1	1 bit	1.002 boolean	W, T
35	AC	Control_ Vanes L-R Pos 2	1: Set Position 2	1 bit	1.002 boolean	W, T
36	AC	Control_ Vanes L-R Pos 3	1: Set Position 3	1 bit	1.002 boolean	W, T
37	AC	Control_ Vanes L-R Pos 4	1: Set Position 4	1 bit	1.002 boolean	W, T
38	AC	Control_ Vanes L-R Pos 5	1: Set Position 5	1 bit	1.002 boolean	W, T
39	AC	Control_ Vanes L-R Pos 6	1: Set Position 6	1 bit	1.002 boolean	W, T
40	AC	Control_ Vanes L-R Swing	0: Off 1: Swing	1 bit	1.002 boolean	W, T
41	AC	Control_ Vanes L-R +/- *Two options depending on the data type*	0: Decrease 1: Increase	1 bit	1.007 step	W, T
			0: Up 1: Down	1.008 up/ down	1 bit	W, T
42	AC	Control_ Setpoint Temperature	°C	2 byte	9.001 temperature (°C)	W, T
43	AC	Control_ Setpoint Temp +/- *Two options depending on the data type*	0: Decrease 1: Increase	1 bit	1.007 step	W, T
			0: Up 1: Down	1.008 up/ down	1 bit	W, T
44	AC	Control_ Ambient Temperature	°C	2 byte	9.001 temperature (°C)	W, T
45	AC + Lossnay	Control_ Window Contact Status	0: Open 1: Closed	1 bit	1.009 open/close	W, T
	AC + Lossnay	Control_ Switch Off TImeout	0: Stop Lossnay	1 bit	1.010 start/stop	W, T
46	AC + Lossnay	Control_ Occupancy	0: Not occupied 1: Occupied	1 bit	1.018 occupancy	W, T
47	AC + Lossnay	Control_ Sleep Timeout	0: Stop 1: Start	1 bit	1.010 start/stop	W, T
48	AC + Lossnay	Control_ Lock Remote Control	0: Unlocked 1: Locked	1 bit	1.002 boolean	W, T
49	AC + Lossnay	Control_ Lock Control Objects	0: Unlock 1: Locked	1 bit	1.002 boolean	W, T
50	AC	Control_ Power Mode	0: Stop 1: Start	1 bit	1.010 start/stop	W, T
51	AC	Control_ Econo Mode	0: Stop 1: Start	1 bit	1.010 start/stop	W, T
52	AC	Control_ Additional Heat	0: Stop 1: Start	1 bit	1.010 start/stop	W, T
53	AC	Control_ Additional Cool	0: Stop 1: Start	1 bit	1.010 start/stop	W, T
54	AC + Lossnay	Control_ Save/Exec Scene	0 .. 4: Execute scene 1 .. 5 128 .. 132: Save scene 1 .. 5	1 byte	17.001 scene number	W, T
55	AC + Lossnay	Control_ Store Scene 1	1: Store Scene 1	1 bit	1.002 boolean	W
56	AC + Lossnay	Control_ Store Scene 2	1: Store Scene 2	1 bit	1.002 boolean	W
57	AC + Lossnay	Control_ Store Scene 3	1: Store Scene 3	1 bit	1.002 boolean	W

Object #	Unit type	Name	Function	Length	Data type	Flags
58	AC + Lossnay	Control_ Store Scene 4	1: Store Scene 4	1 bit	1.002 boolean	W
59	AC + Lossnay	Control_ Store Scene 5	1: Store Scene 5	1 bit	1.002 boolean	W
60	AC + Lossnay	Control_ Execute Scene 1	1: Execute Scene 1	1 bit	1.002 boolean	W, T
61	AC + Lossnay	Control_ Execute Scene 2	1: Execute Scene 2	1 bit	1.002 boolean	W, T
62	AC + Lossnay	Control_ Execute Scene 3	1: Execute Scene 3	1 bit	1.002 boolean	W, T
63	AC + Lossnay	Control_ Execute Scene 4	1: Execute Scene 4	1 bit	1.002 boolean	W, T
64	AC + Lossnay	Control_ Execute Scene 5	1: Execute Scene 5	1 bit	1.002 boolean	W, T
69	AC + Lossnay	Status_ On/Off	0: Off 1: On	1 bit	1.001 switch	R, T
70	AC	Status_ Mode	0: Auto 1: Heat 3: Cool 9: Fan 14: Dry	1 byte	20.105 HVAC control mode	R, T
71	AC	Status_ Mode Cool/Heat	0: Cool 1: Heat	1 bit	1.100 cooling/ heating	R, T
72	AC	Status_ Mode Auto	1: AUTO mode is active	1 bit	1.002 boolean	R, T
73	AC	Status_ Mode Heat	1: HEAT mode is active	1 bit	1.002 boolean	R, T
74	AC	Status_ Mode Cool	1: COOL mode is active	1 bit	1.002 boolean	R, T
75	AC	Status_ Mode Fan	1: FAN mode is active	1 bit	1.002 boolean	R, T
76	AC	Status_ Mode Dry	1: DRY mode is active	1 bit	1.002 boolean	R, T
77	AC	Status_ Mode Text	ASCII string	14 byte	16.001 character string	R, T
78	Lossnay	Status_ Ventilation Mode	0: Auto 1: HeatEx 2: Bypass	1 byte	20.xxx	R, T
79	Lossnay	Status_ Ventilation Mode Auto	1: AUTO ventilation mode is active	1 bit	1.002 boolean	R, T
80	Lossnay	Status_ Ventilation Mode HeatEx	1: HEATEX ventilation mode is active	1 bit	1.002 boolean	R, T
81	Lossnay	Status_ Ventilation Mode Bypass	1: BYPASS ventilation mode is active	1 bit	1.002 boolean	R, T
82	Lossnay	Status_ Ventilation Mode Text	ASCII String	1 bit	1.002 boolean	R, T
83	AC + Lossnay	Status_ Fan Speed / 5 Speeds (*for AC units*) Status_ Fan Speed / 4 Speeds (*for Lossnay units*) *Two options depending on the data type*	Thresholds: [100x(n+0.5)/N]%	1 byte	5.001 percentage	R, T
			1: Fan Speed 1 2: Fan Speed 2 3: Fan Speed 3 4: Fan Speed 4 5: Fan Speed 5 (*for AC units only*)	5.010 counter pulses	1 byte	R, T
84	AC	Status_ Fan Speed Man/Auto	0: Manual 1: Auto	1 bit	1.002 boolean	R, T
85	AC + Lossnay	Status_ Fan Speed 1	1: Fan in speed 1	1 bit	1.002 boolean	R, T
86	AC + Lossnay	Status_ Fan Speed 2	1: Fan in speed 2	1 bit	1.002 boolean	R, T
87	AC + Lossnay	Status_ Fan Speed 3	1: Fan in speed 3	1 bit	1.002 boolean	R, T
88	AC + Lossnay	Status_ Fan Speed 4	1: Fan in speed 4	1 bit	1.002 boolean	R, T
89	AC	Status_ Fan Speed 5	1: Fan in speed 5	1 bit	1.002 boolean	R, T
90	AC + Lossnay	Status_ Fan Speed Text	ASCII String	14 byte	16.001 chracter string	R, T
91	AC	Status_ Vanes U-D / 5 pos	Thresholds: [100x(n+0.5)/N]%	1 byte	5.001 percentage	R, T

Object #	Unit type	Name	Function	Length	Data type	Flags
		Two options depending on the data type	1: Position 1 2: Position 2 3: Position 3 4: Position 4 5: Position 5	5.010 counter pulses	1 byte	R, T
92	AC	Status_ Vanes U-D Man/Auto	0: Manual 1: Auto	1 bit	1.002 boolean	R, T
93	AC	Status_ Vanes U-D Pos 1	1: Vanes in Position 1	1 bit	1.002 boolean	R, T
94	AC	Status_ Vanes U-D Pos 2	1: Vanes in Position 2	1 bit	1.002 boolean	R, T
95	AC	Status_ Vanes U-D Pos 3	1: Vanes in Position 3	1 bit	1.002 boolean	R, T
96	AC	Status_ Vanes U-D Pos 4	1: Vanes in Position 4	1 bit	1.002 boolean	R, T
97	AC	Status_ Vanes U-D Pos 5	1: Vanes in Position 5	1 bit	1.002 boolean	R, T
98	AC	Status_ Vanes U-D Swing	0: Off 1: Swing	1 bit	1.002 boolean	R, T
99	AC	Status_ Vanes U-D Text	ASCII String	14 byte	16.001 character string	R, T
100	AC	Status_ Vanes L-R / 6 Pos *Two options depending on the data type*	Thresholds: [100x(n+0.5)/N]%	1 byte	5.001 percentage	R, T
			1: Position 1 2: Position 2 3: Position 3 4: Position 4 5: Position 5 6: Position	5.010 counter pulses	1 byte	R, T
101	AC	Status_ Vanes L-R Pos 1	1: Vanes in Position 1	1 bit	1,002 boolean	R, T
102	AC	Status_ Vanes L-R Pos 2	1: Vanes in Position 2	1 bit	1,002 boolean	R, T
103	AC	Status_ Vanes L-R Pos 3	1: Vanes in Position 3	1 bit	1,002 boolean	R, T
104	AC	Status_ Vanes L-R Pos 4	1: Vanes in Position 4	1 bit	1,002 boolean	R, T
105	AC	Status_ Vanes L-R Pos 5	1: Vanes in Position 5	1 bit	1,002 boolean	R, T
106	AC	Status_ Vanes L-R Pos 6	1: Vanes in Position 6	1 bit	1,002 boolean	R, T
107	AC	Status_ Vanes L-R Swing	0: Off 1: Swing	1 bit	1,002 boolean	R, T
108	AC	Status_ Vanes L-R Text	ASCII String	14 byte	16.001 character string	R, T
109	AC	Status_ AC Setpoint Temp	°C	2 byte	9.001 temperature	R, T
110	AC	Status_ AC Return Temperature	°C	2 byte	9.001 temperature	R, T
111	Lossnay	Status_ Outdoor Temperature	°C	2 byte	9.001 temperature	R, T
112	Lossnay	Status_ Indoor Temperature	°C	2 byte	9.001 temperature	R, T
113	AC + Lossnay	Status_ Error/Alarm	0: No alarm 1: Alarm	1 bit	1.005 alarm	R, T
114	AC + Lossnay	Status_ Error Code	0: No error Any other value: See the AC unit user manual	2 byte	Unsigned value	R, T
115	AC + Lossnay	Status_ Error Text Code	Empty: No error XXXX: AC unit error	14 byte	16.001 character string	R, T
116	AC	Status_ Power Mode	0: Off 1: On	1 bit	1.001 switch	R, T
117	AC	Status_ Econo Mode	0: Off 1: On	1 bit	1.001 switch	R, T
118	AC	Status_ Additional Heat	0: Off 1: On	1 bit	1.001 switch	R, T

Object #	Unit type	Name	Function	Length	Data type	Flags
119	AC	Status_ Additional Cool	0: Off 1: On	1 bit	1.001 switch	R, T
120	AC + Lossnay	Status_ Operation Hour Counter	Number of operating hours	2 byte	7.001 pulses	R, T
121	AC + Lossnay	Status_ Current Scene	0 .. 4: Scene X+1 63: No Scene	1 byte	17.001 scene number	R, T
122*	AC + Lossnay	Status_ In1 - Switching Status_ In1 - Dimming - On/Off	0: Off 1: On	1 bit	1.001 switch	R, T
		Status_ In1 - Shut/Blind - Step	1 bit	0: Step Up 1: Step Down	1.008 up/down	R, T
123*	AC + Lossnay	Status_ In1 - Dimming - Step(%)	Dimming step	4 bit	3.007 dimming control	R, T
		Status_ In1 - Shut/Blind - Move	1 bit	0: Move Up 1: Move Down	1.008 up/down	R, T
		Status_ In1 - Value	1 byte	0 .. 255	Unsigned value	R, T
124*	AC + Lossnay	Status_ In2 - Switching Status_ In2 - Dimming - On/Off	0: Off 1: On	1 bit	1.001 switch	R, T
		Status_ In2 - Shut/Blind - Step	1 bit	0: Step Up 1: Step Down	1.008 up/down	R, T
125*	AC + Lossnay	Status_ In2 - Dimming - Step (%)	Dimming step	4 bit	3.007 dimming control	R, T
		Status_ In2 - Shut/Blind - Move	1 bit	0: Move Up 1: Move Down	1.008 up/down	R, T
		Status_ In2 - Value	1 byte	0 .. 255	Unsigned value	R, T
126*	AC + Lossnay	Status_ In3 - Switching Status_ In3 - Dimming - On/Off	0: Off 1: On	1 bit	1.001 switch	R, T
		Status_ In3 - Shut/Blind - Step	1 bit	0: Step Up 1: Step Down	1.008 up/down	R, T
127*	AC + Lossnay	Status_ In3 - Dimming - Step (%)	Dimming step	4 bit	3.007 dimming control	R, T
		Status_ In3 - Shut/Blind - Move	1 bit	0: Move Up 1: Move Down	1.008 up/down	R, T
		Status_ In3 - Value	1 byte	0 .. 255	Unsigned value	R, T
128*	AC + Lossnay	Status_ In4 - Switching Status_ In4 - Dimming - On/Off	0: Off 1: On	1 bit	1.001 switch	R, T
		Status_ In4 - Shut/Blind - Step	1 bit	0: Step Up 1: Step Down	1.008 up/down	R, T
129*	AC + Lossnay	Status_ In4 - Dimming - Step (%)	Dimming step	4 bit	3.007 dimming control	R, T
		Status_ In4 - Shut/Blind - Move	1 bit	0: Move Up 1: Move Down	1.008 up/down	R, T
		Status_ In4 - Value	1 byte	0 .. 255	Unsigned value	R, T

*** NOTE**
Objects 122 to 129 vary depending on the selected Function (page 37). For the Shutter/Blind function, they also vary depending on the Method (page 39).

130	AC	Legacy_ Mode	0: Auto 1: Heat 2: Dry 3: Fan 4: Cool	1 byte	Enumerated value	R, T
131	AC	Legacy_ Fan Speed	0: Auto 1 .. 4: Fan Speed 1 .. Fan Speed 4	1 byte	Enumerated value	R, T

Object #	Unit type	Name	Function	Length	Data type	Flags
132	AC	Legacy_ Vanes	0: Auto 1 .. 5: Position 1 .. Position 5 6: Swing	1 byte	Enumerated value	R, T

9. Error Codes

Error Code	Description
-1	AC unit is offline
0	No error
1102	Discharge Temperature high
1108	Internal thermostat detector working (49C)
1110	Outdoor unit fail
1300	Pressure low
1302	Pressure high (High pressure probe working 63H)
1503	Protection against freeze or battery high temperature
1504	Protection against freeze or battery high temperature
1504	Overheating protection
1509	High pressure error (ball valve closed)
1520	Super heating anomaly due to low temp. of discharge. (TH4)
2500	Erroneous operation of drain pump
2502	Erroneous operation of drain pump
2503	Drain sensor anomaly (DS)
4030	Serial transmission error
4100	Compressor pause due to excess of current (initial block)
4101	Compressor pause due to excess of current (overload)
4102	Phase detection opened
4103	Antiphase detection
4108	Phase opened in phase L2 or connector 51CM opened
4118	Error in the antiphase detector (electronic board)
4124	Connector 49L opened
4210	Cut due to overcurrent of compressor
4220	Voltage anomaly
4230	Radiator panel temperature anomaly (TH8)
5101	Ambient temperature probe anomaly (TH1), indoor unit
5102	Liquid probe anomaly (TH2)
5102	Cond/Evap probe anomaly (TH5)
5104	Error detection in discharge temperature
5105	Outdoor probe error TH3
5106	Outdoor probe error TH7
5107	Outdoor probe error TH6
5110	Outdoor probe error TH8
5202	Connector 63L opened
5300	Current probe error
6600	MNET duplicated address definition
6602	MNET Line transmission hardware error
6603	MNET BUS busy
6606	MNET Line transmission error
6607	MNET transmission error
6607	MNET without ack
6608	MNET transmission error
6608	MNET without response
6831	AC’s remote command transmission error (reception error)
6832	AC’s remote command transmission error (transmission error)

Error Code	Description
6840	Transmission error with the indoor/outdoor unit (reception error)
6841	Transmission error with the indoor/outdoor unit (transmission error)
6844	Error in interconnection cable in the indoor/outdoor unit, indoor unit number deactivated (5 min or more)
6845	Error in interconnection cable in the indoor/outdoor unit (cabling error, disconnection)
6846	Initial timer deactivated

NOTE

If you detect a non-listed error code, please contact Mitsubishi Electric technical support.