ENGLISH

INMBSDAI001I000 Modbus RTU Gateway

COMPATIBLE WITH DOMESTIC AIR CONDITIONING SYSTEMS COMMERCIALIZED BY DAIKIN

USER MANUAL
Version 1.0.2
Publication date 2024-11-18

14 rue Edouard Petit
42000 St-Etienne
Tel : +33 477 92 03 56
Email : contact@rg2i.com
www.rg2i.com

Copyright © 2024 Intesis

Disclaimer

The information in this document is for informational purposes only. Please inform HMS Networks of any inaccuracies or omissions found in this document. HMS Networks disclaims any responsibility or liability for any errors that may appear in this document.

HMS Networks reserves the right to modify its products in line with its policy of continuous product development. The information in this document shall therefore not be construed as a commitment on the part of HMS Networks and is subject to change without notice. HMS Networks makes no commitment to update or keep current the information in this document.

The data, examples and illustrations found in this document are included for illustrative purposes and are only intended to help improve understanding of the functionality and handling of the product. In view of the wide range of possible applications of the product, and because of the many variables and requirements associated with any particular implementation, HMS Networks cannot assume responsibility or liability for actual use based on the data, examples or illustrations included in this document nor for any damages incurred during installation of the product. Those responsible for the use of the product must acquire sufficient knowledge in order to ensure that the product is used correctly in their specific application and that the application meets all performance and safety requirements including any applicable laws, regulations, codes and standards. Further, HMS Networks will under no circumstances assume liability or responsibility for any problems that may arise as a result from the use of undocumented features or functional side effects found outside the documented scope of the product. The effects caused by any direct or indirect use of such aspects of the product are undefined and may include e.g. compatibility issues and stability issues.

Table of Contents

1. Description and Order Codes 1

2. General Information 2

2.1. Intended Use of the User Manual 2
2.2. General Safety Information 2
2.3. Admonition Messages and Symbols 3

3. Overview 4

3.1. Inside the Package 5
3.2. Main Features 5
3.3. Quickstart Guide 5

4. Hardware 6

4.1. Mounting 6
4.2. Connections 7
4.2.1. Gateway Connectors 7
4.2.2. Common Connections 8
4.2.2.1. Connecting the Gateway to the AC Indoor Unit 8
4.2.3. Connection procedure for Modbus 8
4.3. Gateway Layout 10
4.4. Device LED indications 10
4.5. DIP Switch Configuration 10
4.6. Technical Specifications 12
4.7. Dimensions 13

5. Modbus Interface Specification 14

5.1. Modbus Physical Layer 14
5.2. Modbus Registers 14
5.2.1. Control and Status Registers 19
5.2.2. Configuration Registers 21
5.2.3. Considerations on Temperature Registers 22
5.3. Implemented Modbus Functions 23
5.4. Termination resistors and Fail-safe Biasing Mechanism 24

6. Error Codes 25

1. Description and Order Codes

Modbus RTU (EIA-485) Gateway for Daikin Air Conditioners.

Compatible with domestic air conditioning systems commercialized by Daikin.

Use the compatibility tool to get a complete list of compatible units: https://compatibility.intesis.com/

ORDER CODE	LEGACY ORDER CODE
INMBSDAI001I000	DK-AC-MBS-1

2. General Information

2.1. Intended Use of the User Manual

This manual contains the main features of this Intesis gateway and the instructions for its appropriate installation, configuration, and operation.

Any person who installs, configures, or operates this gateway or any associated equipment should be aware of this manual's contents.

Keep this manual for future reference during the installation, configuration, and operation.

2.2. General Safety Information

IMPORTANT
Follow these instructions carefully. Improper work may seriously harm your health and damage the gateway and/or any other equipment connected to it.

Only technical personnel, following these instructions and the country legislation for installing electrical equipment, can install and manipulate this gateway.

Install this gateway indoors, in a restricted access location, avoiding exposure to direct solar radiation, water, high relative humidity, or dust.

Preferably, mount this gateway on a DIN rail inside a grounded metallic cabinet, following the instructions in this manual.

If mounting on a wall, firmly fix this gateway on a non-vibrating surface, following the instructions in this manual.

All wires (for communication and power supply, if needed) must only be connected to networks with indoor wiring. All communication ports are considered for indoor use and must only be connected to SELV circuits.

Disconnect all systems from power before manipulating and connecting them to the gateway.

Respect the expected polarity of power and communication cables when connecting them to the gateway.

This Intesis gateway is designed for installation in an enclosure. When the device is mounted outside an enclosure, precautions should be taken to avoid electrostatic discharges to the unit in environments with static levels above 4 kV. When working in an enclosure (e.g., making adjustments, setting switches, etc.), typical anti-static precautions should be observed before touching the unit.

Binary inputs, if present, are potential-free contact. Do not connect any voltage.

2.3. Admonition Messages and Symbols

CAUTION
Instruction that must be followed to avoid a potentially hazardous situation that, if not avoided, could result in minor or moderate injury.

IMPORTANT
Instruction that must be followed to avoid a risk of reduced functionality and/or damage to the equipment or to avoid a network security risk.

NOTE
Additional information which may facilitate installation and/or operation.

TIP
Helpful advice and suggestions.

NOTICE
Remarkable Information.

3. Overview

The Intesis® INMBSDAI001I000 gateway provides full integration of Daikin air conditioners into Modbus RTU (EIA-485) networks.

Figure 1. Integration of Daikin AC units into a Modbus RTU installation using the Intesis INMBSDAI001I000 gateway.

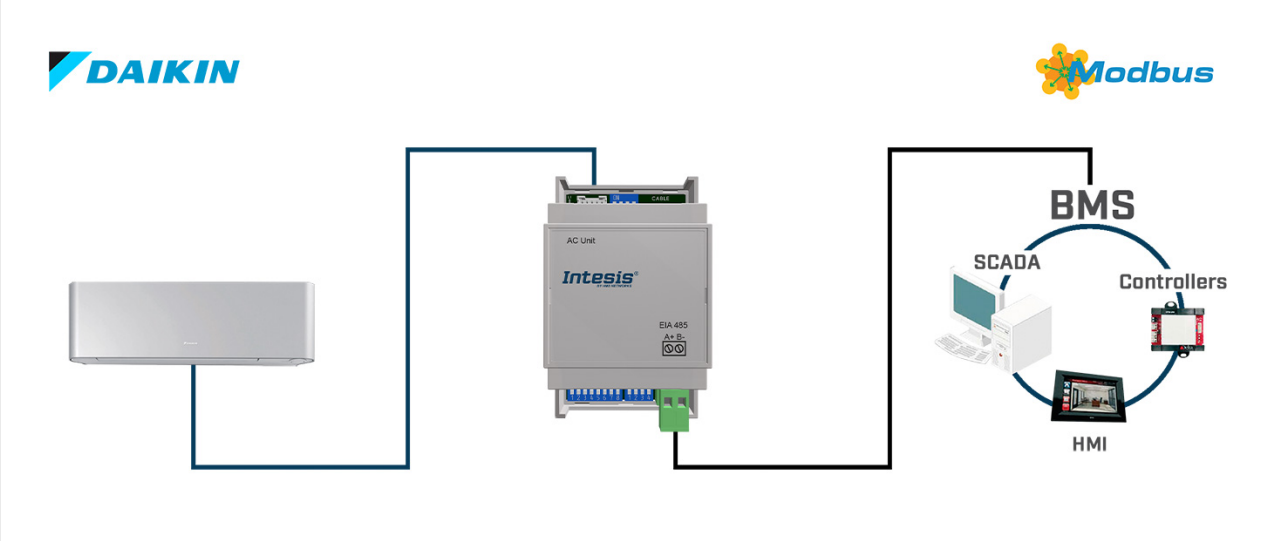

MAIN FEATURES

- Small dimensions for quick and easy installation (93 x 53 x 58 mm / 3.7” x 2.1” x 2.3”)
- DIN rail / wall mount.
- No external power supply required
- Direct connection to the AC indoor unit
- Direct connection to Modbus RTU networks
- Configuration from built-in DIP switches blocks or from Modbus RTU
- AC unit status monitoring, including runtime counter and error indication for maintenance management
- Simultaneous AC unit control from both the Modbus RTU system and the unit remote controller

NOTE

- Up to 63 Intesis devices can be connected to the same network. This gateway is a Modbus slave device, so installation of Modbus repeaters may be required depending on the speed setting.
- Only one AC indoor unit can be connected to INMBSDAI001I000 gateway.

TIP

Please refer to section List of supported AC unit models for details on compatible models.

IMPORTANT

This document assumes that the user is familiar with these technologies.

3.1. Inside the Package

ITEMS INCLUDED

- Intesis INMBSDAI001I000 gateway
- Cable to connect the gateway and the indoor unit
- Installation guide

3.2. Main Features

- Modbus RTU (EIA-485) server device.
- Total control and monitoring of the AC unit from Modbus RTU, including AC unit's internal variables, running hours counter (for filter maintenance control) and error indication.
- Quick and easy installation and configuration (plug and set the DIP switches).
- External power not required.
- Simultaneous control of the AC unit by Modbus RTU and the IR remote controller.
- Reduced dimensions.
- Wall or DIN rail mounting, or even inside the indoor unit in some models of AC.
- Window contact function allows energy savings.

3.3. Quickstart Guide

IMPORTANT
Disconnect all systems from the power source before connecting them to the gateway.

NOTE
DIN rail mounting inside a grounded cabinet or metal enclosure is recommended.

1. Mount the Intesis gateway in the desired installation site.
2. Connect the gateway to the Modbus RTU network via its EIA-485 port. See details in Connection procedure for Modbus (page 8)
3. Connect the supplied AC connection cable. See details in Connecting the Gateway to the AC Indoor Unit (page 8)
4. Configure the gateway using the built-in DIP switches. See details in DIP Switch Configuration (page 10)
5. The Intesis gateway is ready to be used in your system.

4. Hardware

4.1. Mounting

IMPORTANT
Before mounting, please ensure that the chosen installation place preserves the gateway from direct solar radiation, water, high relative humidity, or dust.

NOTE
Mount the gateway on a wall or over a DIN rail. DIN rail mounting inside a grounded metallic cabinet is recommended.

IMPORTANT
Ensure the gateway has sufficient clearances for all connections when mounted. See Dimensions (page 13).

Wall mounting

1. Press the rear panel clips outwards until you hear a *click*.
2. Use the clip holes to screw the gateway to the wall.
3. Make sure the gateway is firmly fixed.

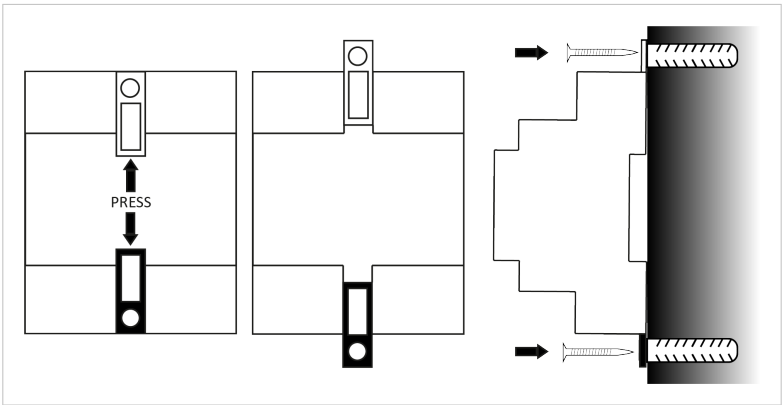

DIN rail mounting

Keep the rear panel clip in its original position.

1. Fit the gateway's top-side clip in the upper edge of the DIN rail.
2. Press the low side of the gateway gently to lock it in the DIN rail.
3. Make sure the gateway is firmly fixed.

NOTE
For some DIN rails, to complete step 2, you may need a small screwdriver or similar to pull the bottom clip down.

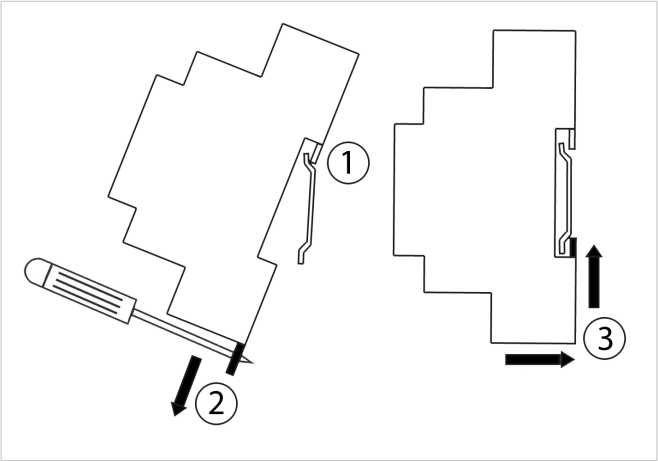

4.2. Connections

NOTE
Use the supplied specific cable for connection to the AC unit.

CAUTION
Disconnect all systems from the power source before manipulating and connecting them to the gateway.

4.2.1. Gateway Connectors

Figure 2. General view of all gateway connectors

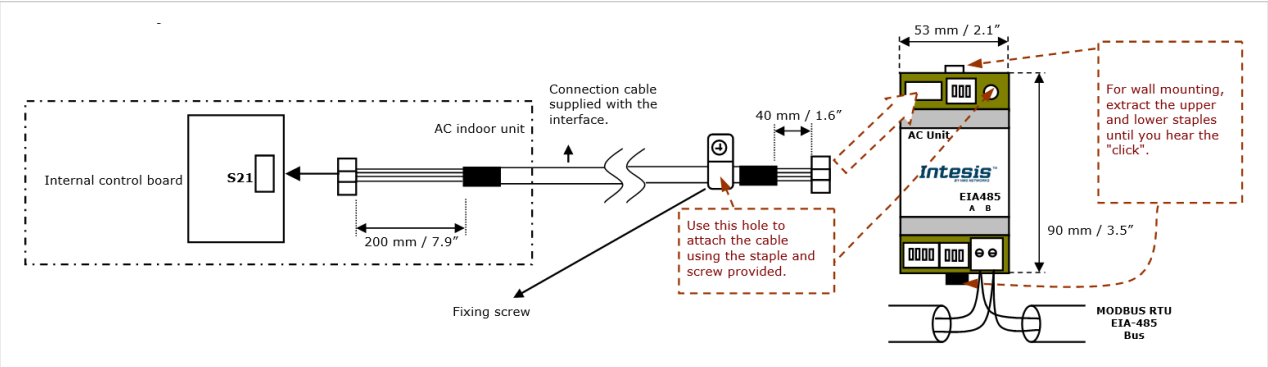

NOTE
Mount the gateway in the desired installation site before wiring.

IMPORTANT
Use solid or stranded wires (twisted or with ferrule).

Wire cross-section/gauge for all wire connectors:

- One core: 0.2 to 2.5 mm^2 (24 .. 11 AWG)
- Two cores: 0.2 to 1.5mm^2 (24 .. 15 AWG)
- Three cores: Not permitted

NOTE
To know more about each port's specifications, see Technical Specifications (page 12).

4.2.2. Common Connections

4.2.2.1. Connecting the Gateway to the AC Indoor Unit

1. Disconnect the AC unit from its power supply.
2. Open the indoor unit front cover to access the internal control board.
3. Locate the socket connector marked as S21 on the control board.
4. Use the supplied cable. Plug the mating connector into the S21 socket, then click-fit the other end's connector into the INMBSDAI001I000 socket marked as AC unit.
5. Fit the unit front cover before powering on.

IMPORTANT
The cable supplied with the gateway is 1.5 m (4.9 ft) long. Do not modify the length of the supplied cable, as it may affect the device operation.

TIP
The stripped cable length at the AC unit's end is longer than at the device's, providing for a section on this end to be fixed inside the AC unit 's enclosure.

4.2.3. Connection procedure for Modbus

NOTE
Remember to check the Common Connections (page 8).

- Connect the Modbus RTU communication cable to the gateway's **EIA-485** port.

IMPORTANT
Observe polarity.

IMPORTANT

Remember the characteristics of the standard EIA-485 bus:

- Maximum distance of 1200 meters (0.75 miles).
- Maximum of 32 devices connected to the bus.
- Loop or star topologies are not allowed.

EIA-485 BUS. TERMINATION RESISTORS AND FAIL-SAFE BIASING MECHANISM

The EIA-485 bus requires a 120Ω terminator resistor at each end of the bus to avoid signal reflections.

In order to prevent fail status detections by the receivers, which are "listening" to the bus, when all the transmitters' outputs are in three-state (high impedance), a fail-safe biasing mechanism is required. This mechanism provides a safe status (a correct voltage level) in the bus when all the transmitters' outputs are in three-state.

The INMBSDAI001I000 gateway includes an on-board terminator resistor of 120Ω that can be connected to the EIA-485 bus by using DIP switch SW4.

- **SW4, Position 4:**
  ON: 120 Ω termination active.
  OFF: 120 Ω termination inactive (default position).

Some Modbus RTU EIA-485 Master devices can provide also internal 120Ω terminator resistor and/or fail-safe biasing. Consult the technical documentation of the Master device connected to the EIA-485 network in each case.

If the termination resistor is enabled and you install the gateway at one of the ends of the bus, do not install an additional termination resistor at that end.

4.3. Gateway Layout

Find in this image below the disposition of various hardware elements in the gateway.

Figure 3. Gateway layout

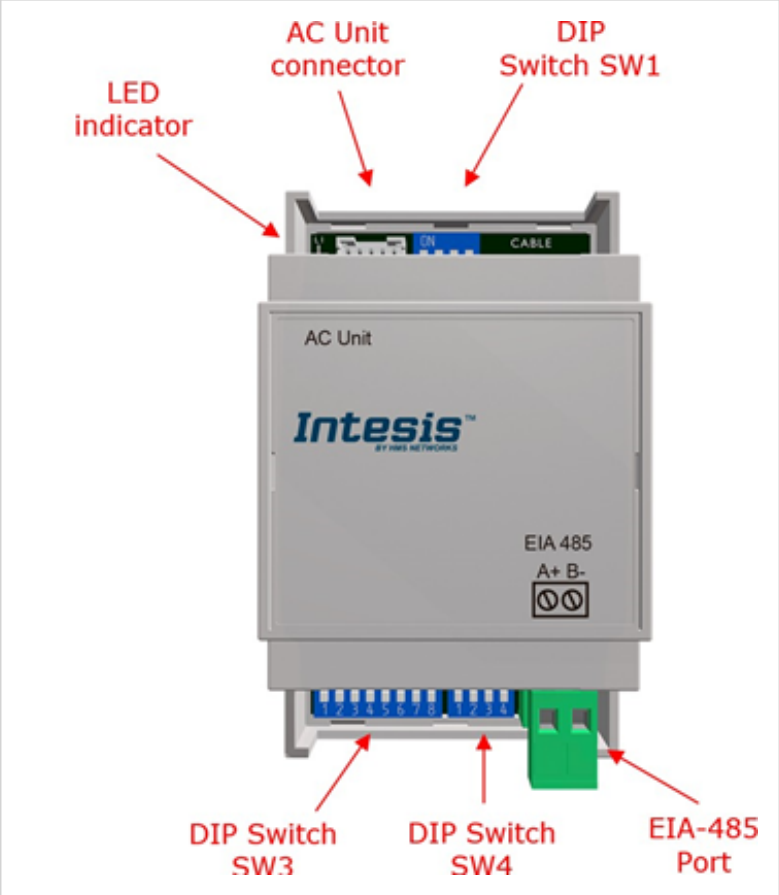

The following sections explain LEDs and DIP switches in more detail.

4.4. Device LED indications

The device features a LED for indication of operational status.

Table 1. LED indications

Device status	LED indication	On/Off period	Description
Power-up	LED pulse	ON for 5 seconds, OFF after	Device reboot / power-up
Normal operation	LED flashing	ON for 200 ms, OFF for 2 s	Device correctly configured and running
Normal operation	LED off	OFF	No Modbus Slave address configured
Normal operation	LED blinking	ON for 200 ms / OFF for 200 ms	Communication error with AC unit

4.5. DIP Switch Configuration

All the configuration settings on the INMBSDAI001I000 gateway can be written and read from the Modbus interface. Some of these settings can also be set up from the gateway's onboard DIP switch blocks.

The following tables apply to the interface configuration through DIP switches:

NOTICE
DIP-Switch SW1 is not used by the current version of the INMBSDAI001I000 gateway.

Table 2. DIP switches SW3 and SW4: Modbus baud rate setting

SW3								SW4				Description
Position								Position				
1	2	3	4	5	6	7	8	1	2	3	4	
X	X	X	X	X	X	↑	↑	X	X	↑	X	2400 bps
X	X	X	X	X	X	↓	↑	X	X	↑	X	4800 bps
X	X	X	X	X	X	↑	↓	X	X	↑	X	9600 bps (default value)
X	X	X	X	X	X	↓	↓	X	X	↑	X	19200 bps
X	X	X	X	X	X	↑	↑	X	X	↓	X	38400 bps
X	X	X	X	X	X	↓	↑	X	X	↓	X	57600 bps
X	X	X	X	X	X	↑	↓	X	X	↓	X	76800 bps
X	X	X	X	X	X	↓	↓	X	X	↓	X	115200 bps

Table 3. Dip switch SW4: Temperature scale and magnitude settings

SW4				Description
Position				
1	2	3	4	
↑	X	X	X	Temperature values in Modbus register are represented in degrees (x1) (default value).
↓	X	X	X	Temperature values in Modbus register are represented in degrees (x10).
X	↑	X	X	Temperature values in Modbus register are represented in degrees Celsius (default value).
X	↓	X	X	Temperature values in Modbus register are represented in degrees Fahrenheit.

Table 4. Dip switch SW4: Termination resistor setting

SW4				Description
Position				
1	2	3	4	
X	X	X	↓	120Ω termination inactive (default position)
X	X	X	↑	120Ω termination active

Table 5. DIP switch SW3: Modbus server address setting

Address	Binary	SW3
0	0 0 0 0 0 0 X X	↓ ↓ ↓ ↓ ↓ ↓ X X
1	1 0 0 0 0 0 X X	↑ ↓ ↓ ↓ ↓ ↓ X X
2	0 1 0 0 0 0 X X	↓ ↑ ↓ ↓ ↓ ↓ X X
3	1 1 0 0 0 0 X X	↑ ↑ ↓ ↓ ↓ ↓ X X
[...]	[...]	[...]
61	1 0 1 1 1 1 X X	↑ ↓ ↑ ↑ ↑ ↑ X X
62	0 1 1 1 1 1 X X	↓ ↑ ↑ ↑ ↑ ↑ X X
63	1 1 1 1 1 1 X X	↑ ↑ ↑ ↑ ↑ ↑ X X

NOTE
DIP switch configuration will only take effect after a device reboot.

4.6. Technical Specifications

Housing	Plastic, PC type (UL 94 V-0) Net dimensions (DxWxH): Millimeters: 93 x 53 x 58 mm Inches: 3.7 x 2.1 x 2.3" Color: Light grey. RAL 7035
Weight	85 g
Mounting	Wall DIN rail EN60715 TH35
Wires (for low-voltage signals)	Per terminal: solid wires or stranded wires (twisted or with ferrule) Wire cross-section/gauge: One core: 0.2 to 2.5 mm^2 (24 to 11 AWG) Two cores: 0.2 to 1.5 mm^2 (24 to 15 AWG) Three cores: Not permitted
EIA-485 port	1 x Green pluggable terminal block (2 poles: A, B)
AC port	1 x specific connector Specific cable included
LEDs	1 x Onboard LED - operational status
Switch 1 (SW1)	1 x DIP switch
Switch 3 (SW3)	1 x DIP switch for Modbus RTU settings
Switch 4 (SW4)	1 x DIP switch for extra functions
Operational temperature	Celsius: 0 .. 60°C Fahrenheit: 32 .. 140°F
Stock temperature	Celsius: -20 .. 85°C Fahrenheit: -4 .. 185°F
Operational and stock humidity	5 to 95%. No condensation
Isolation voltage	1500 VDC
Isolation resistance	1000 MΩ
Protection	IP20 (IEC60529)

4.7. Dimensions

- **Net dimensions (HxWxD)**
  Millimeters: 93 x 53 x 58 mm
  Inches: 3.6 x 2.1 x 2.3"

IMPORTANT
Ensure the gateway has sufficient clearance for all connections when mounted.

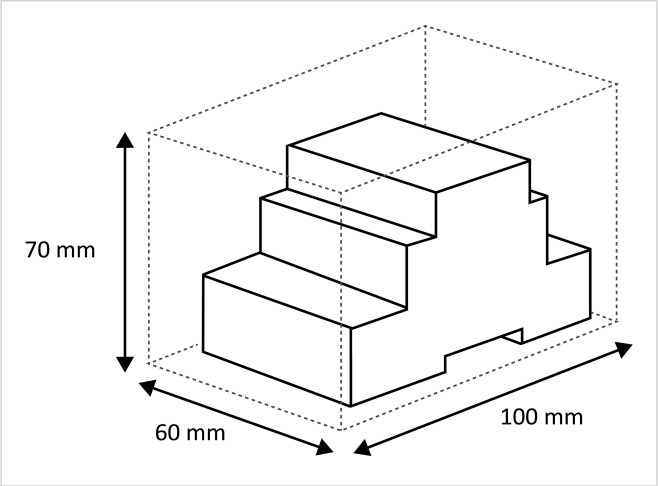

5. Modbus Interface Specification

5.1. Modbus Physical Layer

The INMBSDAI001I000 gateway implements a Modbus RTU (server) interface to be connected to an EIA-485 bus. It features 8-N-2 communication (eight data bits, no parity, and two stop bits) with several baud rates available (2400 bps, 4800 bps, **9600 bps -default-**, 19200 bps, 38400 bps, 57600 bps, 76800 bps, and 115200 bps). It also supports 8-N-1 communication (eight data bits, no parity, and one stop bit). The default Modbus server address is 1.

NOTE
AUTO-DETECT FUNCTION. The gateway will automatically detect the communication type (8-N-1 or 8-N-2) and set itself accordingly. No user action or manual settings are required.

5.2. Modbus Registers

All registers are 16-bit unsigned holding register type and use the standard Modbus big-endian notation.

IMPORTANT
The INMBSDAI001I000 gateway has a polling limit of 50 registers. Therefore, it is not possible to poll more than 50 registers simultaneously, for example, if the same TX frame asks for the status of more than 50 registers.

Register Name	Possible values	Modbus address (base 0)	PLC address (base 1)	R/W
ON/OFF	0: Off 1: On	0	1	R/W
OPERATION MODE **NOTE** The available modes may vary depending on the AC model.	0: Auto 1: Heat 2: Dry 3: Fan 4: Cool	1	2	R/W
FAN SPEED **NOTE** The available fan speeds may vary depending on the AC model.	0: Auto 1 .. 6: Speed 1 .. Speed 6 10: Fan stop	2	3	R/W
VANE U/D POSITION **NOTE** The available vane positions may vary depending on the AC model.	0: Auto 1 .. 9: Position 1 .. Position 9 10: Swing	3	4	R/W

Register Name	Possible values	Modbus address (base 0)	PLC address (base 1)	R/W
TEMPERATURE (USER) SETPOINT **NOTE** Temperature requested from the Modbus side. To know more, see Considerations on Temperature Signals.	-32768 (Initialization value) Value in °C; °F; x1; x10 **NOTE** Set the temperature units via the DIP switch SW2. **NOTE** The value range depend on the AC model.	4	5	R/W
INDOOR UNIT REFERENCE TEMPERATURE **NOTE** Ambient temperature that the indoor unit is using as a reference. To know more, see Considerations on Temperature Signals.	Value in °C; °F; x1; x10 **NOTE** Set the temperature units via the DIP switch SW2. **NOTE** The value range depend on the AC model.	5	6	R
WINDOW CONTACT PROTOCOL INPUT	0: Closed (default) 1: Open	6	7	R/W
CONTROL OBJECTS DISABLEMENT **NOTE** It disables the control of the AC unit through the registers of the gateway. This value is stored in non-volatile memory.	0: Control objects enabled (default) 1: Control objects disabled **TIP** Send a 0 to this register if, for an unknown reason, the gateway doesn't work.	7	8	R/W
REMOTE CONTROL DISABLEMENT **NOTE** It disables the control of the AC unit through any RC. This value is stored in non-volatile memory.	0: RC enabled (default) 1: RC disabled	8	9	R/W
OPERATION TIME **NOTE** This value is stored in non-volatile memory.	0 .. 65535 hours	9	10	R/W
ALARM STATUS	0: No Error present 1: Error present	10	11	R
ERROR CODE	0: No error present 65535 (-1 if it is read as a signed value): Communication error between the gateway or the remote controller and the AC unit. For any other value, see Error Codes.	11	12	R
OPEN WINDOW TIMEOUT (MIN) **NOTE** Once window contact is "open", this is the time in minutes before turning the AC unit off.	0 .. 30 minutes Default value: 30	13	14	R/W

Register Name	Possible values	Modbus address (base 0)	PLC address (base 1)	R/W
BAUDRATE	Baudrate currently selected via DIP switch SW2.	14	15	R
MODBUS SLAVE ADDRESS	1 .. 63	15	16	R
MAX NUM OF FANSPEEDS	Configured number of fan speeds.	21	22	R
INPUT SENSOR TEMPERATURE **NOTE** Ambient temperature provided by a sensor from the Modbus side. See Ambient Temperature and Virtual Temperature Function.	-32768: (Initialization value). No temperature is provided by an external sensor. Any other value: Ambient temperature reported by the external sensor.	22	23	R/W
AC REAL SETPOINT **NOTE** Temperature setopint sent to the indoor unit. To know more, see Considerations on Temperature Signals.	Value in °C; °F; x1; x10 **NOTE** Set the temperature units via the DIP switch SW2. **NOTE** The value range depend on the AC model.	23	24	R
ACTUAL AC MAX SETPOINT	-32768 (Initialization value) Value in °C; °F; x1; x10 **NOTE** Set the temperature units via the DIP switch SW2. **NOTE** The value range depend on the AC model.	24	25	R
ACTUAL AC MIN SETPOINT	-32768 (Initialization value) Value in °C; °F; x1; x10 **NOTE** Set the temperature units via the DIP switch SW2. **NOTE** The value range depend on the AC model.	25	26	R
VANE L/R POSITION	0: Auto 1 .. 5: Pos 1 .. Pos 5 10: Swing **NOTE** The available vane positions depend on the AC model.	26	27	R/W
WINDOW CONTACT FUNCTIONAL STATUS (FEEDBACK)	0: Not active (default) 1: Active (the window is open)	31	32	R
WIN CONTACT ON/OFF DISABLEMENT	0: Window contact is not disabling On/Off 1: Window contact is disabling On/Off	40	41	R
FILTER RESET	1: Reset	43	44	W

Register Name	Possible values	Modbus address (base 0)	PLC address (base 1)	R/W
FILTER STATUS	0: Off - Filter status clean 1: Filter status alarm	44	45	R
SWITCH VALUE	Current value of DIP switches	48	49	R
INPUT REFERENCE TEMPERATURE (FEEDBACK)	Value in °C; °F; x1; x10 **NOTE** Set the temperature units via the DIP switch SW2.	65	66	R
RETURN PATH TEMPERATURE	Value in °C; °F; x1; x10 **NOTE** Set the temperature units via the DIP switch SW2.	66	67	R
ERROR ADDRESS	It indicates the AC indoor unit address that reports the error.	81	82	R
FILTER SIGNAL ADDRESS	It indicates the AC indoor unit address that reports the filter signal.	86	87	R
THERMOSTAT ON **NOTE** The THERMOSTAT ON register indicates if the AC system is currently working to reach or maintain the set point temperatures selected. It should not be confused with the On/Off function.	0: The AC system is within the setpoint temperature. 1: The AC system is not within the setpoint temperature and is working to achieve the setpoint temperature.	87	88	R
OPERATION MODE ROLE	1: ROLE_MASTER 2: ROLE_SLAVE 3: ROLE_FREE (alone)	88	89	R
FW version MSB	It shows the first two numbers of the firmware version. Example: For version 1.2.3.4, it will show 1.2 (in hexadecimal).	94	95	R
FW version LSB	It shows the last two numbers of the firmware version. Example: For version 1.2.3.4, it will show 3.4 (in hexadecimal).	95	96	R
MASTER/SLAVE	0: Slave 1: Master	98	99	R
RESET	1: Reset	99	100	W
VIRTUAL TEMP ACTIVE	0: Not active 1: Active	129	130	R
WINDOW CONTACT STEP	0: Idle (window is closed). 1: Timeout1 (window is opened, timeout starts). 2: Timeout2 (it doesn't apply to window contact). 3: Window contact applies (window is opened, time is finished, window contact action is applied).	130	131	R
WINDOW CONTACT RELOAD LAST VALUE	0: No (default) 1: Yes	1000	1001	R/W
WINDOW CONTACT LOCK WHEN OPEN	0: No 1:Yes	1001	1002	R/W
WINDOW TIMEOUT (IN MINUTES)	0 .. 30	1002	1003	R/W
MACHINE MODE	0: Normal 1: Autochangeover 2: Limited setpoint	1150	1151	R/W

Register Name	Possible values	Modbus address (base 0)	PLC address (base 1)	R/W
MACHINE MIN SETPOINT COOL	°C/°F Default value: 24°C / 75°F **NOTE** Set the temperature units via the DIP switch SW2.	1153	1154	R/W
MACHINE MAX SETPOINT COOL	°C/°F Default value: 28°C / 82°F **NOTE** Set the temperature units via the DIP switch SW2.	1154	1155	R/W
MACHINE MIN SETPOINT HEAT	°C/°F Default value: 19°C / 66°F **NOTE** Set the temperature units via the DIP switch SW2.	1155	1156	R/W
MACHINE MAX SETPOINT HEAT	°C/°F Default value: 23°C / 73°F **NOTE** Set the temperature units via the DIP switch SW2.	1156	1167	R/W
REMOTE LOCK ON NVM	0: Remote lock is disabled after reset 1: It keeps the value set in register 8 (AC remote control disablement)	1220	1221	R/W
INITIAL WAIT AS MASTER	Startup delay, in seconds Default value: 0 seconds (no delay)	1230	1231	R/W
DEVICE IDENTIFIER	2050	2000	2001	R
L_R_VANES_MAP	Indicates the available states of the signal. Each bit in the register has its own meaning - see the table below.	2005	2006	R

Table 6. L_R_VANES_MAP bit characterization

Bit 15	Bit 10	Bit 05	Bit 04	Bit 03	Bit 02	Bit 01	Bit 00
1: Invalid 0: Valid	SWING	POS_5	POS_4	POS_3	POS_2	POS_1	AUTO/OFF
	1: Enabled 0: Disabled						

NOTE

The following registers are only available when the gateway is configured as a header in the RC bus:

- ERROR ADDRESS
- FILTER RESET
- FILTER SIGNAL ADDRESS
- INITIAL WAIT AS MASTER

More information in DIP Switch.

5.2.1. Control and Status Registers

Table 7. Control and Status registers

Register Address (protocol address)	Register Address (PLC address)	Description	R/W
0	1	AC unit On/Off 0: Off 1: On	R, W
1	2	AC unit Mode[1] 0: Auto (default value) 1: Heat 2: Dry 3: Fan 4: Cool	R, W
2	3	AC unit Fan Speed[1] 0: Auto 1: Low 2: Mid 1 3: Mid 2 4: Mid 3 5: High	R, W
3	4	AC unit Up/Down Vane Position[1] 0: Off 10: Swing	R, W
4	5	AC unit Temperature Setpoint[1,2,3] -32768 (initialization value) **COOL** 18 .. 32°C 64 .. 90°F **HEAT** 16 .. 30°C 61 .. 86°F **AUTO** 18 .. 30°C 64 .. 86°F	R, W
5	6	AC unit Temperature reference[1,2,3] -32678 (initialization value) 10 .. 38°C 50 .. 100°F	R
6	7	Window Contact 0: Closed (default value) 1: Open	R, W
7	8	Gateway Disablement[4] 0: Gateway enabled (default value) 1: Gateway disabled	R, W
8	9	AC Remote Control Disablement[4,5] 0: Remote Control enabled (default) 1: Remote Control disabled	R, W
9	10	AC unit Operation Time[4] 0 .. 65535 (hours). Time the AC unit is “On"	R, W
10	11	AC unit Alarm Status 0: No alarm condition 1: Alarm condition	R

Register Address (protocol address)	Register Address (PLC address)	Description	R/W
11	12	Error Code 0: No error present 65535 (-1 if it is read as signed value): Communication error with the AC unit For possible error codes and their explanation, see Error Codes (page 25)	R
22	23	Indoor unit ambient temperature from external sensor (at Modbus side) [1,2,3,6] -32768: (Initialization value). No temperature is provided by an external sensor. Any other	R, W
23	24	AC Real temperature setpoint [1,2,3,7] -32678 (initialization value) **COOL** 18...32°C 64...92°F **HEAT** 16...30°C 61...88°F **AUTO** 18...30°C 64...88°F	R
26	27	AC unit Left/Right Vane Position[1] 0: Auto (default value) 10: Swing	R, W
28	29	AC Humidification Value[1] 0: Off 1: Low Humidification 2: Medium Humidification 3: High Humidification 4: Continuous	R, W
97	98	Block Periodic Sendings [4,7,8] 0: Non-blocked (default value) 1: Blocked	R, W

[1]Available values will depend on the AC unit mode. Check the AC unit model functions in its user manual to find out the possible values for this register.

[2]The order of magnitude and the scale for this register can be adjusted to Celsius x 1°C (default), Celsius x 10°C, or Fahrenheit. See Considerations on Temperature Registers (page 22) for more information.

[3]Fahrenheit x 10 is not available.

[4]This value is stored in non-volatile memory.

[5]This register blocks the remote controller's communication installed in the MD-RC bus (if the remote is installed).

[6]For more information, refer to Considerations on Temperature Registers (page 22).

[7]If the register is configured as “0: Non-blocked”, all commands received from Modbus will be sent to the AC system. If “1: Blocked”, commands from Modbus will only be sent to the AC system if they differ from the previous value (values sent on change).

[8]The register applies to firmware version 1.5 onwards.

5.2.2. Configuration Registers

Table 8. Configuration Registers

Register Address (protocol address)	Register Address (PLC address)	Description	R/W
13	14	"Open Window" switch-off timeout[1] 0 .. 30 min Factory setting: 30 min	R,W
14	15	Modbus RTU Baud rate 2400bps 4800 bps 9600 bps (default) 19200 bps 38400 bps 57600 bps 76800 bps 115200 bps	R
15	16	Device Modbus server address 1 .. 63	R
21	22	Maximum number of fan speeds Value is always 5	R
49	50	Device ID: 0x0701	R
50	51	Software version	R

[1]Once the window contact is open, a countdown to switch off the AC Unit will start from this configured value.

5.2.3. Considerations on Temperature Registers

- **AC unit temperature setpoint (R/W)** (protocol address register 4 / PLC address register 5)
  This is the adjustable temperature setpoint value required by the user. This value can be read and written. A remote controller connected to the Daikin indoor unit will report the same temperature setpoint value as this register. This will only apply when no AC unit external temperature reference is provided from the gateway. See **AC unit external temperature reference (Modbus) (R/W)** below for more information.
- **AC unit temperature reference (R)** (protocol address register 5 / PLC address register 6)
  This register reports the temperature currently used by the Daikin indoor unit as a reference for its control loop. Depending on the indoor unit configuration, this value can be the temperature reported by the sensor on the return path of the Daikin indoor unit or the sensor in its remote controller. This value is read-only.
- **AC unit external temperature reference (Modbus) (R/W)** (protocol address register 22 / PLC address register 23)
  This register is used to provide an external temperature value from the Modbus side. The Daikin indoor unit does not allow to provide a temperature directly to the gateway to be used as a reference for its own control loop. To overcome this limitation and enable the usage of an external temperature sensor from the Modbus side when this register is set, the gateway applies the virtual temperature mechanism:
  - **Virtual Temperature**
    After a couple of values have been entered in the AC unit external temperature reference (register 22/23) and the AC unit temperature setpoint (register 4/5), the INMBSDAI001I000 gateway estimates the appropriate setpoint correction to be applied.

    TIP
    EXAMPLE: If a temperature setpoint value of 22°C and an external temperature reference value of 20°C are received (registers 4/5 and 22/23, respectively), the INMBSDAI001I000 gateway will assume that the user is demanding a +2°C increase in temperature.

    By knowing at any time the AC unit temperature reference currently used by the indoor unit to control its operation (register 5/6), the gateway can calculate the temperature setpoint correction required to reach the temperature requested by the user.

    TIP
    In the example given above, if the gateway reads an AC unit temperature reference (register 5/6) of 24°C in the indoor unit, it will apply a final setpoint of 24°C + 2°C = 26°C.

    Once set, every time the gateway detects a change in the room temperature reported by the indoor unit (register 5/6), it will adjust the setpoint accordingly.

    TIP
    Following the previous example, if the gateway receives a new temperature value (register 5/6) of 25°C from the indoor unit, the effective setpoint will be adjusted to 25°C + 2°C =27°C.

    NOTE
    The gateway constantly applies the following virtual temperature formula:

    $S_{AC}=T_{AC}-(T_{BMS}-S_{BMS})$

    where

    S_{AC}: AC setpoint: Setpoint temperature in the AC system.

    T_{AC}: AC temperature: Ambient temperature in the AC system (AC reference temperature).

    T_{BMS}: BMS temperature: Ambient temperature set by the user from the BMS protocol.

    S_{BMS}: BMS setpoint: Setpoint temperature set by the user from the BMS protocol.

When the gateway detects a change of any of the values of {S_{BMS}, T_{BMS}, or T_{AC}}, it will send the new setpoint (S_{AC}) to the indoor unit.
After a device boot, the value for the external temperature reference (register 22/23) is -32768 (0x8000). This value means that no external temperature reference has yet been provided to the object, so the system is not applying the virtual temperature function.

NOTE
The use of the external temperature reference (register 22/23) (e.g., writing a value different than -32768 / 0x8000 in it) has the following relevant consequences:

- The virtual temperature mechanism is applied. The temperature setpoint value shown by the remote controller or any other control system connected to the indoor unit may differ from the value shown in register 4/5.
- The user is not allowed to change the setpoint using the unit's remote controller, as the setpoint of the indoor unit becomes exclusively controlled by the virtual temperature mechanism.

- **AC real temperature setpoint (R)** (protocol address register 23 / PLC address register 24)
  As mentioned above, the actual temperature setpoint in the indoor unit and the temperature setpoint requested from the gateway might differ when a value in the external temperature reference (register 22/23) is entered (see Virtual Temperature). This register always holds the current temperature setpoint that is being used by the indoor unit; this value is the actual temperature setpoint that will be shown in any present remote controller.

NOTICE
Temperature values for these registers are expressed in the temperature scale and magnitude set via the corresponding DIP switch block.

These are the available options:

• Celsius value: The value in the Modbus register is stored in degree Celsius (i.e. a "22" value in the Modbus register must be interpreted as 22°C). This is the default value.

• Tenths of value: The value in the Modbus register is stored in decidegree Celsius (i.e. a “220” value in the Modbus register must be interpreted as 22.0°C).

• Fahrenheit value: The value in the Modbus register is stored in degree Fahrenheit (i.e. a “72” value in the Modbus register must be interpreted as 72°F (~22°C).

See DIP Switch Configuration (page 10) for more information.

5.3. Implemented Modbus Functions

The INMBSDAI001I000 gateway implements the following standard Modbus functions:

- 03: Read Holding Registers
- 04: Read Input Registers
- 06: Write Single Register
- 16: Write Multiple Registers

IMPORTANT
Even though function 16 is available, the gateway does not allow writing operations on more than one register with the same request, so the length field when using this function should always be one.

5.4. Termination resistors and Fail-safe Biasing Mechanism

IMPORTANT
The EIA-485 bus requires a 120 Ω **termination resistor** at each end to avoid signal reflections.

In order to prevent fail status detections by bus receivers when all the transmitters' outputs are in a high-impedance state, a fail-safe biasing mechanism is required. This mechanism provides a safe status in the bus (i.e., a correct voltage level) when all the transmitters' outputs are in a high-impedance state.

The INMBSDAI001I000 gateway features an onboard 120 Ω termination resistor that can be activated via the DIP switch SW 4.

NOTICE
See for more information.

Some Modbus RTU EIA-485 Client devices can also provide an internal 120Ω termination resistor and/or fail-safe biasing. Check the technical documentation of the header device connected to the EIA-485 network for more information.

6. Error Codes

Find below a list of error codes for Daikin air conditioning systems

Table 9. Daikin Error Codes

Error Code	Error in Remote Controller	Error Category	Error description
0	N/A	INMBSDAI001I000	No active error
17	A0	**Indoor Unit**	External protection devices activated
18	A1		Indoor unit PCB assembly failure
19	A2		Interlock error for fan
20	A3		Drain level system error
21	A4		Temperature of heat exchanger (1) error
22	A5		Temperature of heat exchanger (2) error
23	A6		Fan motor locked, overload, over current
24	A7		Swing flap motor error
25	A8		Overcurrent of AC input
26	A9		Electronic expansion valve drive error
27	AA		Heater overheat
28	AH		Dust collector error / No-maintenance filter error
30	AJ		Capacity setting error (indoor)
31	AE		Shortage of water supply
32	AF		Malfunctions of a humidifier system (water leaking)
33	C0		Malfunctions in a sensor system
36	C3		Sensor system of drain water error
37	C4		Heat exchanger (1) (Liquid pipe) thermistor system error
38	C5		Heat exchanger (1) (Gas pipe) thermistor system error
39	C6		Sensor system error of fan motor locked, overload
40	C7		Sensor system of swing flag motor error
41	C8		Sensor system of over-current of AC input
42	C9		Suction air thermistor error
43	CA		Discharge air thermistor system error
44	CH		Contamination sensor error
45	CC		Humidity sensor error
46	CJ		Remote control thermistor error
47	CE		Radiation sensor error
48	CF		High pressure switch sensor
49	E0	Outdoor Unit	Protection devices activated
50	E1		Outdoor uni9t PCB assembly failure
52	E3		High pressure switch (HPS) activated
53	E4		Low pressure switch (LPS) activated
54	E5		Overload of inverter compressor motor
55	E6		Over current of STD compressor motor
56	E7		Overload of fan motor / Over current of fan motor
57	E8		Over current of AC input
58	E9		Electronic expansion valve drive error
59	EA		Four-way valve error
60	EH		Pump motor over current
61	EC		Water temperature abnormal
62	EJ		(Site installed) Protection device activated

Error Code	Error in Remote Controller	Error Category	Error description
63	EE		Malfunctions in a drain water
64	EF		Ice thermal storage unit error
65	H0		Malfunctions in a sensor system
66	H1		Air temperature thermistor error
67	H2		Sensor system of power supply error
68	H3		High Pressure switch is faulty
69	H4		Low pressure switch is faulty
70	H5		Compressor motor overload sensor is abnormal
71	H6		Compressor motor over current sensor is abnormal
72	H7		Overload or over current sensor of fan motor is abnormal
73	H8		Sensor system of over-current of AC input
74	H9		Outdoor air thermistor system error
75	HA		Discharge air thermistor system error
76	HH		Pump motor sensor system of over current is abnormal
77	HC		Water temperature sensor system error
79	HE		Sensor system of drain water is abnormal
80	HF		Ice thermal storage unit error (alarm)
81	F0		No.1 and No.2 common protection device operates.
82	F1		No.1 protection device operates.
83	F2		No.2 protection device operates
84	F3		Discharge pipe temperature is abnormal
87	F6		Temperature of heat exchanger(1) abnormal
91	FA		Discharge pressure abnormal
92	FH		Oil temperature is abnormally high
93	FC		Suction pressure abnormal
95	FE		Oil pressure abnormal
96	FF		Oil level abnormal
97	J0		Sensor system error of refrigerant temperature
98	J1		Pressure sensor error
99	J2		Current sensor error
100	J3		Discharge pipe thermistor system error
101	J4		Low pressure equivalent saturated temperature sensor system error
102	J5		Suction pipe thermistor system error
103	J6		Heat exchanger(1) thermistor system error
104	J7		Heat exchanger(2) thermistor system error
105	J8		Oil equalizer pipe or liquid pipe thermistor system error
106	J9		Double tube heat exchanger outlet or gas pipe thermistor system error
107	JA		Discharge pipe pressure sensor error
108	JH		Oil temperature sensor error
109	JC		Suction pipe pressure sensor error
111	JE		Oil pressure sensor error
112	JF		Oil level sensor error
113	L0		Inverter system error
116	L3		Temperature rise in a switch box
117	L4		Radiation fin (power transistor) temperature is too high
118	L5		Compressor motor grounded or short circuit, inverter PCB fault
119	L6		Compressor motor grounded or short circuit, inverter PCB fault
120	L7		Over current of all inputs
121	L8		Compressor over current, compressor motor wire cut

Error Code	Error in Remote Controller	Error Category	Error description
122	L9		Stall prevention error (start-up error) Compressor locked, etc.
123	LA		Power transistor error
125	LC		Communication error between inverter and outdoor control unit
129	P0		Shortage of refrigerant (thermal storage unit)
130	P1		Power voltage imbalance, open phase
132	P3		Sensor error of temperature rise in a switch box
133	P4		Radiation fin temperature sensor error
134	P5		DC current sensor system error
135	P6		AC or DC output current sensor system error
136	P7		Total input current sensor error
142	PJ		Capacity setting error (outdoor)
145	U0		Low pressure drop due to insufficient refrigerant or electronicexpansion valve error, etc.
146	U1		Reverse phase, Open phase
147	U2		Power voltage failure / Instantaneous power failure
148	U3		Failure to carry out check operation, transmission error
149	U4		Communication error between indoor unit and outdoor unit,communication error between outdoor unit and BS unit
150	U5		Communication error between remote control and indoor unit / Remote controlboard failure or setting error for remote control
151	U6		Communication error between indoor units
152	U7		Communication error between outdoor units / Communication errorbetween outdoor unit and ice thermal storage unit
153	U8	System	Communication error between main and sub remote controllers (subremote control error) / Combination error of other indoor unit / remotecontrol in the same system (model)
154	U9		Communication error between other indoor unit and outdoor unit in the samesystem / Communication error between other BS unit and indoor/ outdoor unit
155	UA		Combination error of indoor/BS/outdoor unit (model, quantity, etc.),setting error of spare parts PCB when replaced
156	UH		Improper connection of transmission wiring between outdoor and outdoorunit outside control adaptor
157	UC		Centralized address duplicated
158	UJ		Attached equipment transmission error
159	UE		Communication error between indoor unit and centralized control device
160	UF		Failure to carrey out check operation Indoor-outdoor, outdoor-outdoorcommunication error, etc.
209	60		All system error
210	61		PC board error
211	62		Ozone density abnormal
212	63		Contamination sensor error
213	64		Indoor air thermistor system error
214	65		Outdoor air thermistor system error
217	68		HVU error (Ventiair dust-collecting unit)
219	6A	Others	Dumper system error
220	6H		Door switch error
221	6C		Replace the humidity element
222	6J		Replace the high efficiency filter
223	6E		Replace the deodorization catalyst
224	6F		Simplified remote controller error
226	51		Fan motor of supply air over current or overload
227	52		Fan motor of return air over current / Fan motor of return airoverload

Error Code	Error in Remote Controller	Error Category	Error description
228	53		Inverter system error (supply air side)
229	54		Inverter system error (return air side)
241	40		Humidifying valve error
242	41		Chilled water valve error
243	42		Hot water valve error
244	43		Heat exchanger of chilled water error
245	44		Heat exchanger of hot water error
258	31		The humidity sensor of return air sensor
259	32		Outdoor air humidity sensor error
260	33		Supply air temperature sensor error
261	34		Return air temperature sensor error
262	35		Outdoor air temperature sensor error
263	36		Remote controller temperature sensor error
267	3A		Water leakage sensor 1 error
268	3H		Water leakage sensor 2 error
269	3C		Dew condensation error
339	M2		Centralized remote controller PCB error
345	M8		Communication error between centralized remote control devices
347	MA		Centralized remote control devices inappropriate combination
349	MC		Centralized remote controller address setting error
65535	N/A	INMBSDAI001I000	Error in the communication between AC unit and INMBSDAI001I000

NOTE

In case you detect a non-listed error code, please contact Daikin technical support.