Modbus Server

Open Charge Point Protocol (OCPP)

USER MANUAL

Issue date: 2/2025 v1.12

ENGLISH

14 rue Edouard Petit
42000 St-Etienne

Tel : +33 477 92 03 56
Email : contact@rg2i.com
www.rg2i.com

Important User Information

Disclaimer

The information in this document is for informational purposes only. Please inform HMS Industrial Networks of any inaccuracies or omissions found in this document. HMS Industrial Networks disclaims any responsibility or liability for any errors that may appear in this document.

HMS Industrial Networks reserves the right to modify its products in line with its policy of continuous product development. The information in this document shall therefore not be construed as a commitment on the part of HMS Industrial Networks and is subject to change without notice. HMS Industrial Networks makes no commitment to update or keep current the information in this document.

The data, examples and illustrations found in this document are included for illustrative purposes and are only intended to help improve understanding of the functionality and handling of the product. In view of the wide range of possible applications of the product, and because of the many variables and requirements associated with any particular implementation, HMS Industrial Networks cannot assume responsibility or liability for actual use based on the data, examples or illustrations included in this document nor for any damages incurred during installation of the product. Those responsible for the use of the product must acquire sufficient knowledge in order to ensure that the product is used correctly in their specific application and that the application meets all performance and safety requirements including any applicable laws, regulations, codes and standards. Further, HMS Industrial Networks will under no circumstances assume liability or responsibility for any problems that may arise as a result from the use of undocumented features or functional side effects found outside the documented scope of the product. The effects caused by any direct or indirect use of such aspects of the product are undefined and may include e.g. compatibility issues and stability issues.

© HMS Industrial Networks S.L.U - All rights reserved
This information is subject to change without notice

Gateway for the Integration of OCPP Charging Points into Modbus TCP or RTU Systems

ORDER CODES	LEGACY ORDER CODE
INMBSOCP0010100	-
INMBSOCP0200100	-

© HMS Industrial Networks S.L.U - All rights reserved
This information is subject to change without notice

INDEX

1 Before Starting 5
1.1 Understanding an OCPP installation 5
1.2 Integrating an OCPP Installation into a BMS 6
1.3 Two Possible Roles for the Gateway 7
2 Description 9
2.1 Functionality 9
2.2 Gateway capacity 9
3 Modbus interface 10
3.1 Description 10
3.2 Functions supported 10
3.3 Modbus TCP 10
3.4 Modbus RTU 10
3.5 Address Map 10
3.6 Points definition 11
4 Connections 12
4.1 Powering the device 13
4.2 Connection to Modbus 13
4.2.1 Modbus TCP 13
4.2.2 Modbus RTU 13
4.3 Connection to the configuration tool 13
5 Accessing the DIP switch and push button 13
5.1 Setting the DIP switch 14
5.2 Push button 14
6 External LED indicators 15
7 Technical specifications 16
8 Dimensions 17

© HMS Industrial Networks S.L.U - All rights reserved
This information is subject to change without notice

1 Before Starting

Important: The Intesis INMBSOCP0xx0100 gateway is compatible with OCPP 1.6 only. Ensure the OCPP installation is compatible with that version. During the installation of the gateway, you will need to know and/or modify some parameters of the OCPP network. Read the documentation of your charge points and your central system to grant your access to its configuration.

1.1 *Understanding an OCPP installation*

Figure 1. Typical structure of an OCPP installation

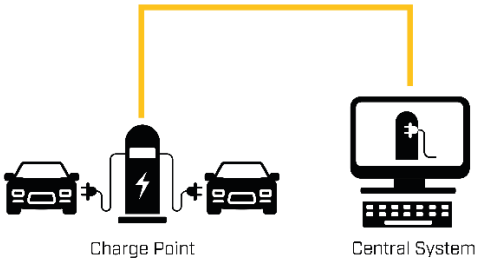

This figure represents a very simple OCPP installation: one central system and one charger with two connectors.

A typical OCPP installation includes the following elements:

- **Central System (CS):** This is the brain of the system. It is usually a specific software, running either on a computer or in the cloud, which manages the charge points and stores the information for authorizing users to use the charge points of the installation.
- **Charger:** Physical system where an electric vehicle can be charged. Chargers store some data, too, like the authorization cache, which contains all the latest received identifiers. A charger has one or more connectors.
- **Connector:** Electrical outlet used to connect the electric vehicle to the charger physically.

© HMS Industrial Networks S.L.U - All rights reserved
This information is subject to change without notice

1.2 *Integrating an OCPP Installation into a BMS*

Figure 2. An OCPP installation and a BMS

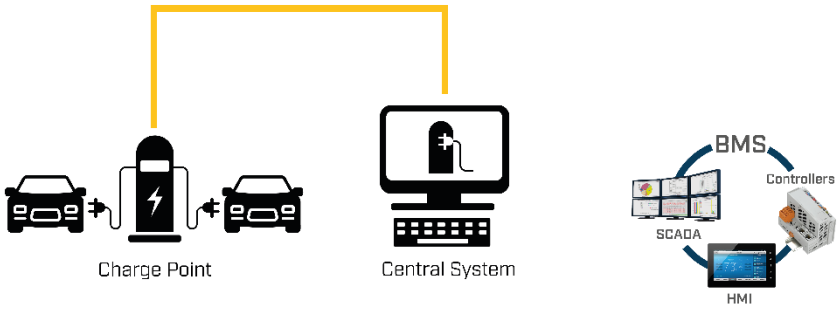

In some cases, the OCPP installation is part of a building equipped with a building management system (BMS). The BMS is responsible for controlling some systems of the building, like HVAC, lighting, blinds, etc.

Great benefits arise when linking the BMS and the OCPP installation:

- The BMS gets relevant data from the OCPP installation, like loading schedules, charging times, number and duration of charging sessions, etc.
- The BMS controls the OCPP installation, for example, limiting the amount of energy in every charging session depending on the daytime and the energy available in the building.

Figure 3. An OCPP installation integrated ito a BMS

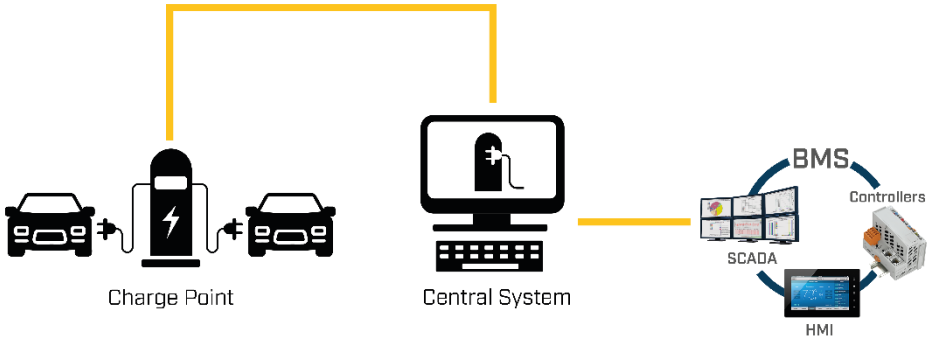

It is in this context that the Intesis INMBSOCPxxx0100 gateway plays its role in two different ways.

Important: The logic of the gateway has been developed to be supported and complemented by the logic of a Modbus-based BMS[1]. The gateway cannot work on its own and the presence of a Modbus-based BMS is mandatory.

[1] We use the term “Modbus-based BMS” to refer to any kind of Modbus controller acting as a BMS, such as a SCADA system, a PLC, etc.

© HMS Industrial Networks S.L.U - All rights reserved
This information is subject to change without notice

1.3 *Two Possible Roles for the Gateway*

1. The first possible role of the gateway is to act as a bridge between systems:

Figure 4. The gateway acts as a bridge between the OCPP elements and the BMS

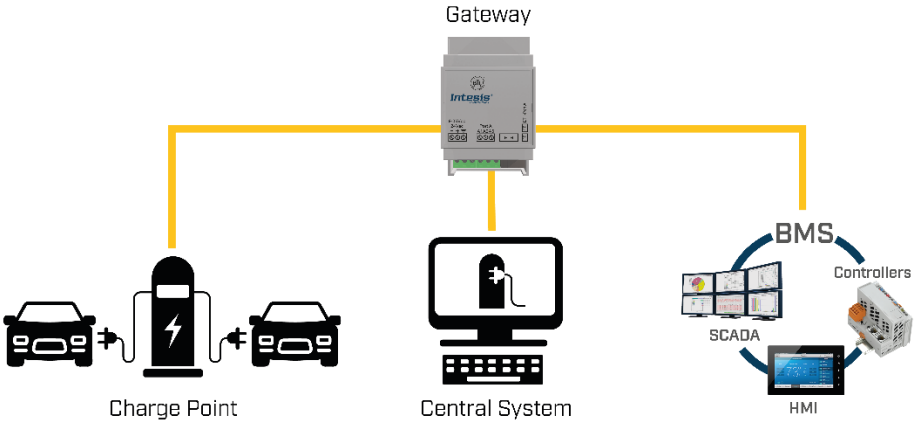

In this first case, the gateway links the OCPP charge points, the OCPP central system, and the Modbus-based BMS. The main function of the gateway is to monitor and allow the transfer of some data between the OCPP installation and the Modbus-based BMS.

Note: The functionalities available in this type of integration will not depend on the gateway itself but on the charge points and the OCPP central system. When working under this mode, the gateway makes some data available for the BMS, like the meter values and the charging profiles dedicated to the smart charging function among others.

Important: From the Intesis MAPS version 1.2.12 and the gateway's firmware version 1.0.5.0 onward, the OCPP Central System mode supports these OCPP operations:

- Smart Charging Operations
- Remote Start Transaction
- Remote Stop Transaction
- Reservation
- Meter Values (already supported in previous versions)
- Availability (already supported in previous versions)
- Charger information (already supported in previous versions)

© HMS Industrial Networks S.L.U - All rights reserved
This information is subject to change without notice

2. The second possible role for the gateway is to substitute the OCPP central system:

Figure 5. The gateway and the BMS act as the OCPP central system

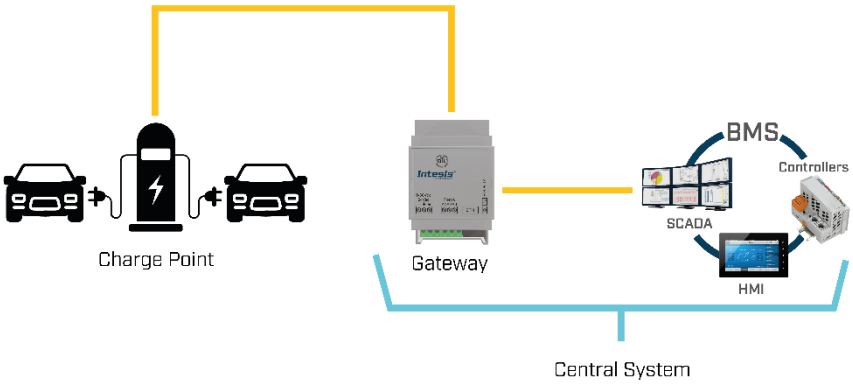

In this second case, the gateway, together with the Modbus-based BMS, substitutes the central system of the OCPP installation.

MODBUS, OCPP, AND BMS PROGRAMMING SKILLS: When using the gateway in this mode, some registers from the Modbus-based BMS side must be written following a particular sequence to grant proper communication between the OCPP information and the BMS.

Deep knowledge of Modbus and OCPP protocols and BMS programming is needed to install the gateway in this mode.

To know more about the configuration possibilities of this gateway, consult the Configuration guide.

© HMS Industrial Networks S.L.U - All rights reserved
This information is subject to change without notice

2 Description

2.1 *Functionality*

The configuration tool for this gateway is Intesis® MAPS software. For a detailed information about the necessary steps to integrate the gateway in a Modbus BMS, please review the *Intesis Configuration Guide* for more information. Available in www.intesis.com

From the OCPP system standpoint, after the start up process, all EV Chargers will try to connect with the Intesis gateway (the Intesis gateway must be configured as a Central System in the EV Chargers configuration). Connections will only be accepted if the EV chargers have been previously configured. Then, EV Chargers will notify any event or update to the gateway.

When working as a Central System, after the start up process, the gateway presents its points as Modbus Registers, to be read or written by a Modbus client/master device using standard Modbus functions. The values received from Modbus are immediately written in an OCPP message and sent to the EV Charger.

When working with an OCPP Central System, the gateway must be configured to connect to the IP of the OCPP Central system to, after the start up process, enable transparent OCPP communication between the EV chargers and the Central System. At the same time, the gateway presents its points as Modbus Registers, to be read by a Modbus client/master device using standard Modbus functions.

2.2 *Gateway capacity*

Intesis gateway capacity is detailed below:

Element	Capacity	Notes
Number of OCPP devices	Model INMBSOCP0010100: 1 device	Maximum number of different OCPP devices/chargers the Intesis gateway can communicate to
	Model INMBSOCP0200100: Up to 20 devices	
Maximum number of signals	10000	Total maximum number of enable signals on the gateway
Connectors per device supported	7	Maximum number of connectors integrable from an OCPP device
OCPP protocol version supported	OCPP 1.6	JSON version implemented
Modbus link layers supported	Modbus RTU (EIA485) Modbus TCP	Those supporting Modbus protocol. Communication over TCP/IP and RTU
Number of Modbus Master devices	Up to 6 TCP connections	Number of Modbus Client devices supported by the device

© HMS Industrial Networks S.L.U - All rights reserved
This information is subject to change without notice

3 Modbus interface

3.1 *Description*

Intesis acts as a server device in its Modbus TCP or RTU interface, connecting to the Ethernet port of the gateway or the RS485 port. To access the points and resources of the Intesis from a Modbus client/master device, see details below in this document.

3.2 *Functions supported*

Modbus functions 01 and 02 (*coils and digital input registers*) can be used to read Modbus registers.

Modbus functions 03 and 04 (*read holding registers* and *read input registers*) can be used to read Modbus registers.

Modbus functions 05 and 15 (*Single digital Holding Registers* and *Write Multiple Holding Registers*) can be used to write Modbus registers.

Modbus functions 06 and 16 (*Single Multiple Holding Registers* and *Write Multiple Holding Registers*) can be used to write Modbus registers.

If *poll records* are used to read or write more than one register, it is necessary that the range of addresses requested contains valid addresses; if not the corresponding Modbus error code will be returned.

All the registers are at least two bytes long, even if they are associated to signals of type bit in the external system, and its content is expressed in MSB..LSB.

Modbus error codes are fully supported; they will be sent whenever a non-valid Modbus action or address is required.

3.3 *Modbus TCP*

The TCP port to use can be configured (by default 502 is used).

The IP address, subnet mask and default router address to use by Intesis gateway can be also configured.

3.4 *Modbus RTU*

Connect the communication cable coming from the Modbus network to the port marked as Modbus of Intesis. Connect the EIA485 bus to connectors A3 (B+), A2 (A-) and A1 (SGND). Respect the polarity.

Remember the characteristics of the standard EIA485 bus: maximum distance of 1200 meters, maximum 32 devices connected to the bus, and in each end of the bus it must be a termination resistor of 120 Ω.

3.5 *Address Map*

The Modbus address map is predefined and it's not configurable. Check the *Configuration Guide* to find a list with all the available registers implemented in the gateway.

© HMS Industrial Networks S.L.U - All rights reserved
This information is subject to change without notice

3.6 *Points definition*

Every point defined in the gateway has the Modbus *Format, Point and R/W* features associated to it.

Each point defined in Intesis has the following Modbus features associated to it:

Feature	Description
#Bits	**One of the following bit lengths can be used:** • 1 bit • 16 bits • 32 bits
Data Coding Format	**One of the following Modbus data coding formats can be used:** • 16/32 unsigned • 16/32 bits signed (one's complement – C1) • 16/32 bits signed (two's complement – C2) • 16/32 bits Float • 16/ bits Bitfields • Error comm
Function code	**One of the following Modbus function codes can be used:** • 1- Read Coils • 2- Read Discrete Inputs • 3- Read Holding Registers • 4- Read Input Registers • 5- Write Single Coil • 6- Write Single Register • 15- Write Multiple Coils • 16- Write Multiple Registers
Byte Order	• Big Endian • Little Endian • Word Inverted Big Endian • Word Inverted Little Endian
Register Address	The Modbus register address inside the slave device for the point.
Bit inside the register	Bit inside the Modbus register (optional). The gateway allows bit decoding from generic 16 bits input/holding Modbus registers. *Bit coding into 16 bits input/holding Modbus registers is used for some devices to encode digital values into this type of registers, being these registers normally accessible using Modbus function codes 3 and 4 (read holding/input registers).*
Read/Write	0: Read 1: Write 2: Read / Write

© HMS Industrial Networks S.L.U - All rights reserved
This information is subject to change without notice

4 Connections

Find below information regarding the Intesis connections available.

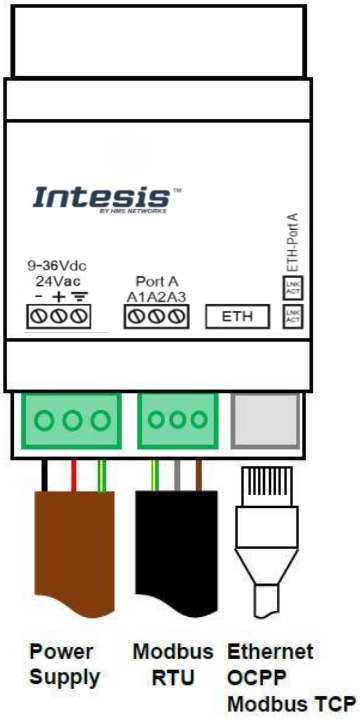

Fig 3.1 Connections

Power Supply
Must use NEC Class 2 or Limited Power Source (LPS) and SELV rated power supply. Respect polarity applied of terminals (+) and (-). Be sure the voltage applied is within the range admitted (check table below). The power supply can be connected to earth but only through the negative terminal, never through the positive terminal.

Ethernet / Modbus TCP / OCPP
Connect the cable coming from the IP network to the connector ETH of the gateway. Use an Ethernet CAT5 cable. If communicating through the LAN of the building, contact the network administrator and make sure traffic on the port used is allowed through all the LAN path (check the gateway user manual for more information). With factory settings, after powering up the gateway, DHCP will be enabled for 30 seconds. After that time, if no IP is provided by a DHCP server, the default IP 192.168.100.246 will be set

Port Modbus RTU
Connect the EIA485 bus to connectors A3 (B+), A2 (A-) and A1 (SNGD) of Intesis gateway's Port. Respect the polarity.

***Note for EIA485 port**; Remember the characteristics of the standard EIA485 bus: maximum distance of 1200 meters, maximum 32 devices connected to the bus, and in each end of the bus it must be a termination resistor of 120 ΩNot used.*

Ensure proper clearance for cables (see section 8).

Terminal Wiring (for power supply and low-voltage signals)	Per terminal: solid wires or stranded wires (twisted or with ferrule) 1 core: 0.5mm^2… 2.5mm^2 2 cores: 0.5mm^2… 1.5mm^2 3 cores: not permitted
Power	1 x Plug-in screw terminal block (3 poles) Positive, Negative, Earth 9-36 VDC / 24 VAC / 50-60 Hz / 0.140 A / 1.7 W
Ethernet	1 x Ethernet 10/100 Mbps RJ45 2 x Ethernet LED: port link and activity
Port	1 x Serial EIA485 (Plug-in screw terminal block 3 poles) A1, A2, A3 (Reference ground or shield) 1500VDC isolation from other ports

© HMS Industrial Networks S.L.U - All rights reserved
This information is subject to change without notice

4.1 *Powering the device*

A power supply working with any of the voltage range allowed is needed (check section 5).

WARNING! To avoid earth loops that can damage the gateway and/or any other equipment connected to it, we strongly recommend:

- The use of DC power supplies, floating or with the negative terminal connected to earth. **Never use a DC power supply with the positive terminal connected to earth**.

4.2 *Connection to Modbus*

4.2.1 Modbus TCP

Connect the communication cable coming from the network HUB or switch to the ETH port of Intesis. The cable to be used shall be a straight Ethernet UTP/FTP CAT5 cable.

4.2.2 Modbus RTU

Connect the communication cable coming from the Modbus network to the port marked as Modbus of Intesis. Connect the EIA485 bus to connectors A3 (B+), A2 (A-) and A1 (SGND). Respect the polarity.

Observe standard EIA485 bus specifications: maximum distance of 1200 meters, maximum of 32 devices connected to the bus, and in each end of the bus it must be a termination 120 Ω resistor.

4.3 *Connection to the configuration tool*

This action allows the user to have access to configuration and monitoring of the device (more information can be found in the configuration tool User Manual). One method to connect to the PC can be used:

- **Ethernet:** Using gateway´s Ethernet port

5 Accessing the DIP switch and push button

To access the gateway's DIP switch block and push button, you must remove the gateway's main front cover. Use a small flathead screwdriver or a similar tool to proceed.

IMPORTANT! Proceed with caution to avoid damaging the gateway's PCB or housing.

After setting the switches or using the push button, close the housing again, ensuring the front cover is securely fixed in its position.

© HMS Industrial Networks S.L.U - All rights reserved
This information is subject to change without notice

5.1 *Setting the DIP switch*

The gateway has a DIP switch block dedicated to the EIA-485 port. The function of the DIP switch is to activate or deactivate the polarization (positions 1 and 2) and the termination resistor (position 3) of the port:

Binary value	Switches			Description
b0 .. b2	1	2	3	
0 0 X	OFF	OFF	X	No bus polarization (default value)
1 1 X	ON	ON	X	Bus polarization active
X X 0	X	X	OFF	120 Ω termination resistor inactive (default value) The gateway is not at one end of the EIA-485 bus
X X 1	X	X	ON	120 Ω termination resistor active. The gateway is at one end of the EIA-485 bus

IMPORTANT! The DIP switch configuration will only take effect after rebooting the gateway. To reboot the gateway, disconnect it from power and connect it again.

5.2 *Push button*

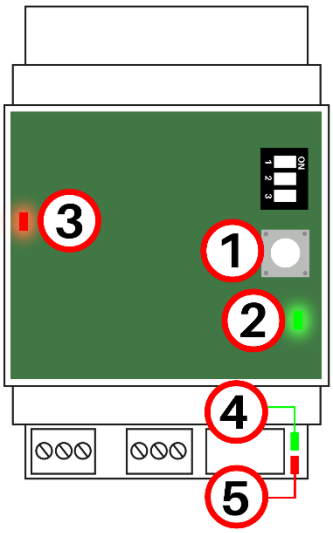

Use the push button (1) to reset the gateway to the factory settings:

1. Disconnect the gateway from power.
2. Press and hold the button.
3. Connect the gateway to power.

- The feedback LED (3) turns on solid red.
- The button LED (2) turns on solid green.
- The external LEDs (4) and (5) start a sequence, turning on and off alternately.

4. After 10 seconds, release the button.

- All LEDs keep performing as described in step 3. Then, they turn off, blink once, and behave as in normal operation: External LEDs (4) and (5) are off, the feedback LED (3) blinks green, and the button LED (2) is solid green.

© HMS Industrial Networks S.L.U - All rights reserved
This information is subject to change without notice

6 External LED indicators

The gateway's LEDs are placed next to the Ethernet port:

LED 1 (green)

LED 2 (red)

Besides, the Ethernet connector has its own LEDs:

LED 3 (orange)

LED 4 (green)

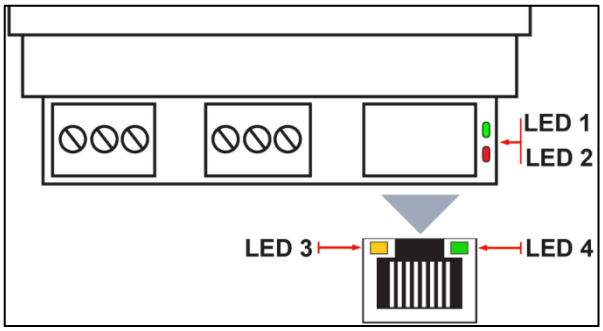

LED	Color	Description
LED 1 (Port A)	Green	**ON:** Connection with the OCPP system established **Blinking:** Receiving/transmitting OCPP packets
LED 2 (Ethernet)	Red	**Blinking**: Receiving/transmitting Modbus TCP packets
LED 3 (RJ45 – Speed)	Orange	**ON**: Connection to a switch, a hub, or a PC at 100 Mbps link speed. **OFF**: Connection not established, or established at 10 Mbps link speed.
LED 4 (RJ45 – Link/Activity)	Green	**ON**: Ethernet connection established **Blinking**: Ethernet activity **OFF**: No Ethernet connection established

© HMS Industrial Networks S.L.U - All rights reserved
This information is subject to change without notice

7 Technical specifications

Housing	Plastic, type PC (UL 94 V-0) Net dimensions (dxwxh): 93x53x58 mm Color: Light Grey. RAL 7035
Mounting	Wall DIN rail (recommended) EN60715 TH35
Terminal wiring	Per terminal: solid wires or stranded wires (twisted or with ferrule) • One core: 0.2mm^2 .. 2.5mm^2 (24 ..11 AWG) • Two cores: 0.2mm^2 .. 1.5mm^2 (24 ..15 AWG) • Three cores: Not permitted For distances longer than 3.05 meters (10 feet), use Class 2 cables.
Power	1 x Plug-in screw terminal block (3 poles) 9-36 VDC / 24 VAC / 50-60 Hz / 0.140 A / 1.7 W
Ethernet	1 x Ethernet 10/100 Mbps RJ45
Port A	1 x Serial EIA485 (Plug-in screw terminal block 3 poles) • SGND (reference ground or shield), A(-), B(+) • 1500VDC isolation from other ports
DIP switch	EIA-485 port polarization and termination: Positions 1 and 2: • On: Polarization active • Off: Polarization inactive (default) Position 3: • On: 120 Ω termination active • Off: 120 Ω termination inactive (default)
Push button	1 x Factory reset
LED indicators	2 x Communication status 2 x Ethernet link/speed
Operational temperature	0°C to +60°C
Operational humidity	5 to 95%, no condensation
Protection	IP20 (IEC60529)

© HMS Industrial Networks S.L.U - All rights reserved
This information is subject to change without notice

8 Dimensions

NET DIMENSIONS (HxWxD):

- Millimeters: 93 x 53 x 58 mm
- Inches: 3.7 x 2.1 x 2.3”

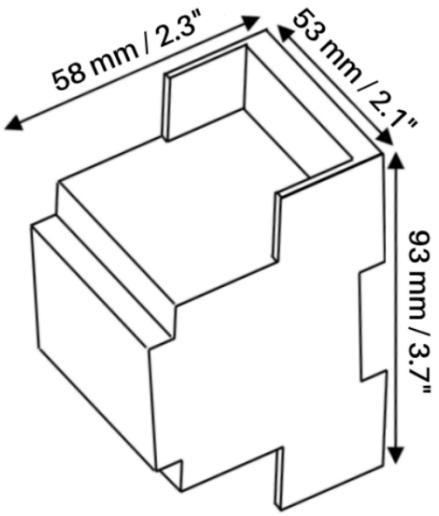

IMPORTANT! Leave enough clear space to wire the gateway easily and for the subsequent manipulation of elements.

© HMS Industrial Networks S.L.U - All rights reserved
This information is subject to change without notice