Modbus RTU (EIA-485) Interface for Panasonic and Sanyo air conditioners

Compatible with ECOi and PACi line models

USER MANUAL

Issue date: 09/2025 v2.8 ENGLISH

14 rue Edouard Petit
42000 St-Etienne

Tel : +33 477 92 03 56
Email : contact@rg2i.com
www.rg2i.com

Modbus RTU (EIA-485) Interface for Panasonic and Sanyo air conditioners
Compatible with ECOi and PACi line models

ORDER CODE	LEGACY ORDER CODE
INMBSPAN001R000	PA-RC2-MBS-1

© HMS Industrial Networks S.L.U - All rights reserved
This information is subject to change without notice

Important User Information

Disclaimer

The information in this document is for informational purposes only. Please inform HMS Industrial Networks of any inaccuracies or omissions found in this document. HMS Industrial Networks disclaims any responsibility or liability for any errors that may appear in this document.

HMS Industrial Networks reserves the right to modify its products in line with its policy of continuous product development. The information in this document shall therefore not be construed as a commitment on the part of HMS Industrial Networks and is subject to change without notice. HMS Industrial Networks makes no commitment to update or keep current the information in this document.

The data, examples and illustrations found in this document are included for illustrative purposes and are only intended to help improve understanding of the functionality and handling of the product. In view of the wide range of possible applications of the product, and because of the many variables and requirements associated with any particular implementation, HMS Industrial Networks cannot assume responsibility or liability for actual use based on the data, examples or illustrations included in this document nor for any damages incurred during installation of the product. Those responsible for the use of the product must acquire sufficient knowledge in order to ensure that the product is used correctly in their specific application and that the application meets all performance and safety requirements including any applicable laws, regulations, codes and standards. Further, HMS Industrial Networks will under no circumstances assume liability or responsibility for any problems that may arise as a result from the use of undocumented features or functional side effects found outside the documented scope of the product. The effects caused by any direct or indirect use of such aspects of the product are undefined and may include e.g. compatibility issues and stability issues.

© HMS Industrial Networks S.L.U - All rights reserved
This information is subject to change without notice

INDEX

1. Presentation 5
2. Connection 6
2.1 Connect to the AC indoor unit 6
2.2 Connection to the EIA-485 bus 7
3. Quick Start Guide 7
4. Modbus Interface Specification 8
4.1 Modbus physical layer 8
4.2 Modbus Registers 8
4.2.1 Control and status registers 8
4.2.2 Configuration Registers 11
4.2.3 Considerations on Temperature Registers 12
4.2.4 Special behavior – Outdoor demand rate 13
4.3 DIP Switch Configuration Interface 14
4.4 Implemented Functions 17
4.5 Device LED indicator 17
4.6 EIA-485 bus. Termination resistors and Fail-Safe Biasing mechanism 18
5. Mechanical and electrical features 19
6. List of supported AC Unit Types. 20
7. Error Codes 21

© HMS Industrial Networks S.L.U - All rights reserved
This information is subject to change without notice

1. Presentation

The INMBSPAN001R000 interfaces allow a complete and natural integration of ***Panasonic*** and ***Sanyo*** air conditioners into Modbus RTU (EIA-485) networks.

Compatible with all models of ECOi and PACi line

Reduced dimensions. 93 x 53 x 58 mm // 3.7" x 2.1" x 2.3"

- Quick and easy installation.
  Mountable on DIN rail, wall, or even inside the indoor unit of AC.
- External power not required.
- Direct connection to Modbus RTU (EIA-485) networks. Up to 63 INMBSPAN001R000 devices can be connected in the same network.
  INMBSPAN001R000 is a Modbus slave device.
- Direct connection to the AC indoor unit. Up to 16 AC indoor units can be connected to INMBSPAN001R000, controlling them as one (not individually).
- Configuration from both on-board DIP-switches and Modbus RTU.
- Total Control and Supervision.
- Real states of the AC unit's internal variables.
- Allows simultaneous use of the AC's remote controls and Modbus RTU.

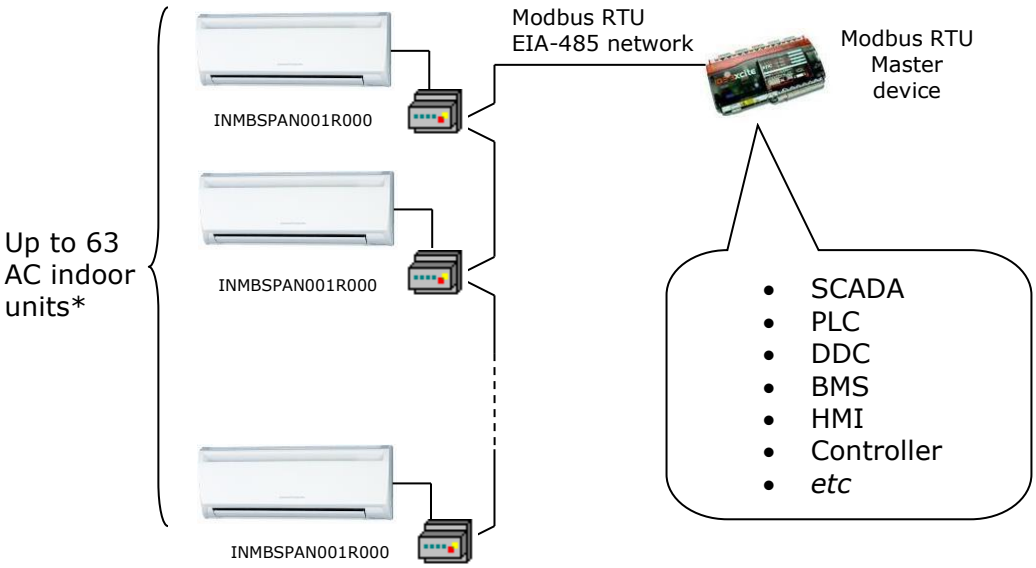

* Up to 63 Intesis devices can be installed in the same Modbus RTU bus. However, depending on the configured speed, the installation of Modbus Repeaters may be required

© HMS Industrial Networks S.L.U - All rights reserved
This information is subject to change without notice

2. Connection

The interface comes with a plug-in terminal block of 2 poles to establish direct connection with the AC indoor unit. It comes as well with a plug-in terminal block of 2 poles to establish direct connection with the Modbus RTU EIA-485 network.

2.1 Connect to the AC indoor unit

The INMBSPAN001R000 connects directly to the Panasonic R1R2 Bus, which is not provided within the interface. The recommended connection' methods are the following ones (details in Figure 2.1):

- **Wired remote control available. It is not recommended to install more than 1 Remote Controller in the bus R1R2.**
- **No remote control available**

Maximum R1R2 bus length is 500 meters / 1,640.42 ft. The bus has no polarity sensitivity.

Important: If a wired remote controller of the AC manufacturer is connected in the same bus, communication may shut down.

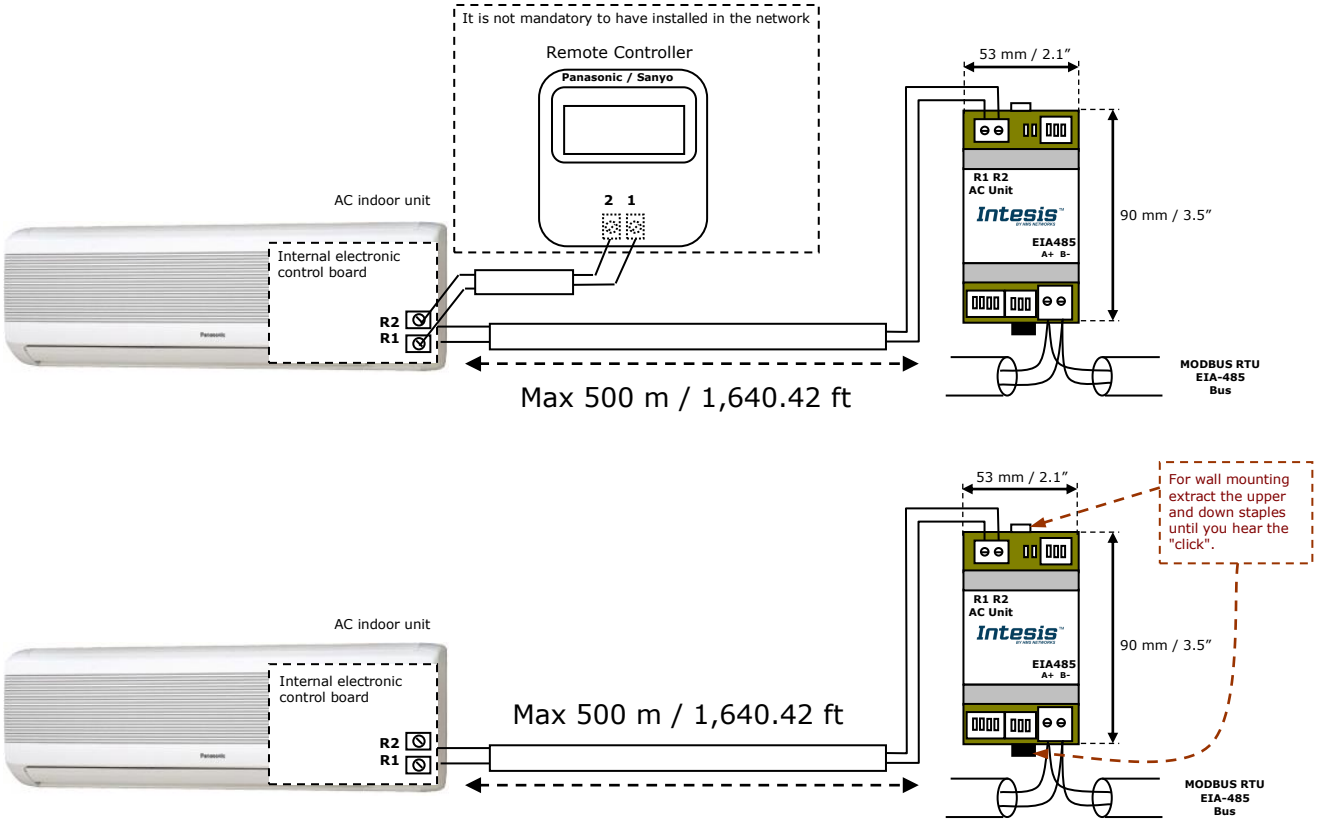

Figure 2.1 INMBSPAN001R000 connection diagram

© HMS Industrial Networks S.L.U - All rights reserved
This information is subject to change without notice

2.2 Connection to the EIA-485 bus

Connect the EIA-485 bus wires to the plug-in terminal block of INMBSPAN001R000 and keep the polarity on this connection (A+ and B-). Make sure that the maximum distance to the bus is 1,200 meters (3,937 ft). Loop or star typologies are not allowed in the case of the EIA-485 bus. A terminator resistor of 120Ω must be present at each end of the bus to avoid signal reflections. The bus needs a fail-safe biasing mechanism (see section 4.6 for more details).

3. Quick Start Guide

1. Disconnect the air conditioning from the Mains Power.

2. Attach the interface next to the AC indoor unit (wall mounting) following the instructions of the diagram below or install it inside the AC indoor unit (respect the safety instructions given).

3. Connect the R1R2 bus between the interface and the AC indoor unit following the instructions of the diagram. Screw each bare cable end in the corresponding R1R2 terminals of each device.

4. Connect the EIA-485 bus to the connector *EIA485* of the interface.

5. Close the AC indoor unit.

6. Check the DIP-Switch configuration of the Intesis interface and make sure it matches the current installation's parameters:

   By default, the interface is set to:

   - Modbus Slave Address ➔ 1
   - Modbus baud rate ➔ 9600 bps

   These parameters can be modified from SW4 and SW3 DIP-Switches.

   All other switch positions are set at low level (Off position ▮) by default.

   NOTE: All changes on the DIP-Switch configuration require a system power cycle to be applied.

7. Connect the AC system to Mains Power.

   IMPORTANT: The Intesis interface requires to be connected to the AC unit (powered) to start communicating.

© HMS Industrial Networks S.L.U - All rights reserved
This information is subject to change without notice

4. Modbus Interface Specification

4.1 Modbus physical layer

INMBSPAN001R000 implements a Modbus RTU (Slave) interface, to be connected to an EIA-485 line. It performs 8N2 communication (8 data bits, no parity and 2 stop bit) with several available baud rates (2400 bps, 4800 bps, 9600 bps -default-, 19200 bps, 38400 bps, 57600 bps, 76800 bps and 115200 bps). It also supports 8N1 communication (8 data bits, no parity and 1 stop bit).

NOTE: The gateway automatically detects the communication type (8N2 or 8N1) and sets itself accordingly. No action is needed.

4.2 Modbus Registers

All registers are type "16-bit unsigned Holding Register" and they use the *Modbus big endian* notation.

4.2.1 Control and status registers

Register Address (protocol address)	Register Address (PLC address)	R/W	Description
0	1	R/W	AC unit On/Off ▪ 0: Off ▪ 1: On
1	2	R/W	AC unit Mode[1] ▪ 0: Auto ▪ 1: Heat ▪ 2: Dry ▪ 3: Fan ▪ 4: Cool
2	3	R/W	AC unit Fan Speed[1] ▪ 0: Auto ▪ 1: Low ▪ 2: Mid ▪ 3: High
3	4	R/W	AC unit Vane Position[1] ▪ 0: Auto ▪ 1: POS1 (Horizontal) ▪ 2: POS2 (Horizontal) ▪ 3: POS3 (Med) ▪ 4: POS4 (Vert) ▪ 5: POS5 (Vert) ▪ 10: Swing
4	5	R/W	AC unit Temperature Setpoint[1,2,3] ▪ -32768 (Initialization value) ▪ 16..32ºC (ºC/x10ºC) ▪ 61..90ºF

[1] Available values will depend on the AC unit mode. Check the AC unit model functions in its user manual to know the possible values for this register.
[2] Magnitude for this register can be adjusted to Celsius x 1ºC, Celsius x 10ºC (default) or Fahrenheit. See section 0 for more information.
[3] It is not possible turn to x10 the value shown in Fahrenheit.

© HMS Industrial Networks S.L.U - All rights reserved
This information is subject to change without notice

Register Address (protocol address)	Register Address (PLC address)	R/W	Description
5	6	R/W	AC unit Temperature reference[1,2,3,4] ▪ -32768: Initialization value. Value invalid, which comes from the IU's sensor. If the value that is shown in register 22 (23 PLC) is valid, the address is going to take this value. ▪ Ranges are specific from Manufacturer (ºC/x10ºC/ºF)
6	7	R/W	Window Contact ▪ 0: Closed (Default) ▪ 1: Open
7	8	R/W	INMBSPAN001R000 Disablement[5] ▪ 0: INMBSPAN001R000 enabled (Default) ▪ 1: INMBSPAN001R000 disabled
8	9	R/W	AC Remote Control Disablement[5] ▪ 0: Remote Control enabled (Default) ▪ 1: Remote Control disabled
9	10	R/W	AC unit Operation Time[5] ▪ 0..65535 (hours). Counts the time the AC unit is in "On" state.
10	11	R	AC unit Alarm Status ▪ 0: No alarm condition ▪ 1: Alarm condition
11	12	R	Error Code[6] ▪ 0: No Error active ▪ 65535 (-1): Error in the communication of INMBSPAN001R000 with the AC unit ▪ Any other error present, see the table at the end of this document.
22	23	R/W	Indoor unit´s ambient temperature from external sensor (at Modbus side)[4,7] ▪ -32768: Initialization value. No temperature is being provided from an input sensor. There's no input sensor. ▪ Other: (ºC/x10ºC/ºF)
23	24	R	AC setpoint temperature[1,2,3,4,7] ▪ When no external temperature is provided, this read-only register will have the same value as register 5 (PLC addressing). In all cases, it will show the current setpoint in the indoor unit. ▪ Ranges specific from Manufacturer (ºC/x10ºC/ºF)
24	25	R	Current AC max setpoint[1,2,3,4] ▪ -32768 (Initialization value) ▪ Ranges are specific from Manufacturer (ºC/x10ºC/ºF)
25	26	R	Current AC min setpoint[1,2,3,4] ▪ -32768 (Initialization value) ▪ Ranges are specific from Manufacturer (ºC/x10ºC/ºF)

[4] The temperature's value shown has decimal precision(x0,5ºC)
[5] This value is stored in non-volatile memory
[6] See section 7 for possible error codes and their explanation
[7] See section 4.2.3 for more information

© HMS Industrial Networks S.L.U - All rights reserved
This information is subject to change without notice

Register Address (protocol address)	Register Address (PLC address)	R/W	Description
31	32	R	Status (feedback) ▪ 0: Not active (Default value) ▪ 1: Active (A window is open)
37	38	R	Auto Mode ▪ 0: Auto ▪ 1: Heat ▪ 2: Dry ▪ 3: Fan ▪ 4: Cool
40	41	R	Window contact ON/OFF Disablement ▪ 0: Window contact is not disabling option On/Off at this moment (Default value) ▪ 1: Window contact is disabling option On/Off at this moment
44	45	R	Filter status ▪ 0: Off (Default value) ▪ 1: Lit
65	66	R	Input reference temp. (feedback)[1,2,3,4] ▪ -32768 (Initialization value) ▪ Any: (ºC/x10ºC/ºF)
66	67	R	Return Path temperature[1,2,3,4] ▪ -32768 (Initialization value) ▪ Any: (ºC/x10ºC/ºF)
97	98	R/W	Block Periodic Sendings[5,8,9] ▪ 0: Non-blocked (Default value) ▪ 1: Blocked
4001	4002	R	Indoor Unit Master Force Thermo Off[10] ▪ 0: No Limit ▪ 1: Thermo Forced Off
4002	4003	R	Indoor Unit Master Error Code[10] ▪ 0: No Error active ▪ 65535 (-1): Communication Error ▪ Any other error present, check the Manual of the Indoor Unit.
4003	4004	R	Indoor Unit Master Setpoint Temp.[1,2,3,4,10] ▪ -32768 (Initialization value) ▪ Any: (ºC/x10ºC/ºF)
4004	4005	R	Indoor Unit Master Room Temp.[1,2,3,10] ▪ -32768 (Initialization value) ▪ Any: (ºC/x10ºC/ºF)
4011	4012	R	Indoor Unit Slave Force Thermo Off[10] ▪ 0: No Limit ▪ 1: Thermo Forced Off
4012	4013	R	Indoor Unit Slave Error Code[10] ▪ 0: No Error active ▪ 65535 (-1): Communication Error ▪ Any other error present, check the Manual of the Indoor Unit.

[8] If the register is configured as "0:Non-blocked", all commands received from Modbus will be sent to the AC system. If "1: Blocked", commands from Modbus will only be sent to the AC system if they differ from the previous value.
[9] This register applies on firmware version 2.3 onwards
[10] Check Section 4.2.4 to know more about the applications of Master/Slave on indoor units.

© HMS Industrial Networks S.L.U - All rights reserved
This information is subject to change without notice

Register Address (protocol address)	Register Address (PLC address)	R/W	Description
4013	4014	R	Indoor Unit Slave Setpoint Temp.[1,2,3,4,10] ▪ -32768 (Initialization value) ▪ Any: (ºC/x10ºC/ºF)
4014	4015	R	Indoor Unit Slave Room Temp.[1,2,3,4,10] ▪ -32768 (Initialization value) ▪ Any: (ºC/x10ºC/ºF)

4.2.2 Configuration Registers

Register Address (protocol address)	Register Address (PLC address)	R/W	Description
13	14	R/W	"Open Window" switch-off timeout[11] ▪ 0..30 (minutes) ▪ Factory setting: 30 (minutes)
14	15	R	Modbus RTU baud-rate ▪ 2400bps ▪ 4800bps ▪ 9600bps (Default value) ▪ 19200bps ▪ 38400bps ▪ 57600bps ▪ 76800bps ▪ 115200bps
15	16	R	Modbus Slave Address ▪ 1..63
21	22	R	Max number of fan speeds
43	44	W	Filter reset ▪ 1: Reset
48	49	R	Switch value
49	50	R	Device ID: 0x1500
50	51	R	Software version
67	68	R	Number of Indoor Units connected
81	82	R	Error address ▪ Provides the indoor unit's number which is showing the error
82	83	R/W	Outdoor Demand Rate DV ▪ 0x00: Thermo Off ▪ 0xFF: No limit (Normal operation) ▪ 40..150: Operating range of the equipment (Current's magnitude (A))
83	84	R	Outdoor Demand Rate Max Value[12]
84	85	R	Outdoor Demand Rate Min Value[12]
99	100	W	Reset ▪ 1: Reset
1150	1151	R/W	Machine Mode ▪ 0: Normal (default value) ▪ 1: Autochangeover ▪ 2: Limited setpoint

[11] Once window contact is open, a count-down to switch off the AC Unit will start from this configured value.
[12] This value is shown as portions of 100%. Check the explanation in Section 4.2.4 of this document

© HMS Industrial Networks S.L.U - All rights reserved
This information is subject to change without notice

1151	1152	R/W	Machine Threshold Cool[13] ▪ Default value: 26°C/79°F
1152	1153	R/W	Machine Threshold Heat[13] ▪ Default value: 21°C/70°F
1153	1154	R/W	Machine Min Setpoint Cool[14] ▪ Default value: 24°C/75°F
1154	1155	R/W	Machine Max Setpoint Cool[14] ▪ Default value: 28°C/82°F
1155	1156	R/W	Machine Min Setpoint Heat[14] ▪ Default value: 19°C/66°F
1156	1157	R/W	Machine Max Setpoint Heat[14] ▪ Default value: 23°C/73°F
4000	4001	R	Indoor Unit Master Address[10]
4010	4011	R	Indoor Unit Slave Address[10]

4.2.3 Considerations on Temperature Registers

- **AC unit temperature setpoint (R/W)**
  (register 4 – in Protocol address / register 5 – in PLC address):
  This is the adjustable temperature setpoint value that must be required by the user.

  This register can be read (Modbus function 3 or 4) or written (Modbus functions 6 or 16).

  A remote controller connected to the Panasonic/Sanyo indoor unit will report the same temperature setpoint value as this register.

- **AC unit temperature reference (R)**
  (register 5 – in Protocol address / register 6 – in PLC address):
  This register reports the temperature that is currently used by the Panasonic/Sanyo indoor unit as the reference of its own control loop.

  If the value on register 22 is valid (different from 0x8000), it will report the value from this register. If not, it will show the indoor unit reference's temperature.

  It is a read-only register (Modbus functions 3 or 4).

- **AC unit external temperature reference (R/W)**
  (register 22 – in Protocol address / register 23 – in PLC address):
  This register reports the temperature from an external sensor in the Modbus side. If valid value is received, the Modbus register will indicate a 0x8000 value.

  This register can be read (Modbus function 3 or 4) or written (Modbus functions 6 or 16).

- **Current setpoint in AC indoor unit (R)**
  (register 23 – In Protocol address / register 24 – in PLC address)**:**
  This register will show the same value as in register 4 (protocol address). The reference temperature from the remote controller is sent directly to the AC unit to be applied in the control loop.

  It is a read-only register (Modbus functions 3 or 4).

[13] Only applies when Machine Mode is set to 1 (Autochangeover).
[14] Custom limits. These registers only apply when Machine Mode is set to 2 (Limited setpoint).

© HMS Industrial Networks S.L.U - All rights reserved
This information is subject to change without notice

Moreover, notice that temperature's values of all these four registers are expressed according to the temperature´s format configured through its onboard DIP-Switches (See Section 4.3)These following formats are possible:

- **Celsius value**: Value in Modbus register is the temperature value in Celsius (i.e. a value "22" in the Modbus register must be interpreted as 22ºC).
- **Decicelsius value**: Value in Modbus register is the temperature value in decicelsius (i.e. a value "220" in the Modbus register must be interpreted as 22.0ºC).
- **Fahrenheit value**: Value in Modbus register is the temperature value in Fahrenheit (i.e. a value "72" in the Modbus register must be interpreted as 72ºF (~22ºC).

4.2.4 Special behavior – Outdoor demand rate

This feature is related to a kind of control that allows to obtain a more accurate feedback of supply air's temperature based on the current system's performance and condition. It is as well a feature related to the integration in the smart building control's system with the gateway. (For example, in case that it could exist already some smart electric price's schedules, when the electricity's price varies during all day).

The feature of the Outdoor demand rate is related as well to the feature Master/Slave of the AC system from Panasonic/Sanyo.

The roles Master/Slave of the indoor units are related to the features Back Up and Rotation Function. To apply these functions properly, two independent indoor units (each one belongs to a different AC system) must be connected together (in pairs) and name one indoor unit as Master and the other one as Slave.

Once each indoor unit had been named, it's necessary to verify that each one of the two indoor units match with the Modbus registers properly. The registers with Master category belong to the indoor unit named as Master and the registers with Slave category belong to the indoor unit named as Slave.

The three registers related to the Outdoor Demand Rate can be read and written. These ones are configurable thanks to a Remote Controller from Panasonic/Sanyo with Back Up and Rotation Function.

© HMS Industrial Networks S.L.U - All rights reserved
This information is subject to change without notice

4.3 DIP Switch Configuration Interface

All the configuration values on INMBSPAN001R000 can be written and read from Modbus interface. Otherwise, some of them can also be setup from its on-board DIP switch interface. The device has DIP switches SW1, SW3 and SW4 on the following locations:

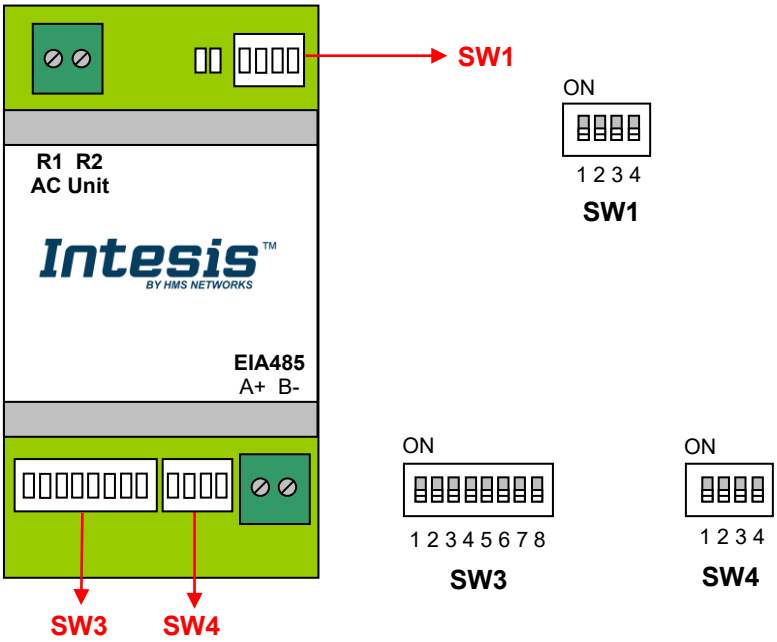

The following tables apply to the interface´s configuration through DIP switches:

SW1 – AC indoor unit's features

SW1-P1..4	Description
ON	Outdoor Demand rate not activated (Default value)
ON	Outdoor Demand rate activated
ON	Not used (Default value)
ON	Not used
ON	Not used (Default value)
ON	Not used
ON	Not used (Default value)
ON	Not used

Table 4.1 SW1: AC indoor unit´s features

© HMS Industrial Networks S.L.U - All rights reserved
This information is subject to change without notice

SW3/SW4 – Baud rate configuration

SW3-P7..8	SW4-P3	Description
		2400bps
		4800bps
		9600bps (Default value)
		19200bps
		38400bps
		57600bps
		76800bps
		115200bps

Table 4.2 SW3-SW4: Modbus baud rate

SW4 – Degrees/Decidegrees (x10), temperature magnitude (ºC/ºF) and EIA-485 termination resistor.

SW4-P1..2-4	Description
	Temperature values in Modbus register are represented in degrees (x1) (Default value)
	Temperature values in Modbus register are represented in decidegrees (x10)
	Temperature values in Modbus register are represented in Celsius degrees (Default value)
	Temperature values in Modbus register are represented in Fahrenheit degrees
	EIA-485 bus without termination resistor (Default value)
	Internal termination resistor of 120Ω connected to EIA-485 bus

Table 4.3 SW4: Temperature and termination resistor configuration

© HMS Industrial Networks S.L.U - All rights reserved
This information is subject to change without notice

SW3 – Modbus Slave address

Add	SW3-P1..6	*Add*	SW3-P1..6	*Add*	SW3-P1..6	*Add*	SW3-P1..6	*Add*	SW3-P1..6
0		**13**		**26**		**39**		**52**	
1		**14**		**27**		**40**		**53**	
2		**15**		**28**		**41**		**54**	
3		**16**		**29**		**42**		**55**	
4		**17**		**30**		**43**		**56**	
5		**18**		**31**		**44**		**57**	
6		**19**		**32**	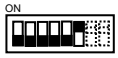	**45**		**58**	
7		**20**		**33**	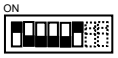	**46**		**59**	
8		**21**		**34**	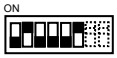	**47**		**60**	
9		**22**		**35**		**48**		**61**	
10		**23**		**36**		**49**		**62**	
11		**24**		**37**		**50**		**63**	
12		**25**		**38**		**51**	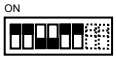		

Table 4.4 SW3: Modbus slave address

© HMS Industrial Networks S.L.U - All rights reserved
This information is subject to change without notice

4.4 Implemented Functions

INMBSPAN001R000 implements the following standard Modbus functions:

- *3: Read Holding Registers*
- *4: Read Input Registers*
- *6: Write Single Register*
- *16: Write Multiple* Registers (Despite this function is allowed, the interface does not allow to write operations on more than 1 register with the same request, this means that length field should be always be 1 when this function is being used in case of writing)

4.5 Device LED indicator

The device includes two LED indicators to show all the possible operational states. In the following table there are written the indicators which can be performed and their meaning.

L1 (green LED)

Device status	LED indication	ON / OFF Period	Description
During not normal operation	LED blinking	500ms ON / 500ms OFF	Communication error
During normal operation	LED flashing	100ms ON / 1900ms OFF	Normal operation (configured and working properly)

L2 (red LED)

Device status	LED indication	ON / OFF Period	Description
During not normal operation	LED Pulse	3sec ON / --- OFF	Under voltage

L1 (green LED) & L2 (red LED)

Device status	LED indication	ON / OFF Period	Description
During normal operation	LED Pulse	5sec ON / --- OFF	Device Start-up
During not normal operation	LED alternatively blinking	500ms ON / 500ms OFF	EEPROM failure

© HMS Industrial Networks S.L.U - All rights reserved
This information is subject to change without notice

4.6 EIA-485 bus. Termination resistors and Fail-Safe Biasing mechanism

EIA-485 bus requires a 120Ω terminator resistor at each end of the bus to avoid signal reflections.

In order to prevent fail status detected by the receivers, which are *"listening" the bus,* when all the transmitters' outputs are in three-state (high impedance), it is also required a fail-safe biasing mechanism. This mechanism provides a safe status (a correct voltage level) in the bus when all the transmitters' outputs are in three-state. This mechanism must be supplied by the Modbus Master.

The INMBSPAN001R000 device includes an on-board terminator resistor of 120Ω that can be connected to the EIA-485 bus by using DIP-switch SW4.

Some Modbus RTU EIA-485 Master devices can provide also internal 120Ω terminator resistor and/or fail-safe biasing mechanism (Check the technical documentation of the Master device connected to the EIA-485 network in each case).

© HMS Industrial Networks S.L.U - All rights reserved
This information is subject to change without notice

5. Mechanical and electrical features

Enclosure	Plastic, type PC (UL 94 V-0) Net dimensions (dxwxh): 93 x 53 x 58 mm / 3.7" x 2.1" x 2.3" Color: Light Grey. RAL 7035	Operation Temperature	0ºC to +60ºC
Weight	85 g.	Stock Temperature	-20ºC to +85ºC
Mounting	Wall DIN rail EN60715 TH35.	Operational Humidity	<95% RH, non-condensing
Terminal Wiring (for low-voltage signals)	For terminal: solid wires or stranded wires (twisted or with ferrule) 1 core: 0.5mm^2… 2.5mm^2 2 cores: 0.5mm^2… 1.5mm^2 3 cores: not permitted	Stock Humidity	<95% RH, non-condensing
Modbus RTU port	1 x Serial EIA485 Plug-in screw terminal block (2 poles): A, B Compatible with Modbus RTU EIA-485 networks	Isolation voltage	1500 VDC
AC unit port	1 x R1R2 bus Plug-in screw terminal block (2 poles): R1, R2 Compatible with Panasonic/Sanyo networks	Isolation resistance	1000 MΩ
Switch 1 (SW1)	1 x DIP-Switch for AC features	Protection	IP20 (IEC60529)
Switch 3 (SW3)	1 x DIP-Switch for Modbus RTU settings	LED indicators	2 x Onboard LED - Operational status
Switch 4 (SW4)	1 x DIP-Switch for extra functions		

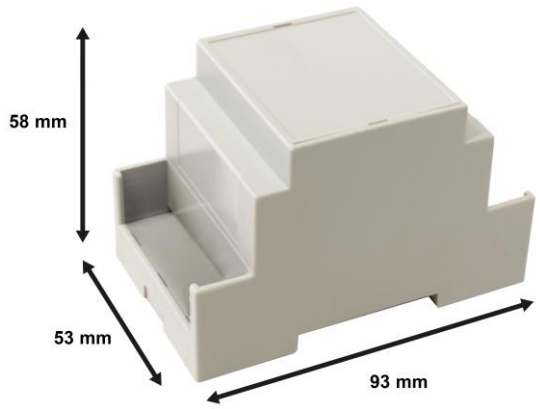

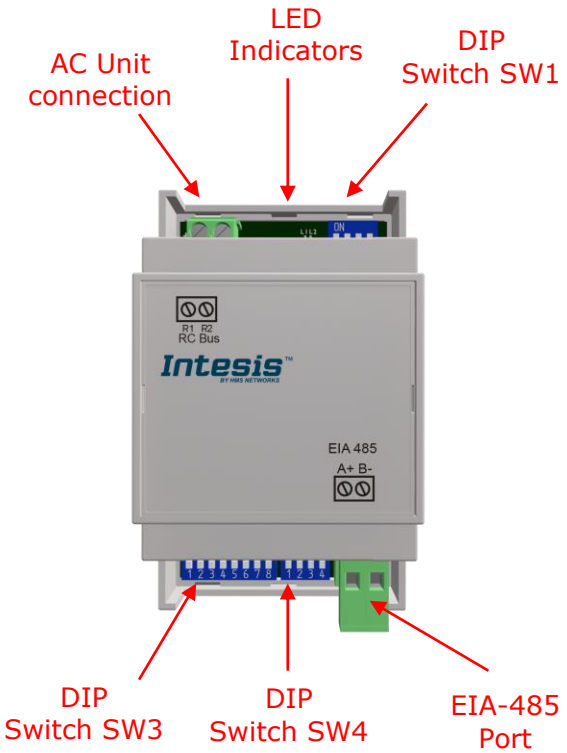

© HMS Industrial Networks S.L.U - All rights reserved
This information is subject to change without notice

6. List of supported AC Unit Types.

A list of Panasonic and Sanyo indoor unit model references compatible with INMBSPAN001R000 and their available features can be found in:

Panasonic:
https://www.intesis.com/docs/compatibilities/inxxxpan001rx00_compatibility

Sanyo:
https://www.intesis.com/docs/compatibilities/inxxxpan001rx00_sanyo_compatibility

© HMS Industrial Networks S.L.U - All rights reserved
This information is subject to change without notice

7. Error Codes

ErrorCode	Error CodeM	Error in RC	Error Category	Error Description
0	N/A	N/A	INMBSPAN001R000	No active error
01	A01	A01	GHP Engine Issues	GHP - Engine oil pressure fault
02	A02	A02		GHP - Engine oil level fault
03	A03	A03		GHP - Engine over speed
04	A04	A04		GHP - Engine under speed
05	A05	A05		GHP - Ignition power supply failure
06	A06	A06		GHP - Engine start up failure
07	A07	A07		GHP - Fuel gas valve failure
08	A08	A08		GHP - Engine stalled
09	A09	A09		GHP - Engine overload
0A	A10	A10		GHP - High exhaust gas temp
0B	A11	A11		GHP - Engine oil level failure
0C	A12	A12		GHP - Throttle actuator fault
0D	A13	A13		GHP - Fuel gas valve adjustment failure
0E	A14	A14		GHP - Engine oil pressure sensor fault
0F	A15	A15		GHP - Starter power output short circuit
10	A16	A16		GHP - Starter motor locked
11	A17	A17		GHP - Starter current (CT) coil failed
13	A19	A19		GHP - Wax Valve (3 Way) fault
14	A20	A20		GHP - Cooling water temp high
15	A21	A21		GHP - Cooling water level fault
16	A22	A22		GHP - Cooling water pump fault
17	A23	A23		GHP - Engine crank angle sensor failure
18	A24	A24		GHP - Engine cam angle sensor failure
19	A25	A25		GHP - Clutch fault
1A	A26	A26		GHP - Misfire
1B	A27	A27		GHP - Catalyst temperature fault
1C	A28	A28		GHP - Generator fault
1D	A29	A29		GHP - Converter fault
1E	A30	A30		GHP - Fuel gas pressure low
21	C01	C01	Central Controller Issues	Duplicated setting of control address
22	C02	C02		Central control number of units mis-matched

© HMS Industrial Networks S.L.U - All rights reserved
This information is subject to change without notice

23	C03	C03		Incorrect wiring of central control
24	C04	C04		Incorrect connection of central control
25	C05	C05		System Controller fault, error in transmitting comms signal, i/door or o/door unit not working, wiring fault
26	C06	C06		System Controller fault, error in receiving comms signal, i/door or o/door unit not working, wiring fault, CN1 not connected correctly
2C	C12	C12		Batch alarm by local controller
30	C16	C16		Transmission error from adaptor to unit
31	C17	C17		Reception error to adaptor from unit
32	C18	C18		Duplicate central address in adaptor
33	C19	C19		Duplicate adaptor address
34	C20	C20		Mix of PAC & GHP type units on adaptor
35	C21	C21		Memory fault in adaptor
36	C22	C22		Incorrect address setting in adaptor
37	C23	C23		Host terminal software failure
38	C24	C24		Host terminal hardware failure
39	C25	C25		Host terminal processing failure
3A	C26	C26		Host terminal communication failure
3C	C28	C28		Reception error of S-DDC from host terminal
3D	C29	C29		Initialization failure of S-DDC
3F	C31	C31		Configuration change detected by adaptor
41	E01	E01	Addressing and Communication Problems	Remote control detecting error from indoor unit, Address not set/Auto address failed. Check interconnecting wiring etc. Re-address system.
42	E02	E02		Remote detecting error from indoor unit,
43	E03	E03		Indoor unit detecting error from remote,
44	E04	E04		Indoor seeing error from outdoor. Qty of i/d units connected are less than qty set. Check; all i/d units are ON, reset turn off all units wait 5min power up
45	E05	E05		Indoor unit detecting error from outdoor unit, Error in sending comms signal
46	E06	E06		Outdoor unit detecting error from indoor unit, Error in receiving comms signal
47	E07	E07		Outdoor unit detecting error from indoor unit, Error in sending comms signal
48	E08	E08		Incorrect setting indoor/controller, Indoor address duplicated
49	E09	E09		Incorrect setting indoor/controller, Remote address duplicated or IR wireless controller not disabled
4A	E10	E10		Indoor unit detecting error from 'option' plug, Error in sending comms signal

© HMS Industrial Networks S.L.U - All rights reserved
This information is subject to change without notice

4B	E11	E11		Indoor unit detecting error from 'option' plug, Error in receiving comms signal
4C	E12	E12		Auto addressing failed, Auto address connector CN100 shorted during auto addressing
4D	E13	E13		Indoor unit failed to send signal to remote controller
4E	E14	E14		Setting Failure, Duplication of master indoor units
4F	E15	E15		Auto addressing failed, Number of indoor units connected are less than number set
50	E16	E16		Auto addressing failed, Number of indoor units connected are more than number set
51	E17	E17		Group control wiring error, Main indoor unit not sending signal for sub indoor units
52	E18	E18		Group control wiring error, Main indoor unit not receiving signal for sub indoor units
54	E20	E20		Auto addressing failed, No indoor units connected
58	E24	E24		Auto addressing failed, Error on sub outdoor unit
59	E25	E25		Auto addressing failed, Error on outdoor unit address setting
5A	E26	E26		Auto addressing failed, Quantity of main and sub outdoor units do not correspond to the number set on main outdoor unit P.C.B.
5D	E29	E29		Auto addressing failed, Sub outdoor unit not receiving comms for main outdoor unit
5F	E31	E31		Between units, Comms failure with MDC, does E31 remain after power is re-instated? If so replace PCB. & power PCB
61	F01	F01	Sensor Faults	Indoor Heat Exch inlet temp sensor failure (E1)
62	F02	F02		Indoor Heat Exch freeze temp sensor failure (E2)
63	F03	F03		Indoor Heat Exch outlet temp sensor failure (E3)
64	F04	F04		Outdoor Discharge temp sensor failure (TD) or (DISCH1)
65	F05	F05		Outdoor Discharge temp sensor failure (DISCH2)
66	F06	F06		Outdoor Heat Exch temp sensor failure (C1) or (EXG1)
67	F07	F07		Outdoor Heat Exch temp sensor failure (C2) or (EXL1)
68	F08	F08		Outdoor Air temp sensor failure (TO)
6A	F10	F10		Indoor inlet temp sensor failure
6B	F11	F11		Indoor outlet temp sensor failure
6C	F12	F12		Outdoor Intake sensor failure (TS)
6D	F13	F13		GHP - Cooling water temperature sensor failure
70	F16	F16		Outdoor High pressure sensor failure
71	F17	F17		GHP - Cooling water temperature sensor fault
72	F18	F18		GHP - Exhaust gas temperature sensor fault

© HMS Industrial Networks S.L.U - All rights reserved
This information is subject to change without notice

74	F20	F20		GHP Clutch coil temperature fault
77	F23	F23		Outdoor Heat Exch temp sensor failure (EXG2)
78	F24	F24		Outdoor Heat Exch temp sensor failure (EXL2)
7D	F29	F29		Indoor EEPROM error
7E	F30	F30		Clock Function (RTC) fault
7F	F31	F31		Outdoor EEPROM error
81	H01	H01	Compressor Issues	Compressor Fault, Over current (Comp1)
82	H02	H02		Compressor Fault, Locked rota current detected (Comp1)
83	H03	H03		Compressor Fault, No current detected (Comp1)
85	H05	H05		Compressor Fault, Discharge temp not detected (Comp1)
86	H06	H06		Compressor Fault, Low Pressure trip
87	H07	H07		Compressor Fault, Low oil level
88	H08	H08		Compressor Fault, Oil sensor Fault (Comp1)
8B	H11	H11		Compressor Fault, Over current (Comp2)
8C	H12	H12		Compressor Fault, Locked rota current detected (Comp2)
8D	H13	H13		Compressor Fault, No current detected (Comp2)
8F	H15	H15		Compressor Fault, Discharge temp not detected (Comp2)
95	H21	H21		Compressor Fault, Over current (Comp3)
96	H22	H22		Compressor Fault, Locked rota current detected (Comp3)
97	H23	H23		Compressor Fault, No current detected (Comp3)
99	H25	H25		Compressor Fault, Discharge temp not detected (Comp3)
9B	H27	H27		Compressor Fault, Oil sensor fault (Comp2)
9C	H28	H28		Compressor Fault. Oil sensor (connection failure)
9F	H31	H31		Compressor Fault. IPM trip (IMP current on temperature)
C1	L01	L01	Incorrect Settings	Setting Error, Indoor unit group setting error
C2	L02	L02		Setting Error, Indoor/outdoor unit type/model miss-matched
C3	L03	L03		Duplication of main indoor unit address in group control
C4	L04	L04		Duplication of outdoor unit system address
C5	L05	L05		2 or more controllers have been set as 'priority' in one system - shown on controllers set as 'priority'
C6	L06	L06		2 or more controllers have been set as 'priority' in one system - shown on controllers not set as 'priority'
C7	L07	L07		Group wiring connected on and individual indoor

© HMS Industrial Networks S.L.U - All rights reserved
This information is subject to change without notice

				unit
C8	L08	L08		Indoor unit address/group not set
C9	L09	L09		Indoor unit capacity code not set
CA	L10	L10		Outdoor unit capacity code not set
CB	L11	L11		Group control wiring incorrect
CD	L13	L13		Indoor unit type setting error, capacity
CF	L15	L15		Indoor unit paring fault
D0	L16	L16		Water heat exch unit setting failure
D1	L17	L17		Miss-match of outdoor unit with different refrigerant
D2	L18	L18		4-way valve failure
D3	L19	L19		Water heat exch unit duplicated address
D5	L21	L21		Gas type setup failure
D9	L25	L25		Indoor unit, hydrokit model, Unmatched remote controller
E1	P01	P01	Indoor Unit Problems	Indoor unit fault, Fan motor thermal overload
E2	P02	P02		Outdoor unit fault, Compressor motor thermal overload, over or under voltage
E3	P03	P03		Outdoor unit fault, Compressor discharge temperature too high (Comp1) over 111 ºC. Low on ref gas, exp valve, pipework damage.
E4	P04	P04		Outdoor unit fault, High pressure trip
E5	P05	P05		Outdoor unit fault, Open phase on power supply. Check power on each phase, inverter pcb, control pcb
E7	P07	P07		Indoor unit, hydrokit model, Abnormal internal heater overload
E9	P09	P09		Indoor unit fault, air-to-air unit: Ceiling panel incorrectly wired, hydrokit model: Abnormal water flow
EA	P10	P10		Indoor unit fault, Condensate float switch opened
EB	P11	P11		Air-to-water indoor unit low temp (frost protection) fault
EC	P12	P12		Indoor unit fault, air-to-air unit: Fan DC motor fault, hydrokit model: Abnormal water pump speed
EE	P14	P14		Input from leak detector (If fitted)
EF	P15	P15		Refrigerant loss, high discharge temp and EEV wide open and low compressor current draw.
F0	P16	P16		Outdoor unit fault, Open phase on compressor power supply
F1	P17	P17		Outdoor unit fault, Compressor discharge temperature too high (Comp2) over 111 degC. Low on ref gas, exp valve, pipework damage.
F2	P18	P18		Outdoor unit fault, By-pass valve failure
F3	P19	P19		Outdoor unit fault, 4 way valve failure, i/door temp

© HMS Industrial Networks S.L.U - All rights reserved
This information is subject to change without notice

				rises in cooling or fills in heating. Check wiring, coil, pcb output, valve operation.
F4	P20	P20		Ref gas, high temp/pressure fault, heat exch temp high C2, 55-60 degC, cooling over-load, sensor fault.
F6	P22	P22		Outdoor unit fan motor fault, fan blade jammed, check connections, does fan turn freely, motor resistance 30-40ohm on each pair, no fan fault, yes pcb fault.
F7	P23	P23		Air-to-water interlock warning, within 30 seconds after the water pump start command, the interlock does not turn ON or the interlock turns OFF during water pump operation (interlock signal by flow switch and/or differential pressure switch, depending on the model)
FA	P26	P26		Outdoor unit fault, Compressor overcurrent - check winding resistance, Inverter failure - check internal resistance term HIC + & - to UVW 200-300Kohm or more
FC	P29	P29		Outdoor unit fault, Inverter circuit fault - Motor-current Detection Circuit (MDC) fault, check comp windings, sensors C1 & TS, if ok possible pcb failure.
FD	P30	P30		Indoor unit fault, System controller detected fault on sub indoor unit
FF	P31	P31		Simultaneous operation multi control fault, Group controller fault
65535 (-1)	N/A	N/A	INMBSPAN001R000	Error in the communication of INMBSPAN001R000 device with the AC unit

In case to detect an error code not listed, contact your closest Panasonic/Sanyo technical support service.

© HMS Industrial Networks S.L.U - All rights reserved
This information is subject to change without notice