Modbus Server

Modbus RTU Master and Modbus TCP slave

USER MANUAL

Issue date: 10/2025 v1.4

ENGLISH

14 rue Edouard Petit
42000 St-Etienne

Tel : +33 477 92 03 56
Email : contact@rg2i.com
www.rg2i.com

Important User Information

Disclaimer

The information in this document is for informational purposes only. Please inform HMS Industrial Networks of any inaccuracies or omissions found in this document. HMS Industrial Networks disclaims any responsibility or liability for any errors that may appear in this document.

HMS Industrial Networks reserves the right to modify its products in line with its policy of continuous product development. The information in this document shall therefore not be construed as a commitment on the part of HMS Industrial Networks and is subject to change without notice. HMS Industrial Networks makes no commitment to update or keep current the information in this document.

The data, examples and illustrations found in this document are included for illustrative purposes and are only intended to help improve understanding of the functionality and handling of the product. In view of the wide range of possible applications of the product, and because of the many variables and requirements associated with any particular implementation, HMS Industrial Networks cannot assume responsibility or liability for actual use based on the data, examples or illustrations included in this document nor for any damages incurred during installation of the product. Those responsible for the use of the product must acquire sufficient knowledge in order to ensure that the product is used correctly in their specific application and that the application meets all performance and safety requirements including any applicable laws, regulations, codes and standards. Further, HMS Industrial Networks will under no circumstances assume liability or responsibility for any problems that may arise as a result from the use of undocumented features or functional side effects found outside the documented scope of the product. The effects caused by any direct or indirect use of such aspects of the product are undefined and may include e.g. compatibility issues and stability issues.

© HMS Industrial Networks S.L.U - All rights reserved
This information is subject to change without notice

Router for the integration of Modbus RTU installations into Modbus TCP enabled monitoring and control systems.

ORDER CODE	LEGACY ORDER CODE
INMBSRTR0320000	IBMBSRTR0320000

© HMS Industrial Networks S.L.U - All rights reserved
This information is subject to change without notice

INDEX

1 Description 5
1.1 Introduction 5
1.2 Functionality 6
1.3 Router capacity 6
2 Connections 7
2.1 Powering the device 8
2.2 Connection to Modbus 8
2.2.1 Modbus TCP 8
2.2.2 Modbus RTU 8
2.3 Connection to the configuration tool 8
3 Accessing the DIP switch and push button 8
3.1 Setting the DIP switch 9
3.2 Push button 9
4 External LED indicators 10
5 Set-up process and troubleshooting 10
5.1 Pre-requisites 10
5.2 Intesis MAPS. Configuration & monitoring tool for Intesis Modbus series 11
5.2.1 Introduction 11
5.2.2 Connection 11
5.2.3 Configuration tab 12
5.2.4 Signals 13
5.2.5 Sending the configuration to Intesis 14
5.2.6 Diagnostic 15
5.3 Set-up procedure 16
6 Technical specifications 17
7 Dimensions 18

© HMS Industrial Networks S.L.U - All rights reserved
This information is subject to change without notice

1 Description

1.1 *Introduction*

This document describes how to route messages between Modbus RTU and Modbus TCP networks using the *Intesis Modbus RTU to Modbus TCP Router*.

The aim of this integration is to make accessible data from devices in a Modbus RTU network to a Modbus TCP network in a transparent way.

Configuration is carried out using the configuration software Intesis™ MAPS.

This document assumes that the user is familiar with Modbus technologies and their technical terms.

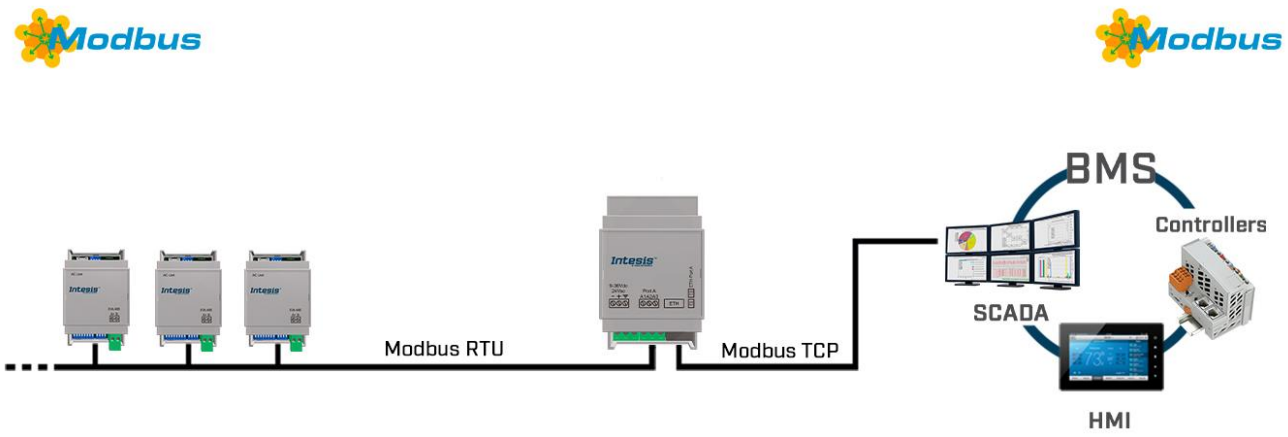

Routing between Modbus RTU and Modbus TCP networks

© HMS Industrial Networks S.L.U - All rights reserved
This information is subject to change without notice

1.2 *Functionality*

After the start up process, Intesis helps route Modbus communications from a Modbus TCP to Modbus RTU networks, allowing Modbus TCP devices to cummunicate with Modbus RTU devices present in another network.

It is not necessary to perfom any mapping as the data from one side is shown on the other side in a transparent way.

The router also has diagnostic signals available trough TCP port 503 to check that all the communication from each side is working properly.

1.3 *Router capacity*

Intesis capacity is listed below:

Element	32 devices	Notes
Type of Modbus slave devices	Modbus RTU (EIA485) Modbus TCP	Those supporting Modbus *protocol*. Communication over TCP/IP and RTU
Number of Modbus slave devices	Up to 32 full-load RTU devices	Number of Modbus slave devices supported by the device

© HMS Industrial Networks S.L.U - All rights reserved
This information is subject to change without notice

2 Connections

Find below information regarding the Intesis connections available.

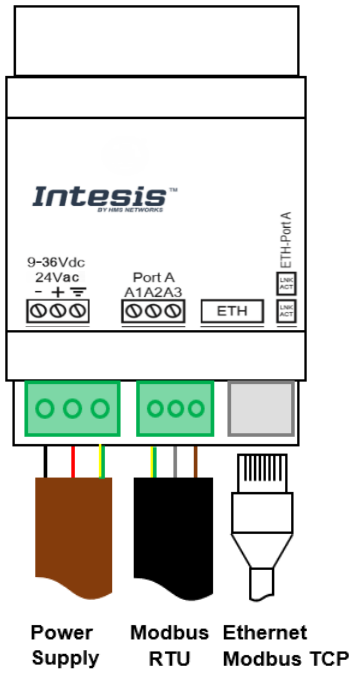

Power Supply
Must use NEC Class 2 or Limited Power Source (LPS) and SELV rated power supply. Respect polarity applied of terminals (+) and (-). Be sure the voltage applied is within the range admitted (check table below). The power supply can be connected to earth but only through the negative terminal, never through the positive terminal.

Ethernet
Connect the cable coming from the IP network to the connector ETH of the gateway. Use an Ethernet CAT5 cable. If communicating through the LAN of the building, contact the network administrator and make sure traffic on the port used is allowed through all the LAN path (check the gateway user manual for more information). With factory settings, after powering up the gateway, DHCP will be enabled for 30 seconds. After that time, if no IP is provided by a DHCP server, the default IP 192.168.100.246 will be set.

Port Modbus RTU
Connect the EIA485 bus to connectors A3 (B+), A2 (A-) and A1 (SNGD) of gateway's Port. Respect the polarity.

Note for EIA485 port; *Remember the characteristics of the standard EIA485 bus: maximum distance of 1200 meters, maximum 32 devices connected to the bus, and in each end of the bus it must be a termination resistor of 120 Ω.*

Ensure proper space for all connectors when mounted (see section 6).

© HMS Industrial Networks S.L.U - All rights reserved
This information is subject to change without notice

2.1 *Powering the device*

A power supply working with any of the voltage range allowed is needed (check section **¡Error! No se encuentra el origen de la referencia.**). Once connected the RUN led (Figure above) will turn on.

WARNING! In order to avoid earth loops that can damage the gateway and/or any other equipment connected to it, we strongly recommend:

- The use of DC power supplies, floating or with the negative terminal connected to earth. **Never use a DC power supply with the positive terminal connected to earth**.

2.2 *Connection to Modbus*

2.2.1 Modbus TCP

Connect the communication cable coming from the network hub or switch to the ETH port of Intesis. The cable to be used shall be a straight Ethernet UTP/FTP CAT5 cable.

2.2.2 Modbus RTU

Connect the communication cable coming from the Modbus network to the port marked as Modbus of Intesis. Connect the EIA485 bus to connectors A3 (B+), A2 (A-) and A1 (SGND). Respect the polarity.

Remember the characteristics of the standard EIA485 bus: maximum distance of 1200 meters, maximum 32 devices connected to the bus, and in each end of the bus it must be a termination resistor of 120 Ω.

2.3 *Connection to the configuration tool*

This action allows the user to have access to configuration and monitoring of the device (more information can be found in the configuration tool User Manual). One method to connect to the PC can be used:

- **Ethernet:** Using the Ethernet port of Intesis.

3 Accessing the DIP switch and push button

To access the gateway's DIP switch block and push button, you must remove the gateway's main front cover. Use a small flathead screwdriver or a similar tool to proceed.

IMPORTANT! Proceed with caution to avoid damaging the gateway's PCB or housing.

After setting the switches or using the push button, close the housing again, ensuring the front cover is securely fixed in its position.

© HMS Industrial Networks S.L.U - All rights reserved
This information is subject to change without notice

3.1 *Setting the DIP switch*

The gateway has a DIP switch block dedicated to the EIA-485 port. The function of the DIP switch is to activate or deactivate the polarization (positions 1 and 2) and the termination resistor (position 3) of the port:

Binary value	Switches			Description
b0 .. b2	1	2	3	
0 0 X	OFF	OFF	X	No bus polarization (default value)
1 1 X	ON	ON	X	Bus polarization active
X X 0	X	X	OFF	120 Ω termination resistor inactive (default value) The gateway is not at one end of the EIA-485 bus
X X 1	X	X	ON	120 Ω termination resistor active. The gateway is at one end of the EIA-485 bus

IMPORTANT! The DIP switch configuration will only take effect after rebooting the gateway. To reboot the gateway, disconnect it from power and connect it again.

3.2 *Push button*

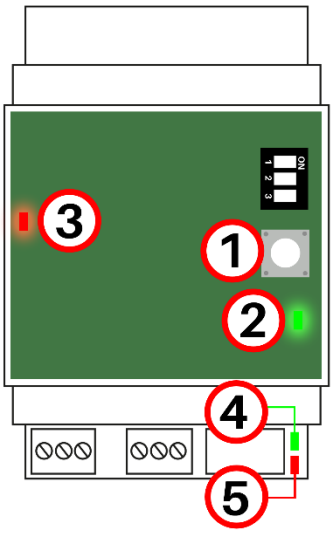

Use the push button (1) to reset the gateway to the factory settings:

1. Disconnect the gateway from power.
2. Press and hold the button.
3. Connect the gateway to power.

- The feedback LED (3) turns on solid red.
- The button LED (2) turns on solid green.
- The external LEDs (4) and (5) start a sequence, turning on and off alternately.

4. After 10 seconds, release the button.

- All LEDs keep performing as described in step 3. Then, they turn off, blink once, and behave as in normal operation: External LEDs (4) and (5) are off, the feedback LED (3) blinks green, and the button LED (2) is solid green.

© HMS Industrial Networks S.L.U - All rights reserved
This information is subject to change without notice

4 External LED indicators

The gateway's LEDs are placed next to the Ethernet port:

LED 1 (green)

LED 2 (red)

Besides, the Ethernet connector has its own LEDs:

LED 3 (orange)

LED 4 (green)

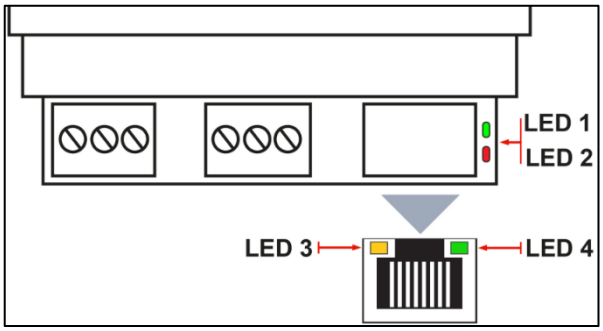

LED	Color	Description
LED 1 (Port A)	Green	**Blinking**: Receiving Modbus RTU packets
LED 2 (Ethernet)	Red	**Blinking**: Receiving Modbus TCP packets
LED 3 (RJ45 – Speed)	Orange	**ON**: Connection to a switch, a hub, or a PC at 100 Mbps link speed. **OFF**: Connection not established, or established at 10 Mbps link speed.
LED 4 (RJ45 – Link/Activity)	Green	**ON**: Ethernet connection established **Blinking**: Ethernet activity **OFF**: No Ethernet connection established

5 Set-up process and troubleshooting

5.1 *Pre-requisites*

It is necessary to have a Modbus TCP client device operative and well connected to the corresponding Modbus port of Intesis and a Modbus RTU slave connected to its corresponding port as well.

Connectors, connection cables, PC to use the configuration tool and other auxiliary material, if needed, are not supplied by HMS Industrial Networks S.L.U for this standard integration.

Items supplied by HMS Networks for this integration are:

- Intesis gateway.
- Link to download the configuration tool.
- Product documentation.

© HMS Industrial Networks S.L.U - All rights reserved
This information is subject to change without notice

5.2 *Intesis MAPS. Configuration & monitoring tool for Intesis Modbus series*

5.2.1 Introduction

Intesis MAPS is a Windows® compatible software developed specifically to monitor and configure Intesis Modbus series.

The installation procedure and main functions are explained in the *Intesis MAPS User Manual*. This document can be downloaded from the link indicated in the installation sheet supplied with the Intesis device or in the product website at www.intesis.com

In this section, only the specific case of Modbus Router systems will be covered.

Please check the Intesis MAPS user manual for specific information about the different parameters and how to configure them.

5.2.2 Connection

To configure the Intesis connection parameters press on the ***Connection*** button in the *menu bar*.

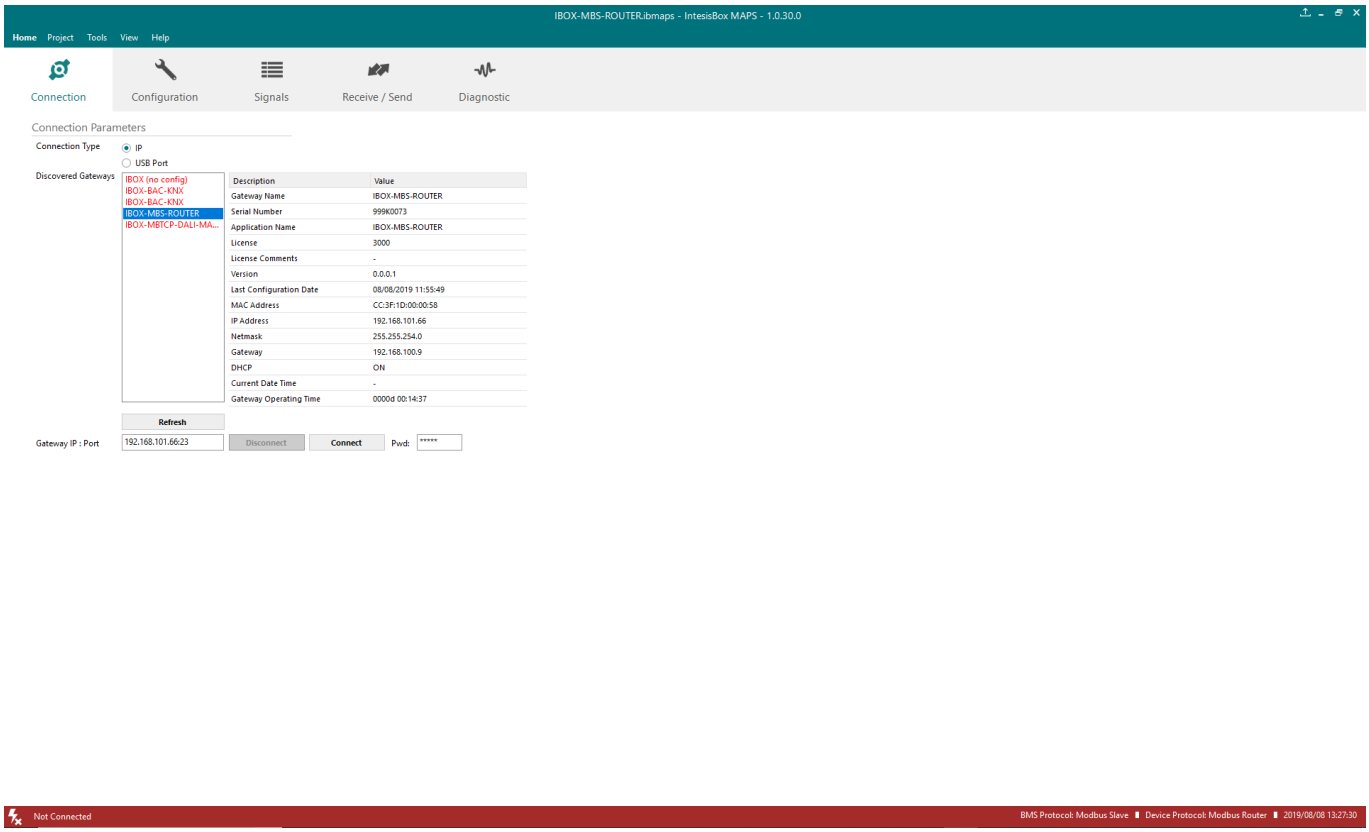

Figure 5.1 MAPS connection

© HMS Industrial Networks S.L.U - All rights reserved
This information is subject to change without notice

5.2.3 Configuration tab

Select the ***Configuration*** tab to configure the connection parameters. Three subsets of information are shown in this window: General (Gateway general parameters), Modbus slave (Modbus TCP slave interface configuration) and Modbus Router (Modbus TCP & RTU interfaces parameters).

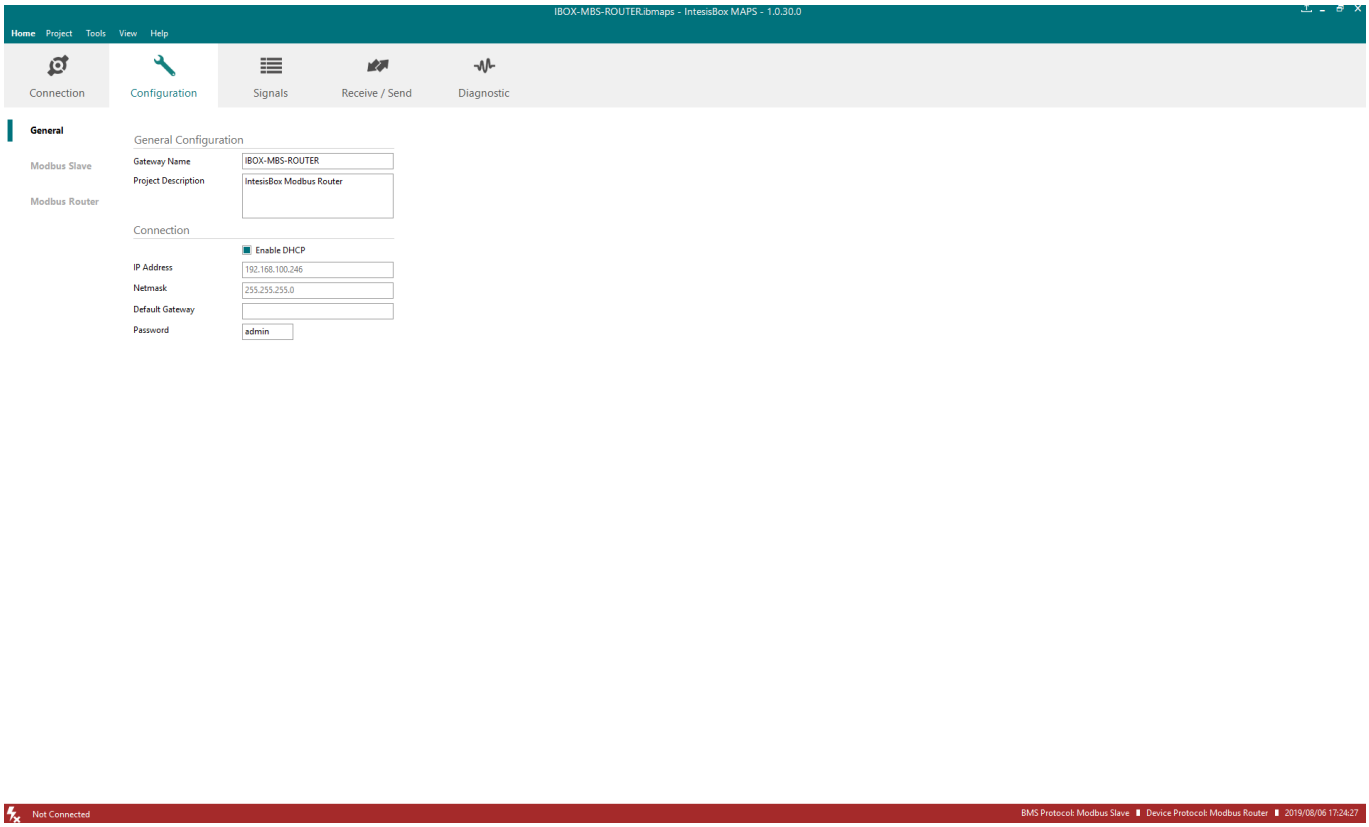

Figure 5.2 Intesis MAPS configuration tab

© HMS Industrial Networks S.L.U - All rights reserved
This information is subject to change without notice

5.2.4 Signals

All available signals, its corresponding Modbus register and other main parmaters are listed in the signals tab. More information on each parameter and how to configure it can be found in the Intesis MAPS user manual.

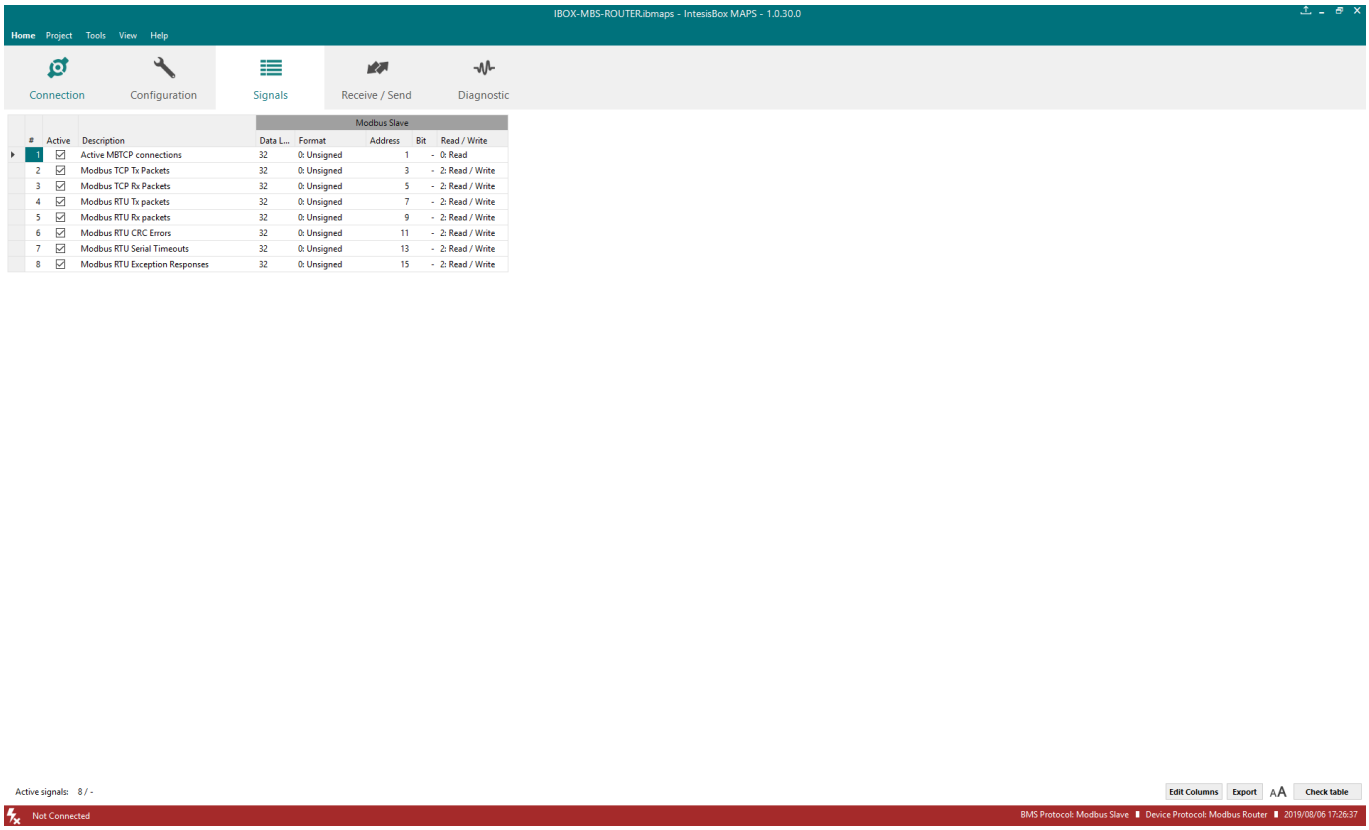

Figure 5.3 Intesis MAPS Signals tab

© HMS Industrial Networks S.L.U - All rights reserved
This information is subject to change without notice

5.2.5 Sending the configuration to Intesis

When the configuration is finished, follow the next steps.

1.- Click on ***Save*** button to save the project to the project folder on your hard disk (more information in Intesis MAPS User Manual).

2.- You will be prompted to generate the configuration file to be sent to the gateway.

a.- If ***Yes*** is selected, the file containing the configuration for the gateway will be generated and saved also into the project folder.

b.- If ***NO*** is selected, remember that the binary file with the project needs to be generated before the Intesis starts to work as expected.

3.- Press the ***Send File*** button to send the binary file to the Intesis device. The process of file transmission can be monitored in the Intesis Communication Console window. Intesis will reboot automatically once the new configuration is loaded.

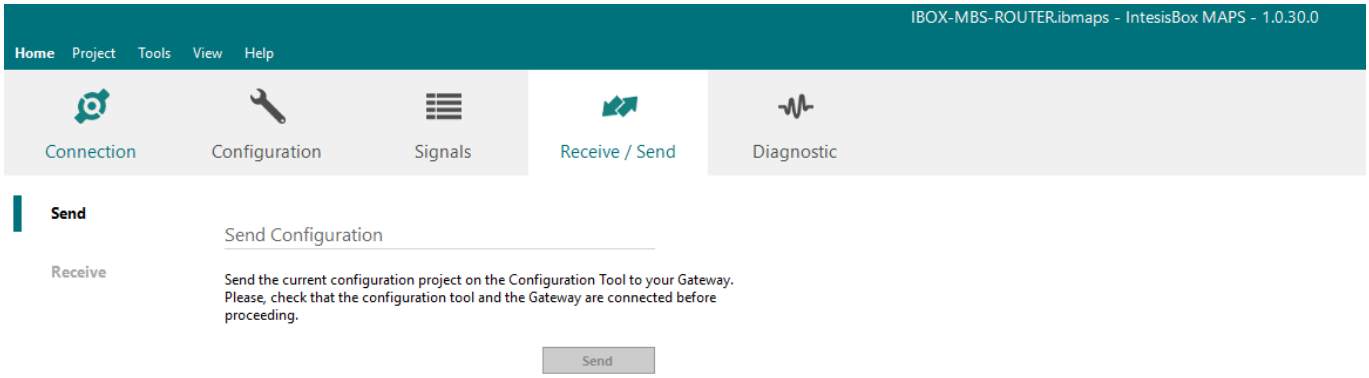

Figure 5.4 Intesis MAPS Receive/Send tab

After any configuration change, do not forget to send the configuration file to the Intesis using button Send File.

© HMS Industrial Networks S.L.U - All rights reserved
This information is subject to change without notice

5.2.6 Diagnostic

To help integrators in the commissioning tasks and troubleshooting, the Configuration Tool offers some specific tools and viewers.

In order to start using the diagnostic tools, connection with the Gateway is required.

The Diagnostic section is composed by two main parts: Tools and Viewers.

- **Tools**
  Use the tools section to check the current hardware status of the box, log communications into compressed files to be sent to the support, change the Diagnostic panels' view or send commands to the gateway.

- **Viewers**
  In order to check the current status, viewer for the Internal and External protocols are available. It is also available a generic Console viewer for general information about communications and the gateway status and finally a Signals Viewer to simulate the BMS behavior or to check the current values in the system.

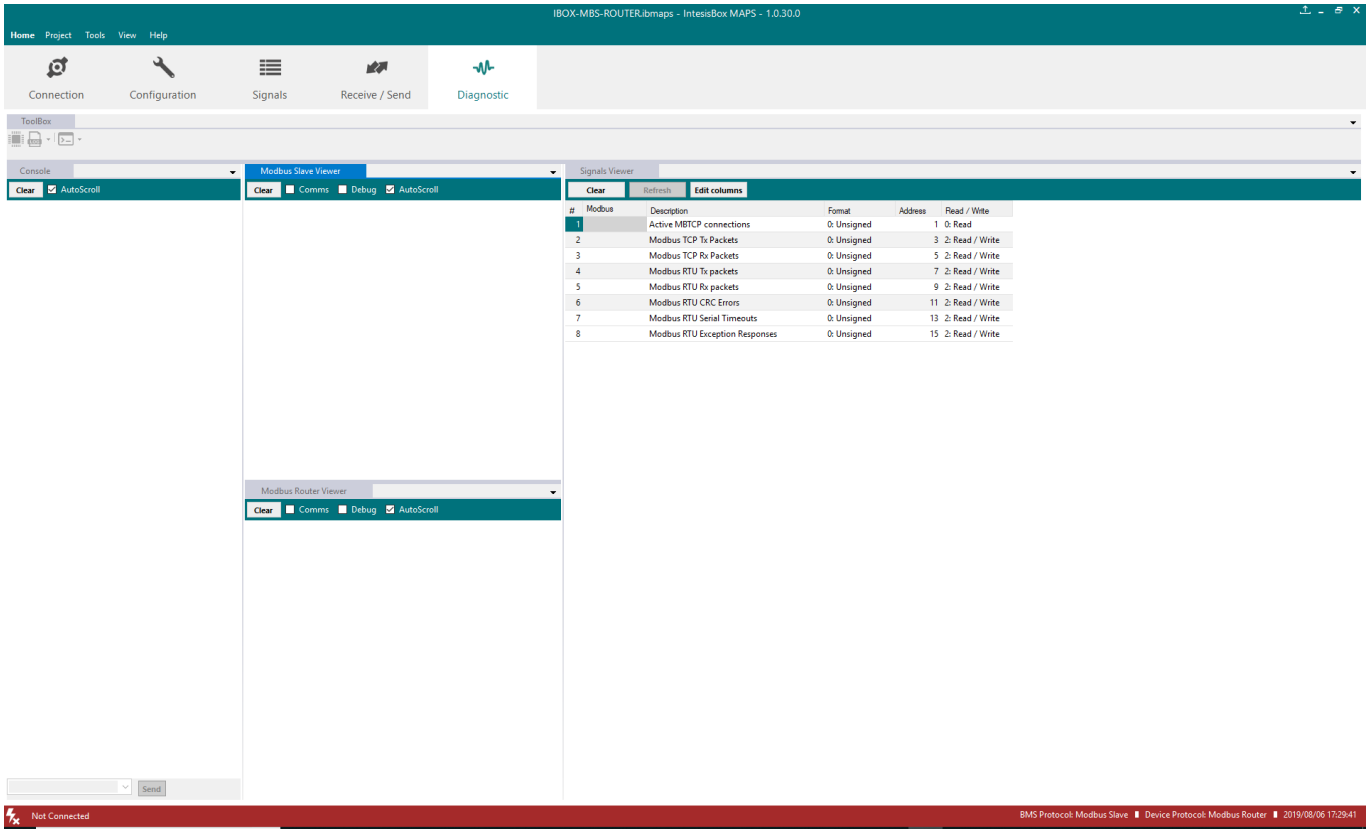

Figure 5.5 Diagnostic

More information about the Diagnostic section can be found in the Configuraion Tool manual.

© HMS Industrial Networks S.L.U - All rights reserved
This information is subject to change without notice

5.3 *Set-up procedure*

1. Install Intesis MAPS on your laptop, use the setup program supplied for this and follow the instructions given by the Installation wizard.

2. Install Intesis in the desired installation site. Installation can be on DIN rail or on a stable not vibrating surface (DIN rail mounted inside a metallic industrial cabinet connected to ground is recommended).

3. Connect the communication cable coming from the Modbus TCP network to the port marked as Ethernet on Intesis (More details in section 2).

4. Connect the communication cable coming from the EIA485 port of the Modbus RTU installation to the port marked as Modbus RTU of Intesis (More details in section 2).

5. Power up Intesis. The supply voltage can be 9 to 30 Vdc. Take care of the polarity of the supply voltage applied.

   WARNING! In order to avoid earth loops that can damage Intesis and/or any other equipment connected to it, we strongly recommend:

   - The use of DC power supplies, floating or with the negative terminal connected to earth. **Never use a DC power supply with the positive terminal connected to earth**.

6. If you want to connect using IP, connect the Ethernet cable from the laptop PC to the port marked as ETH of Intesis (More details in section 2).

7. Open Intesis MAPS, create a new project selecting a copy of the one named **INMBSRTR0320000**.

8. Modify the configuration as desired, save it and download the configuration file to Intesis as explained in the Intesis MAPS user manual.

9. Visit the Diagnostic section and check that there is communication activity, some TX frames and some other RX frames. This means that the communication with the Modbus TCP Client device/s and Modbus RTU slave devices is OK. In case there is no communication activity between Intesis and the Modbus devices, check that those are operative: check the baud rate, the communication cable used to connect all devices and any other communication parameter.

© HMS Industrial Networks S.L.U - All rights reserved
This information is subject to change without notice

6 Technical specifications

Housing	Plastic, type PC (UL 94 V-0) Net dimensions (dxwxh): 93x53x58 mm Color: Light Grey. RAL 7035 Protection: IP20
Mounting	Wall DIN rail (recommended) EN60715 TH35
Terminal wiring	Per terminal: solid wires or stranded wires (twisted or with ferrule) • One core: 0.2mm^2 .. 2.5mm^2 (24 ..11 AWG) • Two cores: 0.2mm^2 .. 1.5mm^2 (24 ..15 AWG) • Three cores: Not permitted For distances longer than 3.05 meters (10 feet), use Class 2 cables.
Power	1 x Plug-in screw terminal block (3 poles) 9-36 VDC / 24 VAC / 50-60 Hz / 0.140 A / 1.7 W
Ethernet	1 x Ethernet 10/100 Mbps RJ45
Port A	1 x Serial EIA485 (Plug-in screw terminal block 3 poles) • A1: SGND (reference ground or shield) • A2: B (negative) • A3: A (positive)
DIP switch	EIA-485 port polarization and termination: Positions 1 and 2: • On: Polarization active • Off: Polarization inactive (default) Position 3: • On: 120 Ω termination active • Off: 120 Ω termination inactive (default)
Push button	1 x Factory reset
LED indicators	2 x Communication status 2 x Ethernet link/speed
Operational temperature	0°C to +60°C
Operational humidity	5 to 95%, no condensation
Isolation voltage between communication ports	1000 VDC

© HMS Industrial Networks S.L.U - All rights reserved
This information is subject to change without notice

7 Dimensions

NET DIMENSIONS (HxWxD):

- Millimeters: 93 x 53 x 58 mm
- Inches: 3.7 x 2.1 x 2.3”

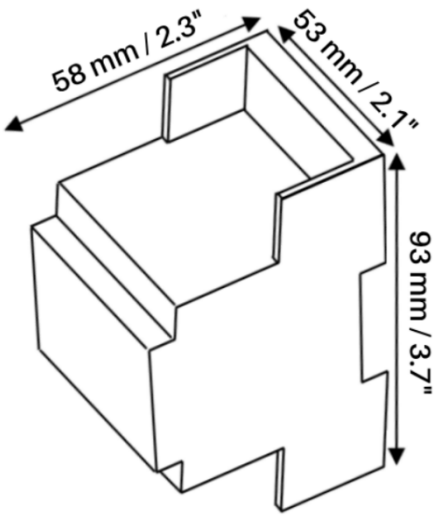

IMPORTANT! Leave enough clear space to wire the gateway easily and for the subsequent manipulation of elements.

© HMS Industrial Networks S.L.U - All rights reserved
This information is subject to change without notice