ENGLISH

IN790NIB100A000 User Manual

NIBE Heat Pumps to BACnet/IP, BACnet MS/TP, and KNX TP

USER MANUAL
Version 1.0.1
Publication date 2026-02-17

14 rue Edouard Petit
42000 St-Etienne
Tel : +33 477 92 03 56
Email : contact@rg2i.com
www.rg2i.com

Copyright © 2026 Intesis

Disclaimer

The information in this document is for informational purposes only. Please inform HMS Networks of any inaccuracies or omissions found in this document. HMS Networks disclaims any responsibility or liability for any errors that may appear in this document.

HMS Networks reserves the right to modify its products in line with its policy of continuous product development. The information in this document shall therefore not be construed as a commitment on the part of HMS Networks and is subject to change without notice. HMS Networks makes no commitment to update or keep current the information in this document.

The data, examples and illustrations found in this document are included for illustrative purposes and are only intended to help improve understanding of the functionality and handling of the product. In view of the wide range of possible applications of the product, and because of the many variables and requirements associated with any particular implementation, HMS Networks cannot assume responsibility or liability for actual use based on the data, examples or illustrations included in this document nor for any damages incurred during installation of the product. Those responsible for the use of the product must acquire sufficient knowledge in order to ensure that the product is used correctly in their specific application and that the application meets all performance and safety requirements including any applicable laws, regulations, codes and standards. Further, HMS Networks will under no circumstances assume liability or responsibility for any problems that may arise as a result from the use of undocumented features or functional side effects found outside the documented scope of the product. The effects caused by any direct or indirect use of such aspects of the product are undefined and may include e.g. compatibility issues and stability issues.

Table of Contents

1. Description, Compatible NIBE models, and Order Codes 1

2. General Information 2

2.1. Intended Use of the User Manual 2
2.2. General Safety Information 2
2.3. Admonition Messages and Symbols 3

3. Overview 4

3.1. Inside the Package 5
3.2. Main Features 5
3.3. General Functionality 6

4. Hardware 7

4.1. Mounting 7
4.2. Connection 8
4.2.1. Gateway Connectors 8
4.2.2. Connection to the Power Supply 10
4.2.3. Connection to NIBE 11
4.2.4. Connection to KNX 11
4.2.5. Connection to BACnet 11
4.2.6. Connection to a Computer for Configuration 12
4.2.6.1. Connecting the Gateway to the Computer through Ethernet 12
4.2.6.1.1. Connection Through a DHCP Server 13
4.2.6.1.2. Connection Without a DHCP Server 14
4.3. NIBE LED Indicators 16
4.4. DIP Switches 17
4.5. Buttons 17
4.6. Technical Specifications 21
4.7. Dimensions 22

5. Factory Reset 23

6. Integration into BACnet 24

6.1. BACnet Templates 24
6.1.1. BACnet Template for S1156, S1256, S1155, and S1255 25
6.1.2. BACnet Template for S2125 and F2120 (Slave 1) 29
6.1.3. BACnet Template for S2125 and F2120 (Slave 2) 33
6.1.4. BACnet Template for F2040 and F2050 34
6.1.5. BACnet Template for VVM/SVM + S2125, F2120, F2040, or F2050 38
6.1.6. BACnet Template for S735 43

7. Integration into KNX Systems 47

7.1. NIBE KNX Templates 47
7.1.1. KNX Template for S1156, S1256, S1155, and S1255 48
7.1.2. KNX Template for S2125 and F2120 (Slave 1) 52
7.1.3. KNX Template for S2125 and F2120 (Slave 2) 56
7.1.4. KNX Template for F2040 and F2050 57
7.1.5. KNX Template for VVM/SVM + S2125, F2120, F2040, and F2050 61
7.1.6. KNX Template for S735 66

8. Configuration: Change the Gateway's Protocol 70

1. Description, Compatible NIBE models, and Order Codes

IN790NIB100A000 gateway.

KNX and BACnet gateway for NIBE heat pump systems.

You can set up this Intesis gateway for the following communication protocols:

- KNX TP
- BACnet/IP
- BACnet MS/TP

Use the compatibility tool to get a complete list of compatible units: https://compatibility.intesis.com/

ORDER CODE	LEGACY ORDER CODE
IN790NIB100A000	-

2. General Information

2.1. Intended Use of the User Manual

This manual contains the main features of this Intesis gateway and the instructions for its appropriate installation, configuration, and operation.

Any person who installs, configures, or operates this gateway or any associated equipment should be aware of this manual's contents.

Keep this manual for future reference during the installation, configuration, and operation.

2.2. General Safety Information

IMPORTANT
Follow these instructions carefully. Improper work may seriously harm your health and damage the gateway and/or any other equipment connected to it.

Only technical personnel, following these instructions and the country legislation for installing electrical equipment, can install and manipulate this gateway.

Install this gateway indoors, in a restricted access location, avoiding exposure to direct solar radiation, water, high relative humidity, or dust.

Preferably, mount this gateway on a DIN rail inside a grounded metallic cabinet, following the instructions in this manual.

Connect this gateway only to networks without routing to the outside plant.

All communication ports are considered for indoor use and must only be connected to SELV circuits.

Disconnect all systems from power before manipulating and connecting them to the gateway.

Use a SELV-rated NEC class 2 or limited power source (LPS) power supply.

MANDATORY GROUND CONNECTION

YOU MUST connect the gateway to the installation ground terminal. Always use the gateway's dedicated connector ⏚

NEVER use the positive or negative gateway's connectors to establish this connection. Not following this indication can cause ground loops and damage the gateway and/or any other equipment connected to it.

If the power supply includes a ground connection, that terminal must be connected to ground.

CAUTION
To avoid earth loops that can damage the gateway and/or any other equipment connected to it, we strongly recommend:

- The use of DC power supplies, floating or with the negative terminal connected to earth. **Never use a DC power supply with a positive terminal connected to earth**.
- The use of AC power supplies only if they are floating and not powering any other device.

Use a circuit breaker between the gateway and the power supply. Rating: 250 V, 6 A.

Supply the correct voltage to power the gateway. The admitted range is detailed in the technical specifications table.

Respect the expected polarity of power and communication cables when connecting them to the gateway.

CAUTION
Only an authorized installer can replace the battery. If the battery is replaced with an incorrect type, there is a risk of explosion. Dispose of used batteries according to local legislation.

Take the necessary antistatic precautions before manipulating the gateway to avoid electrostatic discharges.

These safety instructions in other languages can be found here.

2.3. Admonition Messages and Symbols

CAUTION
Instruction that must be followed to avoid a potentially hazardous situation that, if not avoided, could result in minor or moderate injury.

IMPORTANT
Instruction that must be followed to avoid a risk of reduced functionality and/or damage to the equipment or to avoid a network security risk.

NOTE
Additional information which may facilitate installation and/or operation.

TIP
Helpful advice and suggestions.

NOTICE
Remarkable Information.

3. Overview

NOTE
You can configure this gateway for KNX, BACnet/IP, or BACnet MS/TP using the Intesis MAPS configuration tool. The configuration process is widely explained in the IN790NIB100A000 Configuration Guide.

Figure 1. Integration of NIBE heat pumps into KNX TP control systems

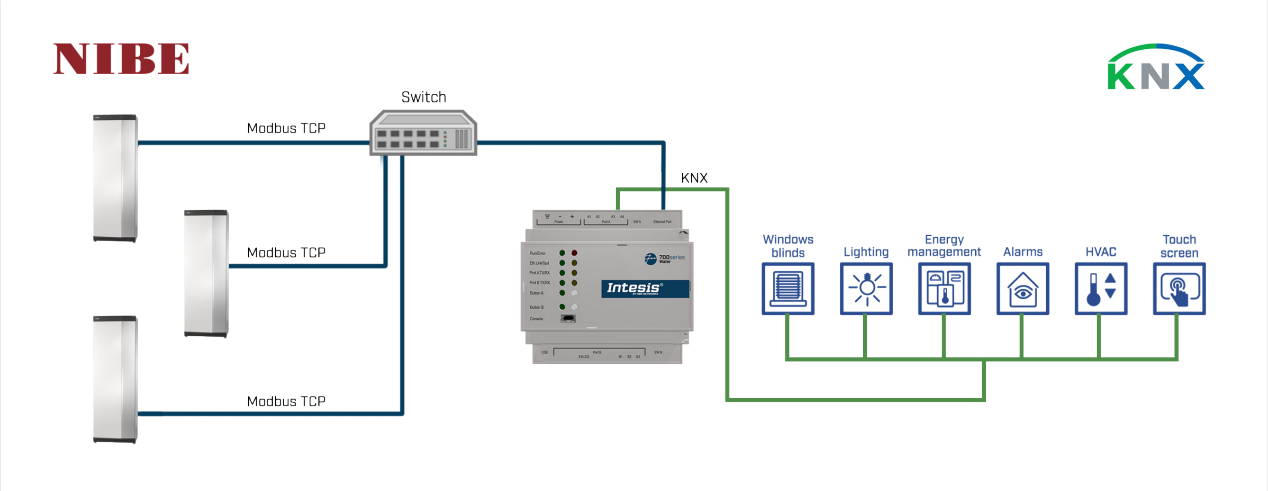

Figure 2. Integration of NIBE heat pumps into BACnet/IP or BACnet MS/TP control systems

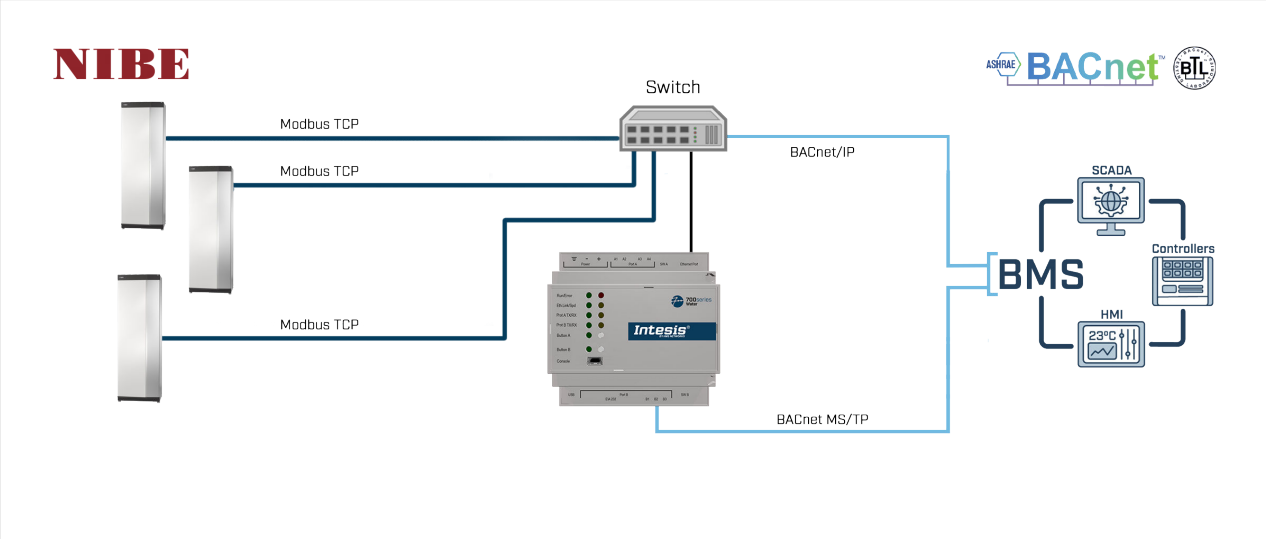

NOTE
This document assumes the user is familiar with KNX, BACnet, and NIBE technologies, including their associated technical terminology.

3.1. Inside the Package

ITEMS INCLUDED

- Intesis IN790NIB100A000 gateway
- USB Mini-B type to USB Type-A cable
- Installation Guide

3.2. Main Features

- UL listed
- BTL certified
- Two applications available:
  - NIBE to KNX TP
  - NIBE to BACnet/IP or BACnet MS/TP
- Capacity for up to five NIBE units and 100 communication registers
- Compatible with ground- and air-source NIBE systems
- Connection to the NIBE unit through Modbus TCP via Ethernet
- Specific signals for NIBE accessories, including pool heating, 4-pipe cooling, integration of photovoltaic installations, multiple climate systems, and more
- Six preconfigured templates ready to be imported into your project
- Integration of different NIBE models into the same project, even combining ground-source and air-source units
- Five extra registers for specific customization
- EIA-485 bus termination and polarization enablement through a dedicated DIP switch block for BACnet MS/TP
- 10 LEDs indicate the operating status of the gateway and the communication ports
- Multiple ports for serial and IP communication:
  - Green pluggable terminal block for BACnet MS/TP (EIA-485 port)
  - Orange pluggable terminal block for KNX
  - Ethernet port for the NIBE system (communication over Modbus TCP) and for BACnet/IP
  - USB Mini-B type 2.0 port for connection to the computer
- Every signal supports arithmetic and logical operations, such as multiplication, division, equality checks, and comparisons (e.g., greater than), ensuring perfect adaptation between the NIBE and BMS signals.
- USB Type A 2.0 connector for connecting a flash drive to save logs and import or export MAPS projects.
- BACnet advanced features available (trend logs, calendars, etc.).

3.3. General Functionality

With this Intesis gateway, you can easily integrate NIBE systems into a control system based on KNX TP, BACnet/IP, or BACnet MS/TP. To do so, the gateway acts as a server device of the installation itself, accessing the NIBE signals.

The gateway is continuously polling the NIBE system, storing in its memory the current status of signals and serving this data to the control system when requested. The gateway also sends the requested commands from the control system to the NIBE unit.

A wide range of signals can be controlled and monitored, including those for the accessories connected to the NIBE system, such as pool heating, 4-pipe cooling, photovoltaic installations, multiple climate systems, and more.

The gateway is configured using Intesis MAPS, the configuration tool for Intesis gateways. Importing preconfigured templates enables a fast and easy configuration process.

4. Hardware

4.1. Mounting

IMPORTANT
Before mounting, please ensure that the chosen installation place preserves the gateway from direct solar radiation, water, high relative humidity, or dust.

IMPORTANT
Ensure the gateway has sufficient clearances for all connections when mounted.

NOTE
Mount the gateway over a DIN rail, preferably inside a grounded metallic industrial cabinet.

1. Fit the gateway's top-side clips in the upper edge of the DIN rail.
2. Press the low side of the gateway gently to lock it in the DIN rail.
3. Make sure the gateway is firmly fixed.

NOTE
For some DIN rails, to complete step 2, you may need a small screwdriver or similar to pull the bottom clip down.

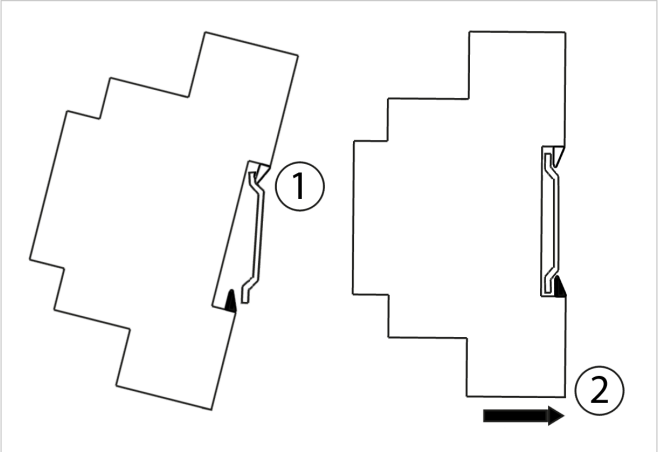

4.2. Connection

CAUTION
Disconnect all systems from power before manipulating and connecting them to the gateway.

IMPORTANT
Keep communication cables away from power and ground wires.

NOTE
Mount the gateway in the desired place before wiring it.

4.2.1. Gateway Connectors

Figure 3. Wiring diagram

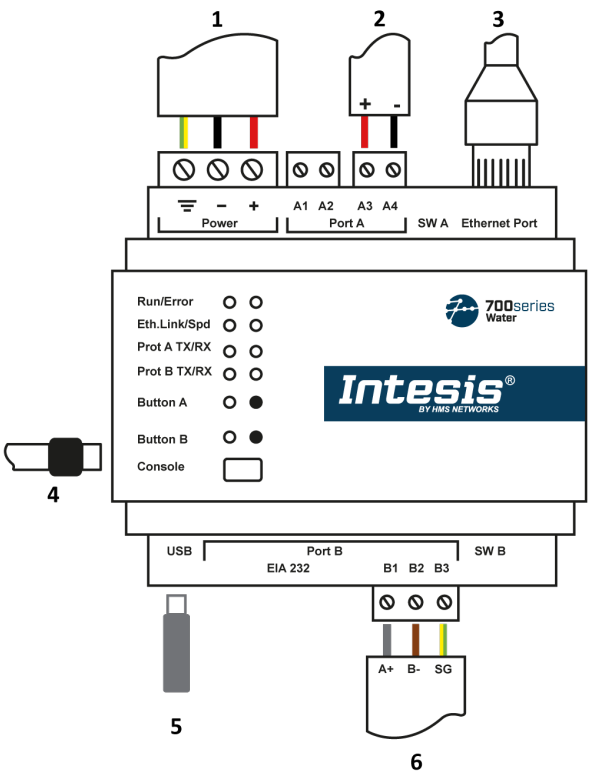

1. Power Supply (9-36 VDC / 24 VAC)
2. KNX
3. Ethernet
NIBE (Modbus TCP), BACnet/IP & Console
4. Console Port
USB Mini-B type
5. USB storage
6. BACnet MS/TP

WIRING THE CONNECTORS

IMPORTANT
For all connectors, use solid or stranded wires (twisted or with ferrule).

Cross-section/gauge per terminal:

- One core: 0.2 .. 2.5 mm^2 / 24 .. 11 AWG
- Two cores: 0.2 .. 1.5 mm^2 / 24 .. 15 AWG
- Three cores: Not permitted

NOTE
To know more about each port's specifications, see Technical Specifications (page 21).

TIP
Terminal block connectors can be unplugged to facilitate the wiring process.

COMMUNICATION PORTS

PORT	USED FOR	POLARITY/+INFO			
Port A	KNX TP bus	A1: NA	A2: NA	**A3: +**	**A4: -**
Ethernet [1]	**As a TCP/IP port**: BACnet/IP and NIBE system (Modbus TCP) **As a console port**: Connection to a computer to configure the gateway	Use a CAT5 or higher Ethernet cable			
Port B EIA-485 [2]	BACnet MS/TP	**B1**: A+	**B2**: B-	**B3**: SG	
Port B EIA-232	NA				
Console	Connection to a computer to configure the gateway	USB Mini-B type			
USB	USB Type A 2.0 connector for saving logs into a USB flash drive. HDD devices are not supported.				

IMPORTANT
[1] **Ethernet connection considerations:**

- When using the building LAN, contact the network administrator and make sure traffic is allowed.
- The gateway features a temporary DHCP mode that is enabled for 30 seconds when an Ethernet link is detected, provided the gateway still has its factory settings or has been factory reset. During this time, if the gateway is connected to a DHCP-enabled network, the server will assign it a dynamic IP address. If no DHCP server is available, the default IP address **192.168.100.246** will be automatically assigned after 30 seconds.

NOTICE
[2] **EIA-485 bus requirements**:

- Maximum length of 1200 m (4000 ft).
- Up to 32 devices connected.
- A 120 Ω resistor is needed at each end of the bus. You can enable the gateway's built-in termination resistor by setting DIP switch SW B-position1 to ON.
  To know more about the EIA-485 bus, refer to the document Polarity Issues in RS485 Networks.

4.2.2. Connection to the Power Supply

The power supply connector is a green pluggable terminal block (three poles) labeled as **Power**.

Apply the voltage within the admitted range and of enough power:

- **For DC**: 9 .. 36 VDC, 1.7 W
- **For AC**: 24 VAC ±10 %, 50-60 Hz, 1.7 W

NOTE
Recommended voltage: 24 VDC, 1.7 W

IMPORTANT
Use a circuit breaker between the gateway and the power supply. Rating: 250 V, 6 A.

IMPORTANT

- Use SELV-rated NEC class 2 or limited power source (LPS) power supply.
- Respect the polarity.
- Connect the gateway's ground terminal ⏚ to the installation grounding.

IMPORTANT
To avoid earth loops that can damage the gateway and/or any other equipment connected to it, we strongly recommend:

- The use of DC power supplies, floating or with the negative terminal connected to earth.
- The use of AC power supplies only if they are floating and not powering any other device.

CAUTION
Never use a DC power supply with a positive terminal connected to earth.

4.2.3. Connection to NIBE

Connect the gateway and the NIBE system through their Ethernet ports.

NOTICE

- The gateway's **Ethernet port** is located in the top-right corner.
- Refer to the NIBE system documentation to identify the location of its Ethernet port.

IMPORTANT
Use an Ethernet CAT5 or higher cable.

4.2.4. Connection to KNX

Connect the KNX TP communication cable to the gateway's **Port A**.

IMPORTANT
Observe polarity.

- **A3**: +
- **A4**: -

4.2.5. Connection to BACnet

FOR BACNET/IP

Connect the BACnet/IP Ethernet cable to the gateway's **Ethernet Port**.

NOTE
The gateway features a temporary DHCP mode that is enabled for 30 seconds when an Ethernet link is detected, provided the gateway still has its factory settings or has been factory reset. During this time, if the gateway is connected to a DHCP-enabled network, the server will assign it a dynamic IP address. If no DHCP server is available, the default IP address **192.168.100.246** will be automatically assigned after 30 seconds.

IMPORTANT
If communicating through the LAN of the building, contact the network administrator and make sure traffic on the used port is allowed through all LAN paths.

FOR BACNET MS/TP

Connect the BACnet MS/TP communication cable to the gateway's EIA-485 connector of **Port B**.

The connector for the EIA-485 bus is a green pluggable terminal block labeled **B1**, **B2**, and **B3**.

- **B1**: A+
- **B2**: B-
- **SG**: Signal ground

IMPORTANT
Observe the standard restrictions of the EIA-485 bus:

- Maximum distance of 1200 meters (0.75 miles).
- Maximum of 32 devices connected to the bus.
- A 120 ohms (Ω) termination resistor is needed at each end of the bus. The gateway has an internal bus biasing circuit incorporating the termination resistor. It can be enabled using the DIP switch block (**SW B**) dedicated to the **EIA-485** port:
  Position 1
  - ON: 120 Ω termination active.
  - OFF: 120 Ω termination inactive.

  Positions 2 and 3
  - ON: Polarization active.
  - OFF: Polarization inactive.

  For further details, see DIP Switches (page 17).

To know more, refer to the document Polarity Issues in RS485 Networks.

IMPORTANT
When installing the gateway at the end of the bus with the termination resistor enabled, do not install an additional termination resistor at that end.

4.2.6. Connection to a Computer for Configuration

Use the supplied USB Mini-B type to USB Type-A cable to connect the gateway through its **USB** port to a computer to configure it with Intesis MAPS.

NOTE
The connection through the USB port is recommended. However, you can use the **Ethernet Port** to connect the gateway and the computer instead. When using this type of connection, some indications must be considered. To know more, read the following section Connecting the Gateway to the Computer through Ethernet (page 12).

4.2.6.1. Connecting the Gateway to the Computer through Ethernet

When using the Ethernet port to connect the gateway to the computer, certain considerations must be taken into account depending on whether a Dynamic Host Configuration Protocol (DHCP) server is used.

TIP
Using a DHCP server will save you time and effort, as it automatically assigns an IP address within the same range to both the gateway and your computer.

NOTE

The following topics apply whether the gateway still has its factory settings or has been factory reset. In this scenario, the gateway includes a temporary DHCP mode that activates for 30 seconds each time an Ethernet link is detected[1]. If the gateway is connected to a DHCP-enabled network, the server will assign it a dynamic IP address. If no DHCP server is available, the default IP address **192.168.100.246** will be automatically assigned after 30 seconds.

[1] In practice, the temporary DHCP mode activates when:

- The Ethernet cable is unplugged and plugged again.
- The gateway is powered off and on.
- The gateway is reset.

IMPORTANT

If the gateway has already been programmed (i.e., a project has been sent from Intesis MAPS to the gateway), the gateway's DHCP mode will depend on the status of the **Enable DHCP** parameter[2] in the project.

- The parameter is selected (DHCP is enabled): You must connect the gateway through a DHCP-enabled network, as explained in the next section Connection Through a DHCP Server (page 13).
- The parameter is deselected (DHCP is disabled): You must connect the gateway without a DHCP server, as explained in Connection Without a DHCP Server (page 14).

[2] To know more, consult the IN790NIB100A000 Configuration Guide.

4.2.6.1.1. Connection Through a DHCP Server

TIP

The most common topology for this method is connecting both the gateway and the computer to an Ethernet network featuring a DHCP server.

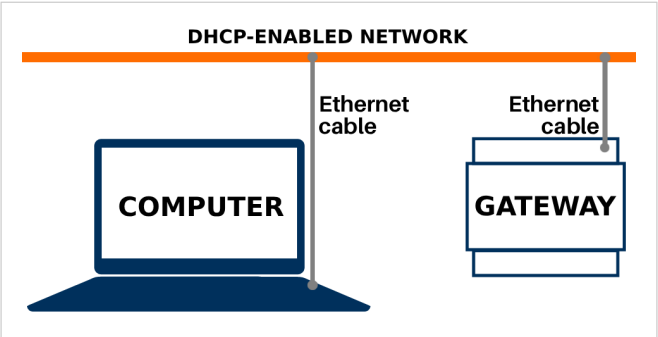

1. Connect the gateway to the DHCP-enabled network that your computer is also connected to.

   IMPORTANT

   Use a straight Ethernet UTP/FTP CAT5 or higher cable.

2. Power on the gateway.

3. Set your computer's Ethernet configuration to **Automatic (DHCP)**. To do so, proceed as follows:
   a. Open the Ethernet settings on your computer.

   > **TIP**
   > These settings can usually be found in the **Network & Internet** menu.

   b. Set the **IP assignment** to **Automatic (DHCP)**.

At this point, you should be able to establish a connection between Intesis MAPS and the gateway by following these steps:

> **NOTICE**
> This is an abstract. Consult the complete procedure in the IN790NIB100A000 Configuration Guide.

1. Open Intesis MAPS.
2. Create a new project.
3. Enter the **Connection** tab.
4. On the **Connection Type** parameter, select IP.
5. Select your gateway from the **Discovered Gateways** field.

   > **TIP**
   > - The gateway appears with the name **Gateway (no config)**.
   > - It may take a few seconds for the gateway to appear. Click the **Refresh** button until it does.
   > - If the template you selected for the project matches the gateway's firmware, all parameters in the **Value** column on the left will populate, except for **Config file name** and **Last Configuration Date**.

6. Click the **Connect** button.

4.2.6.1.2. Connection Without a DHCP Server

> **TIP**
> The most common topology for this method involves connecting the gateway directly to your computer using a single Ethernet cable, provided that the computer does not have a DHCP server.

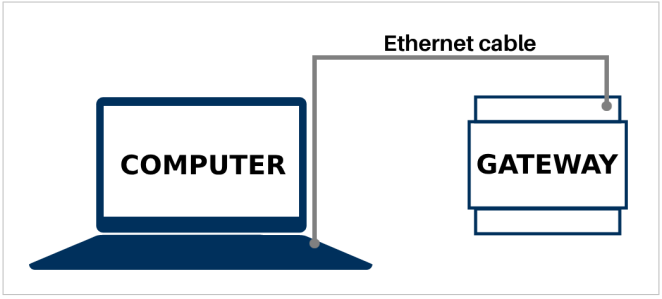

1. Connect the gateway and your computer through their Ethernet ports.

> **IMPORTANT**
> Use a crossover Ethernet UTP/FTP CAT5 or higher cable.

2. Power on the gateway.
3. Open the Ethernet settings on your computer.

> **TIP**
> These settings can usually be found in the **Network & Internet** menu.

4. Set the **IP assignment** to **Manual**.
5. For the IP version, select **IPv4**.
6. Type an IP address within the range of the gateway.

> **NOTICE**
> The gateway's default IP address is **192.168.100.246**

7. In the subnet mask parameter, type **255.255.255.0**, which is the gateway's default netmask.

Figure 4. Example of a computer's Ethernet configuration considering the gateway's default IP address and subnet mask.

At this point, you should be able to establish a connection between Intesis MAPS and the gateway by following these steps:

> **NOTICE**
> This is an abstract. Consult the complete procedure in the IN790NIB100A000 Configuration Guide.

1. Open Intesis MAPS.
2. Create a new project.
3. Enter the **Connection** tab.
4. On the **Connection Type** parameter, select IP.
5. Select your gateway from the **Discovered Gateways** field.

> **TIP**
> - The gateway appears with the name **Gateway (no config)**.
> - It may take a few seconds for the gateway to appear. Click the **Refresh** button until it does.
> - If the template you selected for the project matches the gateway's firmware, all parameters in the **Value** column on the left will populate, except for **Config file name** and **Last Configuration Date**.

6. Click the **Connect** button.

4.3. NIBE LED Indicators

LED	Color	Behavior	Description
Run	Green	Off	No power
		On	The gateway is connected and running
Error	Red	N/A	N/A
		N/A	N/A
Eth. Link	Green	Off (permanent)	No link
		On	Link established
		Off (momentaneous)	Ethernet RX/TX
Eth. Spd	Yellow	Off	10 MB
		On	100 MB
Prot A TX	Green	Off	No activity
		On	See NOTE below[1]
Prot A RX	Yellow	Off	No activity
		On	See NOTE below[1]
Prot B TX	Green	Off	No activity
		On	See NOTE below[1]
Prot B RX	Yellow	Off	No activity
		On	See NOTE below[1]
LED next to Button A For KNX only	Green	Off	Programming mode disabled
		On	Programming mode enabled
LED next to Button B For BACnet only	Green	Off (permanent)	No link to BACnet
		On	For BACnet MS/TP: A master exists, and token exchange is active For BACnet/IP: IP address assigned
		Off (momentaneous)	BACnet TX/RX

NOTE

[1] The meaning of these LEDs' behavior depends on the gateway's current configuration:

- When the gateway is configured for KNX:
  - Prot A TX (green) and RX (yellow) LEDs report the communication with the KNX control system.
  - Prot B TX (green) and RX (yellow) LEDs report the communication with the NIBE unit.
- When the gateway is configured for BACnet:
  - Prot A TX (green) and RX (yellow) LEDs report the communication with the NIBE unit.
  - Prot B TX (green) and RX (yellow) LEDs report the communication with the BACnet control system.

4.4. DIP Switches

- DIP switch A (SW A)
- DIP switch B (SW B)

NOTICE
SW A has no usage for the IN790NIB100A000 gateway.

SW B is dedicated to the EIA-485 connector of Port B, and its function is to activate or deactivate the gateway's built-in termination resistor and the bus polarization:

Position			Description
1	2	3	
OFF	X	X	120 Ω termination inactive (default)
ON	X	X	120 Ω Termination active
X	OFF	OFF	Polarization inactive (default)
X	ON	ON	Polarization active

4.5. Buttons

Two push buttons, labeled as **Button A** and **Button B**, are located on the front panel of the gateway. The function of these buttons depend on whether a USB flash drive is connected to the gateway.

- **No USB flash drive is connected to the gateway.**
  - **Button A**
    The function of Button A depends on the gateway's protocol combination, being subject to the protocol of the BMS:
    - BACnet: Sends an I-Am message.
    - KNX: Enables/disables the programming mode.
  - **Button B**
    Button B alone has no function when no USB flash drive is connected to the gateway.
  - **Button A + Button B**: Resets the gateway to its factory settings as explained in Factory Reset (page 23).
- **A USB flash drive is connected to the gateway.**

NOTICE
- The gateway only supports USB flash drives. External HDD are not supported.
- The gateway supports USB flash drives with FAT32 and exFAT file systems.

NOTE
The function of Button A and Button B can be configured with Intesis MAPS as shown in this picture below:

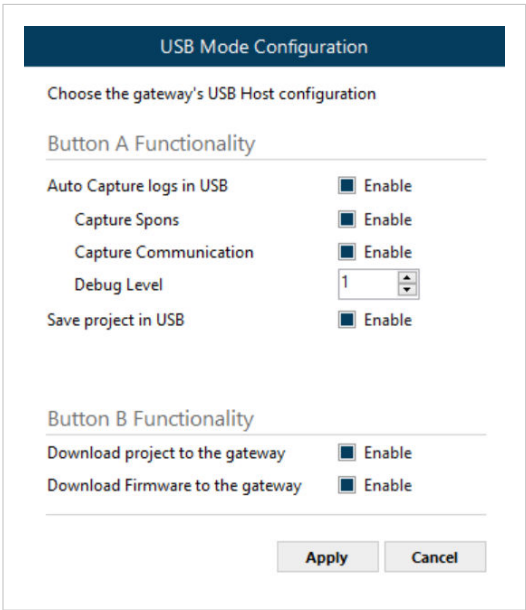

NOTE
When using Button A and Button B functions related to a USB flash drive, we recommend connecting the gateway to a computer running Intesis MAPS to track the process via the Diagnostic tab's Console viewer.

To know more, see the IN790NIB100A000 Configuration Guide.

– **Button A**
By default, it is used to capture logs and save the gateway's configuration on a USB flash drive.
Follow this procedure:

1. Connect the USB flash drive to the gateway through its USB port.

   NOTE
   The Console viewer message "USB: Storage Device Attached" informs that the USB device has been detected.

2. The LEDs next to the buttons start to blink alternatively for 15 seconds.

   NOTICE
   Button A will be active during these 15 seconds. Press it before the LEDs turn off.

   NOTE
   The Console viewer message "USB: [some specific USB device information] mounted" informs that the USB device is ready.

3. Press Button A once to save the current gateway's configuration to the USB flash drive and to start capturing logs.
   The LED of Button A blinks while data is being loaded from the gateway to the USB device.

   NOTE
   The Console viewer message "USB: Project written successfully to USB" informs that the project has been downloaded to the USB device.

   NOTE
   The Console viewer message "USB: Writing logs started" informs that logs are been downloaded to the USB device.

4. Press and hold Button A for five seconds to stop capturing logs.

   NOTE
   The Console viewer message "USB: USB logging canceled by user" informs that logs are been downloaded to the USB device.

5. Disconnect the USB flash drive from the gateway.

   NOTE
   The Console viewer message "USB: Storage Device Detached" informs that the USB device has been disconnected.

– **Button B**
  By default, it is used to upload an Intesis MAPS project and a firmware version from the USB flash drive to the gateway.
  Follow this procedure:

1. Connect the USB flash drive to the gateway through its USB port.

   NOTE
   The Console viewer message "USB: Storage Device Attached" informs that the USB device has been detected.

2. The LEDs next to the buttons start to blink alternatively for 15 seconds.

   NOTICE
   Button B will be active during these 15 seconds. Press it before the LEDs turn off.

   NOTE
   The Console viewer message "USB: [some specific USB device information] mounted" informs that the USB device is ready.

3. Press Button B once to upload the Intesis MAPS project and the firmware version stored on the USB flash drive to the gateway.
   The LED of Button B blinks while data is being loaded from the USB device to the gateway.

   NOTICE
   If more than one project is stored in the USB device, the gateway will upload the last saved project. The project/firmware must be located in the pen drive root memory, not inside a folder.

   NOTE
   The Console viewer message "USB: Saving project from the storage device" informs that the project has been uploaded to the gateway.

   NOTE
   The Console viewer message "FWUPDATE: DONE" informs that the firmware update process has been successful.

4. Disconnect the USB flash drive from the gateway.

   NOTE
   The Console viewer message "USB: Storage Device Detached" informs that the USB device has been disconnected.

4.6. Technical Specifications

Housing	Plastic, type ABS (UL 94 V-0). Color: light grey. RAL 7035. Net dimensions (HxWxD): Millimeters: 90 x 88 x 58 mm / Inches: 3.54 x 3.46 x 2.28" Protection: IP20
Mounting	DIN rail EN60715 TH35
Wiring	Wire cross-section/gauge: • One core: 0.2 .. 2.5 mm^2 / 24 .. 11 AWG • Two cores: 0.2 .. 1.5 mm^2 / 24 .. 15 AWG • Three cores: Not permitted Use solid or stranded wires (twisted or with ferrule).
Power supply	1 x green pluggable terminal block (3 poles). • For DC: 9 to 36 VDC, 1.7 W • For AC: 24 VAC ±10%, 50-60 Hz, 1.7 W Recommended: 24 VDC, 1.7 W
Ethernet	1 x Ethernet RJ45 10/100BASE-T
Port A	1 x green pluggable terminal block (A1 A2): Not used 1 x orange pluggable terminal block (A3+, A4-): KNX TP KNX power consumption: 5 mA. Voltage rating: 29 VDC
SW A	1 x DIP switch: Not used
Port B	1 x serial EIA-232 DB9 male: Not used 1 x serial EIA-485 green pluggable terminal block (B1+, B2-, B3 SG)
SW B	1 x DIP switch (3 positions) for Port B EIA-485 configuration: Position 1: • ON: 120 Ω termination active • OFF: 120 Ω termination inactive (default) Positions 2 and 3: • ON: polarization active • OFF: polarization inactive (default)
Battery	Type: Manganese Dioxide Lithium button battery. Size: 20 x 3.2 mm (0.79" x 0.13"). Capacity 3 V - 255 mA
Console port	USB Mini-B type 2.0 compliant
USB port	USB A type 2.0 compliant. Only for USB flash storage devices (USB pen drive). HDD connection not allowed. Power consumption limited to 150 mA
Push buttons	Button A and Button B: Factory reset
Operational conditions	Temperature: -10… 60°C / 14.. 140°F Humidity: 5 .. 95% (No condensation)
LED indicators	1 x Power / 1 x Error / 2 x Ethernet / 2 x Protocol A / 2 x Protocol B / 1 x Button A / 1 x Button B

4.7. Dimensions

NET DIMENSIONS (HxWxD)
Millimeters: 90 x 88 x 58 mm
Inches: 3.54 x 3.46 x 2.28"

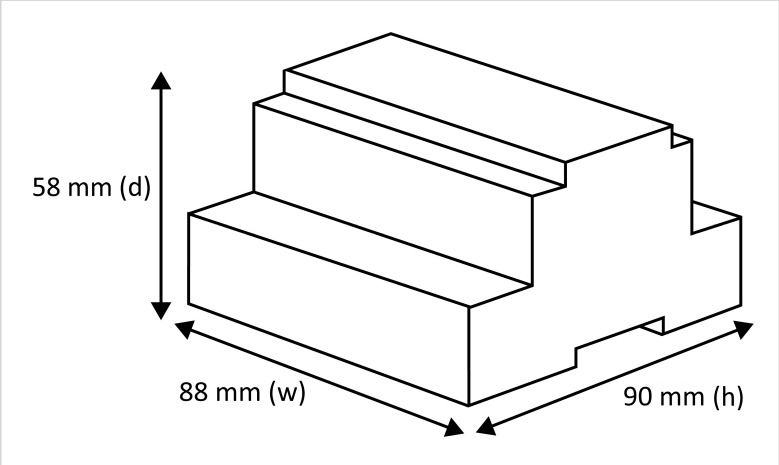

5. Factory Reset

Use Button A + Button B to reset the gateway to the factory settings.

Follow this procedure:

1. Disconnect the gateway from power.
2. Press and hold Button A and Button B simultaneously.
3. Connect the gateway to power again.
4. Wait until the LEDs start to cycle on and off from top to bottom.
5. Release Button A and Button B.

NOTE
The process could take up to 90 seconds to finish.

TIP
If the gateway is connected to Intesis MAPS, the Console viewer in the Diagnostic tab will display the message "Performing reset to factory settings...", indicating that the process has started. Once finished, the Console viewer displays "...done!"

6. Integration into BACnet

6.1. BACnet Templates

The following sections list all the BACnet objects available for each template.

Six templates are available, divided depending on the NIBE model:

- S1156, S1256, S1155, S1255 (page 25)
- S2125, F2120 (Slave 1) (page 29)
- S2125, F2120 (Slave 2) (page 33)
- F2040, F2050 (page 34)
- VVM SVM + S2125, F2120, F2040, F2050 (page 38)
- S735 (page 43)

6.1.1. BACnet Template for S1156, S1256, S1155, and S1255

SPECIFIC SIGNALS		
Object name	**Type**	**Values**
Outdoor temperature (BT1)	0: AI	°C
Return temperature (BT3)	0: AI	°C
Hot water top (BT7)	0: AI	°C
Hot water charging (BT6)	0: AI	°C
Brine in (BT10)	0: AI	°C
Brine out (BT11)	0: AI	°C
Supply line (BT12)	0: AI	°C
Room temperature 1 (BT50)	0: AI	°C
External supply line (BT25)	0: AI	°C
Heating medium pump speed (GP1)	0: AI	%
Current compressor frequency	0: AI	Hz
Brine pump speed (GP2)	0: AI	%
Reversing valve (QN10)	0: AI	0: Heating 1: Hot water

COMMON SIGNALS		
Object name	**Type**	**Values**
Degree minutes	2: AV	-
Degree minutes cooling	2: AV	-
Heating curve	2: AV	-
Offset curve	2: AV	-
Set calculated supply temp - heating	2: AV	°C
Set calculated supply temp - cooling	2: AV	°C
Flow sensor (BF1)	0: AI	l/m
Hot water demand	2: AV	0: Small 1: Medium 2: Large 3: Not in use 4: Smart control
Start temperature HW normal temperature	2: AV	-
Stop temperature HW normal temperature	2: AV	-
Period time hot water	2: AV	-
Period time heating	2: AV	-
Period time pool	2: AV	-
Degree minutes start additional heat	2: AV	-
Degree minutes start compressor	2: AV	-

COMMON SIGNALS		
Object name	**Type**	**Values**
Operating mode	2: AV	0: Auto 1: Manual 2: Add. heat only
Allow add.heat (at operation mode manual)	2: AV	0: Off 1: On
Permit heating (at operation mode manual)	2: AV	0: Off 1: On
Permit cooling (at operation mode manual)	2: AV	0: Off 1: On
Pulse energy meter (BE7/BF3)	0: AI	kWh
Pulse energy meter (BE6/BF2)	0: AI	kWh
Operating prioritisation	0: AI	10: Off 20: Hot water 30: Heat 40: Pool 60: Cooling
Active alarm	0: AI	0: No alarm 1: Active alarm
Alarm number	0: AI	-
Instantaneous used power with compressor and addition	0: AI	W

GROUND WATER PUMP (AXC) SIGNALS		
Object name	**Type**	**Values**
PUMP_Circulation pump GP3	0: AI	0: Off 1: On

POOL 40/310 SIGNALS		
Object name	**Type**	**Values**
POOL_Pool temperature (BT51)	0: AI	°C
POOL_Reversing valve QN19	0: AI	0: Closed to pool 1: Open to pool
POOL_Circulation pump GP9/GP16	0: AI	0: Off 1: On

PASSIVE/ACTIVE COOLING 4-PIPE (ACS 45) SIGNALS		
Object name	**Type**	**Values**
ACS_Cooling temperature (BT64)	0: AI	°C
ACS_Return temperature (BT71)	0: AI	°C
ACS_Collector temperature (BT57)	0: AI	°C
ACS_Heating dump temperat. (BT75)	0: AI	°C
ACS_Reversing valve QN12	0: AI	0: Closed 1: Open

PHOTOVOL CONTROL (EME 20) SIGNALS		
Object name	**Type**	**Values**
PV_Current power	0: AI	W
PV_Total average power (EME 20)	0: AI	W
PV_Total energy	0: AI	kWh
PV_Solar energy used for	0: AI	1: Hot water 2: Heat

VENTILATION HEAT EXCHANGER 1 (ERS S40) SIGNALS		
Object name	**Type**	**Values**
ERS_Exh. air (AZ30-BT20)	0: AI	°C
ERS_Extr. air (AZ30-BT21)	0: AI	°C
ERS_Supp. air (AZ30-BT22)	0: AI	°C
ERS_Outd temperature (AZ30-BT23)	0: AI	°C
ERS_Humidity (AZ30-BM20)	0: AI	%

VENTILATION HEAT EXCHANGER 2 (ERS S40) SIGNALS		
Object name	**Type**	**Values**
ERS_Exh. air (AZ31-BT20)	0: AI	°C
ERS_Extract air (AZ31-BT21)	0: AI	°C
ERS_Supply air (AZ31-BT22)	0: AI	°C
ERS_Outd temperature (AZ31-BT23)	0: AI	°C
ERS_Humidity (AZ31-BM20)	0: AI	%

VENTILATION HEAT EXCHANGER 3 (ERS S40) SIGNALS		
Object name	**Type**	**Values**
ERS_Exh. air (AZ32-BT20)	0: AI	°C
ERS_Extract air (AZ32-BT21)	0: AI	°C
ERS_Supply air (AZ32-BT22)	0: AI	°C
ERS_Outd temperature (AZ32-BT23)	0: AI	°C
ERS_Humidity (AZ32-BM20)	0: AI	%

VENTILATION HEAT EXCHANGER 4 (ERS S40) SIGNALS		
Object name	**Type**	**Values**
ERS_Exh. air (AZ33-BT20)	0: AI	°C
ERS_Extract air (AZ33-BT21)	0: AI	°C
ERS_Supply air (AZ33-BT22)	0: AI	°C
ERS_Outd temperature (AZ33-BT23)	0: AI	°C
ERS_Humidity (AZ33-BM20)	0: AI	%

6.1.2. BACnet Template for S2125 and F2120 (Slave 1)

SPECIFIC SIGNALS		
Object name	**Type**	**Values**
Requested compressor frequency	0: AI	Hz
Supply line (BT12)	0: AI	°C
Outdoor temperature (BT28)	0: AI	°C
Current compressor frequency	0: AI	Hz
Defrost	0: AI	0: Off 1: Active

SMO S40 SIGNALS		
Object name	**Type**	**Values**
Outdoor temperature (BT1)	0: AI	°C
Hot water top (BT7)	0: AI	°C
Hot water charging (BT6)	0: AI	°C
Room temperature 1 (BT50)	0: AI	°C
External supply line (BT25)	0: AI	°C
Return temperature (BT71)	0: AI	°C
Operat. mode charge pump	2: AV	0: Auto 1: Manual
Charge pump (EB100-GP12)	0: AI	%
Reversing valve (QN10)	0: AI	0: Heating 1: Hot water

COMMON SIGNALS		
Object name	**Type**	**Values**
Degree minutes	2: AV	-
Degree minutes cooling	2: AV	-
Heating curve	2: AV	-
Offset curve	2: AV	-
Set calculated supply temp - heating	2: AV	°C
Set calculated supply temp - cooling	2: AV	°C
Flow sensor (BF1)	0: AI	l/m
Hot water demand	2: AV	0: Small 1: Medium 2: Large 3: Not in use 4: Smart control
Start temperature HW normal temperature	2: AV	-
Stop temperature HW normal temperature	2: AV	-

COMMON SIGNALS		
Object name	**Type**	**Values**
Period time hot water	2: AV	-
Period time heating	2: AV	-
Period time pool	2: AV	-
Degree minutes start additional heat	2: AV	-
Degree minutes start compressor	2: AV	-
Operating mode	2: AV	0: Auto 1: Manual 2: Add. heat only
Allow add.heat (at operation mode manual)	2: AV	0: Off 1: On
Permit heating (at operation mode manual)	2: AV	0: Off 1: On
Permit cooling (at operation mode manual)	2: AV	0: Off 1: On
Pulse energy meter (BE7/BF3)	0: AI	kWh
Pulse energy meter (BE6/BF2)	0: AI	kWh
Operating prioritisation	0: AI	10: Off 20: Hot water 30: Heat 40: Pool 60: Cooling
Active alarm	0: AI	0: No alarm 1: Active alarm
Alarm number	0: AI	-
Instantaneous used power with compressor and addition	0: AI	W

EXTERNAL PUMP SIGNALS		
Object name	**Type**	**Values**
PUMP_External heating medium pump (GP10) status	0: AI	0: Off 1: On

POOL 40/310 SIGNALS		
Object name	**Type**	**Values**
POOL_Pool temperature (BT51)	0: AI	°C
POOL_Reversing valve QN19	0: AI	0: Closed to pool 1: Open to pool
POOL_Circulation pump GP9/GP16	0: AI	0: Off 1: On

PASSIVE/ACTIVE COOLING 4-PIPE (ACS 45) SIGNALS		
Object name	**Type**	**Values**
ACS_Cooling temperature (BT64)	0: AI	°C
ACS_Return temperature (BT71)	0: AI	°C
ACS_Collector temperature (BT57)	0: AI	°C
ACS_Heating dump temperat. (BT75)	0: AI	°C
ACS_Reversing valve QN12	0: AI	0: Closed 1: Open

PHOTOVOL CONTROL (EME 20) SIGNALS		
Object name	**Type**	**Values**
PV_Current power	0: AI	W
PV_Total average power (EME 20)	0: AI	W
PV_Total energy	0: AI	kWh
PV_Solar energy used for	0: AI	1: Hot water 2: Heat

VENTILATION HEAT EXCHANGER 1 (ERS S40) SIGNALS		
Object name	**Type**	**Values**
ERS_Exh. air (AZ30-BT20)	0: AI	°C
ERS_Extr. air (AZ30-BT21)	0: AI	°C
ERS_Supp. air (AZ30-BT22)	0: AI	°C
ERS_Outd temperature (AZ30-BT23)	0: AI	°C
ERS_Humidity (AZ30-BM20)	0: AI	%

VENTILATION HEAT EXCHANGER 2 (ERS S40) SIGNALS		
Object name	**Type**	**Values**
ERS_Exh. air (AZ31-BT20)	0: AI	°C
ERS_Extr. air (AZ31-BT21)	0: AI	°C
ERS_Supp. air (AZ31-BT22)	0: AI	°C
ERS_Outd temperature (AZ31-BT23)	0: AI	°C
ERS_Humidity (AZ31-BM20)	0: AI	%

VENTILATION HEAT EXCHANGER 3 (ERS S40) SIGNALS		
Object name	**Type**	**Values**
ERS_Exh. air (AZ32-BT20)	0: AI	°C
ERS_Extract air (AZ32-BT21)	0: AI	°C
ERS_Supply air (AZ32-BT22)	0: AI	°C
ERS_Outd temperature (AZ32-BT23)	0: AI	°C
ERS_Humidity (AZ32-BM20)	0: AI	%

VENTILATION HEAT EXCHANGER 4 (ERS S40) SIGNALS		
Object name	**Type**	**Values**
ERS_Exh. air (AZ33-BT20)	0: AI	°C
ERS_Extract air (AZ33-BT21)	0: AI	°C
ERS_Supply air (AZ33-BT22)	0: AI	°C
ERS_Outd temperature (AZ33-BT23)	0: AI	°C
ERS_Humidity (AZ33-BM20)	0: AI	%

6.1.3. BACnet Template for S2125 and F2120 (Slave 2)

SPECIFIC SIGNALS		
Object name	**Type**	**Values**
Requested compressor frequency	0: AI	Hz
Return temperature (BT3)	0: AI	°C
Supply line (BT12)	0: AI	°C
Outdoor temperature (BT28)	0: AI	°C
Current compressor frequency	0: AI	Hz
Defrost	0: AI	0: Off 1: Active 2: Passive
Alarm number	0: AI	-

6.1.4. BACnet Template for F2040 and F2050

SPECIFIC SIGNALS		
Object name	**Type**	**Values**
Requested compressor frequency	0: AI	Hz
Return temperature (BT3)	0: AI	°C
Supply line (BT12)	0: AI	°C
Outdoor temperature (BT28)	0: AI	°C
Current compressor frequency	0: AI	Hz
Defrost	0: AI	0: Off 1: Active 2: Passive

SMO S40 SIGNALS		
Object name	**Type**	**Values**
Outdoor temperature (BT1)	0: AI	°C
Hot water top (BT7)	0: AI	°C
Hot water charging (BT6)	0: AI	°C
Room temperature 1 (BT50)	0: AI	°C
External supply line (BT25)	0: AI	°C
Return temperature (BT71)	0: AI	°C
Operat. mode charge pump	2: AV	0: Auto 1: Manual
Charge pump (EB100-GP12)	0: AI	%
Reversing valve (QN10)	0: AI	0: Heating 1: Hot water

COMMON SIGNALS		
Object name	**Type**	**Values**
Degree minutes	2: AV	-
Degree minutes cooling	2: AV	-
Heating curve	2: AV	-
Offset curve	2: AV	-
Supply temp. min.	2: AV	°C
Supply temp. max.	2: AV	°C
Flow sensor (BF1)	0: AI	°C
Hot water demand	2: AV	0: Small 1: Medium 2: Large 3: Not in use 4: Smart control

COMMON SIGNALS		
Object name	**Type**	**Values**
Start temperature HW normal temperature	2: AV	-
Stop temperature HW normal temperature	2: AV	-
Period time hot water	2: AV	-
Period time heating	2: AV	-
Period time pool	2: AV	-
Degree minutes start additional heat	2: AV	-
Degree minutes start compressor	2: AV	-
Operating mode	2: AV	0: Auto 1: Manual 2: Add. heat only
Allow add.heat (at operation mode manual)	2: AV	0: Off 1: On
Permit heating (at operation mode manual)	2: AV	0: Off 1: On
Permit cooling (at operation mode manual)	2: AV	0: Off 1: On
Pulse energy meter (BE7/BF3)	0: AI	kWh
Pulse energy meter (BE6/BF2)	0: AI	kWh
Calculated supply temp	0: AI	°C
Calc supply temp cooling	0: AI	°C
Operating prioritisation	0: AI	10: Off 20: Hot water 30: Heat 40: Pool 60: Cooling
Active alarm	0: AI	0: No alarm 1: Active alarm
Alarm number	0: AI	-
Instantaneous used power with compressor and addition	0: AI	W

EXTERNAL PUMP SIGNALS		
Object name	**Type**	**Values**
PUMP_External heating medium pump (GP10) status	0: AI	0: Off 1: On

POOL 40/310 SIGNALS		
Object name	**Type**	**Values**
POOL_Pool temperature (BT51)	0: AI	°C
POOL_Reversing valve QN19	0: AI	0: Closed to pool 1: Open to pool
POOL_Circulation pump GP9/GP16	0: AI	0: Off 1: On

PASSIVE/ACTIVE COOLING 4-PIPE (ACS 45) SIGNALS		
Object name	**Type**	**Values**
ACS_Cooling temperature (BT64)	0: AI	°C
ACS_Return temperature (BT71)	0: AI	°C
ACS_Collector temperature (BT57)	0: AI	°C
ACS_Heating dump temperat. (BT75)	0: AI	°C
ACS_Reversing valve QN12	0: AI	0: Closed 1: Open

PHOTOVOL CONTROL (EME 20) SIGNALS		
Object name	**Type**	**Values**
PV_Current power	0: AI	W
PV_Total average power (EME 20)	0: AI	W
PV_Total energy	0: AI	kWh
PV_Solar energy used for	0: AI	1: Hot water 2: Heat

VENTILATION HEAT EXCHANGER 1 (ERS S40) SIGNALS		
Object name	**Type**	**Values**
ERS_Exh. air (AZ30-BT20)	0: AI	°C
ERS_Extr. air (AZ30-BT21)	0: AI	°C
ERS_Supp. air (AZ30-BT22)	0: AI	°C
ERS_Outd temperature (AZ30-BT23)	0: AI	°C
ERS_Humidity (AZ30-BM20)	0: AI	%

VENTILATION HEAT EXCHANGER 2 (ERS S40) SIGNALS		
Object name	**Type**	**Values**
ERS_Exh. air (AZ31-BT20)	0: AI	°C
ERS_Extr. air (AZ31-BT21)	0: AI	°C
ERS_Supp. air (AZ31-BT22)	0: AI	°C
ERS_Outd temperature (AZ31-BT23)	0: AI	°C
ERS_Humidity (AZ31-BM20)	0: AI	%

VENTILATION HEAT EXCHANGER 3 (ERS S40) SIGNALS		
Object name	**Type**	**Values**
ERS_Exh. air (AZ32-BT20)	0: AI	°C
ERS_Extract air (AZ32-BT21)	0: AI	°C
ERS_Supply air (AZ32-BT22)	0: AI	°C
ERS_Outd temperature (AZ32-BT23)	0: AI	°C
ERS_Humidity (AZ32-BM20)	0: AI	%

VENTILATION HEAT EXCHANGER 4 (ERS S40) SIGNALS		
Object name	**Type**	**Values**
ERS_Exh. air (AZ33-BT20)	0: AI	°C
ERS_Extract air (AZ33-BT21)	0: AI	°C
ERS_Supply air (AZ33-BT22)	0: AI	°C
ERS_Outd temperature (AZ33-BT23)	0: AI	°C
ERS_Humidity (AZ33-BM20)	0: AI	%

6.1.5. BACnet Template for VVM/SVM + S2125, F2120, F2040, or F2050

VVM/SVM MASTER SPECIFIC SIGNALS		
Object name	**Type**	**Values**
Outdoor temperature (BT1)	0: AI	°C
Hot water top (BT7)	0: AI	°C
Hot water charging (BT6)	0: AI	°C
Heating medium pump speed (GP1)	0: AI	%
Reversing valve (QN10)	0: AI	0: Heating 1: Hot water

VVM/SVM MASTER COMMON SIGNALS		
Object name	**Type**	**Values**
Degree minutes	2: AV	-
Degree minutes cooling	2: AV	-
Heating curve	2: AV	-
Offset curve	2: AV	-
Supply temp. min.	2: AV	°C
Supply temp. max.	2: AV	°C
Flow sensor (BF1)	0: AI	°C
Hot water demand	2: AV	0: Small 1: Medium 2: Large 3: Not in use 4: Smart control
Start temperature HW normal temperature	2: AV	-
Stop temperature HW normal temperature	2: AV	-
Period time hot water	2: AV	-
Period time heating	2: AV	-
Period time pool	2: AV	-
Degree minutes start additional heat	2: AV	-
Degree minutes start compressor	2: AV	-
Operating mode	2: AV	0: Auto 1: Manual 2: Add. heat only
Allow add.heat (at operation mode manual)	2: AV	0: Off 1: On
Permit heating (at operation mode manual)	2: AV	0: Off 1: On
Permit cooling (at operation mode manual)	2: AV	0: Off 1: On

VVM/SVM MASTER COMMON SIGNALS		
Object name	**Type**	**Values**
Pulse energy meter (BE7/BF3)	0: AI	kWh
Pulse energy meter (BE6/BF2)	0: AI	kWh
Calculated supply temp	0: AI	°C
Calc supply temp cooling	0: AI	°C
Operating prioritisation	0: AI	10: Off 20: Hot water 30: Heat 40: Pool 60: Cooling
Active alarm	0: AI	0: No alarm 1: Active alarm
Alarm number	0: AI	-
Instantaneous used power with compressor and addition	0: AI	W

S2125 F2120 F2040 F2050 SPECIFIC SIGNALS		
Object name	**Type**	**Values**
Requested compressor frequency	0: AI	Hz
Return temperature (BT3)	0: AI	°C
Supply line (BT12)	0: AI	°C
Outdoor temperature (BT28)	0: AI	°C
Current compressor frequency	0: AI	Hz
Defrost	0: AI	0: Off 1: Active 2: Passive

S2125 F2120 F2040 F2050 COMMON SIGNALS		
Object name	**Type**	**Values**
Degree minutes	2: AV	-
Degree minutes cooling	2: AV	-
Heating curve	2: AV	-
Offset curve	2: AV	-
Supply temp. min.	2: AV	°C
Supply temp. max.	2: AV	°C
Flow sensor (BF1)	0: AI	°C
Hot water demand	2: AV	0: Small 1: Medium 2: Large 3: Not in use 4: Smart control

S2125 F2120 F2040 F2050 COMMON SIGNALS		
Object name	**Type**	**Values**
Start temperature HW normal temperature	2: AV	-
Stop temperature HW normal temperature	2: AV	-
Period time hot water	2: AV	-
Period time heating	2: AV	-
Period time pool	2: AV	-
Degree minutes start additional heat	2: AV	-
Degree minutes start compressor	2: AV	-
Operating mode	2: AV	0: Auto 1: Manual 2: Add. heat only
Allow add.heat (at operation mode manual)	2: AV	0: Off 1: On
Permit heating (at operation mode manual)	2: AV	0: Off 1: On
Permit cooling (at operation mode manual)	2: AV	0: Off 1: On
Pulse energy meter (BE7/BF3)	0: AI	kWh
Pulse energy meter (BE6/BF2)	0: AI	kWh
Calculated supply temp	0: AI	°C
Calc supply temp cooling	0: AI	°C
Operating prioritisation	0: AI	10: Off 20: Hot water 30: Heat 40: Pool 60: Cooling
Active alarm	0: AI	0: No alarm 1: Active alarm
Alarm number	0: AI	-
Instantaneous used power with compressor and addition	0: AI	W

S2125 F2120 F2040 F2050 POOL 40/310 SIGNALS		
Object name	**Type**	**Values**
POOL_Pool temperature (BT51)	0: AI	°C
POOL_Reversing valve QN19	0: AI	0: Closed to pool 1: Open to pool
POOL_Circulation pump GP9/GP16	0: AI	0: Off 1: On

S2125 F2120 F2040 F2050 PASSIVE/ACTIVE COOLING 4-PIPE (ACS 45) SIGNALS		
Object name	**Type**	**Values**
ACS_Cooling temperature (BT64)	0: AI	°C
ACS_Return temperature (BT71)	0: AI	°C
ACS_Collector temperature (BT57)	0: AI	°C
ACS_Heating dump temperat. (BT75)	0: AI	°C
ACS_Reversing valve QN12	0: AI	0: Closed 1: Open

S2125 F2120 F2040 F2050 PHOTOVOL CONTROL (EME 20) SIGNALS		
Object name	**Type**	**Values**
PV_Current power	0: AI	W
PV_Total average power (EME 20)	0: AI	W
PV_Total energy	0: AI	kWh
PV_Solar energy used for	0: AI	1: Hot water 2: Heat

S2125 F2120 F2040 F2050 VENTILATION HEAT EXCHANGER 1 (ERS S40) SIGNALS		
Object name	**Type**	**Values**
ERS_Exh. air (AZ30-BT20)	0: AI	°C
ERS_Extr. air (AZ30-BT21)	0: AI	°C
ERS_Supp. air (AZ30-BT22)	0: AI	°C
ERS_Outd temperature (AZ30-BT23)	0: AI	°C
ERS_Humidity (AZ30-BM20)	0: AI	%

S2125 F2120 F2040 F2050 VENTILATION HEAT EXCHANGER 2 (ERS S40) SIGNALS		
Object name	**Type**	**Values**
ERS_Exh. air (AZ31-BT20)	0: AI	°C
ERS_Extr. air (AZ31-BT21)	0: AI	°C
ERS_Supp. air (AZ31-BT22)	0: AI	°C
ERS_Outd temperature (AZ31-BT23)	0: AI	°C
ERS_Humidity (AZ31-BM20)	0: AI	%

S2125 F2120 F2040 F2050 VENTILATION HEAT EXCHANGER 3 (ERS S40) SIGNALS		
Object name	**Type**	**Values**
ERS_Exh. air (AZ32-BT20)	0: AI	°C
ERS_Extract air (AZ32-BT21)	0: AI	°C
ERS_Supply air (AZ32-BT22)	0: AI	°C
ERS_Outd temperature (AZ32-BT23)	0: AI	°C
ERS_Humidity (AZ32-BM20)	0: AI	%

S2125 F2120 F2040 F2050 VENTILATION HEAT EXCHANGER 4 (ERS S40) SIGNALS		
Object name	**Type**	**Values**
ERS_Exh. air (AZ33-BT20)	0: AI	°C
ERS_Extract air (AZ33-BT21)	0: AI	°C
ERS_Supply air (AZ33-BT22)	0: AI	°C
ERS_Outd temperature (AZ33-BT23)	0: AI	°C
ERS_Humidity (AZ33-BM20)	0: AI	%

6.1.6. BACnet Template for S735

SPECIFIC SIGNALS		
Object name	**Type**	**Values**
Outdoor temperature (BT1)	0: AI	°C
Return temperature (BT3)	0: AI	°C
Hot water top (BT7)	0: AI	°C
Hot water charging (BT6)	0: AI	°C
Supply line (BT12)	0: AI	°C
Exhaust air (BT20)	0: AI	°C
Extract air (BT21)	0: AI	°C
Current compressor frequency	0: AI	Hz
Heating medium pump speed (GP1)	0: AI	%
Airflow (BP16)	0: AI	m3/h
Reversing valve (QN10)	0: AI	0: Heating 1: Hot water
Fan speed GQ2	0: AI	%

COMMON SIGNALS		
Object name	**Type**	**Values**
Degree minutes	2: AV	-
Degree minutes cooling	2: AV	-
Heating curve	2: AV	-
Offset curve	2: AV	-
Supply temp. min.	2: AV	°C
Supply temp. max.	2: AV	°C
Flow sensor (BF1)	0: AI	°C
Hot water demand	2: AV	0: Small 1: Medium 2: Large 3: Not in use 4: Smart control
Start temperature HW normal temperature	2: AV	-
Stop temperature HW normal temperature	2: AV	-
Period time hot water	2: AV	-
Period time heating	2: AV	-
Period time pool	2: AV	-
Degree minutes start additional heat	2: AV	-
Degree minutes start compressor	2: AV	-

COMMON SIGNALS		
Object name	**Type**	**Values**
Operating mode	2: AV	0: Auto 1: Manual 2: Add. heat only
Allow add.heat (at operation mode manual)	2: AV	0: Off 1: On
Permit heating (at operation mode manual)	2: AV	0: Off 1: On
Permit cooling (at operation mode manual)	2: AV	0: Off 1: On
Pulse energy meter (BE7/BF3)	0: AI	kWh
Pulse energy meter (BE6/BF2)	0: AI	kWh
Calculated supply temp	0: AI	°C
Calc supply temp cooling	0: AI	°C
Operating prioritisation	0: AI	10: Off 20: Hot water 30: Heat 40: Pool 60: Cooling
Active alarm	0: AI	0: No alarm 1: Active alarm
Alarm number	0: AI	-
Instantaneous used power with compressor and addition	0: AI	W

POOL 40/310 SIGNALS		
Object name	**Type**	**Values**
POOL_Pool temperature (BT51)	0: AI	°C
POOL_Reversing valve QN19	0: AI	0: Closed to pool 1: Open to pool
POOL_Circulation pump GP9/GP16	0: AI	0: Off 1: On

PASSIVE/ACTIVE COOLING 4-PIPE (ACS 45) SIGNALS		
Object name	**Type**	**Values**
ACS_Cooling temperature (BT64)	0: AI	°C
ACS_Return temperature (BT71)	0: AI	°C
ACS_Collector temperature (BT57)	0: AI	°C
ACS_Heating dump temperat. (BT75)	0: AI	°C
ACS_Reversing valve QN12	0: AI	0: Closed 1: Open

PHOTOVOL CONTROL (EME 20) SIGNALS		
Object name	**Type**	**Values**
PV_Current power	0: AI	W
PV_Total average power (EME 20)	0: AI	W
PV_Total energy	0: AI	kWh
PV_Solar energy used for	0: AI	1: Hot water 2: Heat

VENTILATION HEAT EXCHANGER 1 (ERS S40) SIGNALS		
Object name	**Type**	**Values**
ERS_Exh. air (AZ30-BT20)	0: AI	°C
ERS_Extr. air (AZ30-BT21)	0: AI	°C
ERS_Supp. air (AZ30-BT22)	0: AI	°C
ERS_Outd temperature (AZ30-BT23)	0: AI	°C
ERS_Humidity (AZ30-BM20)	0: AI	%

VENTILATION HEAT EXCHANGER 2 (ERS S40) SIGNALS		
Object name	**Type**	**Values**
ERS_Exh. air (AZ31-BT20)	0: AI	°C
ERS_Extr. air (AZ31-BT21)	0: AI	°C
ERS_Supp. air (AZ31-BT22)	0: AI	°C
ERS_Outd temperature (AZ31-BT23)	0: AI	°C
ERS_Humidity (AZ31-BM20)	0: AI	%

VENTILATION HEAT EXCHANGER 3 (ERS S40) SIGNALS		
Object name	**Type**	**Values**
ERS_Exh. air (AZ32-BT20)	0: AI	°C
ERS_Extract air (AZ32-BT21)	0: AI	°C
ERS_Supply air (AZ32-BT22)	0: AI	°C
ERS_Outd temperature (AZ32-BT23)	0: AI	°C
ERS_Humidity (AZ32-BM20)	0: AI	%

VENTILATION HEAT EXCHANGER 4 (ERS S40) SIGNALS		
Object name	**Type**	**Values**
ERS_Exh. air (AZ33-BT20)	0: AI	°C
ERS_Extract air (AZ33-BT21)	0: AI	°C
ERS_Supply air (AZ33-BT22)	0: AI	°C
ERS_Outd temperature (AZ33-BT23)	0: AI	°C
ERS_Humidity (AZ33-BM20)	0: AI	%

EXTRA CLIMATE SYSTEM (ECS) SIGNALS		
Object name	**Type**	**Values**
ECS_Supply temperature (BT2)	0: AI	°C
ECS_Return temperature (BT3)	0: AI	°C
ECS_Oper. mode shunt climate system 2	0: AI	0: Inactive 10: Off 20: Opening 30: Closing
ECS_Ext. heat. medium pump (GP10)	0: AI	0: Off 1: On
ECS_Shunt 0-10V	0: AI	V

7. Integration into KNX Systems

7.1. NIBE KNX Templates

The following sections list all the KNX objects available for each template.

Six templates are available, divided depending on the NIBE model:

- S1156, S1256, S1155, S1255 (page 48)
- S2125, F2120 (Slave 1) (page 52)
- S2125, F2120 (Slave 2) (page 56)
- F2040, F2050
- VVM, SVM + S2125, F2120, F2040, F2050 (page 61)
- S735 (page 66)

NOTE
KNX Flags:

- **W** (Write): The object changes its value when it receives a GroupValueWrite telegram.
- **T** (Transmit): The object sends a GroupValueWrite telegram when its value changes.
- **R** (Read): The object responds to a GroupValueRead telegram, sending its current value in a GroupValueResponse telegram.
- **U** (Update): The object value is overwritten by the value of a GroupValueResponse telegram.

7.1.1. KNX Template for S1156, S1256, S1155, and S1255

SPECIFIC SIGNALS						
Object name	DPT	Values	Flags			
			U	T	W	R
Outdoor temperature (BT1)	9.001: temperature (°C)	°C		T		R
Return temperature (BT3)	9.001: temperature (°C)	°C		T		R
Hot water top (BT7)	9.001: temperature (°C)	°C		T		R
Hot water charging (BT6)	9.001: temperature (°C)	°C		T		R
Brine in (BT10)	9.001: temperature (°C)	°C		T		R
Brine out (BT11)	9.001: temperature (°C)	°C		T		R
Supply line (BT12)	9.001: temperature (°C)	°C		T		R
Room temperature 1 (BT50)	9.001: temperature (°C)	°C		T		R
External supply line (BT25)	9.001: temperature (°C)	°C		T		R
Heating medium pump speed (GP1)	9.007: percentage (%)	%		T		R
Current compressor frequency	14.033: frequency (Hz)	Hz		T		R
Brine pump speed (GP2)	9.007: percentage (%)	%		T		R
Reversing valve (QN10)	1.x: (2-bit)	0: Heating 1: Hot water		T		R

COMMON SIGNALS						
Object name	DPT	Values	Flags			
			U	T	W	R
Degree minutes	8.x: (2-byte, Signed Value)	-	U	T	W	R
Degree minutes cooling	8.x: (2-byte, Signed Value)	-	U	T	W	R
Heating curve	5.x: (8-bit, Unsigned Value)	-	U	T	W	R
Offset curve	5.x: (8-bit, Unsigned Value)	-	U	T	W	R
Set calculated supply temp - heating	9.001: temperature (°C)	°C	U	T	W	R
Set calculated supply temp - cooling	9.001: temperature (°C)	°C	U	T	W	R
Flow sensor (BF1)	9.025: volume flow (l/h)	l/m		T		R
Hot water demand	5.x: (8-bit, Unsigned Value)	0: Small 1: Medium 2: Large 3: Not in use 4: Smart control	U	T	W	R
Start temperature HW normal temperature	9.001: temperature (°C)	°C	U	T	W	R
Stop temperature HW normal temperature	9.001: temperature (°C)	°C	U	T	W	R
Period time hot water	7.006: time (min)	-	U	T	W	R
Period time heating	7.006: time (min)	-	U	T	W	R
Period time pool	7.006: time (min)	-	U	T	W	R

COMMON SIGNALS						
Object name	DPT	Values	Flags			
			U	T	W	R
Degree minutes start additional heat	8.x: (2-byte, Signed Value)	-	U	T	W	R
Degree minutes start compressor	8.x: (2-byte, Signed Value)	-	U	T	W	R
Operating mode	5.x: (8-bit, Unsigned Value)	0: Auto 1: Manual 2: Add. heat only	U	T	W	R
Allow add.heat (at operation mode manual)	1.001: switch	0: Off 1: On	U	T	W	R
Permit heating (at operation mode manual)	1.001: switch	0: Off 1: On	U	T	W	R
Permit cooling (at operation mode manual)	1.001: switch	0: Off 1: On	U	T	W	R
Pulse energy meter (BE7/BF3)	13.013: active energy (kWh)	kWh		T		R
Pulse energy meter (BE6/BF2)	13.013: active energy (kWh)	kWh		T		R
Operating prioritisation	5.x: (8-bit, Unsigned Value)	10: Off 20: Hot water 30: Heat 40: Pool 60: Cooling		T		R
Active alarm	1.005: alarm	0: No alarm 1: Active alarm		T		R
Alarm number	7.x: (2-byte, Unsigned Value)	-		T		R
Instantaneous used power with compressor and addition	14.056: power (W)	W		T		R

GROUND WATER PUMP (AXC) SIGNALS						
Object name	DPT	Values	Flags			
			U	T	W	R
PUMP_Circulation pump GP3	1.001: (2-byte, Unsigned Value)	0: Off 1: On		T		R

POOL 40/310 SIGNALS						
Object name	DPT	Values	Flags			
			U	T	W	R
POOL_Pool temperature (BT51)	9.001: temperature (°C)	°C		T		
POOL_Reversing valve QN19	1.009: open/close	0: Closed to pool 1: Open to pool		T		
POOL_Circulation pump GP9/GP16	1.001: switch	0: Off 1: On		T		

PASSIVE/ACTIVE COOLING 4-PIPE (ACS 45) SIGNALS						
Object name	DPT	Values	Flags			
			U	T	W	R
ACS_Cooling temperature (BT64)	9.001: temperature (°C)	°C		T		R
ACS_Return temperature (BT71)	9.001: temperature (°C)	°C		T		R
ACS_Collector temperature (BT57)	9.001: temperature (°C)	°C		T		R
ACS_Heating dump temperat. (BT75)	9.001: temperature (°C)	°C		T		R
ACS_Reversing valve QN12	1.009: open/close	0: Closed 1: Open		T		R

PHOTOVOL CONTROL (EME 20) SIGNALS						
Object name	DPT	Values	Flags			
			U	T	W	R
PV_Current power	14.056: power (W)	W		T		R
PV_Total average power (EME 20)	14.056: power (W)	W		T		R
PV_Total energy	13.013: active energy (kWh)	kWh		T		R
PV_Solar energy used for	5.x: (8-bit, Unsigned Value)	1: Hot water 2: Heat		T		R

VENTILATION HEAT EXCHANGER 1 (ERS S40) SIGNALS						
Object name	DPT	Values	Flags			
			U	T	W	R
ERS_Exh. air (AZ30-BT20)	9.001: temperature (°C)	°C		T		R
ERS_Extr. air (AZ30-BT21)	9.001: temperature (°C)	°C		T		R
ERS_Supp. air (AZ30-BT22)	9.001: temperature (°C)	°C		T		R
ERS_Outd temperature (AZ30-BT23)	9.001: temperature (°C)	°C		T		R
ERS_Humidity (AZ30-BM20)	9.007: percentage (%)	%		T		R

VENTILATION HEAT EXCHANGER 2 (ERS S40) SIGNALS						
Object name	DPT	Values	Flags			
			U	T	W	R
ERS_Exh. air (AZ31-BT20)	9.001: temperature (°C)	°C		T		R
ERS_Extr. air (AZ31-BT21)	9.001: temperature (°C)	°C		T		R
ERS_Supp. air (AZ31-BT22)	9.001: temperature (°C)	°C		T		R
ERS_Outd temperature (AZ31-BT23)	9.001: temperature (°C)	°C		T		R
ERS_Humidity (AZ31-BM20)	9.007: percentage (%)	%		T		R

VENTILATION HEAT EXCHANGER 3 (ERS S40) SIGNALS						
Object name	DPT	Values	Flags			
			U	T	W	R
ERS_Exh. air (AZ32-BT20)	9.001: temperature (°C)	°C		T		R
ERS_Extr. air (AZ32-1BT21)	9.001: temperature (°C)	°C		T		R
ERS_Supp. air (AZ32-BT22)	9.001: temperature (°C)	°C		T		R
ERS_Outd temperature (AZ32-BT23)	9.001: temperature (°C)	°C		T		R
ERS_Humidity (AZ32-BM20)	9.007: percentage (%)	%		T		R

VENTILATION HEAT EXCHANGER 4 (ERS S40) SIGNALS						
Object name	DPT	Values	Flags			
			U	T	W	R
ERS_Exh. air (AZ33-BT20)	9.001: temperature (°C)	°C		T		R
ERS_Extr. air (AZ33-1BT21)	9.001: temperature (°C)	°C		T		R
ERS_Supp. air (AZ33-BT22)	9.001: temperature (°C)	°C		T		R
ERS_Outd temperature (AZ33-BT23)	9.001: temperature (°C)	°C		T		R
ERS_Humidity (AZ33-BM20)	9.007: percentage (%)	%		T		R

7.1.2. KNX Template for S2125 and F2120 (Slave 1)

SPECIFIC SIGNALS						
Object name	DPT	Values	Flags			
			U	T	W	R
Requested compressor frequency	14.033: frequency (Hz)	Hz		T		R
Supply line (BT12)	9.001: temperature (ºC)	ºC		T		R
Outdoor temperature (BT28)	9.001: temperature (ºC)	ºC		T		R
Current compressor frequency	14.033: frequency (Hz)	Hz		T		R
Defrost	5.x: (8-bit, Unsigned Value)	0: Off 1: Active		T		R

SMO S40 SIGNALS						
Object name	DPT	Values	Flags			
			U	T	W	R
Outdoor temperature (BT1)	9.001: temperature (ºC)	ºC		T		R
Hot water top (BT7)	9.001: temperature (ºC)	ºC		T		R
Hot water charging (BT6)	9.001: temperature (ºC)	ºC		T		R
Room temperature 1 (BT50)	9.001: temperature (ºC)	ºC		T		R
External supply line (BT25)	9.001: temperature (ºC)	ºC		T		R
Return temperature (BT71)	9.001: temperature (ºC)	ºC		T		R
Operat. mode charge pump	1.x: (1-bit)	0: Auto 1: Manual	U	T	W	R
Charge pump (EB100-GP12)	9.007: percentage (%)	%		T		R
Reversing valve (QN10)	1.x: (1-bit)	0: Heating 1: Hot water		T		R

COMMON SIGNALS						
Object name	DPT	Values	Flags			
			U	T	W	R
Degree minutes	8.x: (2-byte, Signed Value)	-	U	T	W	R
Degree minutes cooling	8.x: (2-byte, Signed Value)	-	U	T	W	R
Heating curve	5.x: (8-bit, Unsigned Value)	-	U	T	W	R
Offset curve	5.x: (8-bit, Unsigned Value)	-	U	T	W	R
Set calculated supply temp - heating	9.001: temperature (ºC)	°C	U	T	W	R
Set calculated supply temp - cooling	9.001: temperature (ºC)	°C	U	T	W	R
Flow sensor (BF1)	9.025: volumne flow (l/h)	l/h		T		R

COMMON SIGNALS						
Object name	DPT	Values	Flags			
			U	T	W	R
Hot water demand	5.x: (8-bit, Unsigned Value)	0: Small 1: Medium 2: Large 3: Not in use 4: Smart control	U	T	W	R
Start temperature HW normal temperature	9.001: temperature (ºC)	-	U	T	W	R
Stop temperature HW normal temperature	9.001: temperature (ºC)	-	U	T	W	R
Period time hot water	7.006: time (min)	-	U	T	W	R
Period time heating	7.006: time (min)	-	U	T	W	R
Period time pool	7.006: time (min)	-	U	T	W	R
Degree minutes start additional heat	8.x: (2-byte, Signed Value)	-	U	T	W	R
Degree minutes start compressor	8.x: (2-byte, Signed Value)	-	U	T	W	R
Operating mode	5.x: (8-bit, Unsigned Value)	0: Auto 1: Manual 2: Add. heat only	U	T	W	R
Allow add.heat (at operation mode manual)	1.001: switch	0: Off 1: On	U	T	W	R
Permit heating (at operation mode manual)	1.001: switch	0: Off 1: On	U	T	W	R
Permit cooling (at operation mode manual)	1.001: switch	0: Off 1: On	U	T	W	R
Pulse energy meter (BE7/BF3)	13.013: active energy (kWh)	kWh		T		R
Pulse energy meter (BE6/BF2)	13.013: active energy (kWh)	kWh		T		R
Operating prioritisation	5.x: (8-bit, Unsigned Value)	10: Off 20: Hot water 30: Heat 40: Pool 60: Cooling		T		R
Active alarm	1.005: alarm	0: No alarm 1: Active alarm		T		R
Alarm number	7.x: (2-byte, Unsigned Value)	-		T		R
Instantaneous used power used power with compressor and addition	14.056: power (W)	W		T		R

EXTERNAL PUMP SIGNALS						
Object name	DPT	Values	Flags			
			U	T	W	R
PUMP_External heating medium pump (GP10)	1.001: switch	0: Off 1: On		T		R

POOL 40/310 SIGNALS						
Object name	DPT	Values	Flags			
			U	T	W	R
POOL_Pool temperature (BT51)	9.001: temperature (ºC)	°C		T		R
POOL_Reversing valve QN19	1.009: open/close	0: Closed to pool 1: Open to pool		T		R
POOL_Circulation pump GP9/GP16	1.001: switch	0: Off 1: On		T		R

PASSIVE/ACTIVE COOLING 4-PIPE (ACS 45) SIGNALS						
Object name	DPT	Values	Flags			
			U	T	W	R
ACS_Cooling temperature (BT64)	9.001: temperature (ºC)	°C		T		R
ACS_Return temperature (BT71)	9.001: temperature (ºC)	°C		T		R
ACS_Collector temperature (BT57)	9.001: temperature (ºC)	°C		T		R
ACS_Heating dump temperat. (BT75)	9.001: temperature (ºC)	°C		T		R
ACS_Reversing valve QN12	1.009: open/close	0: Closed 1: Open		T		R

PHOTOVOL CONTROL (EME 20) SIGNALS						
Object name	DPT	Values	Flags			
			U	T	W	R
PV_Current power	14.056: power (W)	W		T		R
PV_Total average power (EME 20)	14.056: power (W)	W		T		R
PV_Total energy	13.013: active energy (kWh)	kWh		T		R
PV_Solar energy used for	5.x: (8-bit, Unsigned Value)	1: Hot water 2: Heat		T		R

VENTILATION HEAT EXCHANGER 1 (ERS S40) SIGNALS						
Object name	DPT	Values	Flags			
			U	T	W	R
ERS_Exh. air (AZ30-BT20)	9.001: temperature (ºC)	ºC		T		R
ERS_Extr. air (AZ30-BT21)	9.001: temperature (ºC)	ºC		T		R
ERS_Supp. air (AZ30-BT22)	9.001: temperature (ºC)	ºC		T		R
ERS_Outd temperature (AZ30-BT23)	9.001: temperature (ºC)	ºC		T		R
ERS_Humidity (AZ30-BM20)	9.007: percentage (%)	%		T		R

VENTILATION HEAT EXCHANGER 2 (ERS S40) SIGNALS						
Object name	DPT	Values	Flags			
			U	T	W	R
ERS_Exh. air (AZ31-BT20)	9.001: temperature (ºC)	ºC		T		R
ERS_Extr. air (AZ31-BT21)	9.001: temperature (ºC)	ºC		T		R
ERS_Supp. air (AZ31-BT22)	9.001: temperature (ºC)	ºC		T		R
ERS_Outd temperature (AZ31-BT23)	9.001: temperature (ºC)	ºC		T		R
ERS_Humidity (AZ31-BM20)	9.007: percentage (%)	%		T		R

VENTILATION HEAT EXCHANGER 3 (ERS S40) SIGNALS						
Object name	DPT	Values	Flags			
			U	T	W	R
ERS_Exh. air (AZ32-BT20)	9.001: temperature (ºC)	ºC		T		R
ERS_Extr. air (AZ32-BT21)	9.001: temperature (ºC)	ºC		T		R
ERS_Supp. air (AZ32-BT22)	9.001: temperature (ºC)	ºC		T		R
ERS_Outd temperature (AZ32-BT23)	9.001: temperature (ºC)	ºC		T		R
ERS_Humidity (AZ32-BM20)	9.007: percentage (%)	%		T		R

VENTILATION HEAT EXCHANGER 4 (ERS S40) SIGNALS						
Object name	DPT	Values	Flags			
			U	T	W	R
ERS_Exh. air (AZ33-BT20)	9.001: temperature (ºC)	ºC		T		R
ERS_Extr. air (AZ33-BT21)	9.001: temperature (ºC)	ºC		T		R
ERS_Supp. air (AZ33-BT22)	9.001: temperature (ºC)	ºC		T		R
ERS_Outd temperature (AZ33-BT23)	9.001: temperature (ºC)	ºC		T		R
ERS_Humidity (AZ33-BM20)	9.007: percentage (%)	%		T		R

7.1.3. KNX Template for S2125 and F2120 (Slave 2)

SPECIFIC SIGNALS						
Object name	**DPT**	**Values**	**Flags**			
			U	**T**	**W**	**R**
Requested compressor frequency	14.033: frequency (Hz)	Hz		T		R
Return temperature (BT3)	9.001: temperature (ºC)	ºC		T		R
Supply line (BT12)	9.001: temperature (ºC)	ºC		T		R
Outdoor temperature (BT28)	9.001: temperature (ºC)	ºC		T		R
Current compressor frequency	14.033: frequency (Hz)	Hz		T		R
Defrost	5.x: (8-bit, Unsigned Value)	0: Off 1: Active 2: Passive		T		R
Alarm number	7.x: (2-byte, Unsigned Value)	-		T		R

7.1.4. KNX Template for F2040 and F2050

SPECIFIC SIGNALS						
Object name	DPT	Values	Flags			
			U	T	W	R
Requested compressor frequency	14.033: frequency (Hz)	Hz		T		R
Return temperature (BT3)	9.001: temperature (ºC)	ºC		T		R
Supply line (BT12)	9.001: temperature (ºC)	ºC		T		R
Outdoor temperature (BT28)	9.001: temperature (ºC)	ºC		T		R
Current compressor frequency	14.033: frequency (Hz)	Hz		T		R
Defrost	5.x: (8-bit, Unsigned Value)	0: Off 1: Active		T		R

SMO S40 SIGNALS						
Object name	DPT	Values	Flags			
			U	T	W	R
Outdoor temperature (BT1)	9.001: temperature (ºC)	ºC		T		R
Hot water top (BT7)	9.001: temperature (ºC)	ºC		T		R
Hot water charging (BT6)	9.001: temperature (ºC)	ºC		T		R
Room temperature 1 (BT50)	9.001: temperature (ºC)	ºC		T		R
External supply line (BT25)	9.001: temperature (ºC)	ºC		T		R
Return temperature (BT71)	9.001: temperature (ºC)	ºC		T		R
Operat. mode charge pump	1.x: (1-bit)	0: Auto 1: Manual	U	T	W	R
Charge pump (EB100-GP12)	9.007: percentage (%)	%		T		R
Reversing valve (QN10)	1.x: (1-bit)	0: Heating 1: Hot water		T		R

COMMON SIGNALS						
Object name	DPT	Values	Flags			
			U	T	W	R
Degree minutes	8.x: (2-byte, Signed Value)	-	U	T	W	R
Degree minutes cooling	8.x: (2-byte, Signed Value)	-	U	T	W	R
Heating curve	5.x: (8-bit, Unsigned Value)	-	U	T	W	R
Offset curve	5.x: (8-bit, Unsigned Value)	-	U	T	W	R
Supply temp. min	9.001: temperature (ºC)	°C	U	T	W	R
Supply temp. max	9.001: temperature (ºC)	°C	U	T	W	R
Flow sensor (BF1)	9.025: volumne flow (l/h)	l/h		T		R

COMMON SIGNALS						
Object name	DPT	Values	Flags			
			U	T	W	R
Hot water demand	5.x: (8-bit, Unsigned Value)	0: Small 1: Medium 2: Large 3: Not in use 4: Smart control	U	T	W	R
Start temperature HW normal temperature	9.001: temperature (ºC)	-	U	T	W	R
Stop temperature HW normal temperature	9.001: temperature (ºC)	-	U	T	W	R
Period time hot water	7.006: time (min)	-	U	T	W	R
Period time heating	7.006: time (min)	-	U	T	W	R
Period time pool	7.006: time (min)	-	U	T	W	R
Degree minutes start additional heat	8.x: (2-byte, Signed Value)	-	U	T	W	R
Degree minutes start compressor	8.x: (2-byte, Signed Value)	-	U	T	W	R
Operating mode	5.x: (8-bit, Unsigned Value)	0: Auto 1: Manual 2: Add. heat only	U	T	W	R
Allow add.heat (at operation mode manual)	1.001: switch	0: Off 1: On	U	T	W	R
Permit heating (at operation mode manual)	1.001: switch	0: Off 1: On	U	T	W	R
Permit cooling (at operation mode manual)	1.001: switch	0: Off 1: On	U	T	W	R
Pulse energy meter (BE7/BF3)	13.013: active energy (kWh)	kWh		T		R
Pulse energy meter (BE6/BF2)	13.013: active energy (kWh)	kWh		T		R
Calculated supply temp	9.001: temperature (ºC)	ºC		T		R
Calc supply temp cooling	9.001: temperature (ºC)	ºC		T		R
Operating prioritisation	5.x: (8-bit, Unsigned Value)	10: Off 20: Hot water 30: Heat 40: Pool 60: Cooling		T		R
Active alarm	1.005: alarm	0: No alarm 1: Active alarm		T		R
Alarm number	7.x: (2-byte, Unsigned Value)	-		T		R
Instantaneous used power used power with compressor and addition	14.056: power (W)	W		T		R

EXTERNAL PUMP SIGNALS						
Object name	DPT	Values	Flags			
			U	T	W	R
PUMP_External heating medium pump (GP10)	1.001: switch	0: Off 1: On		T		R

POOL 40/310 SIGNALS						
Object name	DPT	Values	Flags			
			U	T	W	R
POOL_Pool temperature (BT51)	9.001: temperature (ºC)	°C		T		R
POOL_Reversing valve QN19	1.009: open/close	0: Closed to pool 1: Open to pool		T		R
POOL_Circulation pump GP9/GP16	1.001: switch	0: Off 1: On		T		R

PASSIVE/ACTIVE COOLING 4-PIPE (ACS 45) SIGNALS						
Object name	DPT	Values	Flags			
			U	T	W	R
ACS_Cooling temperature (BT64)	9.001: temperature (ºC)	°C		T		R
ACS_Return temperature (BT71)	9.001: temperature (ºC)	°C		T		R
ACS_Collector temperature (BT57)	9.001: temperature (ºC)	°C		T		R
ACS_Heating dump temperat. (BT75)	9.001: temperature (ºC)	°C		T		R
ACS_Reversing valve QN12	1.009: open/close	0: Closed 1: Open		T		R

PHOTOVOL CONTROL (EME 20) SIGNALS						
Object name	DPT	Values	Flags			
			U	T	W	R
PV_Current power	14.056: power (W)	W		T		R
PV_Total average power (EME 20)	14.056: power (W)	W		T		R
PV_Total energy	13.013: active energy (kWh)	kWh		T		R
PV_Solar energy used for	5.x: (8-bit, Unsigned Value)	1: Hot water 2: Heat		T		R

VENTILATION HEAT EXCHANGER 1 (ERS S40) SIGNALS						
Object name	DPT	Values	Flags			
			U	T	W	R
ERS_Exh. air (AZ30-BT20)	9.001: temperature (ºC)	ºC		T		R
ERS_Extr. air (AZ30-BT21)	9.001: temperature (ºC)	ºC		T		R
ERS_Supp. air (AZ30-BT22)	9.001: temperature (ºC)	ºC		T		R
ERS_Outd temperature (AZ30-BT23)	9.001: temperature (ºC)	ºC		T		R
ERS_Humidity (AZ30-BM20)	9.007: percentage (%)	%		T		R

VENTILATION HEAT EXCHANGER 2 (ERS S40) SIGNALS						
Object name	DPT	Values	Flags			
			U	T	W	R
ERS_Exh. air (AZ31-BT20)	9.001: temperature (ºC)	ºC		T		R
ERS_Extr. air (AZ31-BT21)	9.001: temperature (ºC)	ºC		T		R
ERS_Supp. air (AZ31-BT22)	9.001: temperature (ºC)	ºC		T		R
ERS_Outd temperature (AZ31-BT23)	9.001: temperature (ºC)	ºC		T		R
ERS_Humidity (AZ31-BM20)	9.007: percentage (%)	%		T		R

VENTILATION HEAT EXCHANGER 3 (ERS S40) SIGNALS						
Object name	DPT	Values	Flags			
			U	T	W	R
ERS_Exh. air (AZ32-BT20)	9.001: temperature (ºC)	ºC		T		R
ERS_Extr. air (AZ32-BT21)	9.001: temperature (ºC)	ºC		T		R
ERS_Supp. air (AZ32-BT22)	9.001: temperature (ºC)	ºC		T		R
ERS_Outd temperature (AZ32-BT23)	9.001: temperature (ºC)	ºC		T		R
ERS_Humidity (AZ32-BM20)	9.007: percentage (%)	%		T		R

VENTILATION HEAT EXCHANGER 4 (ERS S40) SIGNALS						
Object name	DPT	Values	Flags			
			U	T	W	R
ERS_Exh. air (AZ33-BT20)	9.001: temperature (ºC)	ºC		T		R
ERS_Extr. air (AZ33-BT21)	9.001: temperature (ºC)	ºC		T		R
ERS_Supp. air (AZ33-BT22)	9.001: temperature (ºC)	ºC		T		R
ERS_Outd temperature (AZ33-BT23)	9.001: temperature (ºC)	ºC		T		R
ERS_Humidity (AZ33-BM20)	9.007: percentage (%)	%		T		R

7.1.5. KNX Template for VVM/SVM + S2125, F2120, F2040, and F2050

VVM/SVM MASTER SPECIFIC SIGNALS						
Object name	DPT	Values	Flags			
			U	T	W	R
Outdoor temperature (BT1)	9.001: temperature (ºC)	ºC		T		R
Hot water top (BT7)	9.001: temperature (ºC)	ºC		T		R
Hot water charging (BT6)	9.001: temperature (ºC)	ºC		T		R
Heating medium pump speed (GP1)	9.007: percentage (%)	%		T		R
Reversing valve (QN10)	1.x: (1-bit)	0: Heating 1: Hot water		T		R

VVM/SVM MASTER COMMON SIGNALS						
Object name	DPT	Values	Flags			
			U	T	W	R
Degree minutes	8.x: (2-byte, Signed Value)	-	U	T	W	R
Degree minutes cooling	8.x: (2-byte, Signed Value)	-	U	T	W	R
Heating curve	5.x: (8-bit, Unsigned Value)	-	U	T	W	R
Offset curve	5.x: (8-bit, Unsigned Value)	-	U	T	W	R
Set calculated supply temp - heating	9.001: temperature (ºC)	°C	U	T	W	R
Set calculated supply temp - cooling	9.001: temperature (ºC)	°C	U	T	W	R
Flow sensor (BF1)	9.025: volumne flow (l/h)	l/h		T		R
Hot water demand	5.x: (8-bit, Unsigned Value)	0: Small 1: Medium 2: Large 3: Not in use 4: Smart control	U	T	W	R
Start temperature HW normal temperature	9.001: temperature (ºC)	-	U	T	W	R
Stop temperature HW normal temperature	9.001: temperature (ºC)	-	U	T	W	R
Period time hot water	7.006: time (min)	-	U	T	W	R
Period time heating	7.006: time (min)	-	U	T	W	R
Period time pool	7.006: time (min)	-	U	T	W	R
Degree minutes start additional heat	8.x: (2-byte, Signed Value)	-	U	T	W	R
Degree minutes start compressor	8.x: (2-byte, Signed Value)	-	U	T	W	R
Operating mode	5.x: (8-bit, Unsigned Value)	0: Auto 1: Manual 2: Add. heat only	U	T	W	R
Allow add.heat (at operation mode manual)	1.001: switch	0: Off 1: On	U	T	W	R

VVM/SVM MASTER COMMON SIGNALS						
Object name	DPT	Values	Flags			
			U	T	W	R
Permit heating (at operation mode manual)	1.001: switch	0: Off 1: On	U	T	W	R
Permit cooling (at operation mode manual)	1.001: switch	0: Off 1: On	U	T	W	R
Pulse energy meter (BE7/BF3)	13.013: active energy (kWh)	kWh		T		R
Pulse energy meter (BE6/BF2)	13.013: active energy (kWh)	kWh		T		R
Operating prioritisation	5.x: (8-bit, Unsigned Value)	10: Off 20: Hot water 30: Heat 40: Pool 60: Cooling		T		R
Active alarm	1.005: alarm	0: No alarm 1: Active alarm		T		R
Alarm number	7.x: (2-byte, Unsigned Value)	-		T		R
Instantaneous used power used power with compressor and addition	14.056: power (W)	W		T		R

S2125 F2120 F2040 F2050 SPECIFIC SIGNALS						
Object name	DPT	Values	Flags			
			U	T	W	R
Requested compressor frequency	14.033: frequency (Hz)	Hz		T		R
Return temperature (BT3)	9.001: temperature (ºC)	ºC		T		R
Supply line (BT12)	9.001: temperature (ºC)	ºC		T		R
Outdoor temperature (BT28)	9.001: temperature (ºC)	ºC		T		R
Current compressor frequency	14.033: frequency (Hz)	Hz		T		R
Defrost	5.x: (8-bit, Unsigned Value)	0: Off 1: Active		T		R

S2125 F2120 F2040 F2050 COMMON SIGNALS						
Object name	DPT	Values	Flags			
			U	T	W	R
Degree minutes	8.x: (2-byte, Signed Value)	-	U	T	W	R
Degree minutes cooling	8.x: (2-byte, Signed Value)	-	U	T	W	R
Heating curve	5.x: (8-bit, Unsigned Value)	-	U	T	W	R
Offset curve	5.x: (8-bit, Unsigned Value)	-	U	T	W	R
Set calculated supply temp - heating	9.001: temperature (ºC)	°C	U	T	W	R
Set calculated supply temp - cooling	9.001: temperature (ºC)	°C	U	T	W	R
Flow sensor (BF1)	9.025: volumne flow (l/h)	l/h		T		R

S2125 F2120 F2040 F2050 COMMON SIGNALS						
Object name	**DPT**	**Values**	**Flags**			
			U	**T**	**W**	**R**
Hot water demand	5.x: (8-bit, Unsigned Value)	0: Small 1: Medium 2: Large 3: Not in use 4: Smart control	U	T	W	R
Start temperature HW normal temperature	9.001: temperature (ºC)	-	U	T	W	R
Stop temperature HW normal temperature	9.001: temperature (ºC)	-	U	T	W	R
Period time hot water	7.006: time (min)	-	U	T	W	R
Period time heating	7.006: time (min)	-	U	T	W	R
Period time pool	7.006: time (min)	-	U	T	W	R
Degree minutes start additional heat	8.x: (2-byte, Signed Value)	-	U	T	W	R
Degree minutes start compressor	8.x: (2-byte, Signed Value)	-	U	T	W	R
Operating mode	5.x: (8-bit, Unsigned Value)	0: Auto 1: Manual 2: Add. heat only	U	T	W	R
Allow add.heat (at operation mode manual)	1.001: switch	0: Off 1: On	U	T	W	R
Permit heating (at operation mode manual)	1.001: switch	0: Off 1: On	U	T	W	R
Permit cooling (at operation mode manual)	1.001: switch	0: Off 1: On	U	T	W	R
Pulse energy meter (BE7/BF3)	13.013: active energy (kWh)	kWh		T		R
Pulse energy meter (BE6/BF2)	13.013: active energy (kWh)	kWh		T		R
Operating prioritisation	5.x: (8-bit, Unsigned Value)	10: Off 20: Hot water 30: Heat 40: Pool 60: Cooling		T		R
Active alarm	1.005: alarm	0: No alarm 1: Active alarm		T		R
Alarm number	7.x: (2-byte, Unsigned Value)	-		T		R
Instantaneous used power used power with compressor and addition	14.056: power (W)	W		T		R

S2125 F2120 F2040 F2050 POOL 40/310 SIGNALS						
Object name	DPT	Values	Flags			
			U	T	W	R
POOL_Pool temperature (BT51)	9.001: temperature (ºC)	°C		T		R
POOL_Reversing valve QN19	1.009: open/close	0: Closed to pool 1: Open to pool		T		R
POOL_Circulation pump GP9/GP16	1.001: switch	0: Off 1: On		T		R

S2125 F2120 F2040 F2050 PASSIVE/ACTIVE COOLING 4-PIPE (ACS 45) SIGNALS						
Object name	DPT	Values	Flags			
			U	T	W	R
ACS_Cooling temperature (BT64)	9.001: temperature (ºC)	°C		T		R
ACS_Return temperature (BT71)	9.001: temperature (ºC)	°C		T		R
ACS_Collector temperature (BT57)	9.001: temperature (ºC)	°C		T		R
ACS_Heating dump temperat. (BT75)	9.001: temperature (ºC)	°C		T		R
ACS_Reversing valve QN12	1.009: open/close	0: Closed 1: Open		T		R

S2125 F2120 F2040 F2050 PHOTOVOL CONTROL (EME 20) SIGNALS						
Object name	DPT	Values	Flags			
			U	T	W	R
PV_Current power	14.056: power (W)	W		T		R
PV_Total average power (EME 20)	14.056: power (W)	W		T		R
PV_Total energy	13.013: active energy (kWh)	kWh		T		R
PV_Solar energy used for	5.x: (8-bit, Unsigned Value)	1: Hot water 2: Heat		T		R

S2125 F2120 F2040 F2050 VENTILATION HEAT EXCHANGER 1 (ERS S40) SIGNALS						
Object name	DPT	Values	Flags			
			U	T	W	R
ERS_Exh. air (AZ30-BT20)	9.001: temperature (ºC)	ºC		T		R
ERS_Extr. air (AZ30-BT21)	9.001: temperature (ºC)	ºC		T		R
ERS_Supp. air (AZ30-BT22)	9.001: temperature (ºC)	ºC		T		R
ERS_Outd temperature (AZ30-BT23)	9.001: temperature (ºC)	ºC		T		R
ERS_Humidity (AZ30-BM20)	9.007: percentage (%)	%		T		R

S2125 F2120 F2040 F2050 VENTILATION HEAT EXCHANGER 2 (ERS S40) SIGNALS						
Object name	DPT	Values	Flags			
			U	T	W	R
ERS_Exh. air (AZ31-BT20)	9.001: temperature (ºC)	ºC		T		R
ERS_Extr. air (AZ31-BT21)	9.001: temperature (ºC)	ºC		T		R
ERS_Supp. air (AZ31-BT22)	9.001: temperature (ºC)	ºC		T		R
ERS_Outd temperature (AZ31-BT23)	9.001: temperature (ºC)	ºC		T		R
ERS_Humidity (AZ31-BM20)	9.007: percentage (%)	%		T		R

S2125 F2120 F2040 F2050 VENTILATION HEAT EXCHANGER 3 (ERS S40) SIGNALS						
Object name	DPT	Values	Flags			
			U	T	W	R
ERS_Exh. air (AZ32-BT20)	9.001: temperature (ºC)	ºC		T		R
ERS_Extr. air (AZ32-BT21)	9.001: temperature (ºC)	ºC		T		R
ERS_Supp. air (AZ32-BT22)	9.001: temperature (ºC)	ºC		T		R
ERS_Outd temperature (AZ32-BT23)	9.001: temperature (ºC)	ºC		T		R
ERS_Humidity (AZ32-BM20)	9.007: percentage (%)	%		T		R

S2125 F2120 F2040 F2050 VENTILATION HEAT EXCHANGER 4 (ERS S40) SIGNALS						
Object name	DPT	Values	Flags			
			U	T	W	R
ERS_Exh. air (AZ33-BT20)	9.001: temperature (ºC)	ºC		T		R
ERS_Extr. air (AZ33-BT21)	9.001: temperature (ºC)	ºC		T		R
ERS_Supp. air (AZ33-BT22)	9.001: temperature (ºC)	ºC		T		R
ERS_Outd temperature (AZ33-BT23)	9.001: temperature (ºC)	ºC		T		R
ERS_Humidity (AZ33-BM20)	9.007: percentage (%)	%		T		R

7.1.6. KNX Template for S735

SPECIFIC SIGNALS						
Object name	DPT	Values	Flags			
			U	T	W	R
Outdoor temperature (BT1)	9.001: temperature (ºC)	°C		T		R
Return temperature (BT3)	9.001: temperature (ºC)	°C		T		R
Hot water top (BT7)	9.001: temperature (ºC)	°C		T		R
Hot water charging (BT6)	9.001: temperature (ºC)	°C		T		R
Supply line (BT12)	9.001: temperature (ºC)	°C		T		R
Exhaust air (BT20)	9.001: temperature (ºC)	°C		T		R
Extract air (BT21)	9.001: temperature (ºC)	°C		T		R
Current compressor frequency	14.033: frequency (Hz)	Hz		T		R
Heating medium pump speed (GP1)	9.007: percentage (%)	%		T		R
Airflow (BP16)	13.002: flow rate (m3/h)	m3/h		T		R
Reversing valve (QN10)	1.x: (1-bit)	0: Heating 1: Hot water		T		R
Fan speed GQ2	9.007: percentage (%)	%		T		R

COMMON SIGNALS						
Object name	DPT	Values	Flags			
			U	T	W	R
Degree minutes	8.x: (2-byte, Signed Value)	-	U	T	W	R
Degree minutes cooling	8.x: (2-byte, Signed Value)	-	U	T	W	R
Heating curve	5.x: (8-bit, Unsigned Value)	-	U	T	W	R
Offset curve	5.x: (8-bit, Unsigned Value)	-	U	T	W	R
Supply temp. min	9.001: temperature (ºC)	°C	U	T	W	R
Supply temp. max	9.001: temperature (ºC)	°C	U	T	W	R
Flow sensor (BF1)	9.025: volumne flow (l/h)	l/h		T		R
Hot water demand	5.x: (8-bit, Unsigned Value)	0: Small 1: Medium 2: Large 3: Not in use 4: Smart control	U	T	W	R
Start temperature HW normal temperature	9.001: temperature (ºC)	-	U	T	W	R
Stop temperature HW normal temperature	9.001: temperature (ºC)	-	U	T	W	R
Period time hot water	7.006: time (min)	-	U	T	W	R
Period time heating	7.006: time (min)	-	U	T	W	R
Period time pool	7.006: time (min)	-	U	T	W	R
Degree minutes start additional heat	8.x: (2-byte, Signed Value)	-	U	T	W	R

COMMON SIGNALS						
Object name	DPT	Values	Flags			
			U	T	W	R
Degree minutes start compressor	8.x: (2-byte, Signed Value)	-	U	T	W	R
Operating mode	5.x: (8-bit, Unsigned Value)	0: Auto 1: Manual 2: Add. heat only	U	T	W	R
Allow add.heat (at operation mode manual)	1.001: switch	0: Off 1: On	U	T	W	R
Permit heating (at operation mode manual)	1.001: switch	0: Off 1: On	U	T	W	R
Permit cooling (at operation mode manual)	1.001: switch	0: Off 1: On	U	T	W	R
Pulse energy meter (BE7/BF3)	13.013: active energy (kWh)	kWh		T		R
Pulse energy meter (BE6/BF2)	13.013: active energy (kWh)	kWh		T		R
Calculated supply temp	9.001: temperature (ºC)	ºC		T		R
Calc supply temp cooling	9.001: temperature (ºC)	ºC		T		R
Operating prioritisation	5.x: (8-bit, Unsigned Value)	10: Off 20: Hot water 30: Heat 40: Pool 60: Cooling		T		R
Active alarm	1.005: alarm	0: No alarm 1: Active alarm		T		R
Alarm number	7.x: (2-byte, Unsigned Value)	-		T		R
Instantaneous used power used power with compressor and addition	14.056: power (W)	W		T		R

POOL 40/310 SIGNALS						
Object name	DPT	Values	Flags			
			U	T	W	R
POOL_Pool temperature (BT51)	9.001: temperature (ºC)	°C		T		R
POOL_Reversing valve QN19	1.009: open/close	0: Closed to pool 1: Open to pool		T		R
POOL_Circulation pump GP9/GP16	1.001: switch	0: Off 1: On		T		R

PASSIVE/ACTIVE COOLING 4-PIPE (ACS 45) SIGNALS						
Object name	DPT	Values	Flags			
			U	T	W	R
ACS_Cooling temperature (BT64)	9.001: temperature (ºC)	°C		T		R
ACS_Return temperature (BT71)	9.001: temperature (ºC)	°C		T		R
ACS_Collector temperature (BT57)	9.001: temperature (ºC)	°C		T		R
ACS_Heating dump temperat. (BT75)	9.001: temperature (ºC)	°C		T		R
ACS_Reversing valve QN12	1.009: open/close	0: Closed 1: Open		T		R

PHOTOVOL CONTROL (EME 20) SIGNALS						
Object name	DPT	Values	Flags			
			U	T	W	R
PV_Current power	14.056: power (W)	W		T		R
PV_Total average power (EME 20)	14.056: power (W)	W		T		R
PV_Total energy	13.013: active energy (kWh)	kWh		T		R
PV_Solar energy used for	5.x: (8-bit, Unsigned Value)	1: Hot water 2: Heat		T		R

VENTILATION HEAT EXCHANGER 1 (ERS S40) SIGNALS						
Object name	DPT	Values	Flags			
			U	T	W	R
ERS_Exh. air (AZ30-BT20)	9.001: temperature (ºC)	ºC		T		R
ERS_Extr. air (AZ30-BT21)	9.001: temperature (ºC)	ºC		T		R
ERS_Supp. air (AZ30-BT22)	9.001: temperature (ºC)	ºC		T		R
ERS_Outd temperature (AZ30-BT23)	9.001: temperature (ºC)	ºC		T		R
ERS_Humidity (AZ30-BM20)	9.007: percentage (%)	%		T		R

VENTILATION HEAT EXCHANGER 2 (ERS S40) SIGNALS						
Object name	DPT	Values	Flags			
			U	T	W	R
ERS_Exh. air (AZ31-BT20)	9.001: temperature (ºC)	ºC		T		R
ERS_Extr. air (AZ31-BT21)	9.001: temperature (ºC)	ºC		T		R
ERS_Supp. air (AZ31-BT22)	9.001: temperature (ºC)	ºC		T		R
ERS_Outd temperature (AZ31-BT23)	9.001: temperature (ºC)	ºC		T		R
ERS_Humidity (AZ31-BM20)	9.007: percentage (%)	%		T		R

VENTILATION HEAT EXCHANGER 3 (ERS S40) SIGNALS						
Object name	DPT	Values	Flags			
			U	T	W	R
ERS_Exh. air (AZ32-BT20)	9.001: temperature (ºC)	ºC		T		R
ERS_Extr. air (AZ32-BT21)	9.001: temperature (ºC)	ºC		T		R
ERS_Supp. air (AZ32-BT22)	9.001: temperature (ºC)	ºC		T		R
ERS_Outd temperature (AZ32-BT23)	9.001: temperature (ºC)	ºC		T		R
ERS_Humidity (AZ32-BM20)	9.007: percentage (%)	%		T		R

VENTILATION HEAT EXCHANGER 4 (ERS S40) SIGNALS						
Object name	DPT	Values	Flags			
			U	T	W	R
ERS_Exh. air (AZ33-BT20)	9.001: temperature (ºC)	ºC		T		R
ERS_Extr. air (AZ33-BT21)	9.001: temperature (ºC)	ºC		T		R
ERS_Supp. air (AZ33-BT22)	9.001: temperature (ºC)	ºC		T		R
ERS_Outd temperature (AZ33-BT23)	9.001: temperature (ºC)	ºC		T		R
ERS_Humidity (AZ33-BM20)	9.007: percentage (%)	%		T		R

EXTRA CLIMATE SYSTEM (ECS) SIGNALS						
Object name	DPT	Values	Flags			
			U	T	W	R
ECS_Supply temperature (BT2)	9.001: temperature (ºC)	ºC		T		R
ECS_Return temperature (BT3)	9.001: temperature (ºC)	ºC		T		R
ECS_Oper. mode shunt climate system 2	5.x: (8-bit, Unsigned Value)	0: Inactive 10: Off 20: Opening 30: Closing		T		R
ECS_Ext. heat. medium pump (GP10)	1.001: switch	0: Off 1: On		T		R
ECS_Shunt 0-10V	14.027: electric potential (V)	V		T		R

8. Configuration: Change the Gateway's Protocol

Reconfiguring the gateway with a different protocol is very easy:

1. Connect the gateway to the computer and open the configuration tool Intesis MAPS.
2. Select the new template you need.
3. Click **Next** or double-click the template in the list.
4. A message will pop up, asking if you want to save the project currently loaded in the gateway.
5. Click **Yes** or **No**, depending on your needs.
6. Configure the needed parameters and signals for your new project.
7. Send the configuration to the gateway.

NOTE
To know more about the gateway configuration, consult the IN790NIB100A000 Configuration Guide.