BACnet MS/TP Server & BACnet IP Server

Daikin Air Conditioning

Compatible with residential air conditioners commercialized by Daikin

USER MANUAL

Issue date: 11/2024 v1.8 ENGLISH

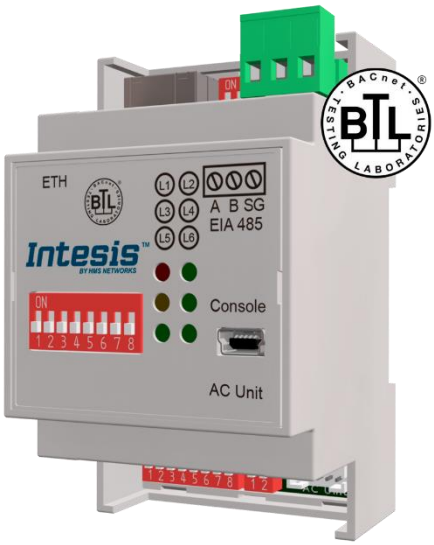

14 rue Edouard Petit
42000 St-Etienne

Tel : +33 477 92 03 56
Email : contact@rg2i.com

www.rg2i.com

Important User Information

Disclaimer

The information in this document is for informational purposes only. Please inform HMS Industrial Networks of any inaccuracies or omissions found in this document. HMS Industrial Networks disclaims any responsibility or liability for any errors that may appear in this document.

HMS Industrial Networks reserves the right to modify its products in line with its policy of continuous product development. The information in this document shall therefore not be construed as a commitment on the part of HMS Industrial Networks and is subject to change without notice. HMS Industrial Networks makes no commitment to update or keep current the information in this document.

The data, examples and illustrations found in this document are included for illustrative purposes and are only intended to help improve understanding of the functionality and handling of the product. In view of the wide range of possible applications of the product, and because of the many variables and requirements associated with any particular implementation, HMS Industrial Networks cannot assume responsibility or liability for actual use based on the data, examples or illustrations included in this document nor for any damages incurred during installation of the product. Those responsible for the use of the product must acquire sufficient knowledge in order to ensure that the product is used correctly in their specific application and that the application meets all performance and safety requirements including any applicable laws, regulations, codes and standards. Further, HMS Industrial Networks will under no circumstances assume liability or responsibility for any problems that may arise as a result from the use of undocumented features or functional side effects found outside the documented scope of the product. The effects caused by any direct or indirect use of such aspects of the product are undefined and may include e.g. compatibility issues and stability issues.

© HMS Industrial Networks S.L.U - All rights reserved
This information is subject to change without notice

Gateway for the integration of a Daikin air conditioning unit in BACnet enabled monitoring and control systems.

Compatible with Domestic Line of air conditioners commercialized by Daikin.

ORDER CODE	LEGACY ORDER CODE
INBACDAI001I000	DK-AC-BAC-1

© HMS Industrial Networks S.L.U - All rights reserved
This information is subject to change without notice

INDEX

1 Description 6
1.1 Introduction 6
1.2 Functionality 7
1.3 Capacity of Intesis 7
1.4 Quick Setup 7
2 Protocol Implementation Conformance Statement 8
2.1 BACnet Standardized Device Profile (Annex L): 8
2.2 Segmentation Capability: 8
2.3 Data Link Layer Options: 8
2.4 Device Address Binding: 9
2.5 Networking Options: 9
2.6 Character Sets Supported 9
2.7 Gateway 9
3 BACnet Interoperability Building Blocks Supported (BIBBs) 10
3.1 Data Sharing BIBBs 10
3.2 Alarm and Event Management BIBBs 10
3.3 Scheduling BIBBs 11
3.4 Trending BIBBs 11
3.5 Network Management BIBBs 11
3.6 Device Management BIBBs 12
4 Service Types 13
5 Objects 14
5.1 Supported Object Types 14
5.2 Member objects 15
5.2.1 Type: Gateway 15
5.2.2 Type: Indoor Unit 15
5.3 Objects and properties 16
5.3.1 Daikin AC Gateway (Device Object Type) 16
5.3.2 OnOff_status (Binary Input Object Type) 18
5.3.3 OnOff_command (Binary Output Object Type) 19
5.3.4 Mode_status (Multistate Input Object Type) 20
5.3.5 Mode_command (Multistate Output Object Type) 21
5.3.6 Setpoint_status (Analog Input Object Type) 22
5.3.7 Setpoint_command (Analog Output Object Type) 23
5.3.8 FanSpeed_status (Multistate Input Object Type) 24
5.3.9 FanSpeed_command (Multistate Output Object Type) 25
5.3.10 AirDirectionUD_status (Multistate Input Object Type) 26
5.3.11 AirDirectionUD_command (Multistate Output Object Type) 27

© HMS Industrial Networks S.L.U - All rights reserved
This information is subject to change without notice

5.3.12 AirDirectionLR_status (Multistate Input Object Type) 28
5.3.13 AirDirectionLR_command (Multistate Output Object Type) 29
5.3.14 RoomTemperature_status (Analog Input Object Type) 30
5.3.15 ErrorCode (Analog Input Object Type) 31
5.3.16 ErrorCodeM (Multistate Input Object Type) 32
5.3.17 ErrorActive (Binary Input Object Type) 34
5.3.18 OnTimeCounter (Analog Value Object Type) 35
5.3.19 Occupancy (Multistate Value Object Type) 36
5.3.20 OccupiedCoolSetPoint (Analog Value Object Type) 37
5.3.21 OccupiedHeatSetPoint (Analog Value Object Type) 38
5.3.22 UnoccupiedCoolSetPoint (Analog Value Object Type) 39
5.3.23 UnoccupiedHeatSetPoint (Analog Value Object Type) 40
5.3.24 OccupancyContinuousCheck (Binary Value Object Type) 41
5.3.25 UnoccupiedDeadbandAction (Binary Value Object Type) 42
5.3.26 LockRemoteControl(Binary Value Object Type) 43
5.3.27 Humidification_status (Multistate Input Object Type) 44
5.3.28 Humidification_command (Multistate Output Object Type) 45
6 Connections and switches 47
6.1 Connect to the AC indoor unit interface 47
6.2 Connect to BACnet MS/TP 48
6.2.1 MS/TP MAC address switch configuration 48
6.2.2 MS/TP activation and baudrate 49
6.3 Connect to BACnet IP 49
6.3.1 BACnet Device Instance 49
7 Set-up process and troubleshooting 50
7.1 Pre-requisites 50
7.2 Physical checking 50
7.3 LED status 50
7.4 Occupancy 51
7.5 Configuration tool 52
7.5.1 Home 52
7.5.2 Configuration 53
7.5.3 Signals 54
8 AC Unit Types compatibility 55
9 Mechanical & electrical characteristics 56
10 Dimensions 56
11 Error codes 57

© HMS Industrial Networks S.L.U - All rights reserved
This information is subject to change without notice

1 Description

1.1 *Introduction*

This document describes the integration of Daikin air conditioning systems into BACnet compatible devices and systems using gateway *INBACDAI001I000.*

The aim of this integration is to monitor and control your Daikin air conditioning system, remotely, from your Control Center using any commercial SCADA or monitoring software that includes a BACnet driver or connect it to other BACnet devices to do any automation. To do it so, Intesis allows BACnet communication allowing polling or subscription requests (COV).

Intesis makes available the Daikin air conditioning system indoor units through independent BACnet objects.

Abstraction of Daikin air conditioning system properties and functionalities as fixed BACnet Objects. Intesis allows fixed BACnet object IDs mapping. Simple configuration is needed: just select the appropriate communication parameters (MAC address, baud rate…).

This document assumes that the user is familiar with BACnet and Daikin technologies and their technical terms.

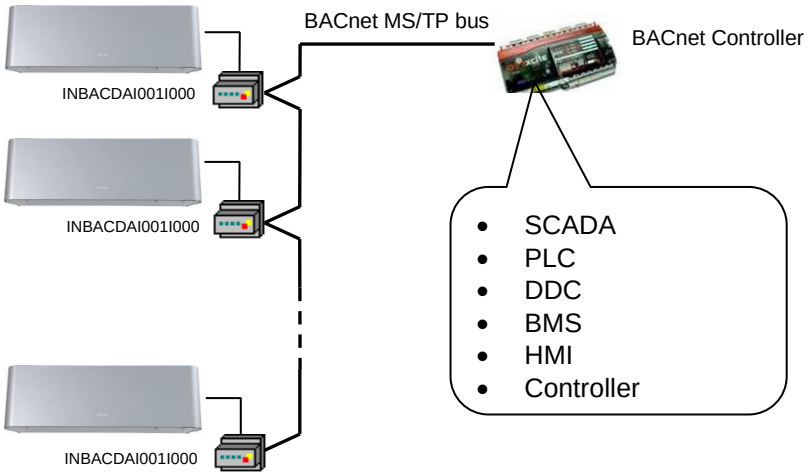

BACnet MS/TP installation sketch

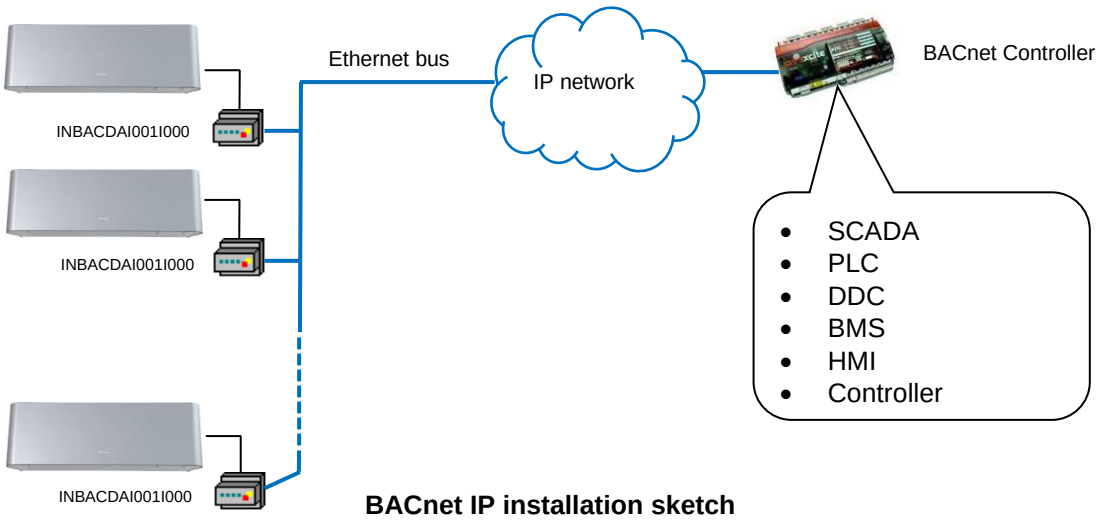

BACnet IP installation sketch

© HMS Industrial Networks S.L.U - All rights reserved
This information is subject to change without notice

1.2 *Functionality*

Intesis continuously read the Daikin AC unit and keeps the updated status of all objects in its memory, ready to be served when requested from the BACnet side.

The role of Intesis consists in associate the elements of the Daikin AC unit with BACnet objects.

The control of the indoor units through the INBACDAI001I000 is permitted, so commands toward the Daikin AC unit are permitted too.

The indoor unit is offered in a set of BACnet objects and extra functionality.

1.3 *Capacity of Intesis*

Intesis is capable of integrating one single Daikin AC unit and its associated elements.

Element	Max.	Notes
Number of indoor units	1	Number of indoor units that can be controlled through Intesis
Number of Objects	20	Number of Daikin AC signals available as objects into Intesis.

1.4 *Quick Setup*

1. Install Intesis in the desired installation site (DIN rail mounting inside a metallic industrial cabinet connected to ground is recommended).
2. Connect the communication cables. Details in section 6.
3. Connect to the Intesis. Details in section 7.5.
4. (Optional) Configure the Intesis using the configuration tool. Details in section 7.5.2.
5. Check the BACnet objects list for its integration to your BACnet project. Details in section 5.2.
6. Check if there is communication between BACnet and AC system. Details in section 7.5.3.
7. The Intesis is ready to be used in your system.

© HMS Industrial Networks S.L.U - All rights reserved
This information is subject to change without notice

2 Protocol Implementation Conformance Statement

BACnet Protocol Implementation Conformance Statement (PICS)

Date: *2015-04-01*
Vendor Name: *HMS Industrial Networks S.L.U*
Product Name: *INBACDAI001I000*
Product Model Number: *INBACDAI001I000*
Application Software Version: *1.0*
Firmware Revision: *1.0.0.0*
BACnet Protocol Revision: *12*

Product Description:

Daikin air conditioning system – BACnet MS/TP & BACnet IP Gateway

Abstraction of Daikin air conditioning system properties and functionalities as BACnet Objects.

2.1 *BACnet Standardized Device Profile (Annex L):*

☐ BACnet Operator Workstation (B-OWS)

☐ BACnet Building Controller (B-BC)

☐ BACnet Advanced Application Controller (B-AAC)

☒ BACnet Application Specific Controller (B-ASC)

☐ BACnet Smart Sensor (B-SS)

☐ BACnet Smart Actuator (B-SA)

Additional BACnet Interoperability Building Blocks Supported (Annex K):
Reference of BIBBs List

2.2 *Segmentation Capability:*

Segmented request supported	☐ No	☒ Yes	Window Size *16*
Segmented responses supported	☐ No	☒ Yes	Window Size *16*

2.3 *Data Link Layer Options:*

☒ BACnet IP, (Annex J)
☒ BACnet IP, (Annex J), Foreign Device
☐ ISO 8802-3, Ethernet (Clause 7)
☐ ANSI/ATA 878.1, 2.5 Mb. ARCNET (Clause 8)
☐ ANSI/ATA 878.1, RS-485 ARCNET (Clause 8), baud rate(s) ____
☒ MS/TP master (Clause 9), baud rate(s): 9600, 19200, 38400, 76800
☐ MS/TP slave (Clause 9), baud rate(s):
☐ Point-To-Point, EIA 232 (Clause 10), baud rate(s):
☐ Point-To-Point, modem, (Clause 10), baud rate(s):
☐ LonTalk, (Clause 11), medium: _____
☐ Other:

© HMS Industrial Networks S.L.U - All rights reserved
This information is subject to change without notice

2.4 *Device Address Binding:*

Is static device binding supported? (This is currently necessary for two-way communication with MS/TP slaves and certain other devices.) ☐ Yes ☒ No

2.5 *Networking Options:*

☐ Router, Clause 6 - List all routing configurations, e.g., ARCNET-Ethernet, Ethernet-MS/TP, etc.
☐ Annex H, BACnet Tunneling Router over IP
☐ BACnet/IP Broadcast Management Device (BBMD)
Does the BBMD support registrations by Foreign Devices? ☐ Yes ☐ No

2.6 *Character Sets Supported*

Indicating support for multiple character sets does not imply that they can all be supported simultaneously.

☒ ANSI X3.4
☐ IBM™/Microsoft™ DBCS
☐ JIS C 6226
☐ ISO 10646 (UCS-4)
☐ ISO 10646 (UCS-2)
☐ ISO 8859-1

2.7 *Gateway*

If this product is a communication gateway, describe the types of non-BACnet equipment/network(s) that the gateway supports:

Daikin Air Conditioning Units compatible with Domestic line air conditioners.

© HMS Industrial Networks S.L.U - All rights reserved
This information is subject to change without notice

3 BACnet Interoperability Building Blocks Supported (BIBBs)

3.1 *Data Sharing BIBBs*

BIBB Type		Active	BACnet Service	Initiate	Execute
DS-RP-A	Data Sharing-ReadProperty–A	☐	ReadProperty	☒	☐
DS-RP-B	Data Sharing-ReadProperty–B	☒	ReadProperty	☐	☒
DS-RPM-A	Data Sharing-ReadPropertyMultiple–A	☐	ReadPropertyMultiple	☒	☐
DS-RPM-B	Data Sharing-ReadPropertyMultiple–B	☒	ReadPropertyMultiple	☐	☒
DS-RPC-A	Data Sharing-ReadPropertyConditiona–A	☐	ReadPropertyConditional	☒	☐
DS-RPC-B	Data Sharing-ReadPropertyConditional–B	☐	ReadPropertyConditional	☐	☒
DS-WP-A	Data Sharing-WriteProperty–A	☐	WriteProperty	☒	☐
DS-WP-B	Data Sharing-WriteProperty–B	☒	WriteProperty	☐	☒
DS-WPM-A	Data Sharing-WritePropertyMultiple–A	☐	WritePropertyMultiple	☒	☐
DS-WPM-B	Data Sharing-WritePropertyMultiple–B	☒	WritePropertyMultiple	☐	☒
DS-COV-A	Data Sharing-COV–A	☐	SubscribeCOV	☒	☐
		☐	ConfirmedCOVNotification	☐	☒
		☐	UnconfirmedCOVNotification	☐	☒
DS-COV-B	Data Sharing-COV–B	☒	SubscribeCOV	☐	☒
		☒	ConfirmedCOVNotification	☒	☐
		☒	UnconfirmedCOVNotification	☒	☐
DS-COVP-A	Data Sharing-COVP–A	☐	SubscribeCOV	☒	☐
		☐	ConfirmedCOVNotification	☐	☒
		☐	UnconfirmedCOVNotification	☐	☒
DS-COVP-B	Data Sharing-COVP–B	☐	SubscribeCOV	☐	☒
		☐	ConfirmedCOVNotification	☒	☐
		☐	UnconfirmedCOVNotification	☒	☐
DS-COVU-A	Data Sharing-COV-Unsolicited–A	☐	UncofirmedCOVNotification	☐	☒
DS-COVU-B	Data Sharing-COV-Unsolicited-B	☐	UncofirmedCOVNotification	☒	☐

3.2 *Alarm and Event Management BIBBs*

BIBB Type		Active	BACnet Service	Initiate	Execute
AE-N-A	Alarm and Event-Notification–A	☐	ConfirmedEventNotification	☐	☒
		☐	UnconfirmedEventNotification	☐	☒
AE-N-I-B	Alarm and Event-Notification Internal–B	☐	ConfirmedEventNotification	☒	☐
		☐	UnconfirmedEventNotification	☒	☐
AE-N-E-B	Alarm and Event-Notification External–B	☐	ConfirmedEventNotification	☒	☐
		☐	UnconfirmedEventNotification	☒	☐
AE-ACK-A	Alarm and Event-ACK–A	☐	AcknowledgeAlarm	☒	☐
AE-ACK-B	Alarm and Event-ACK–B	☐	AcknowledgeAlarm	☐	☒
AE-ASUM-A	Alarm and Event-Summary–A	☐	GetAlarmSummary	☒	☐
AE-ASUM-B	Alarm and Event-Summary–B	☐	GetAlarmSummary	☐	☒
AE-ESUM-A	Event-Summary–A	☐	GetEnrollmentSummary	☒	☐
AE-ESUM-B	Event-Summary–B	☐	GetEnrollmentSummary	☐	☒
AE-INFO-A	Alarm and Event-Information–A	☐	GetEventInformation	☒	☐
AE-INFO-B	Alarm and Event-Information–B	☐	GetEventInformation	☐	☒
AE-LS-A	Alarm and Event-LifeSafety–A	☐	LifeSafetyOperation	☒	☐
AE-LS-B	Alarm and Event-LifeSafety–B	☐	LifeSafetyOperation	☐	☒

© HMS Industrial Networks S.L.U - All rights reserved
This information is subject to change without notice

3.3 *Scheduling BIBBs*

BIBB Type		Active	BACnet Service	Initiate	Execute
SCHED-A	Scheduling–A *(must support DS-RP-A and DS-WP-A)*	☐			
		☐			
SCHED-I-B	Scheduling-Internal–B *(shall support DS-RP-B and DS-WP-B)* *(shall also support ether DM-TS-B or DS-UTC-B)*	☐			
		☐			
SCHED-E-B	Scheduling-External–B *(shall support SCHED-I-B and DS-WP-A)*	☐			
		☐			
T-VMT-A	Trending - Viewing and Modifying Trends–A	☐	ReadRange	☐	☒
T-VMT-I-B	Trending - Viewing and Modifying Trends Inernal–B	☐	ReadRange	☐	☒
T-VMT-E-B	Trending - Viewing and Modifying Trends External–B	☐	ReadRange	☐	☒
T-ATR-A	Trending - Automated Trend Retrieval–A	☐	ConfirmedEventNotification	☐	☒
		☐	ReadRange	☒	☐
T-ATR-B	Trending - Automated Trend Retrieval–B	☐	ConfirmedEventNotification	☒	☐
		☐	ReadRange	☐	☒

3.4 *Trending BIBBs*

BIBB Type		Active	BACnet Service	Initiate	Execute
T-VMT-A	Trending - Viewing and Modifying Trends–A	☐	ReadRange	☒	☐
T-VMT-I-B	Trending - Viewing and Modifying Trends Inernal–B	☐	ReadRange	☐	☒
T-VMT-E-B	Trending - Viewing and Modifying Trends External–B	☐	ReadRange	☐	☒
T-ATR-A	Trending - Automated Trend Retrieval–A	☐	ConfirmedEventNotification	☐	☒
		☐	ReadRange	☒	☐
T-ATR-B	Trending - Automated Trend Retrieval–B	☐	ConfirmedEventNotification	☒	☐
		☐	ReadRange	☐	☒

3.5 *Network Management BIBBs*

BIBB Type		Active	BACnet Service	Initiate	Execute
NM-CE-A	Network Management - Connection Establishment–A	☐	Establish-Connection-To-Network	☒	☐
		☐	Disconnect-Connection-To-Network	☒	☐
NM-CE-B	Network Management - Connection Establishment– B	☐	Establish-Connection-To-Network	☐	☒
		☐	Disconnect-Connection-To-Network	☐	☒
NM-RC-A	Network Management - Router Configuration–A	☐	Who-Is-Router-To-Network	☒	☐
		☐	I-Am-Router-To-Network	☐	☒
		☐	I-Could-Be-Router-To-Network	☐	☒
		☐	Initialize-Routing-Table	☒	☐
		☐	Initialize-Routing-Table-Ack	☐	☒
NM-RC-B	Network Management - Router Configuration–B	☐	Who-Is-Router-To-Network	☒	☒
		☐	I-Am-Router-To-Network	☒	☒
		☐	Initialize-Routing-Table	☐	☒
		☐	Initialize-Routing-Table-Ack	☒	☐

© HMS Industrial Networks S.L.U - All rights reserved
This information is subject to change without notice

3.6 *Device Management BIBBs*

BIBB Type		Active	BACnet Service	Initiate	Execute
DM-DDB-A	Device Management - Dynamic Device Binding–A	☐	Who-Is	☒	☐
		☐	I-Am	☐	☒
DM-DDB-B	Device Management - Dynamic Device Binding–B	☒	Who-Is	☐	☒
		☒	I-Am	☒	☐
DM-DOB-A	Device Management - Dynamic Object Binding–A	☐	Who-Has	☒	☐
		☐	I-Have	☐	☒
DM-DOB-B	Device Management - Dynamic Object Binding–B	☒	Who-Has	☐	☒
		☒	I-Have	☒	☐
DM-DCC-A	Device Management - DeviceCommunicationControl–A	☐	DeviceCommunicationControl	☒	☐
DM-DCC-B	Device Management - DeviceCommunicationControl–B	☒	DeviceCommunicationControl	☐	☒
DM-PT-A	Device Management - PrivateTransfer–A	☐	ConfirmedPrivateTransfer	☒	☐
		☐	UnconfirmedPrivateTransfer	☒	☐
DM-PT-B	Device Management - PrivateTransfer–B	☐	ConfirmedPrivateTransfer	☐	☒
		☐	UnconfirmedPrivateTransfer	☐	☒
DM-TM-A	Device Management - Text Message–A	☐	ConfirmedTextMessage	☒	☐
		☐	UnconfirmedTextMessage	☒	☐
DM-TM-B	Device Management - Text Message–B	☐	ConfirmedTextMessage	☐	☒
		☐	UnconfirmedTextMessage	☐	☒
DM-TS-A	Device Management - TimeSynchronization–A	☐	TimeSynchronization	☒	☐
DM-TS-B	Device Management - TimeSynchronization–B	☐	TimeSynchronization	☐	☒
DM-UTC-A	Device Management - UTCTimeSynchronization–A	☐	UTCTimeSynchronization	☒	☐
DM-UTC-B	Device Management - UTCTimeSynchronization–B	☐	UTCTimeSynchronization	☐	☒
DM-RD-A	Device Management - ReinitializeDevice–A	☐	ReinitializeDevice	☒	☐
DM-RD-B	Device Management - ReinitializeDevice–B	☒	ReinitializeDevice	☐	☒
DM-BR-A	Device Management - Backup and Restore–A	☐	AtomicReadFile	☒	☐
		☐	AtomicWriteFile	☒	☐
		☐	CreateObject	☒	☐
		☐	ReinitializeDevice	☒	☐
DM-BR-B	Device Management - Backup and Restore–B	☐	AtomicReadFile	☐	☒
		☐	AtomicWriteFile	☐	☒
		☐	ReinitializeDevice	☐	☒
DM-R-A	Device Management - Restart–A	☐	UnconfimedCOVNotification	☐	☒
DM-R-B	Device Management - Restart–B	☐	UnconfimedCOVNotification	☒	☐
DM-LM-A	Device Management - List Manipulation–A	☐	AddListElement	☒	☐
		☐	RemoveListElement	☒	☐
DM-LM-B	Device Management - List Manipulation–B	☐	AddListElement	☐	☒
		☐	RemoveListElement	☐	☒
DM-OCD-A	Device Management - Object Creation and Deletion–A	☐	CreateObject	☒	☐
		☐	DeleteObject	☒	☐
DM-OCD-B	Device Management - Object Creation and Deletion–B	☐	CreateObject	☐	☒
		☐	DeleteObject	☐	☒
DM-VT-A	Device Management - Virtual Terminal–A	☐	VT-Open	☒	☐
		☐	VT-Close	☒	☒
		☐	VT-Data	☒	☒
DM-VT-B	Device Management - Virtual Terminal–B	☐	VT-Open	☐	☒
		☐	VT-Close	☒	☒
		☐	VT-Data	☒	☒

© HMS Industrial Networks S.L.U - All rights reserved
This information is subject to change without notice

4 Service Types

Service type	Service name	Supported	Remarks
Alarm and Event Services	AcknowledgeAlarm	☐	
	ConfirmedCOVNotification	☐	
	ConfirmedEventNotification	☐	
	GetAlarmSummary	☐	
	GetEnrollmentSummary	☐	
	SubscribeCOV	☒	
File Access Services	AtomicReadFile	☐	
	AtomicWriteFile	☐	
Object Access Services	AddListElement	☐	
	RemoveListElement	☐	
	CreateObject	☐	
	DeleteObject	☐	
	ReadProperty	☒	
	ReadPropertyConditional	☐	
	ReadPropertyMultiple	☒	
	ReadRange	☐	
	WriteProperty	☒	
	WritePropertyMultiple	☒	
Remote Device Management Services	DeviceComminicationControl	☐	
	ConfirmedPrivateTransfer	☐	
	ConfirmedTextMessage	☐	
	ReinitializeDevice	☒	
Virtual Terminal Services	VtOpen	☐	
	VtClose	☐	
	VtData	☐	
Security Services	Authenticate	☐	
	RequestKey	☐	
Unconfirmed Services	I-Am	☒	
	I-Have	☒	
	UnconfirmedCOVNotification	☐	
	UnconfirmedEventNotification	☐	
	UnconfirmedPrivateTransfer	☐	
	UnconfirmedTextMessage	☐	
	TimeSynchronization	☐	
	UtcTimeSynchronization	☐	
	Who-Has	☒	
	Who-Is	☒	
	LifeSafetyOperation	☐	
	SubscribeCOVProperty	☒	
	GetEventInformation	☐	

© HMS Industrial Networks S.L.U - All rights reserved
This information is subject to change without notice

5 Objects

5.1 *Supported Object Types*

The objects supported are shown in the table below.

Object Type	ID	Supported	Management Point
Analog-Input	0	☒	SetPoint_status ErrorCode
Analog-Output	1	☒	SetPoint_command
Analog-Value	2	☒	OnTimeCounter
Averaging	18	☐	
Binary-Input	3	☒	OnOff_status ErrorCodeActive
Binary-Output	4	☒	OnOff_command
Binary-Value	5	☒	LockRemoteControl
Calendar	6	☐	
Command	7	☐	
Device	8	☒	INBACDAI001I000
Event-Enrollment	9	☐	
File	10	☐	
Group	11	☐	
Life-Safety-Point	21	☐	
Life-Safety-Zone	22	☐	
Loop	12	☐	
Multistate-Input	13	☒	Mode_status FanSpeed_status AirDirectionUD_status AirDirectionLR_status ErrorCodeM Humidification_status
Multistate-Output	14	☒	Mode_command FanSpeed_command AirDirectionUD_command AirDirectionLR_command Humidification_command
Multistate-Value	19	☐	
Notification-Class	15	☐	
Program	16	☐	
Schedule	17	☐	
Trend-Log	20	☐	

© HMS Industrial Networks S.L.U - All rights reserved
This information is subject to change without notice

5.2 *Member objects*

5.2.1 Type: Gateway

Object-name	Description	Object-type	Object-instance
INBACDAI001I000	Daikin AC Interface	Device	246000*

5.2.2 Type: Indoor Unit

Object-name	Description	Object-type	Object-instance
OnOff_status		BI	0
OnOff_command		BO	0
Mode_status		MI	0
Mode_command		MO	0
SetPoint_status		AI	0
SetPoint_command		AO	0
FanSpeed_status		MI	1
FanSpeed_command		MO	1
AirDirectionUD_status		MI	2
AirDirectionUD_command		MO	2
AirDirectionLR_status		MI	3
AirDirectionLR_command		MO	3
RoomTemperature_status		AI	1
ErrorCode		AI	2
ErrorCodeM		MI	4
ErrorActive		BI	1
OnTimeCounter		AV	0
LockRemoteControl		BV	2
Humidication_status		MI	8
Humidication_command		MO	6

* This is the default value. Check section 0 (below) for more information.

© HMS Industrial Networks S.L.U - All rights reserved
This information is subject to change without notice

5.3 *Objects and properties*

Below you can find relevant information for the objects and properties.

Object_Identifier: In the **Device Object**, is configurable writing directly on the property. either from BACnet or through our configuration tools and can be set automatically or manually. When set automatically, it is set using a base address and the address selected in SW2 P1..P7. The base address can be selected using the configuration tool. When set manually, the address is directly the one configured on the configuration tool. See section 7.4 for more information

Object_Name: In the **Device Object**, is configurable writing directly on this property. This can be done using the configuration tools too. See section 7.4 for more information.

Description: In the **Device Object**, is configurable writing directly on the property, length maximum 63 chars. This string is configurable using the configuration tool. See section 7.4 for more information.

5.3.1 Daikin AC Gateway (Device Object Type)

Property Identifier	Property Datatype	Value	ASHRAE	IBOX
Object_Identifier	BACnetObjectIdentifier	(Device, 246000)	R	R
Object_Name	CharacterString	" INBACDAI001I000"	R	R
Object_Type	BACnetObjectType	DEVICE (8) (Device Object Type)	R	R
System_Status	BACnetDeviceStatus	OPERATIONAL (0)	R	R
Vendor_Name	CharacterString	"HMS Industrial Networks S.L.U"	R	R
Vendor_Identifier	Unsigned16	246	R	R
Model_Name	CharacterString	"INBACDAI001I000"	R	R
Firmware_Revision	CharacterString	"1.0.0.0"	R	R
Application_Software_ Version	CharacterString	"1.0.0.0"	R	R
Location	CharacterString	""	O	-
Description	CharacterString	"Daikin AC interface"	O	R
Protocol_Version	Unsigned	1	R	R
Protocol_Revision	Unsigned	12	R	R
Protocol_Services_ Supported	BACnetServiceSupported	Refer to section 4 [Service Types]	R	R
Protocol_Object_Types_ Supported	BACnetObjectTypes Supported	Refer to section 5.1 [Object Types]	R	R
Object_List	BACnetArray[N] of BACnetObjectIdentifier	BACnetARRAY[N]	R	R
Structured_Object_List	BACnetArray[N] of BACnetObjectIdentifier	-	O	-
Max_APDU_Length_ Accepted	Unsigned	480 when MSTP / 1476 when BACnet/IP	R	R
Segmentation_Supported	BACnetSegmentation	SEGMENTED-BOTH (0)	R	R
Max_Segments_accepted	Unsigned	16	O	R
VT_Classes_Supported	List of BACnetVTClass	-	O	-
Active_VT_Sessions	List of BACnetVTSession	-	O	-
Local_Date	Date	-	O	-

© HMS Industrial Networks S.L.U - All rights reserved
This information is subject to change without notice

Local_Time	Time	-	O	-
UTC_Offset	INTEGER	-	O	-
Daylight_Savings_Status	BOOLEAN	-	O	-
APDU_Segment_Timeout	Unsigned	3000	R	R
APDU_Timeout	Unsigned	3000	R	R
Number_of_APDU_ Retries	Unsigned	3	R	R
List_Of_Session_Keys	List of BACnetSessionKey	-	O	-
Time_Synchronization_ Recipients	List of BACnetRecipient	-	O	-
Max_Master * **	Unsigned	127	R	W
Max_Info_Frames *	Unsigned	1	O	R
Device_Address_Binding	List of BACnetAddressBinding	NULL (empty)	R	R
Database_Revision	Unsigned	0	R	R
Configuration_Files	BACnetArray[N] of BACnetObjectIdentifier	-	O	-
Last_Restore_Time	BACnetTimeStamp	-	O	-
Backup_Failure_Timeout	Unsigned16	-	O	-
Active_COV_ Subscriptions	List of BACnetCOVSubscription	List of BACnetCOVSubscription	O	R
Slave_Proxy_Enable	BACnetArray[N] of BOOLEAN	-	O	-
Manual_Slave_Address_ Binding	List of BACnetAddressBinding	-	O	-
Auto_Slave_Discovery	BACnetArray[N] of BOOLEAN	-	O	-
Slave_Address_Binding	BACnetAddressBinding	-	O	-
Last_Restart_Reason	BACnetRestartReason	-	O	-
Time_Of_Device_Restart	BACnetTimeStamp	-	O	-
Restart_Notification_ Recipients	List of BACnetRecipient	-	O	-
UTC_Time_ Synchronization_ Recipients	List of BACnetRecipient	-	O	-
Time_Synchronization_ Interval	Unsigned	-	O	-
Align_Intervals	BOOLEAN	-	O	-
Interval_Offset	Unsigned	-	O	-
Profile_Name	CharacterString	-	O	-

* Only available when MSTP is used

** Configurable through the configuration tool. See section 7.4 for more information.

© HMS Industrial Networks S.L.U - All rights reserved
This information is subject to change without notice

5.3.2 OnOff_status (Binary Input Object Type)

It indicates if the indoor unit is in On or Off status.

Property Identifier	Property Datatype	Value	ASHRAE	IBOX
Object_Identifier	BACnetObjectIdentifier	(Binary Input, 0)	R	R
Object_Name	CharacterString	“OnOff_status”	R	R
Object_Type	BACnetObjectType	BINARY_INPUT (3)	R	R
Present_Value	BACnetBinaryPV	INACTIVE (0) / ACTIVE (1)	R	R
Description	CharacterString	-	O	-
Device_Type	CharacterString	-	O	-
Status_Flags	BACnetStatusFlags	{FALSE, FALSE/TRUE, FALSE, FALSE}	R	R
Event_State	BACnetEventState	STATE_NORMAL (0)	R	R
Reliability	BACnetReliability	NO_FAULT_DETECTED (0), UNRELIABLE_OTHER (7)	O	R
Out_Of_Service	BOOLEAN	FALSE	R	R
Polarity	BACnetPolarity	NORMAL (0)	R	R
Inactive_Text	CharacterString	"Off"	O	R
Active_Text	CharacterString	“On”	O	R
Change_Of_State_Time	BACnetDatetime	-	O	-
Change_Of_State_Count	Unsigned	-	O	-
Time_Of_State_Count_Reset	BACnetDatetime	-	O	-
Elapsed_Active_Time	Unsigned	-	O	-
Time_Of_Active_Time_Reset	BACnetDatetime	-	O	-
Time_Delay	Unsigned	-	O	-
Notification_Class	Unsigned	-	O	-
Alarm_Value	BACnetBinaryPV	-	O	-
Event_Enable	BACnetEventTransitionBits	-	O	-
Acked_Transitions	BACnetEventTransitionBits	-	O	-
Notify_Type	BACnetNotifyType	-	O	-
Event_Time_Stamps	BACnetArray[N] of BACnetTimeStamp	-	O	-
Profile_Name	CharacterString	-	O	-

© HMS Industrial Networks S.L.U - All rights reserved
This information is subject to change without notice

5.3.3 OnOff_command (Binary Output Object Type)

It sets the indoor unit to On or Off.

Property Identifier	Property Datatype	Value	ASHRAE	IBOX
Object_Identifier	BACnetObjectIdentifier	(Binary Output, 0)	R	R
Object_Name	CharacterString	“OnOff_command”	R	R
Object_Type	BACnetObjectType	BINARY_OUTPUT (4)	R	R
Present_Value	BACnetBinaryPV	INACTIVE (0) / ACTIVE (1)	W	W
Description	CharacterString	-	O	-
Device_Type	CharacterString	-	O	-
Status_Flags	BACnetStatusFlags	{FALSE, FALSE, FALSE, FALSE}	R	R
Event_State	BACnetEventState	STATE_NORMAL (0)	R	R
Reliability	BACnetReliability	NO_FAULT_DETECTED (0)	O	R
Out_Of_Service	BOOLEAN	FALSE	R	R
Polarity	BACnetPolarity	NORMAL (0)	R	R
Inactive_Text	CharacterString	"Off"	O	R
Active_Text	CharacterString	“On"	O	R
Change_Of_State_Time	BACnetDatetime	-	O	-
Change_Of_State_Count	Unsigned	-	O	-
Time_Of_State_Count_Reset	BACnetDatetime	-	O	-
Elapsed_Active_Time	Unsigned	-	O	-
Time_Of_Active_Time_Reset	BACnetDatetime	-	O	-
Minimum_Off_Time	Unsigned32	-	O	-
Minimum_On_Time	Unsigned32	-	O	-
Priority_Array	BACnetPriorityArray	BACnetPriorityArray	R	R
Relinquish_Default	BACnetBinaryPV	INACTIVE (0)	R	R
Time_Delay	Unsigned	-	O	-
Notification_Class	Unsigned	-	O	-
Feedback_Value	BACnetBinaryPV	-	O	-
Event_Enable	BACnetEventTransitionBits	-	O	-
Acked_Transitions	BACnetEventTransitionBits	-	O	-
Notify_Type	BACnetNotifyType	-	O	-
Event_Time_Stamps	BACnetArray[N] of BACnetTimeStamp	-	O	-
Profile_Name	CharacterString	-	O	-

© HMS Industrial Networks S.L.U - All rights reserved
This information is subject to change without notice

5.3.4 Mode_status (Multistate Input Object Type)

It indicates the active mode for the indoor unit.

Property Identifier	Property Datatype	Value	ASHRAE	IBOX
Object_Identifier	BACnetObjectIdentifier	(Multi-state Input, 0)	R	R
Object_Name	CharacterString	"Mode_status"	R	R
Object_Type	BACnetObjectType	MULTISTATE_INPUT (13)	R	R
Present_Value	Unsigned	1 ~ 7	R	R
Description	CharacterString	-	O	-
Device_Type	CharacterString	-	O	-
Status_Flags	BACnetStatusFlags	{FALSE, FALSE/TRUE, FALSE, FALSE}	R	R
Event_State	BACnetEventState	STATE_NORMAL (0)	R	R
Reliability	BACnetReliability	NO_FAULT_DETECTED (0), UNRELIABLE_OTHER (7)	O	R
Out_Of_Service	BOOLEAN	FALSE	R	R
Number_Of_States	Unsigned	7	R	R
State_Text	BACnetArray[N] of CharacterString	*Check **Mode Status setting table** below.*	O	R
Time_Delay	Unsigned	-	O	-
Notification_Class	Unsigned	-	O	-
Alarm_Values	List of Unsigned	-	O	-
Fault_Values	List of Unsigned	-	O	-
Event_Enable	BACnetEventTransitionBits	-	O	-
Acked_Transitions	BACnetEventTransitionBits	-	O	-
Notify_Type	BACnetNotifyType	-	O	-
Event_Time_Stamps	BACnetArray[N] of BACnetTimeStamp	-	O	-
Profile_Name	CharacterString	-	O	-

Mode status setting table

Mode status interpretation is possible using the value in the following correspondence table.

Pesent_Value	Contents displayed in State_Text
1	Heat
2	Cool
3	Fan
4	Dry
5	Auto
6	AutoHeat
7	AutoCool

© HMS Industrial Networks S.L.U - All rights reserved
This information is subject to change without notice

5.3.5 Mode_command (Multistate Output Object Type)

It allows control over the indoor unit's mode.

Property Identifier	Property Datatype	Value	ASHRAE	IBOX
Object_Identifier	BACnetObjectIdentifier	(Multi-state Output, 0)	R	R
Object_Name	CharacterString	"Mode_command"	R	R
Object_Type	BACnetObjectType	MULTISTATE_OUTPUT (14)	R	R
Present_Value	Unsigned	1 ~ 5	W	W
Description	CharacterString	-	O	-
Device_Type	CharacterString	-	O	-
Status_Flags	BACnetStatusFlags	{FALSE, FALSE, FALSE, FALSE}	R	R
Event_State	BACnetEventState	STATE_NORMAL (0)	R	R
Reliability	BACnetReliability	NO_FAULT_DETECTED (0)	O	R
Out_Of_Service	BOOLEAN	FALSE	R	R
Number_Of_States	Unsigned	5	R	R
State_Text	BACnetArray[N] of CharacterString	*Check **Mode Command setting table** below*	O	R
Priority_Array	BACnetPriorityArray	BACnetPriorityArray	R	R
Relinquish_Default	Unsigned	1	R	R
Time_Delay	Unsigned	-	O	-
Notification_Class	Unsigned	-	O	-
Feedback_Value	Unsigned	-	O	-
Event_Enable	BACnetEventTransitionBits	-	O	-
Acked_Transitions	BACnetEventTransitionBits	-	O	-
Notify_Type	BACnetNotifyType	-	O	-
Event_Time_Stamps	BACnetArray[N] of BACnetTimeStamp	-	O	-
Profile_Name	CharacterString	-	O	-

Mode Command setting table

Mode commands can be set using the values in the following correspondence table.

Pesent_Value	Contents displayed in State_Text
1	Heat
2	Cool
3	Fan
4	Dry
5	Auto

© HMS Industrial Networks S.L.U - All rights reserved
This information is subject to change without notice

5.3.6 Setpoint_status (Analog Input Object Type)

It indicates the current setpoint temperature in the indoor unit.

Property Identifier	Property Datatype	Value	ASHRAE	IBOX
Object_Identifier	BACnetObjectIdentifier	(Analog Input, 0)	R	R
Object_Name	CharacterString	“SetPoint_status”	R	R
Object_Type	BACnetObjectType	ANALOG_INPUT (0)	R	R
Present_Value *	REAL	10…32 ºC // 50…89,6 ºF	R	R
Description	CharacterString	-	O	-
Device_Type	CharacterString	-	O	-
Status_Flags	BACnetStatusFlags	{FALSE, FALSE/TRUE, FALSE, FALSE}	R	R
Event_State	BACnetEventState	STATE_NORMAL (0)	R	R
Reliability	BACnetReliability	NO_FAULT_DETECTED (0), UNRELIABLE_OTHER (7)	O	R
Out_Of_Service	BOOLEAN	FALSE	R	R
Update_Interval	Unsigned	-	O	-
Units *	BACnetEngineeringUnits	Degrees Celsius (62), Degrees Fahrenheit (64)	R	R
Min_Pres_Value *	REAL	10 // 50	O	R
Max_Pres_Value *	REAL	32 // 89,6	O	R
Resolution	REAL	-	O	-
COV_Increment	REAL	0	O	W
Time_Delay	Unsigned	-	O	-
Notification_Class	Unsigned	-	O	-
High_Limit	REAL	-	O	-
Low_Limit	REAL	-	O	-
Deadband	REAL	-	O	-
Limit_Enable	BACnetLimitEnable	-	O	-
Event_Enable	BACnetEventTransitionBits	-	O	-
Acked_Transitions	BACnetEventTransitionBits	-	O	-
Notify_Type	BACnetNotifyType	-	O	-
Event_Time_Stamps	BACnetArray[N] of BACnetTimeStamp	-	O	-
Profile_Name	CharacterString	-	O	-

* Use of Celsius or Fahrenheits units can be selected throught the switch configuration. Check section 6.1 for more information.

© HMS Industrial Networks S.L.U - All rights reserved
This information is subject to change without notice

5.3.7 Setpoint_command (Analog Output Object Type)

It sets the desired temperature in the indoor unit.

Property Identifier	Property Datatype	Value	ASHRAE	IBOX
Object_Identifier	BACnetObjectIdentifier	(Analog Output, 0)	R	R
Object_Name	CharacterString	“SetPoint_command”	R	R
Object_Type	BACnetObjectType	ANALOG_OUTPUT (1)	R	R
Present_Value *	REAL	10…32 ºC // 50…89,6 ºF	R	R
Description	CharacterString	-	O	-
Device_Type	CharacterString	-	O	-
Status_Flags	BACnetStatusFlags	{FALSE, FALSE, FALSE, FALSE}	R	R
Event_State	BACnetEventState	STATE_NORMAL (0)	R	R
Reliability	BACnetReliability	NO_FAULT_DETECTED (0)	O	R
Out_Of_Service	BOOLEAN	FALSE	R	R
Update_Interval	Unsigned	-	O	-
Units *	BACnetEngineeringUnits	Degrees Celsius (62), Degrees Fahrenheit (64)	R	R
Min_Pres_Value *	REAL	10 // 50	O	R
Max_Pres_Value *	REAL	32 // 89,6	O	R
Resolution	REAL	-	O	-
COV_Increment	REAL	0	O	W
Priority_Array	BACnetPriorityArray	BACnetPriorityArray	R	R
Relinquish_Default	Unsigned	22	R	R
Time_Delay	Unsigned	-	O	-
Notification_Class	Unsigned	-	O	-
High_Limit	REAL	-	O	-
Low_Limit	REAL	-	O	-
Deadband	REAL	-	O	-
Limit_Enable	BACnetLimitEnable	-	O	-
Event_Enable	BACnetEventTransitionBits	-	O	-
Acked_Transitions	BACnetEventTransitionBits	-	O	-
Notify_Type	BACnetNotifyType	-	O	-
Event_Time_Stamps	BACnetArray[N] of BACnetTimeStamp	-	O	-
Profile_Name	CharacterString	-	O	-

* Use of Celsius or Fahrenheits units can be selected throught the switch configuration. Check section 6.1 for more information.

© HMS Industrial Networks S.L.U - All rights reserved
This information is subject to change without notice

5.3.8 FanSpeed_status (Multistate Input Object Type)

It indicates the fan speed status of the indoor unit.

Property Identifier	Property Datatype	Value	ASHRAE	IBOX
Object_Identifier	BACnetObjectIdentifier	(Multi-state Input, 1)	R	R
Object_Name	CharacterString	"FanSpeed_status"	R	R
Object_Type	BACnetObjectType	MULTISTATE_INPUT(13)	R	R
Present_Value	Unsigned	1 ~ 6	R	R
Description	CharacterString	-	O	-
Device_Type	CharacterString	-	O	-
Status_Flags	BACnetStatusFlags	{FALSE, FALSE/TRUE, FALSE, FALSE}	R	R
Event_State	BACnetEventState	STATE_NORMAL (0)	R	R
Reliability	BACnetReliability	NO_FAULT_DETECTED (0), UNRELIABLE_OTHER (7)	O	R
Out_Of_Service	BOOLEAN	FALSE/TRUE	R	R
Number_Of_States	Unsigned	6	R	R
State_Text	BACnetArray[N] of CharacterString	*Check **Fan Speed status setting table** below.*	O	R
Time_Delay	Unsigned	-	O	-
Notification_Class	Unsigned	-	O	-
Alarm_Values	List of Unsigned	-	O	-
Fault_Values	List of Unsigned	-	O	-
Event_Enable	BACnetEventTransitionBits	-	O	-
Acked_Transitions	BACnetEventTransitionBits	-	O	-
Notify_Type	BACnetNotifyType	-	O	-
Event_Time_Stamps	BACnetArray[N] of BACnetTimeStamp	-	O	-
Profile_Name	CharacterString	-	O	-

Fan Speed status setting table

Fan speed interpretation is possible using the value in the following correspondence table.

Pesent_Value	Contents displayed in State_Text
1	Auto
2	Fan Speed 1
3	Fan Speed 2
4	Fan Speed 3
5	Fan Speed 4
6	Fan Speed 5

© HMS Industrial Networks S.L.U - All rights reserved
This information is subject to change without notice

5.3.9 FanSpeed_command (Multistate Output Object Type)

It allows control over the fan speed for the indoor unit.

Property Identifier	Property Datatype	Value	ASHRAE	IBOX
Object_Identifier	BACnetObjectIdentifier	(Multi-state Output, 1)	R	R
Object_Name	CharacterString	“FanSpeed_command”	R	R
Object_Type	BACnetObjectType	MULTISTATE_OUTPUT (14)	R	R
Present_Value	Unsigned	1 ~ 6	W	W
Description	CharacterString	-	O	-
Device_Type	CharacterString	-	O	-
Status_Flags	BACnetStatusFlags	{FALSE, FALSE, FALSE, FALSE}	R	R
Event_State	BACnetEventState	STATE_NORMAL (0)	R	R
Reliability	BACnetReliability	NO_FAULT_DETECTED (0)	O	R
Out_Of_Service	BOOLEAN	FALSE	R	R
Number_Of_States	Unsigned	6	R	R
State_Text	BACnetArray[N] of CharacterString	*Check **Fan Speed command setting table** below*	O	R
Priority_Array	BACnetPriorityArray	BACnetPriorityArray	R	R
Relinquish_Default	Unsigned	1	R	R
Time_Delay	Unsigned	-	O	-
Notification_Class	Unsigned	-	O	-
Feedback_Value	Unsigned	-	O	-
Event_Enable	BACnetEventTransitionBits	-	O	-
Acked_Transitions	BACnetEventTransitionBits	-	O	-
Notify_Type	BACnetNotifyType	-	O	-
Event_Time_Stamps	BACnetArray[N] of BACnetTimeStamp	-	O	-
Profile_Name	CharacterString	-	O	-

Fan Speed command setting table

Fan speed interpretation is possible using the value in the following correspondence table.

Pesent_Value	Contents displayed in State_Text
1	Auto
2	Fan Speed 1
3	Fan Speed 2
4	Fan Speed 3
5	Fan Speed 4
6	Fan Speed 5

© HMS Industrial Networks S.L.U - All rights reserved
This information is subject to change without notice

5.3.10 AirDirectionUD_status (Multistate Input Object Type)

It indicates the status of the vertical vane (Up/Down) for the indoor unit.

Property Identifier	Property Datatype	Value	ASHRAE	IBOX
Object_Identifier	BACnetObjectIdentifier	(Multi-state Input, 2)	R	R
Object_Name	CharacterString	"AirDirectionUD_status"	R	R
Object_Type	BACnetObjectType	MULTISTATE_INPUT(13)	R	R
Present_Value	Unsigned	1 ~ 2	R	R
Description	CharacterString	-	O	-
Device_Type	CharacterString	-	O	-
Status_Flags	BACnetStatusFlags	{FALSE, FALSE/TRUE, FALSE, FALSE}	R	R
Event_State	BACnetEventState	STATE_NORMAL (0)	R	R
Reliability	BACnetReliability	NO_FAULT_DETECTED (0), UNRELIABLE_OTHER (7)	O	R
Out_Of_Service	BOOLEAN	FALSE/TRUE	R	R
Number_Of_States	Unsigned	2	R	R
State_Text	BACnetArray[N] of CharacterString	*Check **Air Direction Status setting table** below.*	O	R
Time_Delay	Unsigned	-	O	-
Notification_Class	Unsigned	-	O	-
Alarm_Values	List of Unsigned	-	O	-
Fault_Values	List of Unsigned	-	O	-
Event_Enable	BACnetEventTransitionBits	-	O	-
Acked_Transitions	BACnetEventTransitionBits	-	O	-
Notify_Type	BACnetNotifyType	-	O	-
Event_Time_Stamps	BACnetArray[N] of BACnetTimeStamp	-	O	-
Profile_Name	CharacterString	-	O	-

Air direction Up/Down status setting table

Air direction interpretation is possible using the value in the following correspondence table.

Pesent_Value	Contents displayed in State_Text
1	Stop
2	Swing

© HMS Industrial Networks S.L.U - All rights reserved
This information is subject to change without notice

5.3.11 AirDirectionUD_command (Multistate Output Object Type)

It allows control over the vertical air direction (Up/Down) for the indoor unit.

Property Identifier	Property Datatype	Value	ASHRAE	IBOX
Object_Identifier	BACnetObjectIdentifier	(Multi-state Output, 3)	R	R
Object_Name	CharacterString	“AirDirectionUD_command”	R	R
Object_Type	BACnetObjectType	MULTISTATE_OUTPUT (14)	R	R
Present_Value	Unsigned	1 ~ 2	W	W
Description	CharacterString	-	O	-
Device_Type	CharacterString	-	O	-
Status_Flags	BACnetStatusFlags	{FALSE, FALSE, FALSE, FALSE}	R	R
Event_State	BACnetEventState	STATE_NORMAL (0)	R	R
Reliability	BACnetReliability	NO_FAULT_DETECTED (0)	O	R
Out_Of_Service	BOOLEAN	FALSE	R	R
Number_Of_States	Unsigned	2	R	R
State_Text	BACnetArray[N] of CharacterString	*Check **Air Direction Command setting table** below*	O	R
Priority_Array	BACnetPriorityArray	-	R	R
Relinquish_Default	Unsigned	-	R	R
Time_Delay	Unsigned	-	O	-
Notification_Class	Unsigned	-	O	-
Feedback_Value	Unsigned	-	O	-
Event_Enable	BACnetEventTransitionBits	-	O	-
Acked_Transitions	BACnetEventTransitionBits	-	O	-
Notify_Type	BACnetNotifyType	-	O	-
Event_Time_Stamps	BACnetArray[N] of BACnetTimeStamp	-	O	-
Profile_Name	CharacterString	-	O	-

Air direction Up/Down Command setting table

Air direction commands can be set using the values in the following correspondence table.

Pesent_Value	Contents displayed in State_Text
1	Stop
2	Swing

© HMS Industrial Networks S.L.U - All rights reserved
This information is subject to change without notice

5.3.12 AirDirectionLR_status (Multistate Input Object Type)

It indicates the status of the horizontal vane (Left/Right) of the indoor unit.

Property Identifier	Property Datatype	Value	ASHRAE	IBOX
Object_Identifier	BACnetObjectIdentifier	(Multi-state Input, 3)	R	R
Object_Name	CharacterString	"AirDirectionLR_status"	R	R
Object_Type	BACnetObjectType	MULTISTATE_INPUT(13)	R	R
Present_Value	Unsigned	1 ~ 2	R	R
Description	CharacterString	-	O	-
Device_Type	CharacterString	-	O	-
Status_Flags	BACnetStatusFlags	{FALSE, FALSE/TRUE, FALSE, FALSE}	R	R
Event_State	BACnetEventState	STATE_NORMAL (0)	R	R
Reliability	BACnetReliability	NO_FAULT_DETECTED (0), UNRELIABLE_OTHER (7)	O	R
Out_Of_Service	BOOLEAN	FALSE/TRUE	R	R
Number_Of_States	Unsigned	2	R	R
State_Text	BACnetArray[N] of CharacterString	*Check **Air Direction Status setting table** below.*	O	R
Time_Delay	Unsigned	-	O	-
Notification_Class	Unsigned	-	O	-
Alarm_Values	List of Unsigned	-	O	-
Fault_Values	List of Unsigned	-	O	-
Event_Enable	BACnetEventTransitionBits	-	O	-
Acked_Transitions	BACnetEventTransitionBits	-	O	-
Notify_Type	BACnetNotifyType	-	O	-
Event_Time_Stamps	BACnetArray[N] of BACnetTimeStamp	-	O	-
Profile_Name	CharacterString	-	O	-

Air direction Left/Right status setting table

Air direction interpretation is possible using the value in the following correspondence table.

Pesent_Value	Contents displayed in State_Text
1	Stop
2	Swing

© HMS Industrial Networks S.L.U - All rights reserved
This information is subject to change without notice

5.3.13 AirDirectionLR_command (Multistate Output Object Type)

It allows control over the horizontal air direction (Left/Right) for the corresponding indoor unit.

Property Identifier	Property Datatype	Value	ASHRAE	IBOX
Object_Identifier	BACnetObjectIdentifier	(Multi-state Output, 3)	R	R
Object_Name	CharacterString	“AirDirectionLR_command”	R	R
Object_Type	BACnetObjectType	MULTISTATE_OUTPUT (14)	R	R
Present_Value	Unsigned	1 ~ 2	W	W
Description	CharacterString	-	O	-
Device_Type	CharacterString	-	O	-
Status_Flags	BACnetStatusFlags	{FALSE, FALSE, FALSE, FALSE}	R	R
Event_State	BACnetEventState	STATE_NORMAL (0)	R	R
Reliability	BACnetReliability	NO_FAULT_DETECTED (0)	O	R
Out_Of_Service	BOOLEAN	FALSE	R	R
Number_Of_States	Unsigned	2	R	R
State_Text	BACnetArray[N] of CharacterString	*Check **Air Direction Command setting table** below*	O	R
Priority_Array	BACnetPriorityArray	-	R	R
Relinquish_Default	Unsigned	-	R	R
Time_Delay	Unsigned	-	O	-
Notification_Class	Unsigned	-	O	-
Feedback_Value	Unsigned	-	O	-
Event_Enable	BACnetEventTransitionBits	-	O	-
Acked_Transitions	BACnetEventTransitionBits	-	O	-
Notify_Type	BACnetNotifyType	-	O	-
Event_Time_Stamps	BACnetArray[N] of BACnetTimeStamp	-	O	-
Profile_Name	CharacterString	-	O	-

Air direction Left/Right Command setting table

Air direction commands can be set using the values in the following correspondence table.

Pesent_Value	Contents displayed in State_Text
1	Stop
2	Swing

© HMS Industrial Networks S.L.U - All rights reserved
This information is subject to change without notice

5.3.14 RoomTemperature_status (Analog Input Object Type)

It indicates the room temperature from the sensor in the indoor unit.

Property Identifier	Property Datatype	Value	ASHRAE	IBOX
Object_Identifier	BACnetObjectIdentifier	(Analog Input, 1)	R	R
Object_Name	CharacterString	“RoomTemperature_status”	R	R
Object_Type	BACnetObjectType	ANALOG_INPUT (0)	R	R
Present_Value	REAL	10…38ºC // 50…89,6 ºF	R	R
Description	CharacterString	-	O	-
Device_Type	CharacterString	-	O	-
Status_Flags	BACnetStatusFlags	{FALSE, FALSE/TRUE, FALSE, FALSE}	R	R
Event_State	BACnetEventState	STATE_NORMAL (0)	R	R
Reliability	BACnetReliability	NO_FAULT_DETECTED (0), UNRELIABLE_OTHER (7)	O	R
Out_Of_Service	BOOLEAN	FALSE/TRUE	R	R
Update_Interval	Unsigned	-	O	-
Units	BACnetEngineeringUnits	Degrees Celsius (62) Degrees Fahrenheit (64)	R	R
Min_Pres_Value	REAL	-	O	-
Max_Pres_Value	REAL	-	O	-
Resolution	REAL	-	O	-
COV_Increment	REAL	0	O	W
Time_Delay	Unsigned	-	O	-
Notification_Class	Unsigned	-	O	-
High_Limit	REAL	-	O	-
Low_Limit	REAL	-	O	-
Deadband	REAL	-	O	-
Limit_Enable	BACnetLimitEnable	-	O	-
Event_Enable	BACnetEventTransitionBits	-	O	-
Acked_Transitions	BACnetEventTransitionBits	-	O	-
Notify_Type	BACnetNotifyType	-	O	-
Event_Time_Stamps	BACnetArray[N] of BACnetTimeStamp	-	O	-
Profile_Name	CharacterString	-	O	-

© HMS Industrial Networks S.L.U - All rights reserved
This information is subject to change without notice

5.3.15 ErrorCode (Analog Input Object Type)

It indicates the current error present in the AC system. Check section 11 for more information on error codes.

Property Identifier	Property Datatype	Value	ASHRAE	IBOX
Object_Identifier	BACnetObjectIdentifier	(Analog Input, 2)	R	R
Object_Name	CharacterString	“ErrorCode”	R	R
Object_Type	BACnetObjectType	ANALOG_INPUT (0)	R	R
Present_Value	REAL	-1… 349	R	R
Description	CharacterString	-	O	-
Device_Type	CharacterString	-	O	-
Status_Flags	BACnetStatusFlags	{FALSE, FALSE, FALSE, FALSE}	R	R
Event_State	BACnetEventState	STATE_NORMAL (0)	R	R
Reliability	BACnetReliability	NO_FAULT_DETECTED (0)	O	R
Out_Of_Service	BOOLEAN	FALSE	R	R
Update_Interval	Unsigned	300	O	-
Units	BACnetEngineeringUnits	NO_UNITS (95)	R	R
Min_Pres_Value	REAL	-	O	-
Max_Pres_Value	REAL	-	O	-
Resolution	REAL	-	O	-
COV_Increment	REAL	0	O	W
Time_Delay	Unsigned	-	O	-
Notification_Class	Unsigned	-	O	-
High_Limit	REAL	-	O	-
Low_Limit	REAL	-	O	-
Deadband	REAL	-	O	-
Limit_Enable	BACnetLimitEnable	-	O	-
Event_Enable	BACnetEventTransitionBits	-	O	-
Acked_Transitions	BACnetEventTransitionBits	-	O	-
Notify_Type	BACnetNotifyType	-	O	-
Event_Time_Stamps	BACnetArray[N] of BACnetTimeStamp	-	O	-
Profile_Name	CharacterString	-	O	-

© HMS Industrial Networks S.L.U - All rights reserved
This information is subject to change without notice

5.3.16 ErrorCodeM (Multistate Input Object Type)

It indicates the current error present in the AC system.

Property Identifier	Property Datatype	Value	ASHRAE	IBOX
Object_Identifier	BACnetObjectIdentifier	(Multi-state Input, 2)	R	R
Object_Name	CharacterString	“ErrorCodeM”	R	R
Object_Type	BACnetObjectType	MULTISTATE_INPUT(13)	R	R
Present_Value	Unsigned	1 ~ 156	R	R
Description	CharacterString	-	O	-
Device_Type	CharacterString	-	O	-
Status_Flags	BACnetStatusFlags	{FALSE, FALSE, FALSE, FALSE}	R	R
Event_State	BACnetEventState	STATE_NORMAL (0)	R	R
Reliability	BACnetReliability	NO_FAULT_DETECTED (0)	O	R
Out_Of_Service	BOOLEAN	FALSE	R	R
Number_Of_States	Unsigned	39	R	R
State_Text	BACnetArray[N] of CharacterString	*Check **Error Code table** below.*	O	R
Time_Delay	Unsigned	-	O	-
Notification_Class	Unsigned	-	O	-
Alarm_Values	List of Unsigned	-	O	-
Fault_Values	List of Unsigned	-	O	-
Event_Enable	BACnetEventTransitionBits	-	O	-
Acked_Transitions	BACnetEventTransitionBits	-	O	-
Notify_Type	BACnetNotifyType	-	O	-
Event_Time_Stamps	BACnetArray[N] of BACnetTimeStamp	-	O	-
Profile_Name	CharacterString	-	O	-

© HMS Industrial Networks S.L.U - All rights reserved
This information is subject to change without notice

Error Code table

In the table below you will find the error correspondence value.

Pesent_Value	Contents displayed in State_Text	Pesent_Value	Contents displayed in State_Text	Pesent_Value	Contents displayed in State_Text
1	-	55	H8	109	U4
2	CommError	56	H9	110	U5
3	A0	57	HA	111	U6
4	A1	58	HH	112	U7
5	A2	59	HC	113	U8
6	A3	60	HE	114	U9
7	A4	61	HF	115	UA
8	A5	62	F0	116	UH
9	A6	63	F1	117	UC
10	A7	64	F2	118	UJ
11	A8	65	F3	119	UE
12	A9	66	F6	120	UF
13	AA	67	FA	121	60
14	AH	68	FH	122	61
15	AJ	69	FC	123	62
16	AE	70	FE	124	63
17	AF	71	FF	125	64
18	C0	72	J0	126	65
19	C3	73	J1	127	68
20	C4	74	J2	128	6A
21	C5	75	J3	129	6H
22	C6	76	J4	130	6C
23	C7	77	J5	131	6J
24	C8	78	J6	132	6E
25	C9	79	J7	133	6F
26	CA	80	J8	134	51
27	CH	81	J9	135	52
28	CC	82	JA	136	53
29	CJ	83	JH	137	54
30	CE	84	JC	138	40
31	CF	85	JE	139	41
32	E0	86	JF	140	42
33	E1	87	L0	141	43
34	E3	88	L3	142	44
35	E4	89	L4	143	31
36	E5	90	L5	144	32
37	E6	91	L6	145	33
38	E7	92	L7	146	34
39	E8	93	L8	147	35
40	E9	94	L9	148	36
41	EA	95	LA	149	3A
42	EH	96	LC	150	3H
43	EC	97	P0	151	3C
44	EJ	98	P1	152	M2
45	EE	99	P3	153	M8
46	EF	100	P4	154	MA
47	H0	101	P5	155	MC
48	H1	102	P6	156	UNKOWN
49	H2	103	P7		
50	H3	104	PJ		
51	H4	105	U0		
52	H5	106	U1		
53	H6	107	U2		
54	H7	108	U3		

© HMS Industrial Networks S.L.U - All rights reserved
This information is subject to change without notice

5.3.17 ErrorActive (Binary Input Object Type)

It indicates if there is an error active in the indoor unit.

Property Identifier	Property Datatype	Value	ASHRAE	IBOX
Object_Identifier	BACnetObjectIdentifier	(Binary Input, 1)	R	R
Object_Name	CharacterString	“ErrorActive”	R	R
Object_Type	BACnetObjectType	BINARY_INPUT (3)	R	R
Present_Value	BACnetBinaryPV	INACTIVE (0) / ACTIVE (1)	R	R
Description	CharacterString	-	O	-
Device_Type	CharacterString	-	O	-
Status_Flags	BACnetStatusFlags	{FALSE, FALSE, FALSE, FALSE}	R	R
Event_State	BACnetEventState	STATE_NORMAL (0)	R	R
Reliability	BACnetReliability	NO_FAULT_DETECTED (0)	O	R
Out_Of_Service	BOOLEAN	FALSE	R	R
Polarity	BACnetPolarity	NORMAL (0)	R	R
Inactive_Text	CharacterString	"No"	O	R
Active_Text	CharacterString	“Error”	O	R
Change_Of_State_Time	BACnetDatetime	-	O	-
Change_Of_State_Count	Unsigned	-	O	-
Time_Of_State_Count_Reset	BACnetDatetime	-	O	-
Elapsed_Active_Time	Unsigned	-	O	-
Time_Of_Active_Time_Reset	BACnetDatetime	-	O	-
Time_Delay	Unsigned	-	O	-
Notification_Class	Unsigned	-	O	-
Alarm_Value	BACnetBinaryPV	-	O	-
Event_Enable	BACnetEventTransitionBits	-	O	-
Acked_Transitions	BACnetEventTransitionBits	-	O	-
Notify_Type	BACnetNotifyType	-	O	-
Event_Time_Stamps	BACnetArray[N] of BACnetTimeStamp	-	O	-
Profile_Name	CharacterString	-	O	-

© HMS Industrial Networks S.L.U - All rights reserved
This information is subject to change without notice

5.3.18 OnTimeCounter (Analog Value Object Type)

It indicates the AC unit's uptime.

Property Identifier	Property Datatype	Value	ASHRAE	IBOX
Object_Identifier	BACnetObjectIdentifier	(Analog Value, 0)	R	R
Object_Name	CharacterString	"OnTimeCounter"	R	R
Object_Type	BACnetObjectType	ANALOG_VALUE (2)	R	R
Present_Value	REAL	0 .. 65535	R	R
Description	CharacterString	-	O	-
Status_Flags	BACnetStatusFlags	{FALSE, FALSE, FALSE, FALSE}	R	R
Event_State	BACnetEventState	STATE_NORMAL (0)	R	R
Reliability	BACnetReliability	NO_FAULT_DETECTED (0)	O	R
Out_Of_Service	BOOLEAN	FALSE	R	R
Update_Interval	Unsigned	-	O	-
Units	BACnetEngineeringUnits	Hours (71)	R	R
Min_Pres_Value	REAL	-	O	-
Max_Pres_Value	REAL	-	O	-
Resolution	REAL	-	O	-
COV_Increment	REAL	0	O	W
Time_Delay	Unsigned	-	O	-
Notification_Class	Unsigned	-	O	-
High_Limit	REAL	-	O	-
Low_Limit	REAL	-	O	-
Deadband	REAL	-	O	-
Limit_Enable	BACnetLimitEnable	-	O	-
Event_Enable	BACnetEventTransitionBits	-	O	-
Acked_Transitions	BACnetEventTransitionBits	-	O	-
Notify_Type	BACnetNotifyType	-	O	-
Event_Time_Stamps	BACnetArray[N] of BACnetTimeStamp	-	O	-
Profile_Name	CharacterString	-	O	-

© HMS Industrial Networks S.L.U - All rights reserved
This information is subject to change without notice

5.3.19 Occupancy (Multistate Value Object Type)

It indicates the use or not of the occupancy function.

Property Identifier	Property Datatype	Value	ASHRAE	IBOX
Object_Identifier	BACnetObjectIdentifier	(Multi-state Output, 0)	R	R
Object_Name	CharacterString	“Occupancy”	R	R
Object_Type	BACnetObjectType	MULTISTATE_VALUE (19)	R	R
Present_Value	Unsigned	1 ~ 3	W	W
Description	CharacterString	-	O	-
Status_Flags	BACnetStatusFlags	{FALSE, FALSE, FALSE, FALSE}	R	R
Event_State	BACnetEventState	STATE_NORMAL (0)	R	R
Reliability	BACnetReliability	NO_FAULT_DETECTED (0)	O	R
Out_Of_Service	BOOLEAN	FALSE	R	R
Number_Of_States	Unsigned	3	R	R
State_Text	BACnetArray[N] of CharacterString	*Check **Occupancy setting table** below*	O	R
Priority_Array	BACnetPriorityArray	-	R	-
Relinquish_Default	Unsigned	-	R	-
Time_Delay	Unsigned	-	O	-
Notification_Class	Unsigned	-	O	-
Alarm_Value	Unsigned	-	O	-
Fault_Value	Unsigned		O	-
Event_Enable	BACnetEventTransitionBits	-	O	-
Acked_Transitions	BACnetEventTransitionBits	-	O	-
Notify_Type	BACnetNotifyType	-	O	-
Event_Time_Stamps	BACnetArray[N] of BACnetTimeStamp	-	O	-
Profile_Name	CharacterString	-	O	-

Occupancy values table

Check possible Occupancy values in the following correspondence table.

Pesent_Value	Contents displayed in State_Text
1	Occupied
2	Unoccupied
3	Disabled

© HMS Industrial Networks S.L.U - All rights reserved
This information is subject to change without notice

5.3.20 OccupiedCoolSetPoint (Analog Value Object Type)

It indicates the current Setpoint when Cool mode is selected and Occupancy is enabled and the room is occupied.

Property Identifier	Property Datatype	Value	ASHRAE	IBOX
Object_Identifier	BACnetObjectIdentifier	(Analog Value, 1)	R	R
Object_Name	CharacterString	“OccupiedCoolSetPoint”	R	R
Object_Type	BACnetObjectType	ANALOG_VALUE (2)	R	R
Present_Value	REAL	0 .. 65535	R	R
Description	CharacterString	-	O	-
Status_Flags	BACnetStatusFlags	{FALSE, FALSE, FALSE, FALSE}	R	R
Event_State	BACnetEventState	STATE_NORMAL (0)	R	R
Reliability	BACnetReliability	NO_FAULT_DETECTED (0)	O	R
Out_Of_Service	BOOLEAN	FALSE	R	R
Update_Interval	Unsigned	-	O	-
Units	BACnetEngineeringUnits	Degrees Celsius (62)	R	R
Min_Pres_Value	REAL	-	O	-
Max_Pres_Value	REAL	-	O	-
Resolution	REAL	-	O	-
COV_Increment	REAL	0	O	W
Time_Delay	Unsigned	-	O	-
Notification_Class	Unsigned	-	O	-
High_Limit	REAL	-	O	-
Low_Limit	REAL	-	O	-
Deadband	REAL	-	O	-
Limit_Enable	BACnetLimitEnable	-	O	-
Event_Enable	BACnetEventTransitionBits	-	O	-
Acked_Transitions	BACnetEventTransitionBits	-	O	-
Notify_Type	BACnetNotifyType	-	O	-
Event_Time_Stamps	BACnetArray[N] of BACnetTimeStamp	-	O	-
Profile_Name	CharacterString	-	O	-

© HMS Industrial Networks S.L.U - All rights reserved
This information is subject to change without notice

5.3.21 OccupiedHeatSetPoint (Analog Value Object Type)

It indicates the current Setpoint when Heat mode is selected and Occupancy is enabled and the room is occupied.

Property Identifier	Property Datatype	Value	ASHRAE	IBOX
Object_Identifier	BACnetObjectIdentifier	(Analog Value, 2)	R	R
Object_Name	CharacterString	“OccupiedHeatSetPoint”	R	R
Object_Type	BACnetObjectType	ANALOG_VALUE (2)	R	R
Present_Value	REAL	0 .. 65535	R	R
Description	CharacterString	-	O	-
Status_Flags	BACnetStatusFlags	{FALSE, FALSE, FALSE, FALSE}	R	R
Event_State	BACnetEventState	STATE_NORMAL (0)	R	R
Reliability	BACnetReliability	NO_FAULT_DETECTED (0)	O	R
Out_Of_Service	BOOLEAN	FALSE	R	R
Update_Interval	Unsigned	-	O	-
Units	BACnetEngineeringUnits	Degrees Celsius (62)	R	R
Min_Pres_Value	REAL	-	O	-
Max_Pres_Value	REAL	-	O	-
Resolution	REAL	-	O	-
COV_Increment	REAL	0	O	W
Time_Delay	Unsigned	-	O	-
Notification_Class	Unsigned	-	O	-
High_Limit	REAL	-	O	-
Low_Limit	REAL	-	O	-
Deadband	REAL	-	O	-
Limit_Enable	BACnetLimitEnable	-	O	-
Event_Enable	BACnetEventTransitionBits	-	O	-
Acked_Transitions	BACnetEventTransitionBits	-	O	-
Notify_Type	BACnetNotifyType	-	O	-
Event_Time_Stamps	BACnetArray[N] of BACnetTimeStamp	-	O	-
Profile_Name	CharacterString	-	O	-

© HMS Industrial Networks S.L.U - All rights reserved
This information is subject to change without notice

5.3.22 UnoccupiedCoolSetPoint (Analog Value Object Type)

It indicates the current Setpoint when Cool mode is selected, Occupancy is enabled and the room is unoccupied.

Property Identifier	Property Datatype	Value	ASHRAE	IBOX
Object_Identifier	BACnetObjectIdentifier	(Analog Value, 3)	R	R
Object_Name	CharacterString	“UnoccupiedCoolSetPoint”	R	R
Object_Type	BACnetObjectType	ANALOG_VALUE (2)	R	R
Present_Value	REAL	0 .. 65535	R	R
Description	CharacterString	-	O	-
Status_Flags	BACnetStatusFlags	{FALSE, FALSE, FALSE, FALSE}	R	R
Event_State	BACnetEventState	STATE_NORMAL (0)	R	R
Reliability	BACnetReliability	NO_FAULT_DETECTED (0)	O	R
Out_Of_Service	BOOLEAN	FALSE	R	R
Update_Interval	Unsigned	-	O	-
Units	BACnetEngineeringUnits	Degrees Celsius (62)	R	R
Min_Pres_Value	REAL	-	O	-
Max_Pres_Value	REAL	-	O	-
Resolution	REAL	-	O	-
COV_Increment	REAL	0	O	W
Time_Delay	Unsigned	-	O	-
Notification_Class	Unsigned	-	O	-
High_Limit	REAL	-	O	-
Low_Limit	REAL	-	O	-
Deadband	REAL	-	O	-
Limit_Enable	BACnetLimitEnable	-	O	-
Event_Enable	BACnetEventTransitionBits	-	O	-
Acked_Transitions	BACnetEventTransitionBits	-	O	-
Notify_Type	BACnetNotifyType	-	O	-
Event_Time_Stamps	BACnetArray[N] of BACnetTimeStamp	-	O	-
Profile_Name	CharacterString	-	O	-

© HMS Industrial Networks S.L.U - All rights reserved
This information is subject to change without notice

5.3.23 UnoccupiedHeatSetPoint (Analog Value Object Type)

It indicates the current Setpoint when Heat mode is selected and Occupancy is enabled and the room is unoccupied.

Property Identifier	Property Datatype	Value	ASHRAE	IBOX
Object_Identifier	BACnetObjectIdentifier	(Analog Value, 4)	R	R
Object_Name	CharacterString	“UnoccupiedHeatSetPoint”	R	R
Object_Type	BACnetObjectType	ANALOG_VALUE (2)	R	R
Present_Value	REAL	0 .. 65535	R	R
Description	CharacterString	-	O	-
Status_Flags	BACnetStatusFlags	{FALSE, FALSE, FALSE, FALSE}	R	R
Event_State	BACnetEventState	STATE_NORMAL (0)	R	R
Reliability	BACnetReliability	NO_FAULT_DETECTED (0)	O	R
Out_Of_Service	BOOLEAN	FALSE	R	R
Update_Interval	Unsigned	-	O	-
Units	BACnetEngineeringUnits	Degrees Celsius (62)	R	R
Min_Pres_Value	REAL	-	O	-
Max_Pres_Value	REAL	-	O	-
Resolution	REAL	-	O	-
COV_Increment	REAL	0	O	W
Time_Delay	Unsigned	-	O	-
Notification_Class	Unsigned	-	O	-
High_Limit	REAL	-	O	-
Low_Limit	REAL	-	O	-
Deadband	REAL	-	O	-
Limit_Enable	BACnetLimitEnable	-	O	-
Event_Enable	BACnetEventTransitionBits	-	O	-
Acked_Transitions	BACnetEventTransitionBits	-	O	-
Notify_Type	BACnetNotifyType	-	O	-
Event_Time_Stamps	BACnetArray[N] of BACnetTimeStamp	-	O	-
Profile_Name	CharacterString	-	O	-

© HMS Industrial Networks S.L.U - All rights reserved
This information is subject to change without notice

5.3.24 OccupancyContinuousCheck (Binary Value Object Type)

It indicates if the system is continuously checking the setpoint and occupancy conditions.

Property Identifier	Property Datatype	Value	ASHRAE	IBOX
Object_Identifier	BACnetObjectIdentifier	(Binary Value, 0)	R	R
Object_Name	CharacterString	“OccupancyContinuousCheck”	R	R
Object_Type	BACnetObjectType	BINARY_VALUE (5)	R	R
Present_Value	BACnetBinaryPV	INACTIVE (0) / ACTIVE (1)	W	W
Description	CharacterString	-	O	-
Status_Flags	BACnetStatusFlags	{FALSE, FALSE, FALSE, FALSE}	R	R
Event_State	BACnetEventState	STATE_NORMAL (0)	R	R
Reliability	BACnetReliability	NO_FAULT_DETECTED (0)	O	R
Out_Of_Service	BOOLEAN	FALSE	R	R
Inactive_Text	CharacterString	"Disabled"	O	R
Active_Text	CharacterString	“Enabled"	O	R
Change_Of_State_Time	BACnetDatetime	-	O	-
Change_Of_State_Count	Unsigned	-	O	-
Time_Of_State_Count_Reset	BACnetDatetime	-	O	-
Elapsed_Active_Time	Unsigned	-	O	-
Time_Of_Active_Time_Reset	BACnetDatetime	-	O	-
Minimum_Off_Time	Unsigned32	-	O	-
Minimum_On_Time	Unsigned32	-	O	-
Priority_Array	BACnetPriorityArray	BACnetPriorityArray	R	-
Relinquish_Default	BACnetBinaryPV	INACTIVE (0)	R	-
Time_Delay	Unsigned	-	O	-
Notification_Class	Unsigned	-	O	-
Alarm_Value	BACnetBinaryPV	-	O	-
Event_Enable	BACnetEventTransitionBits	-	O	-
Acked_Transitions	BACnetEventTransitionBits	-	O	-
Notify_Type	BACnetNotifyType	-	O	-
Event_Time_Stamps	BACnetArray[N] of BACnetTimeStamp	-	O	-
Profile_Name	CharacterString	-	O	-

© HMS Industrial Networks S.L.U - All rights reserved
This information is subject to change without notice

5.3.25 UnoccupiedDeadbandAction (Binary Value Object Type)

It indicates the action to be performed by the system when Unoccupancy is enabled and Room Temperature is within the deadband.

Property Identifier	Property Datatype	Value	ASHRAE	IBOX
Object_Identifier	BACnetObjectIdentifier	(Binary Value, 1)	R	R
Object_Name	CharacterString	“UnoccupiedDeadbandAction”	R	R
Object_Type	BACnetObjectType	BINARY_VALUE (5)	R	R
Present_Value	BACnetBinaryPV	INACTIVE (0) / ACTIVE (1)	W	W
Description	CharacterString	-	O	-
Status_Flags	BACnetStatusFlags	{FALSE, FALSE, FALSE, FALSE}	R	R
Event_State	BACnetEventState	STATE_NORMAL (0)	R	R
Reliability	BACnetReliability	NO_FAULT_DETECTED (0)	O	R
Out_Of_Service	BOOLEAN	FALSE	R	R
Inactive_Text	CharacterString	"Off"	O	R
Active_Text	CharacterString	“CurrentMode"	O	R
Change_Of_State_Time	BACnetDatetime	-	O	-
Change_Of_State_Count	Unsigned	-	O	-
Time_Of_State_Count_Reset	BACnetDatetime	-	O	-
Elapsed_Active_Time	Unsigned	-	O	-
Time_Of_Active_Time_Reset	BACnetDatetime	-	O	-
Minimum_Off_Time	Unsigned32	-	O	-
Minimum_On_Time	Unsigned32	-	O	-
Priority_Array	BACnetPriorityArray	BACnetPriorityArray	R	-
Relinquish_Default	BACnetBinaryPV	INACTIVE (0)	R	-
Time_Delay	Unsigned	-	O	-
Notification_Class	Unsigned	-	O	-
Alarm_Value	BACnetBinaryPV	-	O	-
Event_Enable	BACnetEventTransitionBits	-	O	-
Acked_Transitions	BACnetEventTransitionBits	-	O	-
Notify_Type	BACnetNotifyType	-	O	-
Event_Time_Stamps	BACnetArray[N] of BACnetTimeStamp	-	O	-
Profile_Name	CharacterString	-	O	-

© HMS Industrial Networks S.L.U - All rights reserved
This information is subject to change without notice

5.3.26 LockRemoteControl(Binary Value Object Type)

It indicates if control from the remote controller is locked or not.

Property Identifier	Property Datatype	Value	ASHRAE	IBOX
Object_Identifier	BACnetObjectIdentifier	(Binary Value, 2)	R	R
Object_Name	CharacterString	“LockRemoteControl”	R	R
Object_Type	BACnetObjectType	BINARY_VALUE (5)	R	R
Present_Value	BACnetBinaryPV	INACTIVE (0) / ACTIVE (1)	W	W
Description	CharacterString	-	O	-
Status_Flags	BACnetStatusFlags	{FALSE, FALSE, FALSE, FALSE}	R	R
Event_State	BACnetEventState	STATE_NORMAL (0)	R	R
Reliability	BACnetReliability	NO_FAULT_DETECTED (0)	O	R
Out_Of_Service	BOOLEAN	FALSE	R	R
Inactive_Text	CharacterString	"Locked"	O	R
Active_Text	CharacterString	“Unlocked"	O	R
Change_Of_State_Time	BACnetDatetime	-	O	-
Change_Of_State_Count	Unsigned	-	O	-
Time_Of_State_Count_Reset	BACnetDatetime	-	O	-
Elapsed_Active_Time	Unsigned	-	O	-
Time_Of_Active_Time_Reset	BACnetDatetime	-	O	-
Minimum_Off_Time	Unsigned32	-	O	-
Minimum_On_Time	Unsigned32	-	O	-
Priority_Array	BACnetPriorityArray	BACnetPriorityArray	R	-
Relinquish_Default	BACnetBinaryPV	INACTIVE (0)	R	-
Time_Delay	Unsigned	-	O	-
Notification_Class	Unsigned	-	O	-
Alarm_Value	BACnetBinaryPV	-	O	-
Event_Enable	BACnetEventTransitionBits	-	O	-
Acked_Transitions	BACnetEventTransitionBits	-	O	-
Notify_Type	BACnetNotifyType	-	O	-
Event_Time_Stamps	BACnetArray[N] of BACnetTimeStamp	-	O	-
Profile_Name	CharacterString	-	O	-

© HMS Industrial Networks S.L.U - All rights reserved
This information is subject to change without notice

5.3.27 Humidification_status (Multistate Input Object Type)

It indicates the status of the Left/Right vane for the corresponding indoor unit.

Property Identifier	Property Datatype	Value	ASHRAE	IBOX
Object_Identifier	BACnetObjectIdentifier	(Multi-state Input, 8)	R	R
Object_Name	CharacterString	"Humidification_status"	R	R
Object_Type	BACnetObjectType	MULTISTATE_INPUT(13)	R	R
Present_Value	Unsigned	1 ~ 5	R	R
Description	CharacterString	-	O	-
Device_Type	CharacterString	-	O	-
Status_Flags	BACnetStatusFlags	{FALSE, FALSE/TRUE, FALSE, FALSE}	R	R
Event_State	BACnetEventState	STATE_NORMAL (0)	R	R
Reliability	BACnetReliability	NO_FAULT_DETECTED (0), UNRELIABLE_OTHER (7)	O	R
Out_Of_Service	BOOLEAN	FALSE/TRUE	R	R
Number_Of_States	Unsigned	5	R	R
State_Text	BACnetArray[N] of CharacterString	*Check **Humidification Status table** below.*	O	R
Time_Delay	Unsigned	-	O	-
Notification_Class	Unsigned	-	O	-
Alarm_Values	List of Unsigned	-	O	-
Fault_Values	List of Unsigned	-	O	-
Event_Enable	BACnetEventTransitionBits	-	O	-
Acked_Transitions	BACnetEventTransitionBits	-	O	-
Notify_Type	BACnetNotifyType	-	O	-
Event_Time_Stamps	BACnetArray[N] of BACnetTimeStamp	-	O	-
Profile_Name	CharacterString	-	O	-

Humidification status table

EcoMode interpretation is possible using the value in the following correspondence table.

Pesent_Value	Contents displayed in State_Text
1	Off
2	Low
3	Mid
4	High
5	Continous

© HMS Industrial Networks S.L.U - All rights reserved
This information is subject to change without notice

5.3.28 Humidification_command (Multistate Output Object Type)

It allows control over the air direction for the corresponding indoor unit.

Property Identifier	Property Datatype	Value	ASHRAE	IBOX
Object_Identifier	BACnetObjectIdentifier	(Multi-state Output, 6)	R	R
Object_Name	CharacterString	“Humidification_command”	R	R
Object_Type	BACnetObjectType	MULTISTATE_OUTPUT (14)	R	R
Present_Value	Unsigned	1 ~ 5	W	W
Description	CharacterString	-	O	-
Device_Type	CharacterString	-	O	-
Status_Flags	BACnetStatusFlags	{FALSE, FALSE, FALSE, TRUE/FALSE}	R	R
Event_State	BACnetEventState	STATE_NORMAL (0)	R	R
Reliability	BACnetReliability	NO_FAULT_DETECTED (0)	O	R
Out_Of_Service	BOOLEAN	FALSE/TRUE	R	R
Number_Of_States	Unsigned	5	R	R
State_Text	BACnetArray[N] of CharacterString	*Check **Humidification Status table** below*	O	R
Priority_Array	BACnetPriorityArray	-	R	-
Relinquish_Default	Unsigned	-	R	-
Time_Delay	Unsigned	-	O	-
Notification_Class	Unsigned	-	O	-
Feedback_Value	Unsigned	-	O	-
Event_Enable	BACnetEventTransitionBits	-	O	-
Acked_Transitions	BACnetEventTransitionBits	-	O	-
Notify_Type	BACnetNotifyType	-	O	-
Event_Time_Stamps	BACnetArray[N] of BACnetTimeStamp	-	O	-
Profile_Name	CharacterString	-	O	-

Humidification status table

EcoMode interpretation is possible using the value in the following correspondence table.

Pesent_Value	Contents displayed in State_Text
1	Off
2	ECONAVI
3	AutoComfort

© HMS Industrial Networks S.L.U - All rights reserved
This information is subject to change without notice

5.3.29 OutdoorTemp_status (Analog Input Object Type)

It indicates the current outdoor temperature, obtained from the outdoor unit sensor.

Property Identifier	Property Datatype	Value	ASHRAE	IBOX
Object_Identifier	BACnetObjectIdentifier	(Analog Input, 8)	R	R
Object_Name	CharacterString	“OutdoorTemp_status”	R	R
Object_Type	BACnetObjectType	ANALOG_INPUT (0)	R	R
Present_Value	REAL	ºC // ºF	R	R
Description	CharacterString	-	O	-
Device_Type	CharacterString	-	O	-
Status_Flags	BACnetStatusFlags	{FALSE, FALSE/TRUE, FALSE, FALSE}	R	R
Event_State	BACnetEventState	STATE_NORMAL (0)	R	R
Reliability	BACnetReliability	NO_FAULT_DETECTED (0), UNRELIABLE_OTHER (7)	O	R
Out_Of_Service	BOOLEAN	FALSE/TRUE	R	R
Update_Interval	Unsigned	-	O	-
Units	BACnetEngineeringUnits	Degrees Celsius (62) Degrees Fahrenheit (64)	R	R
Min_Pres_Value	REAL	-	O	-
Max_Pres_Value	REAL	-	O	-
Resolution	REAL	-	O	-
COV_Increment	REAL	0	O	W
Time_Delay	Unsigned	-	O	-
Notification_Class	Unsigned	-	O	-
High_Limit	REAL	-	O	-
Low_Limit	REAL	-	O	-
Deadband	REAL	-	O	-
Limit_Enable	BACnetLimitEnable	-	O	-
Event_Enable	BACnetEventTransitionBits	-	O	-
Acked_Transitions	BACnetEventTransitionBits	-	O	-
Notify_Type	BACnetNotifyType	-	O	-
Event_Time_Stamps	BACnetArray[N] of BACnetTimeStamp	-	O	-
Profile_Name	CharacterString	-	O	-

© HMS Industrial Networks S.L.U - All rights reserved
This information is subject to change without notice

6 Connections and switches

6.1 *Connect to the AC indoor unit interface*

The interface comes with a cable (1,5 m / 4.9 ft long) for direct connection to the internal control board of the AC indoor unit.

Disconnect mains power from the AC unit. Open the front cover of the indoor unit in order to have access to the internal control board. In the control board locate the socket connector marked as **S21**.

Using the cable that comes with the interface, insert one of its connectors, the one installed in the shortest uncovered part, into the socket of the INBACDAI001I000 marked as **AC Unit**, and the other connector, the one in the largest uncovered part, into the socket **S21** of the AC unit's control board. Fix the INBACDAI001I000 outside the AC indoor; remember that INBACDAI001I000 must be also connected to the BACnet network. Close the AC indoor unit's front cover again.

⚠ ***Important***: Do not modify the length of the cable supplied with the interface, it may affect to the correct operation of the interface

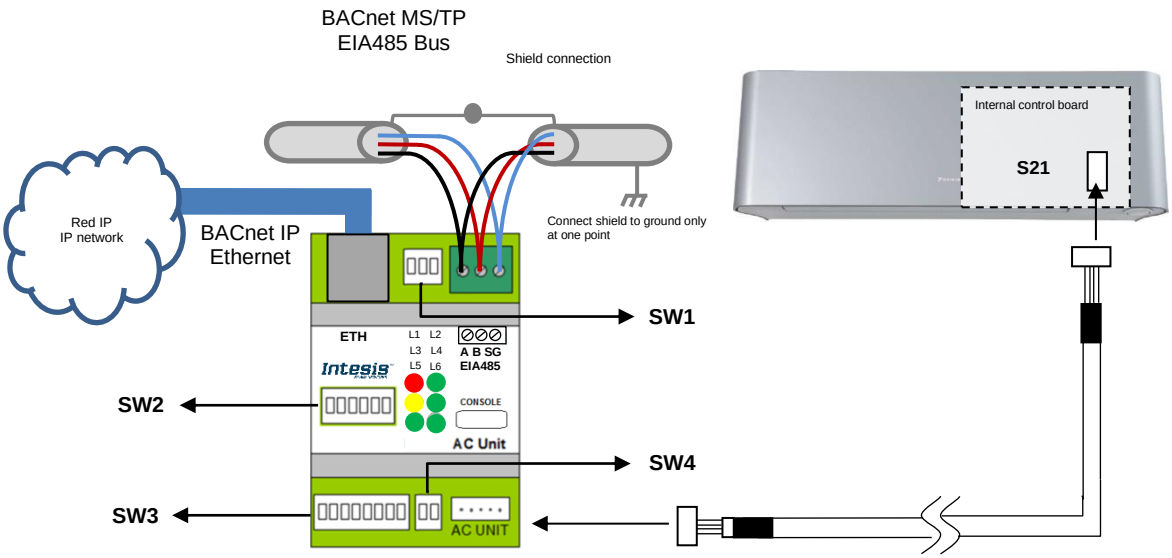

Figure 2.2 Connection diagram

Please, check the configuration for the AC unit to ensure proper control of the AC unit according to its specifications. Use **SW4** and **SW3** for that purpose.

SW3 - Celsius/Fahrenheit selection

Binary value $b_5 \ldots b_4$	Decimal value	Switches 1 2 3 4 5 6 7 8	Description
xxxx0xxx	0	x x x x ↓ x x x	Celsius degrees (default value)
xxxx1xxx	1	x x x x ↑ x x x	Fahrenheit degrees

SW4 – Fan/Vanes selection

Binary value $b_0 \ldots b_1$	Decimal value	*Switches* 1 2	MAC address
0x	0	↓ x	Fan mode not available
1x	1	↑ x	Fan mode available
x0	0	x ↓	Horizontal vanes not available
x1	1	x ↑	Horizontal vanes available

⚠ ***Important***: Remember that switch changes only apply after an Intesis power cycle

© HMS Industrial Networks S.L.U - All rights reserved
This information is subject to change without notice

6.2 *Connect to BACnet MS/TP*

Connect the EIA485 bus wires to the plug-in terminal block (EIA485) of INBACDAI001I000; respect the polarity on this connection (A+ and B-).

Connect the ground signal to the plug-in terminal block (SG).

Respect the maximum distance of 1.200 meters for the bus, no loop or star topologies are allowed for EIA485 bus.

EIA-485 bus. Termination resistors and Fail-Safe Biasing mechanism

The EIA-485 bus requires a 120Ω terminator resistor at each end of the bus to avoid signal reflections.

In order to prevent fail status detections by the receivers, which are *"listening"* to the bus, when all the transmitters' outputs are in three-state (high impedance), a fail-safe biasing mechanism is required. This mechanism provides a safe status (a correct voltage level) in the bus when all the transmitters' outputs are in three-state.

The INBACDAI001I000 gateway includes an on-board terminator resistor of 120Ω that can be connected to the EIA-485 bus by using DIP-switch SW1.

Some BACnet MS/TP EIA-485 Master devices can provide also internal 120Ω terminator resistor and/or fail-safe biasing. Check the technical documentation of the Master device connected to the EIA-485 network in each case.

SW1 Settings

Binary value $b_2 \ldots b_0$	Decimal value	Switches 1 2 3	Description
0xx	0	↓ x x	EIA485 bus without termination resistor. The gateway is not at one end of the EIA485 bus (default value)
1xx	1	↑ x x	120 Ω termination resistor active. The gateway is at one end of the EIA485 bus
x00	0	x ↓ ↓	No bus polarization
x11	3	x ↑ ↑	Bus polarization active

Please, check as well configuration on **SW2** and **SW3** before connecting to BACnet MS/TP.

6.2.1 MS/TP MAC address switch configuration

MAC address can be configured using **SW2** DIP-Switch

Binary value $b_0 \ldots b_7$	Decimal value	*Switches* 1	2	3	4	5	6	7	8	MAC address
0000000x	0	↓	↓	↓	↓	↓	↓	↓	x	0
1000000x	1	↑	↓	↓	↓	↓	↓	↓	x	1
0100000x	2	↓	↑	↓	↓	↓	↓	↓	x	2
1100000x	3	↑	↑	↓	↓	↓	↓	↓	x	3
….	….	….								…
1011111x	125	↑	↓	↑	↑	↑	↑	↑	x	125
0111111x	126	↓	↑	↑	↑	↑	↑	↑	x	126
1111111x	127	↑	↑	↑	↑	↑	↑	↑	x	127

The MAC address selected my affect on the Device Instance. If the "Auto Device Instance" is used, keep in mind that the Device Instance will be build using the "Device Instance Base" + the address selected in SWP2 P1-P7. Please, check section 7.4 for more information.

© HMS Industrial Networks S.L.U - All rights reserved
This information is subject to change without notice

6.2.2 MS/TP activation and baudrate

Select the right baudrate for BACnet MS/TP communication using switch **SW3**.

Binary value $b_5...b_4$	Decimal value	Switches 1 2 3 4 5 6 7 8	Description
0xxxxxxx	**0**	↓ x x x x x x x	BACnet MS/TP active (default value)
1xxxxxxx	**1**	↑ x x x x x x x	BACnet IP active
x000xxxx	**0**	x ↓ ↓ ↓ x x x x	Autobaudrate (default value) *
x100xxxx	**1**	x ↑ ↓ ↓ x x x x	9600 bps
x010xxxx	**2**	x ↓ ↑ ↓ x x x x	192000 bps
x110xxxx	**3**	x ↑ ↑ ↓ x x x x	38400 bps
x001xxxx	**4**	x ↓ ↓ ↑ x x x x	57600 bps
x101xxxx	**5**	x ↑ ↓ ↑ x x x x	76800 bps
x011xxxx	**6**	x ↓ ↑ ↑ x x x x	115200 bps
x111xxxx	**7**	x ↑ ↑ ↑ x x x x	Autobaudrate *
xxxx0xxx	**0**	x x x x ↓ x x x	Celsius degrees (default value)
xxxx1xxx	**1**	x x x x ↑ x x x	Fahrenheit degrees

⚠ ***Important***: Remember that switch changes only apply after an Intesis power cycle

* Note: If Autobaudrate is selected, the INBACDAI001I000 will look for another BACnet MS/TP device with a fixed baudrate in order to match this value. Once detected, the baudrate will not be modified until a device reset is produced.

6.3 *Connect to BACnet IP*

Connect the RJ45 connector to the Ethernet connection (ETH) of INBACDAI001I000.

Respect same recommendations as per any other Ethernet communication network.

Remember to activate the IP interface through the **SW3** switch.

Binary value $b_5...b_4$	Decimal value	Switches 1 2 3 4 5 6 7 8	Description
0xxxxxxx	**0**	↓ x x x x x x x	BACnet MS/TP active (default value)
1xxxxxxx	**1**	↑ x x x x x x x	BACnet IP active

By default, the INBACDAI001I000 comes with a static IP address: **192.168.100.246**.

In order to change it, please use the configuration tool and select either DHCP or another static IP (recommended) that suits your integration project requirements. Check section 7.4 for more information.

6.3.1 BACnet Device Instance

If the “Auto Device Instance” is used, keep in mind that the Device Instance will be build using the “Device Instance Base” + the address selected in SWP2 P1-P7.

Binary value $b_0...b_7$	Decimal value	*Switches* 1 2 3 4 5 6 7 8	MAC address
0000000x	0	↓ ↓ ↓ ↓ ↓ ↓ ↓ x	0
1000000x	1	↑ ↓ ↓ ↓ ↓ ↓ ↓ x	1
0100000x	2	↓ ↑ ↓ ↓ ↓ ↓ ↓ x	2
1100000x	3	↑ ↑ ↓ ↓ ↓ ↓ ↓ x	3
….	….	….	…
1011111x	125	↑ ↓ ↑ ↑ ↑ ↑ ↑ x	125
0111111x	126	↓ ↑ ↑ ↑ ↑ ↑ ↑ x	126
1111111x	127	↑ ↑ ↑ ↑ ↑ ↑ ↑ x	127

⚠ ***Important***: Remember that switch changes only apply after an Intesis power cycle

© HMS Industrial Networks S.L.U - All rights reserved
This information is subject to change without notice

7 Set-up process and troubleshooting

7.1 *Pre-requisites*

In a BACnet MS/TP integration, it is necessary to have the BACnet MS/TP Master device operative and well connected to the BACnet MS/TP port of the INBACDAI001I000.

In a BACnet IP integration, it is necessary to have the BACnet IP client operative and well connected to the IP network and the INBACDAI001I000 connected to this same IP network through the ETH port.

Items supplied by HMS Networks for this integration are:

- Intesis INBACDAI001I000 interface with Daikin AC external protocol firmware loaded.
- Specific connection cable to connect Daikin AC unit with INBACDAI001I000 gateway.
- MiniUSB cable for console communication.
- Product documentation.

7.2 *Physical checking*

First point to look at to make sure that gateway is working properly is to check physical connections:

1.- Make sure that the supplied cable is correctly connected between the AC unit and the gateway. INBACDAI001I000 needs to be connected to the AC unit or externaly powered before starting the device configuration. Contact Intesis if you need to power your device without connecting it to the AC unit.

2.- Check that the AC unit is connected to mains.

3.- If using BACnet MS/TP, check the EIA485 connection from the gateway to the BACnet MS/TP. Remember to verify polarity and terminal resistors configuration. If using BACnet IP, check the IP network connections.

7.3 *LED status*

On start up, all leds blink once and then turn off. After that, depending on the type of connection (MS/TP or IP) and the processes carried out, LED status may change.

Please, check the table below for more information:

LED	Status	Description
L1 (red)	ON Steady	AC communication error
	Blinking	AC error
	Off	No errors present
L5 (green)	ON Steady	BACnet MS/TP link
	Blinking	Activity on the BACnet MS/TP bus
L6 (green)	ON Steady	Ethernet link
	Blinking	Activity on BACnet IP
L1+L4+L5	Blinking	Device in Bootloader mode
All	Blinking	Fatal Error
All	On Steady 1 sec	On start up (for testing purposes)

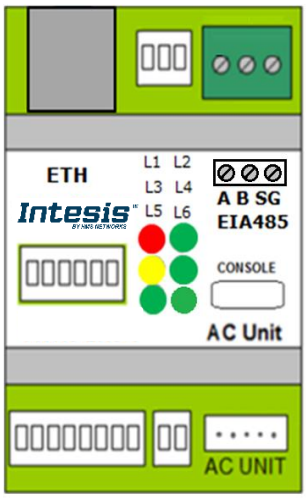

© HMS Industrial Networks S.L.U - All rights reserved
This information is subject to change without notice

7.4 *Occupancy*

Each indoor unit has its own occupancy signal. Remember that this signals needs to be feed by an external sensor which indicates if there is presense or not (occupancy). This signal is processed directly in the INBACDAI001I000.

When occupancy mode is active, according to current room temperature it will set the mode, setpoint and on/off, for example:

- Room Temperature > OCS: Setpoint = OCS, Mode = Cool, On/Off = On
- Room Temperature < OHS: Setpoint = OHS, Mode = Heat, On/Off = On
- OCS < Room Temperature > OHS: Setpoint = OCS/OHS depending on current mode (if Fan or Dry mode is active => no setpoint is sent), On/Off = On

When unoccupancy mode is active, according to current room temperature it will set the mode, setpoint and on/off, for example:

- Room Temperature > UCS: Setpoint = UCS, Mode = Cool, On/Off = On
- Room Temperature < UHS: Setpoint = UHS, Mode = Heat, On/Off = On
- UCS < Room Temperature > UHS: Setpoint = UCS/UHS depending on current mode (if Fan or Dry mode is active => no setpoint is sent), On/Off = On (if Unoccupancy Deadband Action is = 1)

These checks will be done each time the indoor unit occupancy status is changed, and if ***check continuously*** checkbox is checked, also each time the room temperature changes.

The configuration set on the occupany signals is applied from the very first moment the occupancy signal is enabled until the user changes the setpoint, mode or the On/Off signal, which disables occupancy functionality.

The minimum difference between Cool and Heat SetPoints must be 2ºC/4ºF.

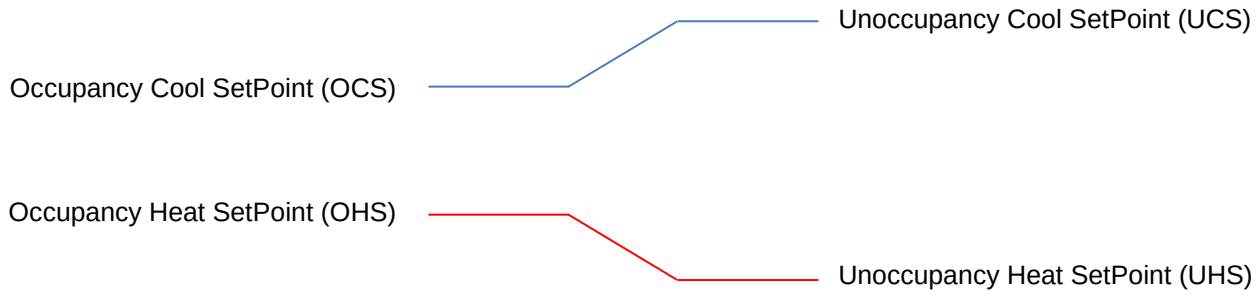

© HMS Industrial Networks S.L.U - All rights reserved
This information is subject to change without notice

7.5 *Configuration tool*

In order to check the status of the device, signals values and general configuration, the INBACDAI001I000 includes a configuration tool. This tool is accessible only through the Ethernet port, so keep in mind that you need to switch **SW3** P1 'ON'.

By default the device comes with a static IP, so please check that you are in the same network domain in order to connect. The default IP is: **192.168.100.246**.

7.5.1 Home

Once you reach the page, remember to login with your user and password. To access the login site, click on "User" or use the drop down menu on the top right corner for user selection.

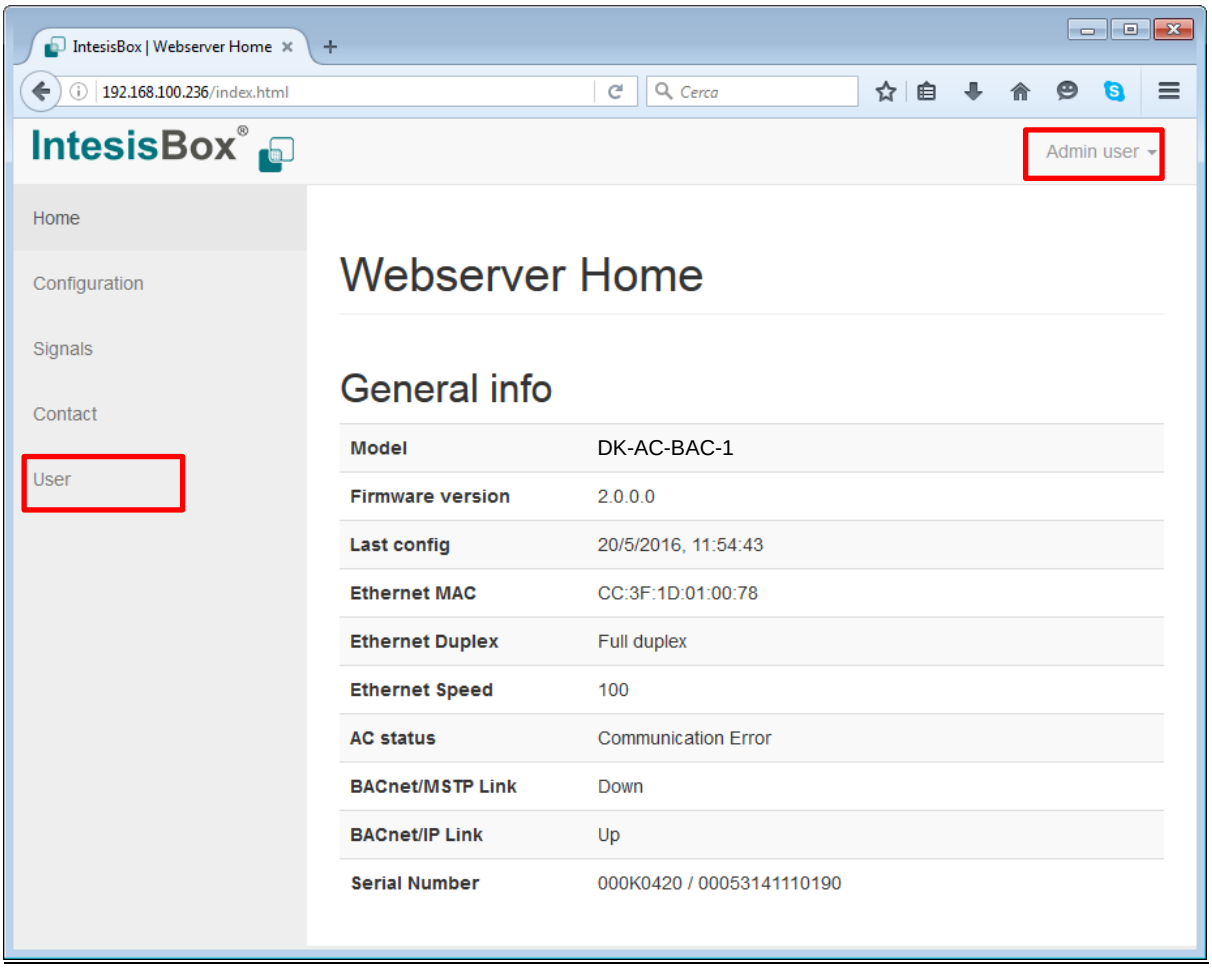

There are two access levels: ***admin*** and ***operator***. The default password value for each user is ***admin*** ➔ admin and ***operator*** ➔ operator.

Admin has total control on the device configuration and it can control the AC unit from the web app itself. On the contrary, operator can only read information from the current configuration and can operate the AC. Priority used when using the operator mode is always set to 8.

IMPORTANT: Once configuration is done, we recommend changing the passwords to ensure access control on the gateway.

© HMS Industrial Networks S.L.U - All rights reserved
This information is subject to change without notice

7.5.2 Configuration

On the configuration section, general **BACnet settings**, specific **BACnet MS/TP** and **BACnetIP settings**, **IP seetings** and **AC settings** can be configured. Each type of parameter is grouped in different blocks.

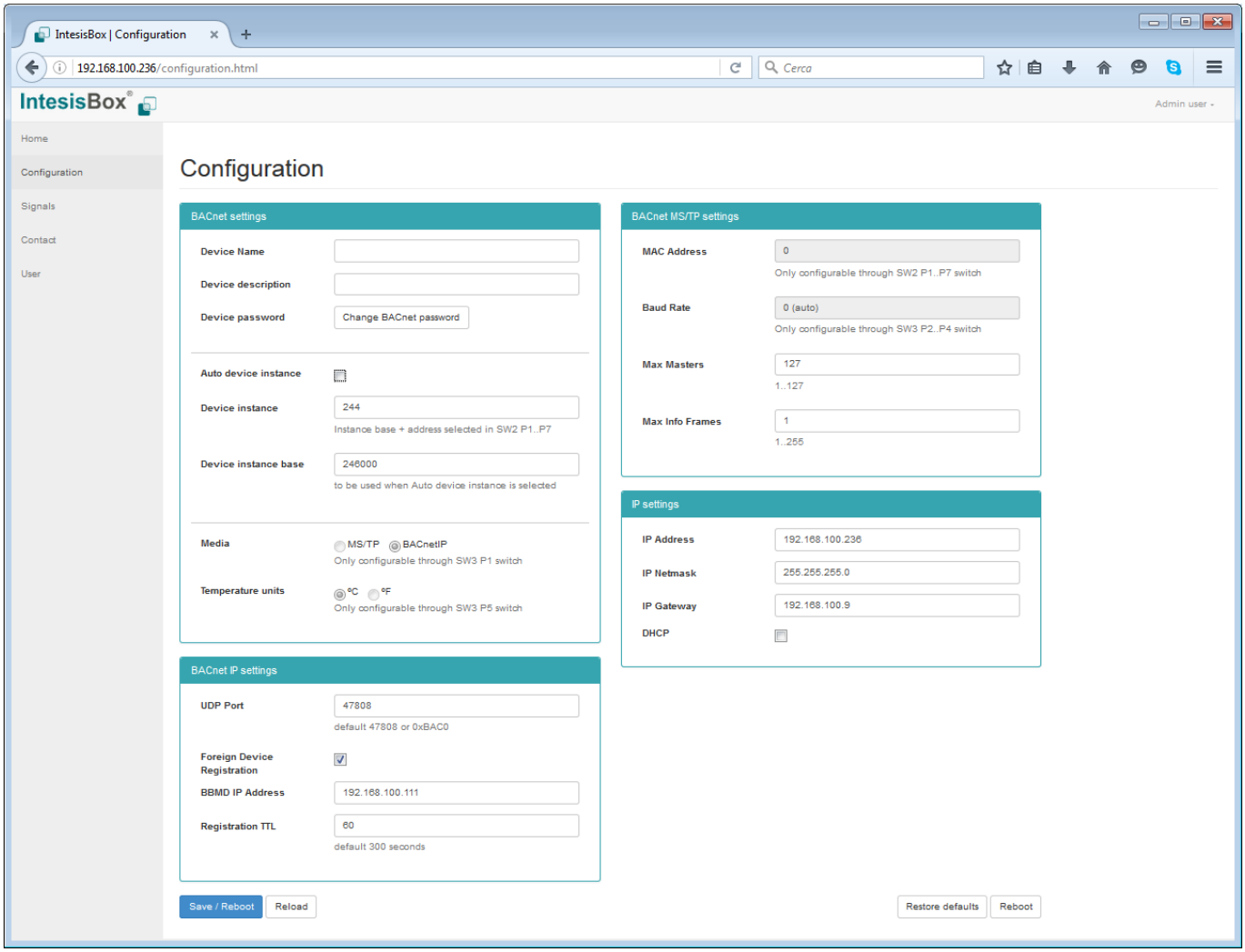

© HMS Industrial Networks S.L.U - All rights reserved
This information is subject to change without notice

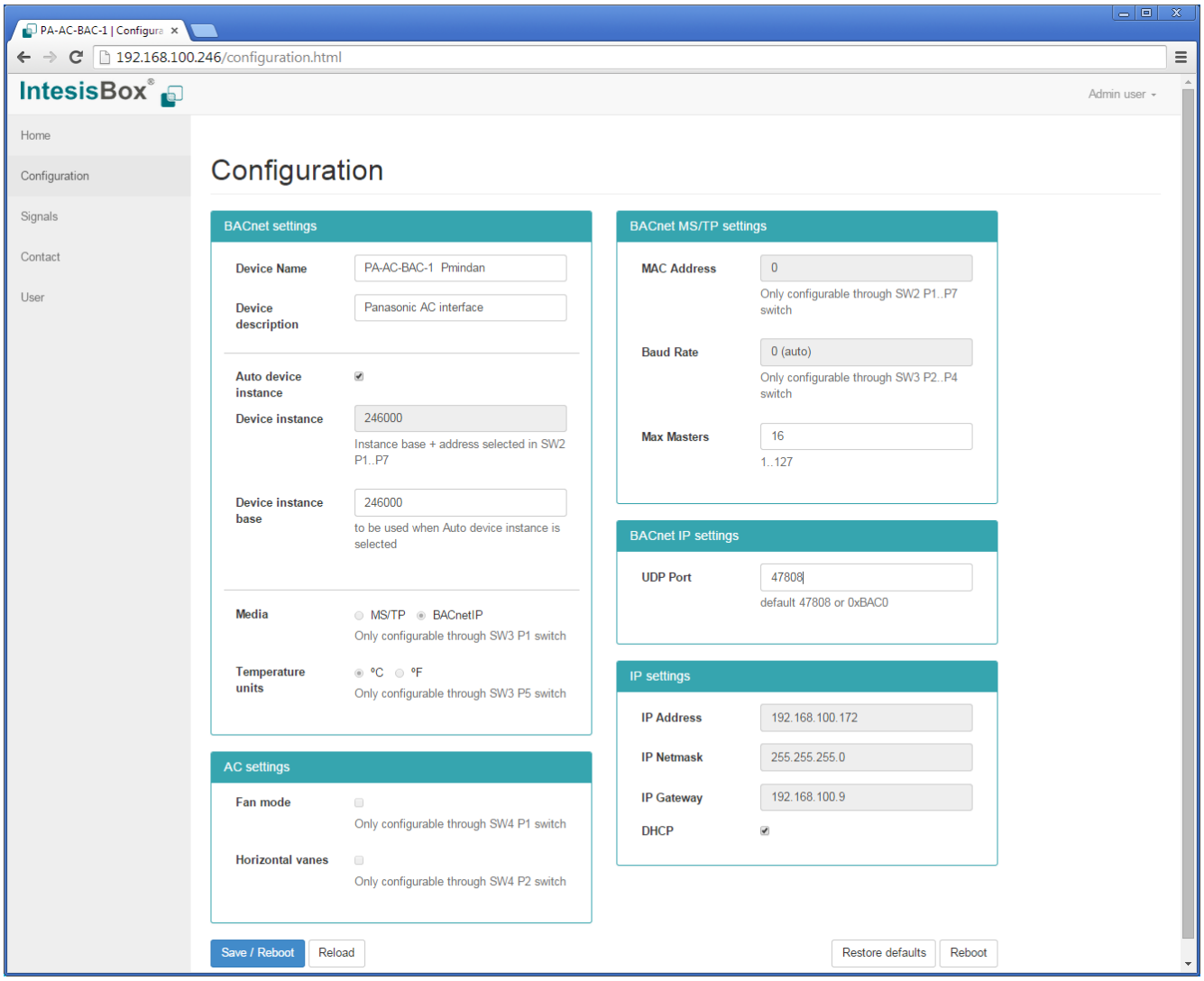

7.5.3 Signals

On this section a complete list of the available BACnet objects, their **type**, **Object Instance**, **priority** and current **value** is shown. Clinking on the "**Edit**" button, users will be able to command the system having feedback from both BACnet and AC system.

It also allows continuous monitoring of the current status of the variables. The refresh time for the AC information is shown using a progression bar in the top and the bottom of the signals list.

© HMS Industrial Networks S.L.U - All rights reserved
This information is subject to change without notice

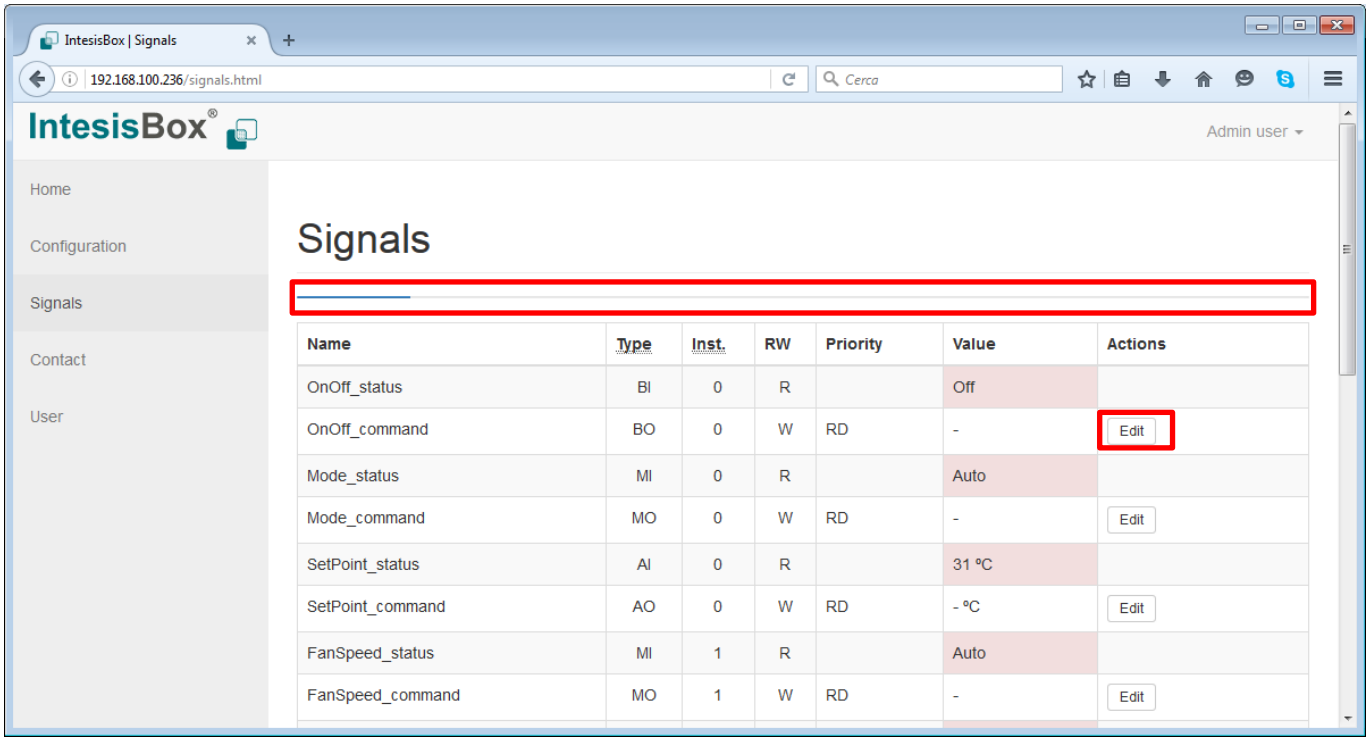

When you click on “Edit”, you will have the change of introducing a new **value** to be applied and also the **priority**.

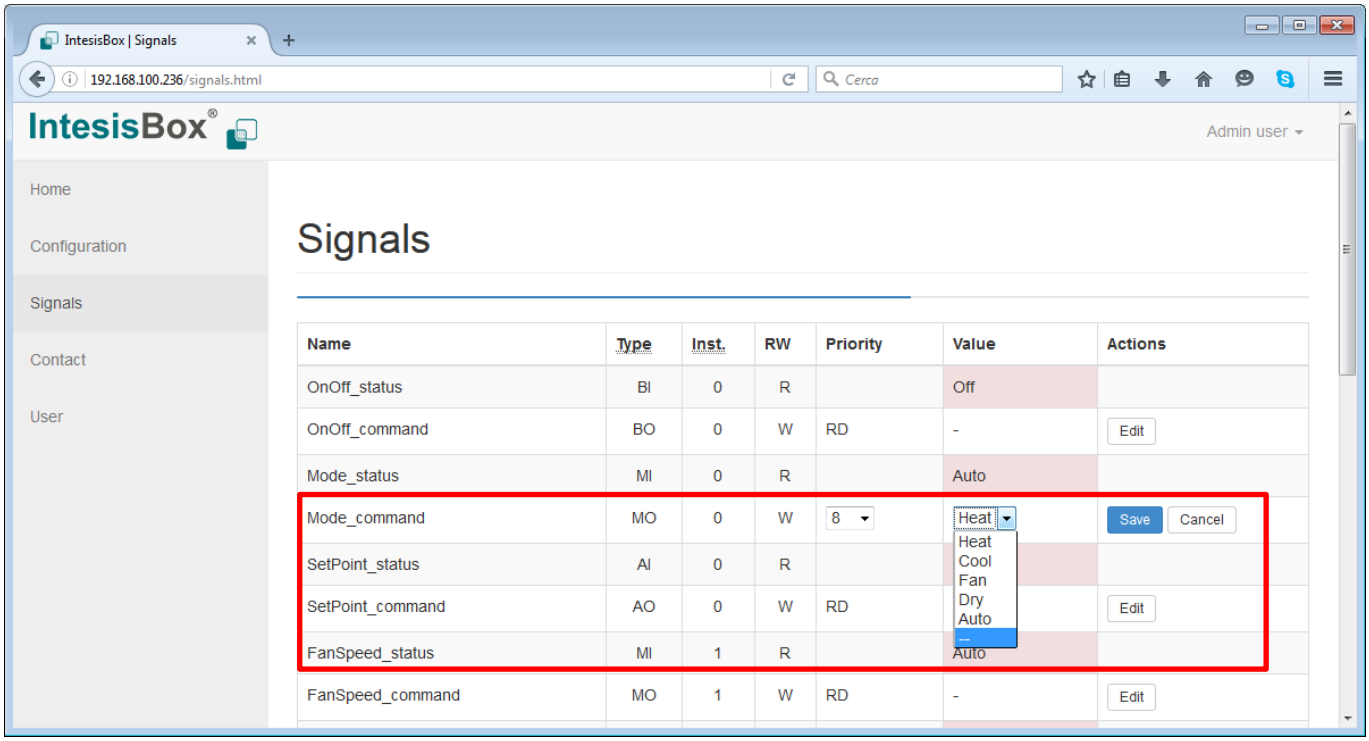

NOTE: If you want to relinquish the selected priority, please use the ‘--‘ command.

8 AC Unit Types compatibility

Please, check compatibility list at to know which Daikin units are compatible with our gateway.

© HMS Industrial Networks S.L.U - All rights reserved
This information is subject to change without notice

https://www.intesis.com/docs/compatibilities/inxxxdai001xx00_compatibility

9 Mechanical & electrical characteristics

Enclosure	Plastic, type PC (UL 94 V-0). Dimensions: 93mm x 53mm x 58mm. Weight: 85 g
Color	Light Grey. RAL 7035.
Terminal wiring (for power supply and low-voltage signals)	Per terminal: solid wires or stranded wires (twisted or with ferrule) 1 core: 0.5 … 2.5mm^2 2 cores: 0.5 … 1.5mm^2 3 cores: not permitted
Console Port	Mini USB port for console usage
Mounting	Wall. DIN rail EN60715 TH35.
BACnet MS/TP port	1 x EIA485 Plug-in screw terminal block (2 poles + GND)
BACnet IP port	1 x Ethernet 100BT RJ45.
LED indicators	6 x Gateway/Communication status
Operational temperature	0°C to +40°C
Operational humidity	5% to 95%, non-condensing
Isolation Voltage	*4000 VDC (between AC unit and EIA-485)* *1000 VDC (between AC unit and USB)*
Protection	IP20 (IEC60529).
RoHS conformity	Compliant with RoHS directive (2002/95/CE).
Certifications	CE conformity to EMC directive (2004/108/EC) and Low-voltage directive (2006/95/EC) EN 61000-6-1 ;EN 61000-6-3; EN 60950-1; EN 50491-3 This device complies with part 15 of the FCC Rules. Operation is subject to the following two conditions: 1) This device may not cause harmful interference 2) This device must accept any interference received, including interference that may cause undesired operation.

10 Dimensions

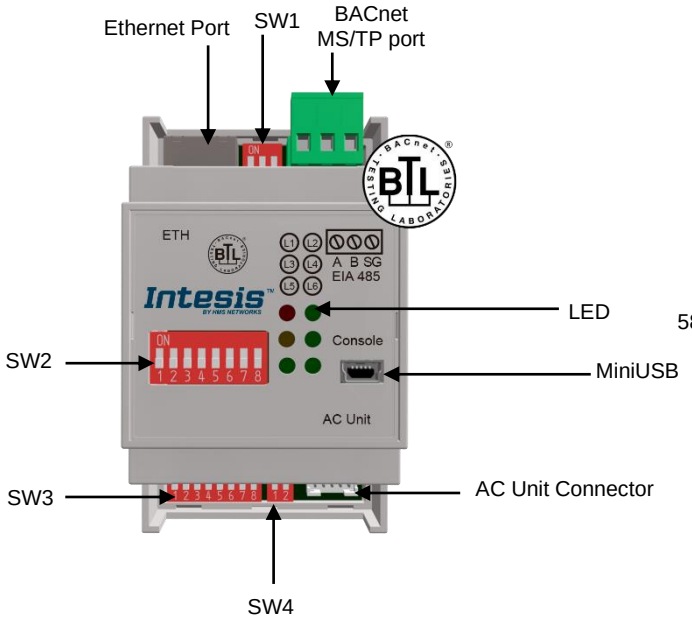

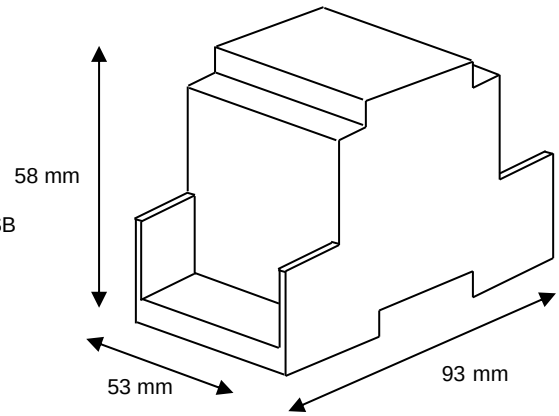

© HMS Industrial Networks S.L.U - All rights reserved
This information is subject to change without notice

11 Error codes

Below you can find a list of error codes from Daikin air conditioning system.

Error Code	Error CodeM	Error in Remote Controller	Error Category	Error Description
-1	ComError	N/A	Indoor Unit	Communication Error between AC unit and INBACDAI001I000
17	A0	A0		External protection devices activated
18	A1	A1		Indoor unit PCB assembly failure
19	A2	A2		Interlock error for fan
20	A3	A3		Drain level system error
21	A4	A4		Temperature of heat exchanger (1) error
22	A5	A5		Temperature of heat exchanger (2) error
23	A6	A6		Fan motor locked, overload, over current
24	A7	A7		Swing flap motor error
25	A8	A8		Overcurrent of AC input
26	A9	A9		Electronic expansion valve drive error
27	AA	AA		Heater overheat
28	AH	AH		Dust collector error / No-maintenance filter error
30	AJ	AJ		Capacity setting error (indoor)
31	AE	AE		Shortage of water supply
32	AF	AF		Malfunctions of a humidifier system (water leaking)
33	C0	C0		Malfunctions in a sensor system
36	C3	C3		Sensor system of drain water error
37	C4	C4		Heat exchanger (1) (Liquid pipe) thermistor system error
38	C5	C5		Heat exchanger (1) (Gas pipe) thermistor system error
39	C6	C6		Sensor system error of fan motor locked, overload
40	C7	C7		Sensor system of swing flag motor error
41	C8	C8		Sensor system of over-current of AC input
42	C9	C9		Suction air thermistor error
43	CA	CA		Discharge air thermistor system error
44	CH	CH		Contamination sensor error
45	CC	CC		Humidity sensor error
46	CJ	CJ		Remote control thermistor error
47	CE	CE		Radiation sensor error
48	CF	CF		High pressure switch sensor
49	E0	E0	Outdoor Unit	Protection devices activated
50	E1	E1		Outdoor uni9t PCB assembly failure
52	E3	E3		High pressure switch (HPS) activated
53	E4	E4		Low pressure switch (LPS) activated
54	E5	E5		Overload of inverter compressor motor
55	E6	E6		Over current of STD compressor motor
56	E7	E7		Overload of fan motor / Over current of fan motor
57	E8	E8		Over current of AC input
58	E9	E9		Electronic expansion valve drive error
59	EA	EA		Four-way valve error
60	EH	EH		Pump motor over current
61	EC	EC		Water temperature abnormal
62	EJ	EJ		(Site installed) Protection device activated

© HMS Industrial Networks S.L.U - All rights reserved
This information is subject to change without notice

63	EE	EE	Malfunctions in a drain water
64	EF	EF	Ice thermal storage unit error
65	H0	H0	Malfunctions in a sensor system
66	H1	H1	Air temperature thermistor error
67	H2	H2	Sensor system of power supply error
68	H3	H3	High Pressure switch is faulty
69	H4	H4	Low pressure switch is faulty
70	H5	H5	Compressor motor overload sensor is abnormal
71	H6	H6	Compressor motor over current sensor is abnormal
72	H7	H7	Overload or over current sensor of fan motor is abnormal
73	H8	H8	Sensor system of over-current of AC input
74	H9	H9	Outdoor air thermistor system error
75	HA	HA	Discharge air thermistor system error
76	HH	HH	Pump motor sensor system of over current is abnormal
77	HC	HC	Water temperature sensor system error
79	HE	HE	Sensor system of drain water is abnormal
80	HF	HF	Ice thermal storage unit error (alarm)
81	F0	F0	No.1 and No.2 common protection device operates.
82	F1	F1	No.1 protection device operates.
83	F2	F2	No.2 protection device operates
84	F3	F3	Discharge pipe temperature is abnormal
87	F6	F6	Temperature of heat exchanger(1) abnormal
91	FA	FA	Discharge pressure abnormal
92	FH	FH	Oil temperature is abnormally high
93	FC	FC	Suction pressure abnormal
95	FE	FE	Oil pressure abnormal
96	FF	FF	Oil level abnormal
97	J0	J0	Sensor system error of refrigerant temperature
98	J1	J1	Pressure sensor error
99	J2	J2	Current sensor error
100	J3	J3	Discharge pipe thermistor system error
101	J4	J4	Low pressure equivalent saturated temperature sensor system error
102	J5	J5	Suction pipe thermistor system error
103	J6	J6	Heat exchanger(1) thermistor system error
104	J7	J7	Heat exchanger(2) thermistor system error
105	J8	J8	Oil equalizer pipe or liquid pipe thermistor system error
106	J9	J9	Double tube heat exchanger outlet or gas pipe thermistor system error
107	JA	JA	Discharge pipe pressure sensor error
108	JH	JH	Oil temperature sensor error
109	JC	JC	Suction pipe pressure sensor error
111	JE	JE	Oil pressure sensor error
112	JF	JF	Oil level sensor error
113	L0	L0	Inverter system error
116	L3	L3	Temperature rise in a switch box
117	L4	L4	Radiation fin (power transistor) temperature is too high
118	L5	L5	Compressor motor grounded or short circuit, inverter PCB fault
119	L6	L6	Compressor motor grounded or short circuit, inverter PCB fault
120	L7	L7	Over current of all inputs

© HMS Industrial Networks S.L.U - All rights reserved
This information is subject to change without notice

121	L8	L8		Compressor over current, compressor motor wire cut
122	L9	L9		Stall prevention error (start-up error) Compressor locked, etc.
123	LA	LA		Power transistor error
125	LC	LC		Communication error between inverter and outdoor control unit
129	P0	P0		Shortage of refrigerant (thermal storage unit)
130	P1	P1		Power voltage imbalance, open phase
132	P3	P3		Sensor error of temperature rise in a switch box
133	P4	P4		Radiation fin temperature sensor error
134	P5	P5		DC current sensor system error
135	P6	P6		AC or DC output current sensor system error
136	P7	P7		Total input current sensor error
142	PJ	PJ		Capacity setting error (outdoor)
145	U0	U0	System	Low pressure drop due to insufficient refrigerant or electronic expansion valve error, etc.
146	U1	U1		Reverse phase, Open phase
147	U2	U2		Power voltage failure / Instantaneous power failure
148	U3	U3		Failure to carry out check operation, transmission error
149	U4	U4		Communication error between indoor unit and outdoor unit, communication error between outdoor unit and BS unit
150	U5	U5		Communication error between remote control and indoor unit / Remote control board failure or setting error for remote control
151	U6	U6		Communication error between indoor units
152	U7	U7		Communication error between outdoor units / Communication error between outdoor unit and ice thermal storage unit
153	U8	U8		Communication error between main and sub remote controllers (sub remote control error) / Combination error of other indoor unit / remote control in the same system (model)
154	U9	U9		Communication error between other indoor unit and outdoor unit in the same system / Communication error between other BS unit and indoor/outdoor unit
155	UA	UA		Combination error of indoor/BS/outdoor unit (model, quantity, etc.), setting error of spare parts PCB when replaced
156	UH	UH		Improper connection of transmission wiring between outdoor and outdoor unit outside control adaptor
157	UC	UC		Centralized address duplicated
158	UJ	UJ		Attached equipment transmission error
159	UE	UE		Communication error between indoor unit and centralized control device
160	UF	UF		Failure to carrey out check operation Indoor-outdoor, outdoor-outdoor communication error, etc.
209	60	60	Others	All system error
210	61	61		PC board error
211	62	62		Ozone density abnormal
212	63	63		Contamination sensor error
213	64	64		Indoor air thermistor system error
214	65	65		Outdoor air thermistor system error
217	68	68		HVU error (Ventiair dust-collecting unit)
219	6A	6A		Dumper system error
220	6H	6H		Door switch error
221	6C	6C		Replace the humidity element
222	6J	6J		Replace the high efficiency filter
223	6E	6E		Replace the deodorization catalyst
224	6F	6F		Simplified remote controller error
226	51	51		Fan motor of supply air over current or overload
227	52	52		Fan motor of return air over current / Fan motor of return air overload

© HMS Industrial Networks S.L.U - All rights reserved
This information is subject to change without notice

228	53	53		Inverter system error (supply air side)
229	54	54		Inverter system error (return air side)
241	40	40		Humidifying valve error
242	41	41		Chilled water valve error
243	42	42		Hot water valve error
244	43	43		Heat exchanger of chilled water error
245	44	44		Heat exchanger of hot water error
258	31	31		The humidity sensor of return air sensor
259	32	32		Outdoor air humidity sensor error
260	33	33		Supply air temperature sensor error
261	34	34		Return air temperature sensor error
262	35	35		Outdoor air temperature sensor error
263	36	36		Remote controller temperature sensor error
267	3A	3A		Water leakage sensor 1 error
268	3H	3H		Water leakage sensor 2 error
269	3C	3C		Dew condensation error
339	M2	M2		Centralized remote controller PCB error
345	M8	M8		Communication error between centralized remote control devices
347	MA	MA		Centralized remote control devices inappropriate combination
349	MC	MC		Centralized remote controller address setting error

In case you detect an error code not listed, contact your nearest Daikin technical support service for more information on the error meaning.

© HMS Industrial Networks S.L.U - All rights reserved
This information is subject to change without notice