BACnet MS/TP Server & BACnet IP Server

Daikin Air Conditioning

Compatible with SKY & VRV air conditioner lines commercialized by Daikin

USER MANUAL

Issue date: 09/2024 v1.8 ENGLISH

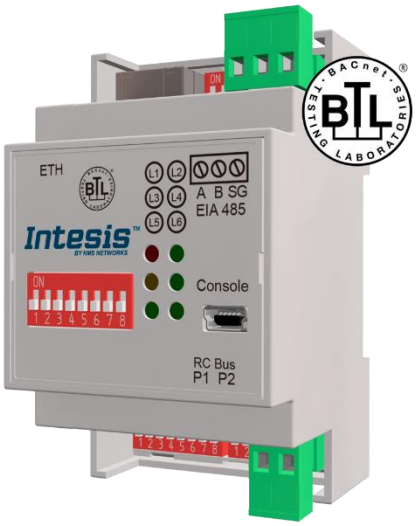

14 rue Edouard Petit
42000 St-Etienne

Tel : +33 477 92 03 56
Email : contact@rg2i.com
www.rg2i.com

Important User Information

Disclaimer

The information in this document is for informational purposes only. Please inform HMS Industrial Networks of any inaccuracies or omissions found in this document. HMS Industrial Networks disclaims any responsibility or liability for any errors that may appear in this document.

HMS Industrial Networks reserves the right to modify its products in line with its policy of continuous product development. The information in this document shall therefore not be construed as a commitment on the part of HMS Industrial Networks and is subject to change without notice. HMS Industrial Networks makes no commitment to update or keep current the information in this document.

The data, examples and illustrations found in this document are included for illustrative purposes and are only intended to help improve understanding of the functionality and handling of the product. In view of the wide range of possible applications of the product, and because of the many variables and requirements associated with any particular implementation, HMS Industrial Networks cannot assume responsibility or liability for actual use based on the data, examples or illustrations included in this document nor for any damages incurred during installation of the product. Those responsible for the use of the product must acquire sufficient knowledge in order to ensure that the product is used correctly in their specific application and that the application meets all performance and safety requirements including any applicable laws, regulations, codes and standards. Further, HMS Industrial Networks will under no circumstances assume liability or responsibility for any problems that may arise as a result from the use of undocumented features or functional side effects found outside the documented scope of the product. The effects caused by any direct or indirect use of such aspects of the product are undefined and may include e.g. compatibility issues and stability issues.

© HMS Industrial Networks S.L.U - All rights reserved
This information is subject to change without notice

Gateway for the integration of Daikin air conditioning units in BACnet enabled monitoring and control systems.

Compatible with SKY & VRV air conditioner lines commercialized by Daikin.

ORDER CODE	LEGACY ORDER CODE
INBACDAI001R000	DK-RC-BAC-1

© HMS Industrial Networks S.L.U - All rights reserved
This information is subject to change without notice

INDEX

1 Description 6
1.1 Introduction 6
1.2 Functionality 7
1.3 Capacity of Intesis 7
1.4 Quick Setup 7
2 Protocol Implementation Conformance Statement 8
2.1 BACnet Standardized Device Profile (Annex L): 8
2.2 Segmentation Capability: 8
2.3 Data Link Layer Options: 8
2.4 Device Address Binding: 9
2.5 Networking Options: 9
2.6 Character Sets Supported 9
2.7 Gateway 9
3 BACnet Interoperability Building Blocks Supported (BIBBs) 10
3.1 Data Sharing BIBBs 10
3.2 Alarm and Event Management BIBBs 10
3.3 Scheduling BIBBs 11
3.4 Trending BIBBs 11
3.5 Network Management BIBBs 11
3.6 Device Management BIBBs 12
4 Service Types 13
5 Objects 14
5.1 Supported Object Types 14
5.2 Member objects 15
5.2.1 Type: Gateway 15
5.2.2 Type: Indoor Unit 15
5.3 Objects and properties 16
5.3.1 Daikin AC Gateway (Device Object Type) 16
5.3.2 OnOff_status (Binary Input Object Type) 18
5.3.3 OnOff_command (Binary Output Object Type) 19
5.3.4 Mode_status (Multistate Input Object Type) 20
5.3.5 Mode_command (Multistate Output Object Type) 21
5.3.6 Setpoint_status (Analog Input Object Type) 22
5.3.7 Setpoint_command (Analog Output Object Type) 23
5.3.8 FanSpeed_status (Multistate Input Object Type) 24
5.3.9 FanSpeed_command (Multistate Output Object Type) 25
5.3.10 AirDirectionUD_status (Multistate Input Object Type) 26
5.3.11 AirDirectionUD_command (Multistate Output Object Type) 27

© HMS Industrial Networks S.L.U - All rights reserved
This information is subject to change without notice

5.3.12 RoomTemperature_status (Analog Input Object Type) ... 28
5.3.13 RoomTemperature_command (Analog Output Object Type) ... 29
5.3.14 ErrorCode (Analog Input Object Type) ... 30
5.3.15 ErrorCodeM (Multistate Input Object Type) ... 31
5.3.16 ErrorActive (Binary Input Object Type) ... 33
5.3.17 ErrorAddress (Analog Input Object Type) ... 34
5.3.18 OnTimeCounter (Analog Value Object Type) ... 35
5.3.19 Occupancy (Multistate Value Object Type) ... 36
5.3.20 OccupiedCoolSetPoint (Analog Value Object Type) ... 37
5.3.21 OccupiedHeatSetPoint (Analog Value Object Type) ... 38
5.3.22 UnoccupiedCoolSetPoint (Analog Value Object Type) ... 39
5.3.23 UnoccupiedHeatSetPoint (Analog Value Object Type) ... 40
5.3.24 OccupancyContinuousCheck (Binary Value Object Type) ... 41
5.3.25 UnoccupiedDeadbandAction (Binary Value Object Type) ... 42
5.3.26 LockRemoteControl (Binary Value Object Type) ... 43
5.3.27 ThermostatON (Binary Input Object Type) ... 44
6 Connections and switches ... 45
6.1 Connect to the Remote Controller bus ... 45
6.2 Connect to BACnet MS/TP ... 47
6.2.1 MS/TP MAC address switch configuration ... 47
6.2.2 MS/TP activation and baudrate ... 48
6.3 Connect to BACnet IP ... 48
6.3.1 BACnet Device Instance ... 48
7 Set-up process and troubleshooting ... 48
7.1 Pre-requisites ... 49
7.2 Physical checking ... 49
7.3 LED status ... 49
7.4 Room temperature ... 50
7.5 Occupancy ... 51
7.6 Configuration tool ... 53
7.6.1 Home ... 53
7.6.2 Configuration ... 54
7.6.3 Signals ... 55
8 AC Unit Types compatibility ... 56
9 Mechanical & electrical characteristics ... 57
10 Dimensions ... 57
11 Error codes ... 58

© HMS Industrial Networks S.L.U - All rights reserved
This information is subject to change without notice

1 Description

1.1 *Introduction*

This document describes the integration of Daikin air conditioning systems into BACnet compatible devices and systems using the *INBACDAI001R000* gateway.

The aim of this integration is to monitor and control your Daikin air conditioning system, remotely, from your Control Center using any commercial SCADA or monitoring software that includes a BACnet driver or connect it to other BACnet devices to do any automation. To do it so, Intesis allows BACnet communication allowing polling or subscription requests (COV).

Intesis makes available the Daikin air conditioning system indoor units through independent BACnet objects.

Abstraction of Daikin air conditioning system properties and functionalities as fixed BACnet Objects. Intesis allows fixed BACnet object IDs mapping. Simple configuration is needed: just select the appropriate communication parameters (MAC address, baud rate…).

This document assumes that the user is familiar with BACnet and Daikin technologies and their technical terms.

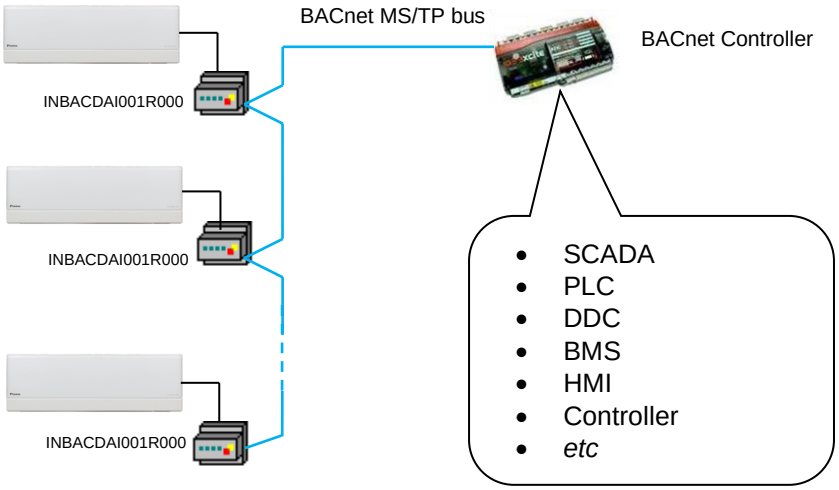

BACnet MS/TP installation sketch

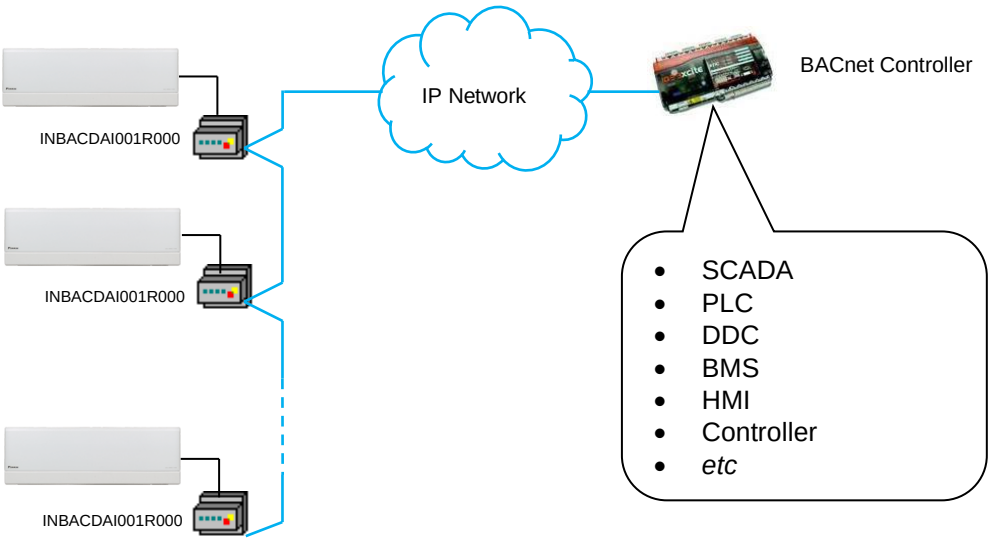

BACnet IP installation sketch

© HMS Industrial Networks S.L.U - All rights reserved
This information is subject to change without notice

1.2 *Functionality*

Intesis continuously reads the Daikin AC system and keeps the updated status of all objects in its memory, ready to be served when requested from the BACnet side.

The role of Intesis consists in associate the elements of the Daikin AC system with BACnet objects.

The control of the indoor units through the INBACDAI001R000 is permitted, so commands towards the Daikin AC units are permitted too.

The indoor unit is offered in a set of BACnet objects and extra functionalities.

1.3 *Capacity of Intesis*

Intesis is capable of integrating one or more Daikin AC units and its associated elements.

Element	Max.	Notes
Number of indoor units	1*	Number of indoor units that can be controlled through Intesis
Number of Objects	32	Number of Daikin AC signals available as objects into Intesis.

* **NOTE**: Keep in mind that more than one unit can be connected to the same INBACDAI001R000 gateway. You can control then more than one AC unit, but it will be actuated as a single unit. Different commands to different AC units connected to the same INBACDAI001R000 will not be allowed.

1.4 *Quick Setup*

1. Install Intesis in the desired installation site (DIN rail mounting inside a metallic industrial cabinet connected to ground is recommended).
2. Connect the communication cables. Details in section 5.3.26.
3. Connect to the Intesis. Details in section 7.6.
4. (Optional) Configure the Intesis using the configuration tool. Details in section 7.6.2.
5. Check the BACnet objects list for its integration to your BACnet project. Details in section 5.2.
6. Check if there is communication between BACnet and AC system. Details in section 7.6.3.
7. The Intesis is ready to be used in your system.

© HMS Industrial Networks S.L.U - All rights reserved
This information is subject to change without notice

2 Protocol Implementation Conformance Statement

BACnet Protocol Implementation Conformance Statement (PICS)

Date: *2014-12-05*
Vendor Name: *HMS Industrial Networks S.L.U*
Product Name: *INBACDAI001R000*
Product Model Number: *INBACDAI001R000*
Application Software Version: *1.0*
Firmware Revision: *1.0.0.0*
BACnet Protocol Revision: *12*

Product Description:

Daikin air conditioning system – BACnet MS/TP & BACnet IP Gateway

Abstraction of Daikin air conditioning system properties and functionalities as BACnet Objects.

2.1 *BACnet Standardized Device Profile (Annex L):*

☐ BACnet Operator Workstation (B-OWS)

☐ BACnet Building Controller (B-BC)

☐ BACnet Advanced Application Controller (B-AAC)

☒ BACnet Application Specific Controller (B-ASC)

☐ BACnet Smart Sensor (B-SS)

☐ BACnet Smart Actuator (B-SA)

Additional BACnet Interoperability Building Blocks Supported (Annex K):
Reference of BIBBs List

2.2 *Segmentation Capability:*

Segmented request supported	☐ No	☒ Yes	Window Size *16*
Segmented responses supported	☐ No	☒ Yes	Window Size *16*

2.3 *Data Link Layer Options:*

☒ BACnet IP, (Annex J)
☒ BACnet IP, (Annex J), Foreign Device
☐ ISO 8802-3, Ethernet (Clause 7)
☐ ANSI/ATA 878.1, 2.5 Mb. ARCNET (Clause 8)
☐ ANSI/ATA 878.1, RS-485 ARCNET (Clause 8), baud rate(s) ____
☒ MS/TP master (Clause 9), baud rate(s): 9600, 19200, 38400, 76800
☐ MS/TP slave (Clause 9), baud rate(s):
☐ Point-To-Point, EIA 232 (Clause 10), baud rate(s):
☐ Point-To-Point, modem, (Clause 10), baud rate(s):
☐ LonTalk, (Clause 11), medium: _____
☐ Other:

© HMS Industrial Networks S.L.U - All rights reserved
This information is subject to change without notice

2.4 *Device Address Binding:*

Is static device binding supported? (This is currently necessary for two-way communication with MS/TP slaves and certain other devices.) ☐ Yes ☒ No

2.5 *Networking Options:*

☐ Router, Clause 6 - List all routing configurations, e.g., ARCNET-Ethernet, Ethernet-MS/TP, etc.
☐ Annex H, BACnet Tunneling Router over IP
☐ BACnet/IP Broadcast Management Device (BBMD)
Does the BBMD support registrations by Foreign Devices? ☐ Yes ☐ No

2.6 *Character Sets Supported*

Indicating support for multiple character sets does not imply that they can all be supported simultaneously.

☒ ANSI X3.4
☐ IBM™/Microsoft™ DBCS
☐ JIS C 6226
☐ ISO 10646 (UCS-4)
☐ ISO 10646 (UCS-2)
☐ ISO 8859-1

2.7 *Gateway*

If this product is a communication gateway, describe the types of non-BACnet equipment/network(s) that the gateway supports:

Daikin Air Conditioning Units compatible with SKY & VRV air conditioner lines.

© HMS Industrial Networks S.L.U - All rights reserved
This information is subject to change without notice

3 BACnet Interoperability Building Blocks Supported (BIBBs)

3.1 *Data Sharing BIBBs*

BIBB Type		Active	BACnet Service	Initiate	Execute
DS-RP-A	Data Sharing-ReadProperty–A	☐	ReadProperty	☒	☐
DS-RP-B	Data Sharing-ReadProperty–B	☒	ReadProperty	☐	☒
DS-RPM-A	Data Sharing-ReadPropertyMultiple–A	☐	ReadPropertyMultiple	☒	☐
DS-RPM-B	Data Sharing-ReadPropertyMultiple–B	☒	ReadPropertyMultiple	☐	☒
DS-RPC-A	Data Sharing-ReadPropertyConditiona–A	☐	ReadPropertyConditional	☒	☐
DS-RPC-B	Data Sharing-ReadPropertyConditional–B	☐	ReadPropertyConditional	☐	☒
DS-WP-A	Data Sharing-WriteProperty–A	☐	WriteProperty	☒	☐
DS-WP-B	Data Sharing-WriteProperty–B	☒	WriteProperty	☐	☒
DS-WPM-A	Data Sharing-WritePropertyMultiple–A	☐	WritePropertyMultiple	☒	☐
DS-WPM-B	Data Sharing-WritePropertyMultiple–B	☒	WritePropertyMultiple	☐	☒
DS-COV-A	Data Sharing-COV–A	☐	SubscribeCOV	☒	☐
		☐	ConfirmedCOVNotification	☐	☒
		☐	UnconfirmedCOVNotification	☐	☒
DS-COV-B	Data Sharing-COV–B	☒	SubscribeCOV	☐	☒
		☒	ConfirmedCOVNotification	☒	☐
		☒	UnconfirmedCOVNotification	☒	☐
DS-COVP-A	Data Sharing-COVP–A	☐	SubscribeCOV	☒	☐
		☐	ConfirmedCOVNotification	☐	☒
		☐	UnconfirmedCOVNotification	☐	☒
DS-COVP-B	Data Sharing-COVP–B	☐	SubscribeCOV	☐	☒
		☐	ConfirmedCOVNotification	☒	☐
		☐	UnconfirmedCOVNotification	☒	☐
DS-COVU-A	Data Sharing-COV-Unsolicited–A	☐	UncofirmedCOVNotification	☐	☒
DS-COVU-B	Data Sharing-COV-Unsolicited-B	☐	UncofirmedCOVNotification	☒	☐

3.2 *Alarm and Event Management BIBBs*

BIBB Type		Active	BACnet Service	Initiate	Execute
AE-N-A	Alarm and Event-Notification–A	☐	ConfirmedEventNotification	☐	☒
		☐	UnconfirmedEventNotification	☐	☒
AE-N-I-B	Alarm and Event-Notification Internal–B	☐	ConfirmedEventNotification	☒	☐
		☐	UnconfirmedEventNotification	☒	☐
AE-N-E-B	Alarm and Event-Notification External–B	☐	ConfirmedEventNotification	☒	☐
		☐	UnconfirmedEventNotification	☒	☐
AE-ACK-A	Alarm and Event-ACK–A	☐	AcknowledgeAlarm	☒	☐
AE-ACK-B	Alarm and Event-ACK–B	☐	AcknowledgeAlarm	☐	☒
AE-ASUM-A	Alarm and Event-Summary–A	☐	GetAlarmSummary	☒	☐
AE-ASUM-B	Alarm and Event-Summary–B	☐	GetAlarmSummary	☐	☒
AE-ESUM-A	Event-Summary–A	☐	GetEnrollmentSummary	☒	☐
AE-ESUM-B	Event-Summary–B	☐	GetEnrollmentSummary	☐	☒
AE-INFO-A	Alarm and Event-Information–A	☐	GetEventInformation	☒	☐
AE-INFO-B	Alarm and Event-Information–B	☐	GetEventInformation	☐	☒
AE-LS-A	Alarm and Event-LifeSafety–A	☐	LifeSafetyOperation	☒	☐
AE-LS-B	Alarm and Event-LifeSafety–B	☐	LifeSafetyOperation	☐	☒

© HMS Industrial Networks S.L.U - All rights reserved
This information is subject to change without notice

3.3 *Scheduling BIBBs*

BIBB Type		Active	BACnet Service	Initiate	Execute
SCHED-A	Scheduling–A *(must support DS-RP-A and DS-WP-A)*	☐			
		☐			
SCHED-I-B	Scheduling-Internal–B *(shall support DS-RP-B and DS-WP-B)* *(shall also support ether DM-TS-B or DS-UTC-B)*	☐			
		☐			
SCHED-E-B	Scheduling-External–B *(shall support SCHED-I-B and DS-WP-A)*	☐			
		☐			
T-VMT-A	Trending - Viewing and Modifying Trends–A	☐	ReadRange	☐	☒
T-VMT-I-B	Trending - Viewing and Modifying Trends Inernal–B	☐	ReadRange	☐	☒
T-VMT-E-B	Trending - Viewing and Modifying Trends External–B	☐	ReadRange	☐	☒
T-ATR-A	Trending - Automated Trend Retrieval–A	☐	ConfirmedEventNotification	☐	☒
		☐	ReadRange	☒	☐
T-ATR-B	Trending - Automated Trend Retrieval–B	☐	ConfirmedEventNotification	☒	☐
		☐	ReadRange	☐	☒

3.4 *Trending BIBBs*

BIBB Type		Active	BACnet Service	Initiate	Execute
T-VMT-A	Trending - Viewing and Modifying Trends–A	☐	ReadRange	☒	☐
T-VMT-I-B	Trending - Viewing and Modifying Trends Inernal–B	☐	ReadRange	☐	☒
T-VMT-E-B	Trending - Viewing and Modifying Trends External–B	☐	ReadRange	☐	☒
T-ATR-A	Trending - Automated Trend Retrieval–A	☐	ConfirmedEventNotification	☐	☒
		☐	ReadRange	☒	☐
T-ATR-B	Trending - Automated Trend Retrieval–B	☐	ConfirmedEventNotification	☒	☐
		☐	ReadRange	☐	☒

3.5 *Network Management BIBBs*

BIBB Type		Active	BACnet Service	Initiate	Execute
NM-CE-A	Network Management - Connection Establishment–A	☐	Establish-Connection-To-Network	☒	☐
		☐	Disconnect-Connection-To-Network	☒	☐
NM-CE-B	Network Management - Connection Establishment– B	☐	Establish-Connection-To-Network	☐	☒
		☐	Disconnect-Connection-To-Network	☐	☒
NM-RC-A	Network Management - Router Configuration–A	☐	Who-Is-Router-To-Network	☒	☐
		☐	I-Am-Router-To-Network	☐	☒
		☐	I-Could-Be-Router-To-Network	☐	☒
		☐	Initialize-Routing-Table	☒	☐
		☐	Initialize-Routing-Table-Ack	☐	☒
NM-RC-B	Network Management - Router Configuration–B	☐	Who-Is-Router-To-Network	☒	☒
		☐	I-Am-Router-To-Network	☒	☒
		☐	Initialize-Routing-Table	☐	☒
		☐	Initialize-Routing-Table-Ack	☒	☐

© HMS Industrial Networks S.L.U - All rights reserved
This information is subject to change without notice

3.6 *Device Management BIBBs*

BIBB Type		Active	BACnet Service	Initiate	Execute
DM-DDB-A	Device Management - Dynamic Device Binding–A	☐	Who-Is	☒	☐
		☐	I-Am	☐	☒
DM-DDB-B	Device Management - Dynamic Device Binding–B	☒	Who-Is	☐	☒
		☒	I-Am	☒	☐
DM-DOB-A	Device Management - Dynamic Object Binding–A	☐	Who-Has	☒	☐
		☐	I-Have	☐	☒
DM-DOB-B	Device Management - Dynamic Object Binding–B	☒	Who-Has	☐	☒
		☒	I-Have	☒	☐
DM-DCC-A	Device Management - DeviceCommunicationControl–A	☐	DeviceCommunicationControl	☒	☐
DM-DCC-B	Device Management - DeviceCommunicationControl–B	☒	DeviceCommunicationControl	☐	☒
DM-PT-A	Device Management - PrivateTransfer–A	☐	ConfirmedPrivateTransfer	☒	☐
		☐	UnconfirmedPrivateTransfer	☒	☐
DM-PT-B	Device Management - PrivateTransfer–B	☐	ConfirmedPrivateTransfer	☐	☒
		☐	UnconfirmedPrivateTransfer	☐	☒
DM-TM-A	Device Management - Text Message–A	☐	ConfirmedTextMessage	☒	☐
		☐	UnconfirmedTextMessage	☒	☐
DM-TM-B	Device Management - Text Message–B	☐	ConfirmedTextMessage	☐	☒
		☐	UnconfirmedTextMessage	☐	☒
DM-TS-A	Device Management - TimeSynchronization–A	☐	TimeSynchronization	☒	☐
DM-TS-B	Device Management - TimeSynchronization–B	☐	TimeSynchronization	☐	☒
DM-UTC-A	Device Management - UTCTimeSynchronization–A	☐	UTCTimeSynchronization	☒	☐
DM-UTC-B	Device Management - UTCTimeSynchronization–B	☐	UTCTimeSynchronization	☐	☒
DM-RD-A	Device Management - ReinitializeDevice–A	☐	ReinitializeDevice	☒	☐
DM-RD-B	Device Management - ReinitializeDevice–B	☒	ReinitializeDevice	☐	☒
DM-BR-A	Device Management - Backup and Restore–A	☐	AtomicReadFile	☒	☐
		☐	AtomicWriteFile	☒	☐
		☐	CreateObject	☒	☐
		☐	ReinitializeDevice	☒	☐
DM-BR-B	Device Management - Backup and Restore–B	☐	AtomicReadFile	☐	☒
		☐	AtomicWriteFile	☐	☒
		☐	ReinitializeDevice	☐	☒
DM-R-A	Device Management - Restart–A	☐	UnconfimedCOVNotification	☐	☒
DM-R-B	Device Management - Restart–B	☐	UnconfimedCOVNotification	☒	☐
DM-LM-A	Device Management - List Manipulation–A	☐	AddListElement	☒	☐
		☐	RemoveListElement	☒	☐
DM-LM-B	Device Management - List Manipulation–B	☐	AddListElement	☐	☒
		☐	RemoveListElement	☐	☒
DM-OCD-A	Device Management - Object Creation and Deletion–A	☐	CreateObject	☒	☐
		☐	DeleteObject	☒	☐
DM-OCD-B	Device Management - Object Creation and Deletion–B	☐	CreateObject	☐	☒
		☐	DeleteObject	☐	☒
DM-VT-A	Device Management - Virtual Terminal–A	☐	VT-Open	☒	☐
		☐	VT-Close	☒	☒
		☐	VT-Data	☒	☒
DM-VT-B	Device Management - Virtual Terminal–B	☐	VT-Open	☐	☒
		☐	VT-Close	☒	☒
		☐	VT-Data	☒	☒

© HMS Industrial Networks S.L.U - All rights reserved
This information is subject to change without notice

4 Service Types

Service type	Service name	Supported	Remarks
Alarm and Event Services	AcknowledgeAlarm	☐	
	ConfirmedCOVNotification	☐	
	ConfirmedEventNotification	☐	
	GetAlarmSummary	☐	
	GetEnrollmentSummary	☐	
	SubscribeCOV	☒	
File Access Services	AtomicReadFile	☐	
	AtomicWriteFile	☐	
Object Access Services	AddListElement	☐	
	RemoveListElement	☐	
	CreateObject	☐	
	DeleteObject	☐	
	ReadProperty	☒	
	ReadPropertyConditional	☐	
	ReadPropertyMultiple	☒	
	ReadRange	☐	
	WriteProperty	☒	
	WritePropertyMultiple	☒	
Remote Device Management Services	DeviceComminicationControl	☐	
	ConfirmedPrivateTransfer	☐	
	ConfirmedTextMessage	☐	
	ReinitializeDevice	☒	
Virtual Terminal Services	VtOpen	☐	
	VtClose	☐	
	VtData	☐	
Security Services	Authenticate	☐	
	RequestKey	☐	
Unconfirmed Services	I-Am	☒	
	I-Have	☒	
	UnconfirmedCOVNotification	☐	
	UnconfirmedEventNotification	☐	
	UnconfirmedPrivateTransfer	☐	
	UnconfirmedTextMessage	☐	
	TimeSynchronization	☐	
	UtcTimeSynchronization	☐	
	Who-Has	☒	
	Who-Is	☒	
	LifeSafetyOperation	☐	
	SubscribeCOVProperty	☒	
	GetEventInformation	☐	

© HMS Industrial Networks S.L.U - All rights reserved
This information is subject to change without notice

5 Objects

5.1 *Supported Object Types*

The objects supported are shown in the table below.

Object Type	ID	Supported	Management Point
Analog-Input	0	☒	SetPoint_status RoomTemperature_status ErrorCode ErrorAddress IndoorLiquidPipeTemp IndoorGasPipeTemp IndoorEEVOpening
Analog-Output	1	☒	SetPoint_command RoomTemperature_command
Analog-Value	2	☒	OnTimeCounter OccupiedCoolSetPoint OccupiedHeatSetPoint UnoccupiedCoolSetPoint UnoccupiedHeatSetPoint
Averaging	18	☐	
Binary-Input	3	☒	OnOff_status ErrorActive FIlterSign ThermostatON
Binary-Output	4	☒	OnOff_command FilterReset
Binary-Value	5	☒	OccupancyContinousCheck UnnoccupiedDeadBandAction LockRemoteControl
Calendar	6	☐	
Command	7	☐	
Device	8	☒	INBACDAI001R000
Event-Enrollment	9	☐	
File	10	☐	
Group	11	☐	
Life-Safety-Point	21	☐	
Life-Safety-Zone	22	☐	
Loop	12	☐	
Multistate-Input	13	☒	Mode_status FanSpeed_status AirDirectionUD_status ErrorCodeM RemoteControllerProhibit_status RuntimeModeRestriction
Multistate-Output	14	☒	Mode_command FanSpeed_command AirDirectionUD_command RemoteControllerProhibit_command
Multistate-Value	19	☒	Occupancy
Notification-Class	15	☐	
Program	16	☐	
Schedule	17	☐	
Trend-Log	20	☐	

© HMS Industrial Networks S.L.U - All rights reserved
This information is subject to change without notice

5.2 *Member objects*

5.2.1 Type: Gateway

Object-name	Description	Object-type	Object-instance
INBACDAI001R000	Daikin RC Interface	Device	246000*

5.2.2 Type: Indoor Unit

Object-name	Description	Object-type	Object-instance
OnOff_status		BI	0
OnOff_command		BO	0
Mode_status		MI	0
Mode_command		MO	0
SetPoint_status		AI	0
SetPoint_command		AO	0
FanSpeed_status		MI	1
FanSpeed_command		MO	1
AirDirectionUD_status		MI	2
AirDirectionUD_command		MO	2
RoomTemperature_status		AI	1
RoomTemperature_command		AO	1
ErrorCode		AI	2
ErrorCodeM		MI	4
ErrorActive		BI	1
ErrorAddress		AI	4
OnTimeCounter		AV	0
FilterSign		BI	6
FilterReset		BO	4
Occupancy		MV	0
OccupiedCoolSetPoint		AV	1
OccupiedHeatSetPoint		AV	2
UnoccupiedCoolSetPoint		AV	3
UnoccupiedHeatSetPoint		AV	4
OccupancyContinuousCheck		BV	0
UnoccupiedDeadbandAction		BV	1
LockRemoteControl		BV	2
IndoorLiquidPipeTemp		AI	5
IndoorGasPipeTemp		AI	6
IndoorEEVOpening		AI	7
Thermostat ON		BI	7

* This is the default value. Check section 5.3 (below) for more information.

© HMS Industrial Networks S.L.U - All rights reserved
This information is subject to change without notice

5.3 *Objects and properties*

Below you can find relevant information for the objects and properties.

Object_Identifier: In the **Device Object**, is configurable writing directly on the property. either from BACnet or through our configuration tools and can be set automatically or manually. When set automatically, it is set using a base address and the address selected in SW2 P1..P7. The base address can be selected using the configuration tool. When set manually, the address is directly the one configured on the configuration tool. See section 7.4 for more information

Object_Name: In the **Device Object**, is configurable writing directly on this property. This can be done using the configuration tools too. See section 7.6 for more information.

Description: In the **Device Object**, is configurable writing directly on the property, length maximum 63 chars. This string is configurable using the configuration tool. See section 7.6 for more information.

5.3.1 Daikin AC Gateway (Device Object Type)

Property Identifier	Property Datatype	Value	ASHRAE	IBOX
Object_Identifier	BACnetObjectIdentifier	(Device, 246000)	R	R
Object_Name	CharacterString	" INBACDAI001R000 "	R	W
Object_Type	BACnetObjectType	DEVICE (8) (Device Object Type)	R	R
System_Status	BACnetDeviceStatus	OPERATIONAL (0)	R	R
Vendor_Name	CharacterString	"HMS Industrial Networks S.L.U"	R	R
Vendor_Identifier	Unsigned16	246	R	R
Model_Name	CharacterString	"INBACDAI001R000 "	R	R
Firmware_Revision	CharacterString	"1.0.0.0"	R	R
Application_Software_ Version	CharacterString	"1.0.0.0"	R	R
Location	CharacterString	""	O	-
Description	CharacterString	"Daikin RC interface"	O	R
Protocol_Version	Unsigned	1	R	R
Protocol_Revision	Unsigned	12	R	R
Protocol_Services_ Supported	BACnetServiceSupported	Refer to section 4 [Service Types]	R	R
Protocol_Object_Types_ Supported	BACnetObjectTypes Supported	Refer to section 5.1 [Object Types]	R	R
Object_List	BACnetArray[N] of BACnetObjectIdentifier	BACnetARRAY[N]	R	R
Structured_Object_List	BACnetArray[N] of BACnetObjectIdentifier	-	O	-
Max_APDU_Length_ Accepted	Unsigned	480 when MSTP / 1476 when BACnet/IP	R	R
Segmentation_Supported	BACnetSegmentation	SEGMENTED-BOTH (0)	R	R
Max_Segments_accepted	Unsigned	16	O	R
VT_Classes_Supported	List of BACnetVTClass	-	O	-
Active_VT_Sessions	List of BACnetVTSession	-	O	-
Local_Date	Date	-	O	-

© HMS Industrial Networks S.L.U - All rights reserved
This information is subject to change without notice

Local_Time	Time	-	O	-
UTC_Offset	INTEGER	-	O	-
Daylight_Savings_Status	BOOLEAN	-	O	-
APDU_Segment_Timeout	Unsigned	3000	R	R
APDU_Timeout	Unsigned	3000	R	R
Number_of_APDU_ Retries	Unsigned	3	R	R
List_Of_Session_Keys	List of BACnetSessionKey	-	O	-
Time_Synchronization_ Recipients	List of BACnetRecipient	-	O	-
Max_Master * **	Unsigned	127	R	W
Max_Info_Frames *	Unsigned	1	O	R
Device_Address_Binding	List of BACnetAddressBinding	NULL (empty)	R	R
Database_Revision	Unsigned	0	R	R
Configuration_Files	BACnetArray[N] of BACnetObjectIdentifier	-	O	-
Last_Restore_Time	BACnetTimeStamp	-	O	-
Backup_Failure_Timeout	Unsigned16	-	O	-
Active_COV_ Subscriptions	List of BACnetCOVSubscription	List of BACnetCOVSubscription	O	R
Slave_Proxy_Enable	BACnetArray[N] of BOOLEAN	-	O	-
Manual_Slave_Address_ Binding	List of BACnetAddressBinding	-	O	-
Auto_Slave_Discovery	BACnetArray[N] of BOOLEAN	-	O	-
Slave_Address_Binding	BACnetAddressBinding	-	O	-
Last_Restart_Reason	BACnetRestartReason	-	O	-
Time_Of_Device_Restart	BACnetTimeStamp	-	O	-
Restart_Notification_ Recipients	List of BACnetRecipient	-	O	-
UTC_Time_ Synchronization_ Recipients	List of BACnetRecipient	-	O	-
Time_Synchronization_ Interval	Unsigned	-	O	-
Align_Intervals	BOOLEAN	-	O	-
Interval_Offset	Unsigned	-	O	-
Profile_Name	CharacterString	-	O	-

* Only available when MSTP is used

** Configurable through the configuration tool. See section 7.6 for more information.

© HMS Industrial Networks S.L.U - All rights reserved
This information is subject to change without notice

5.3.2 OnOff_status (Binary Input Object Type)

It indicates if the indoor unit is in On or Off status.

Property Identifier	Property Datatype	Value	ASHRAE	IBOX
Object_Identifier	BACnetObjectIdentifier	(Binary Input, 0)	R	R
Object_Name	CharacterString	“OnOff_status”	R	R
Object_Type	BACnetObjectType	BINARY_INPUT (3)	R	R
Present_Value	BACnetBinaryPV	INACTIVE (0) / ACTIVE (1)	R	R
Description	CharacterString	-	O	-
Device_Type	CharacterString	-	O	-
Status_Flags	BACnetStatusFlags	{FALSE, FALSE/TRUE, FALSE, FALSE}	R	R
Event_State	BACnetEventState	STATE_NORMAL (0)	R	R
Reliability	BACnetReliability	NO_FAULT_DETECTED (0), UNRELIABLE_OTHER (7)	O	R
Out_Of_Service	BOOLEAN	FALSE	R	R
Polarity	BACnetPolarity	NORMAL (0)	R	R
Inactive_Text	CharacterString	"Off"	O	R
Active_Text	CharacterString	“On”	O	R
Change_Of_State_Time	BACnetDatetime	-	O	-
Change_Of_State_Count	Unsigned	-	O	-
Time_Of_State_Count_Reset	BACnetDatetime	-	O	-
Elapsed_Active_Time	Unsigned	-	O	-
Time_Of_Active_Time_Reset	BACnetDatetime	-	O	-
Time_Delay	Unsigned	-	O	-
Notification_Class	Unsigned	-	O	-
Alarm_Value	BACnetBinaryPV	-	O	-
Event_Enable	BACnetEventTransitionBits	-	O	-
Acked_Transitions	BACnetEventTransitionBits	-	O	-
Notify_Type	BACnetNotifyType	-	O	-
Event_Time_Stamps	BACnetArray[N] of BACnetTimeStamp	-	O	-
Profile_Name	CharacterString	-	O	-

© HMS Industrial Networks S.L.U - All rights reserved
This information is subject to change without notice

5.3.3 OnOff_command (Binary Output Object Type)

It sets the indoor unit to On or Off.

Property Identifier	Property Datatype	Value	ASHRAE	IBOX
Object_Identifier	BACnetObjectIdentifier	(Binary Output, 0)	R	R
Object_Name	CharacterString	“OnOff_command”	R	R
Object_Type	BACnetObjectType	BINARY_OUTPUT (4)	R	R
Present_Value	BACnetBinaryPV	INACTIVE (0) / ACTIVE (1)	W	W
Description	CharacterString	-	O	-
Device_Type	CharacterString	-	O	-
Status_Flags	BACnetStatusFlags	{FALSE, FALSE, FALSE, FALSE}	R	R
Event_State	BACnetEventState	STATE_NORMAL (0)	R	R
Reliability	BACnetReliability	NO_FAULT_DETECTED (0)	O	R
Out_Of_Service	BOOLEAN	FALSE	R	R
Polarity	BACnetPolarity	NORMAL (0)	R	R
Inactive_Text	CharacterString	"Off"	O	R
Active_Text	CharacterString	“On"	O	R
Change_Of_State_Time	BACnetDatetime	-	O	-
Change_Of_State_Count	Unsigned	-	O	-
Time_Of_State_Count_Reset	BACnetDatetime	-	O	-
Elapsed_Active_Time	Unsigned	-	O	-
Time_Of_Active_Time_Reset	BACnetDatetime	-	O	-
Minimum_Off_Time	Unsigned32	-	O	-
Minimum_On_Time	Unsigned32	-	O	-
Priority_Array	BACnetPriorityArray	BACnetPriorityArray	R	R
Relinquish_Default	BACnetBinaryPV	INACTIVE (0)	R	R
Time_Delay	Unsigned	-	O	-
Notification_Class	Unsigned	-	O	-
Feedback_Value	BACnetBinaryPV	-	O	-
Event_Enable	BACnetEventTransitionBits	-	O	-
Acked_Transitions	BACnetEventTransitionBits	-	O	-
Notify_Type	BACnetNotifyType	-	O	-
Event_Time_Stamps	BACnetArray[N] of BACnetTimeStamp	-	O	-
Profile_Name	CharacterString	-	O	-

© HMS Industrial Networks S.L.U - All rights reserved
This information is subject to change without notice

5.3.4 Mode_status (Multistate Input Object Type)

It indicates the active mode for the indoor unit.

Property Identifier	Property Datatype	Value	ASHRAE	IBOX
Object_Identifier	BACnetObjectIdentifier	(Multi-state Input, 0)	R	R
Object_Name	CharacterString	"Mode_status"	R	R
Object_Type	BACnetObjectType	MULTISTATE_INPUT (13)	R	R
Present_Value	Unsigned	1 ~ 8	R	R
Description	CharacterString	-	O	-
Device_Type	CharacterString	-	O	-
Status_Flags	BACnetStatusFlags	{FALSE, FALSE/TRUE, FALSE, FALSE}	R	R
Event_State	BACnetEventState	STATE_NORMAL (0)	R	R
Reliability	BACnetReliability	NO_FAULT_DETECTED (0), UNRELIABLE_OTHER (7)	O	R
Out_Of_Service	BOOLEAN	FALSE	R	R
Number_Of_States	Unsigned	8	R	R
State_Text	BACnetArray[N] of CharacterString	*Check the **Mode Status setting** table below*	O	R
Time_Delay	Unsigned	-	O	-
Notification_Class	Unsigned	-	O	-
Alarm_Values	List of Unsigned	-	O	-
Fault_Values	List of Unsigned	-	O	-
Event_Enable	BACnetEventTransitionBits	-	O	-
Acked_Transitions	BACnetEventTransitionBits	-	O	-
Notify_Type	BACnetNotifyType	-	O	-
Event_Time_Stamps	BACnetArray[N] of BACnetTimeStamp	-	O	-
Profile_Name	CharacterString	-	O	-

Mode status setting table

Mode status interpretation is possible using the value in the following correspondence table.

Present_Value	Contents displayed in State_Text
1	Heat
2	Cool
3	Fan
4	Dry
5	Auto
6	AutoHeat
7	AutoCool
8	AutoFan

© HMS Industrial Networks S.L.U - All rights reserved
This information is subject to change without notice

5.3.5 Mode_command (Multistate Output Object Type)

It allows control over the indoor unit's mode.

Property Identifier	Property Datatype	Value	ASHRAE	IBOX
Object_Identifier	BACnetObjectIdentifier	(Multi-state Output, 0)	R	R
Object_Name	CharacterString	"Mode_command"	R	R
Object_Type	BACnetObjectType	MULTISTATE_OUTPUT (14)	R	R
Present_Value	Unsigned	1 ~ 5	W	W
Description	CharacterString	-	O	-
Device_Type	CharacterString	-	O	-
Status_Flags	BACnetStatusFlags	{FALSE, FALSE, FALSE, FALSE}	R	R
Event_State	BACnetEventState	STATE_NORMAL (0)	R	R
Reliability	BACnetReliability	NO_FAULT_DETECTED (0)	O	R
Out_Of_Service	BOOLEAN	FALSE	R	R
Number_Of_States	Unsigned	5	R	R
State_Text	BACnetArray[N] of CharacterString	*Check the **Mode Command setting** table below*	O	R
Priority_Array	BACnetPriorityArray	BACnetPriorityArray	R	R
Relinquish_Default	Unsigned	1	R	R
Time_Delay	Unsigned	-	O	-
Notification_Class	Unsigned	-	O	-
Feedback_Value	Unsigned	-	O	-
Event_Enable	BACnetEventTransitionBits	-	O	-
Acked_Transitions	BACnetEventTransitionBits	-	O	-
Notify_Type	BACnetNotifyType	-	O	-
Event_Time_Stamps	BACnetArray[N] of BACnetTimeStamp	-	O	-
Profile_Name	CharacterString	-	O	-

Mode Command setting table

Mode commands can be set using the values in the following correspondence table.

Present_Value	Contents displayed in State_Text
1	Heat
2	Cool
3	Fan
4	Dry
5	Auto

© HMS Industrial Networks S.L.U - All rights reserved
This information is subject to change without notice

5.3.6 Setpoint_status (Analog Input Object Type)

It indicates the current setpoint temperature in the indoor unit.

Property Identifier	Property Datatype	Value	ASHRAE	IBOX
Object_Identifier	BACnetObjectIdentifier	(Analog Input, 0)	R	R
Object_Name	CharacterString	“SetPoint_status”	R	R
Object_Type	BACnetObjectType	ANALOG_INPUT (0)	R	R
Present_Value	REAL	16 .. 32ºC 60 .. 90ºF	R	R
Description	CharacterString	-	O	-
Device_Type	CharacterString	-	O	-
Status_Flags	BACnetStatusFlags	{FALSE, FALSE/TRUE, FALSE, FALSE}	R	R
Event_State	BACnetEventState	STATE_NORMAL (0)	R	R
Reliability	BACnetReliability	NO_FAULT_DETECTED (0), UNRELIABLE_OTHER (7)	O	R
Out_Of_Service	BOOLEAN	FALSE	R	R
Update_Interval	Unsigned	-	O	-
Units **	BACnetEngineeringUnits	Degrees Celsius (62), Degrees Fahrenheit (64)	R	R
Min_Pres_Value	REAL	16°C // 60°F	O	R
Max_Pres_Value	REAL	32°C // 90°F	O	R
Resolution	REAL	-	O	-
COV_Increment	REAL	0	O	W
Time_Delay	Unsigned	-	O	-
Notification_Class	Unsigned	-	O	-
High_Limit	REAL	-	O	-
Low_Limit	REAL	-	O	-
Deadband	REAL	-	O	-
Limit_Enable	BACnetLimitEnable	-	O	-
Event_Enable	BACnetEventTransitionBits	-	O	-
Acked_Transitions	BACnetEventTransitionBits	-	O	-
Notify_Type	BACnetNotifyType	-	O	-
Event_Time_Stamps	BACnetArray[N] of BACnetTimeStamp	-	O	-
Profile_Name	CharacterString	-	O	-

** Use of Celsius or Fahrenheits units can be selected throught the switch configuration. Check section 6.1 for more information.

© HMS Industrial Networks S.L.U - All rights reserved
This information is subject to change without notice

5.3.7 Setpoint_command (Analog Output Object Type)

It sets the desired temperature in the indoor unit.

Property Identifier	Property Datatype	Value	ASHRAE	IBOX
Object_Identifier	BACnetObjectIdentifier	(Analog Output, 0)	R	R
Object_Name	CharacterString	“SetPoint_command”	R	R
Object_Type	BACnetObjectType	ANALOG_OUTPUT (1)	R	R
Present_Value	REAL	16 .. 32°C 60 .. 90°F	R	R
Description	CharacterString	-	O	-
Device_Type	CharacterString	-	O	-
Status_Flags	BACnetStatusFlags	{FALSE, FALSE, FALSE, FALSE}	R	R
Event_State	BACnetEventState	STATE_NORMAL (0)	R	R
Reliability	BACnetReliability	NO_FAULT_DETECTED (0)	O	R
Out_Of_Service	BOOLEAN	FALSE	R	R
Update_Interval	Unsigned	-	O	-
Units **	BACnetEngineeringUnits	Degrees Celsius (62), Degrees Fahrenheit (64)	R	R
Min_Pres_Value	REAL	16°C // 60°F	O	R
Max_Pres_Value	REAL	32°C // 90°F	O	R
Resolution	REAL	-	O	-
COV_Increment	REAL	0	O	W
Priority_Array	BACnetPriorityArray	BACnetPriorityArray	R	R
Relinquish_Default	Unsigned	22	R	R
Time_Delay	Unsigned	-	O	-
Notification_Class	Unsigned	-	O	-
High_Limit	REAL	-	O	-
Low_Limit	REAL	-	O	-
Deadband	REAL	-	O	-
Limit_Enable	BACnetLimitEnable	-	O	-
Event_Enable	BACnetEventTransitionBits	-	O	-
Acked_Transitions	BACnetEventTransitionBits	-	O	-
Notify_Type	BACnetNotifyType	-	O	-
Event_Time_Stamps	BACnetArray[N] of BACnetTimeStamp	-	O	-
Profile_Name	CharacterString	-	O	-

** Use of Celsius or Fahrenheits units can be selected throught the switch configuration. Check section 6.1 for more information.

© HMS Industrial Networks S.L.U - All rights reserved
This information is subject to change without notice

5.3.8 FanSpeed_status (Multistate Input Object Type)

It indicates the fan speed status of the indoor unit.

Property Identifier	Property Datatype	Value	ASHRAE	IBOX
Object_Identifier	BACnetObjectIdentifier	(Multi-state Input, 1)	R	R
Object_Name	CharacterString	"FanSpeed_status"	R	R
Object_Type	BACnetObjectType	MULTISTATE_INPUT(13)	R	R
Present_Value	Unsigned	*Check the **Fan Speed status setting** corresponding table below*	R	R
Description	CharacterString	-	O	-
Device_Type	CharacterString	-	O	-
Status_Flags	BACnetStatusFlags	{FALSE, FALSE/TRUE, FALSE, FALSE}	R	R
Event_State	BACnetEventState	STATE_NORMAL (0)	R	R
Reliability	BACnetReliability	NO_FAULT_DETECTED (0), UNRELIABLE_OTHER (7)	O	R
Out_Of_Service	BOOLEAN	FALSE/TRUE	R	R
Number_Of_States	Unsigned	4	R	R
State_Text	BACnetArray[N] of CharacterString	*Check the **Fan Speed status setting** corresponding table below*	O	R
Time_Delay	Unsigned	-	O	-
Notification_Class	Unsigned	-	O	-
Alarm_Values	List of Unsigned	-	O	-
Fault_Values	List of Unsigned	-	O	-
Event_Enable	BACnetEventTransitionBits	-	O	-
Acked_Transitions	BACnetEventTransitionBits	-	O	-
Notify_Type	BACnetNotifyType	-	O	-
Event_Time_Stamps	BACnetArray[N] of BACnetTimeStamp	-	O	-
Profile_Name	CharacterString	-	O	-

Fan Speed status setting table

Fan speed interpretation is possible using the value from one of the following correspondence tables, depending on the configuration settings:

Present_Value	Contents displayed in State_Text
1	Auto
2	Low
3	Mid
4	High

Present_Value (Legacy)	Contents displayed in State_Text (Legacy)
1	Low
2	Mid
3	High
6	Auto

The left table corresponds to the default values, the right table only applies if **Legacy Fan speed** is selected in the AC settings section of the configuration tool. See section 7.6.2 for details.

© HMS Industrial Networks S.L.U - All rights reserved
This information is subject to change without notice

5.3.9 FanSpeed_command (Multistate Output Object Type)

It allows control over the fan speed for the indoor unit.

Property Identifier	Property Datatype	Value	ASHRAE	IBOX
Object_Identifier	BACnetObjectIdentifier	(Multi-state Output, 1)	R	R
Object_Name	CharacterString	"FanSpeed_command"	R	R
Object_Type	BACnetObjectType	MULTISTATE_OUTPUT (14)	R	R
Present_Value	Unsigned	*Check the **Fan Speed command setting** corresponding table below*	W	W
Description	CharacterString	-	O	-
Device_Type	CharacterString	-	O	-
Status_Flags	BACnetStatusFlags	{FALSE, FALSE, FALSE, FALSE}	R	R
Event_State	BACnetEventState	STATE_NORMAL (0)	R	R
Reliability	BACnetReliability	NO_FAULT_DETECTED (0)	O	R
Out_Of_Service	BOOLEAN	FALSE	R	R
Number_Of_States	Unsigned	4	R	R
State_Text	BACnetArray[N] of CharacterString	*Check the **Fan Speed command setting** corresponding table below*	O	R
Priority_Array	BACnetPriorityArray	BACnetPriorityArray	R	R
Relinquish_Default	Unsigned	1	R	R
Time_Delay	Unsigned	-	O	-
Notification_Class	Unsigned	-	O	-
Feedback_Value	Unsigned	-	O	-
Event_Enable	BACnetEventTransitionBits	-	O	-
Acked_Transitions	BACnetEventTransitionBits	-	O	-
Notify_Type	BACnetNotifyType	-	O	-
Event_Time_Stamps	BACnetArray[N] of BACnetTimeStamp	-	O	-
Profile_Name	CharacterString	-	O	-

Fan Speed command setting table

Fan speed commands can be set using the value from one of the following correspondence tables, depending on the configuration settings:

Present_Value	Contents displayed in State_Text
1	Auto
2	Low
3	Mid
4	High

Present_Value (Legacy)	Contents displayed in State_Text (Legacy)
1	Low
2	Mid
3	High
6	Auto

The left table corresponds to the default values, the right table only applies if **Legacy Fan speed** is selected in the AC settings section of the configuration tool. See section 7.6.2 for details.

© HMS Industrial Networks S.L.U - All rights reserved
This information is subject to change without notice

5.3.10 AirDirectionUD_status (Multistate Input Object Type)

It indicates the status of the vertical vane (Up/Down) for the indoor unit.

Property Identifier	Property Datatype	Value	ASHRAE	IBOX
Object_Identifier	BACnetObjectIdentifier	(Multi-state Input, 2)	R	R
Object_Name	CharacterString	"AirDirectionUD_status"	R	R
Object_Type	BACnetObjectType	MULTISTATE_INPUT(13)	R	R
Present_Value	Unsigned	1 ~ 7	R	R
Description	CharacterString	-	O	-
Device_Type	CharacterString	-	O	-
Status_Flags	BACnetStatusFlags	{FALSE, FALSE/TRUE, FALSE, FALSE}	R	R
Event_State	BACnetEventState	STATE_NORMAL (0)	R	R
Reliability	BACnetReliability	NO_FAULT_DETECTED (0), UNRELIABLE_OTHER (7)	O	R
Out_Of_Service	BOOLEAN	FALSE/TRUE	R	R
Number_Of_States	Unsigned	7	R	R
State_Text	BACnetArray[N] of CharacterString	*Check the **Air Direction Status** table below*	O	R
Time_Delay	Unsigned	-	O	-
Notification_Class	Unsigned	-	O	-
Alarm_Values	List of Unsigned	-	O	-
Fault_Values	List of Unsigned	-	O	-
Event_Enable	BACnetEventTransitionBits	-	O	-
Acked_Transitions	BACnetEventTransitionBits	-	O	-
Notify_Type	BACnetNotifyType	-	O	-
Event_Time_Stamps	BACnetArray[N] of BACnetTimeStamp	-	O	-
Profile_Name	CharacterString	-	O	-

Air direction Up/Down status table

Air direction interpretation is possible using the value in the following correspondence table.

Present_Value	Contents displayed in State_Text
1	Up
2	Mid-1
3	Mid-2
4	Mid-3
5	Down
6	Swing
7	Stop

© HMS Industrial Networks S.L.U - All rights reserved
This information is subject to change without notice

5.3.11 AirDirectionUD_command (Multistate Output Object Type)

It allows control over the vertical air direction (Up/Down) for the indoor unit.

Property Identifier	Property Datatype	Value	ASHRAE	IBOX
Object_Identifier	BACnetObjectIdentifier	(Multi-state Output, 2)	R	R
Object_Name	CharacterString	“AirDirectionUD_command”	R	R
Object_Type	BACnetObjectType	MULTISTATE_OUTPUT (14)	R	R
Present_Value	Unsigned	1 ~ 6	W	W
Description	CharacterString	-	O	-
Device_Type	CharacterString	-	O	-
Status_Flags	BACnetStatusFlags	{FALSE, FALSE, FALSE, FALSE}	R	R
Event_State	BACnetEventState	STATE_NORMAL (0)	R	R
Reliability	BACnetReliability	NO_FAULT_DETECTED (0)	O	R
Out_Of_Service	BOOLEAN	FALSE	R	R
Number_Of_States	Unsigned	6	R	R
State_Text	BACnetArray[N] of CharacterString	*Check the **Air Direction Command** table below*	O	R
Priority_Array	BACnetPriorityArray	-	R	R
Relinquish_Default	Unsigned	-	R	R
Time_Delay	Unsigned	-	O	-
Notification_Class	Unsigned	-	O	-
Feedback_Value	Unsigned	-	O	-
Event_Enable	BACnetEventTransitionBits	-	O	-
Acked_Transitions	BACnetEventTransitionBits	-	O	-
Notify_Type	BACnetNotifyType	-	O	-
Event_Time_Stamps	BACnetArray[N] of BACnetTimeStamp	-	O	-
Profile_Name	CharacterString	-	O	-

Air direction Up/Down Command table

Air direction commands can be set using the values in the following correspondence table.

Present_Value	Contents displayed in State_Text
1	Up
2	Mid-1
3	Mid-2
4	Mid-3
5	Down
6	Swing

© HMS Industrial Networks S.L.U - All rights reserved
This information is subject to change without notice

5.3.12 RoomTemperature_status (Analog Input Object Type)

It indicates the room temperature from the sensor in the indoor unit. Check section 7.4 for more information.

Property Identifier	Property Datatype	Value	ASHRAE	IBOX
Object_Identifier	BACnetObjectIdentifier	(Analog Input, 0)	R	R
Object_Name	CharacterString	“RoomTemperature_status”	R	R
Object_Type	BACnetObjectType	ANALOG_INPUT (0)	R	R
Present_Value	REAL	-10…50	R	R
Description	CharacterString	-	O	-
Device_Type	CharacterString	-	O	-
Status_Flags	BACnetStatusFlags	{FALSE, FALSE/TRUE, FALSE, FALSE}	R	R
Event_State	BACnetEventState	STATE_NORMAL (0)	R	R
Reliability	BACnetReliability	NO_FAULT_DETECTED (0), UNRELIABLE_OTHER (7)	O	R
Out_Of_Service	BOOLEAN	FALSE/TRUE	R	R
Update_Interval	Unsigned	-	O	-
Units	BACnetEngineeringUnits	Degrees Celsius (62) Degrees Fahrenheit (64)	R	R
Min_Pres_Value	REAL	-	O	-
Max_Pres_Value	REAL	-	O	-
Resolution	REAL	-	O	-
COV_Increment	REAL	0	O	W
Time_Delay	Unsigned	-	O	-
Notification_Class	Unsigned	-	O	-
High_Limit	REAL	-	O	-
Low_Limit	REAL	-	O	-
Deadband	REAL	-	O	-
Limit_Enable	BACnetLimitEnable	-	O	-
Event_Enable	BACnetEventTransitionBits	-	O	-
Acked_Transitions	BACnetEventTransitionBits	-	O	-
Notify_Type	BACnetNotifyType	-	O	-
Event_Time_Stamps	BACnetArray[N] of BACnetTimeStamp	-	O	-
Profile_Name	CharacterString	-	O	-

© HMS Industrial Networks S.L.U - All rights reserved
This information is subject to change without notice

5.3.13 RoomTemperature_command (Analog Output Object Type)

It sets the room temperature to be used on the Daikin Ac system. Check section 7.4 for more information.

Property Identifier	Property Datatype	Value	ASHRAE	IBOX
Object_Identifier	BACnetObjectIdentifier	(Analog Output, 1)	R	R
Object_Name	CharacterString	“RoomTemperature_command”	R	R
Object_Type	BACnetObjectType	ANALOG_INPUT (0)	R	R
Present_Value	REAL	-10…50	R	R
Description	CharacterString	-	O	-
Device_Type	CharacterString	-	O	-
Status_Flags	BACnetStatusFlags	{FALSE, FALSE, FALSE, FALSE}	R	R
Event_State	BACnetEventState	STATE_NORMAL (0)	R	R
Reliability	BACnetReliability	NO_FAULT_DETECTED (0)	O	R
Out_Of_Service	BOOLEAN	FALSE	R	R
Update_Interval	Unsigned	-	O	-
Units **	BACnetEngineeringUnits	Degrees Celsius (62) Degrees Fahrenheit (64)	R	R
Min_Pres_Value	REAL	-	O	-
Max_Pres_Value	REAL	-	O	-
Resolution	REAL	-	O	-
COV_Increment	REAL	0	O	W
Priority_Array	BACnetPriorityArray	BACnetPriorityArray	R	R
Relinquish_Default	Unsigned	22	R	R
Time_Delay	Unsigned	-	O	-
Notification_Class	Unsigned	-	O	-
High_Limit	REAL	-	O	-
Low_Limit	REAL	-	O	-
Deadband	REAL	-	O	-
Limit_Enable	BACnetLimitEnable	-	O	-
Event_Enable	BACnetEventTransitionBits	-	O	-
Acked_Transitions	BACnetEventTransitionBits	-	O	-
Notify_Type	BACnetNotifyType	-	O	-
Event_Time_Stamps	BACnetArray[N] of BACnetTimeStamp	-	O	-
Profile_Name	CharacterString	-	O	-

** Use of Celsius or Fahrenheits units can be selected throught the switch configuration. Check section 6.1 for more information.

© HMS Industrial Networks S.L.U - All rights reserved
This information is subject to change without notice

5.3.14 ErrorCode (Analog Input Object Type)

It indicates the current error present in the AC system.

Property Identifier	Property Datatype	Value	ASHRAE	IBOX
Object_Identifier	BACnetObjectIdentifier	(Analog Input, 2)	R	R
Object_Name	CharacterString	“ErrorCode”	R	R
Object_Type	BACnetObjectType	ANALOG_INPUT (0)	R	R
Present_Value	REAL	-1… 349*	R	R
Description	CharacterString	-	O	-
Device_Type	CharacterString	-	O	-
Status_Flags	BACnetStatusFlags	{FALSE, FALSE, FALSE, FALSE}	R	R
Event_State	BACnetEventState	STATE_NORMAL (0)	R	R
Reliability	BACnetReliability	NO_FAULT_DETECTED (0)	O	R
Out_Of_Service	BOOLEAN	FALSE	R	R
Update_Interval	Unsigned	300	O	-
Units	BACnetEngineeringUnits	NO_UNITS (95)	R	R
Min_Pres_Value	REAL	-	O	-
Max_Pres_Value	REAL	-	O	-
Resolution	REAL	-	O	-
COV_Increment	REAL	0	O	W
Time_Delay	Unsigned	-	O	-
Notification_Class	Unsigned	-	O	-
High_Limit	REAL	-	O	-
Low_Limit	REAL	-	O	-
Deadband	REAL	-	O	-
Limit_Enable	BACnetLimitEnable	-	O	-
Event_Enable	BACnetEventTransitionBits	-	O	-
Acked_Transitions	BACnetEventTransitionBits	-	O	-
Notify_Type	BACnetNotifyType	-	O	-
Event_Time_Stamps	BACnetArray[N] of BACnetTimeStamp	-	O	-
Profile_Name	CharacterString	-	O	-

* Check section 11 for more information about each error code.

© HMS Industrial Networks S.L.U - All rights reserved
This information is subject to change without notice

5.3.15 ErrorCodeM (Multistate Input Object Type)

It indicates the current error present in the AC system.

Property Identifier	Property Datatype	Value	ASHRAE	IBOX
Object_Identifier	BACnetObjectIdentifier	(Multi-state Input, 4)	R	R
Object_Name	CharacterString	"ErrorCodeM"	R	R
Object_Type	BACnetObjectType	MULTISTATE_INPUT (13)	R	R
Present_Value	Unsigned	1 ~ 156	R	R
Description	CharacterString	-	O	-
Device_Type	CharacterString	-	O	-
Status_Flags	BACnetStatusFlags	{FALSE, FALSE, FALSE, FALSE}	R	R
Event_State	BACnetEventState	STATE_NORMAL (0)	R	R
Reliability	BACnetReliability	NO_FAULT_DETECTED (0)	O	R
Out_Of_Service	BOOLEAN	FALSE	R	R
Number_Of_States	Unsigned	156	R	R
State_Text	BACnetArray[N] of CharacterString	*Check the **Error Code** table below*	O	R
Time_Delay	Unsigned	-	O	-
Notification_Class	Unsigned	-	O	-
Alarm_Values	List of Unsigned	-	O	-
Fault_Values	List of Unsigned	-	O	-
Event_Enable	BACnetEventTransitionBits	-	O	-
Acked_Transitions	BACnetEventTransitionBits	-	O	-
Notify_Type	BACnetNotifyType	-	O	-
Event_Time_Stamps	BACnetArray[N] of BACnetTimeStamp	-	O	-
Profile_Name	CharacterString	-	O	-

© HMS Industrial Networks S.L.U - All rights reserved
This information is subject to change without notice

Error Code table

In the table below you will find the error correspondence value.

Present_Value	State_Text
1	
2	CommError
3	A0
4	A1
5	A2
6	A3
7	A4
8	A5
9	A6
10	A7
11	A8
12	A9
13	AA
14	AH
15	AJ
16	AE
17	AF
18	C0
19	C3
20	C4
21	C5
22	C6
23	C7
24	C8
25	C9
26	CA
27	CH
28	CC
29	CJ
30	CE
31	CF
32	E0
33	E1
34	E3
35	E4
36	E5
37	E6
38	E7
39	E8
40	E9
41	EA
42	EH
43	EC
44	EJ
45	EE
46	EF
47	H0
48	H1
49	H2
50	H3
51	H4
52	H5
53	H6

Present_Value	State_Text
54	H7
55	H8
56	H9
57	HA
58	HH
59	HC
60	HE
61	HF
62	F0
63	F1
64	F2
65	F3
66	F6
67	FA
68	FH
69	FC
70	FE
71	FF
72	J0
73	J1
74	J2
75	J3
76	J4
77	J5
78	J6
79	J7
80	J8
81	J9
82	JA
83	JH
84	JC
85	J3
86	JF
87	L0
88	L3
89	L4
90	L5
91	L6
92	L7
93	L8
94	L9
95	LA
96	LC
97	P0
98	P1
99	P3
100	P4
101	P5
102	P6
103	P7
104	PJ
105	U0
106	U1

Present_Value	State_Text
107	U2
108	U3
109	U4
110	U5
111	U6
112	U7
113	U8
114	U9
115	UA
116	UH
117	UC
118	UJ
119	UE
120	UF
121	60
122	61
123	62
124	63
125	64
126	65
127	68
128	6A
129	6H
130	6C
131	6J
132	6E
133	6F
134	51
135	52
136	53
137	54
138	40
139	41
140	42
141	43
142	44
143	31
144	32
145	33
146	34
147	35
148	36
149	3A
150	3H
151	3C
152	M2
153	M8
154	MA
155	MC
156	UNKNOWN

Check section 11 for more information about each error code.

© HMS Industrial Networks S.L.U - All rights reserved
This information is subject to change without notice

5.3.16 ErrorActive (Binary Input Object Type)

It indicates if there is an active error in the indoor unit.

Property Identifier	Property Datatype	Value	ASHRAE	IBOX
Object_Identifier	BACnetObjectIdentifier	(Binary Input, 1)	R	R
Object_Name	CharacterString	“ErrorActive”	R	R
Object_Type	BACnetObjectType	BINARY_INPUT (3)	R	R
Present_Value	BACnetBinaryPV	INACTIVE (0) / ACTIVE (1)	R	R
Description	CharacterString	-	O	-
Device_Type	CharacterString	-	O	-
Status_Flags	BACnetStatusFlags	{FALSE, FALSE, FALSE, FALSE}	R	R
Event_State	BACnetEventState	STATE_NORMAL (0)	R	R
Reliability	BACnetReliability	NO_FAULT_DETECTED (0)	O	R
Out_Of_Service	BOOLEAN	FALSE	R	R
Polarity	BACnetPolarity	NORMAL (0)	R	R
Inactive_Text	CharacterString	"No"	O	R
Active_Text	CharacterString	“Error”	O	R
Change_Of_State_Time	BACnetDatetime	-	O	-
Change_Of_State_Count	Unsigned	-	O	-
Time_Of_State_Count_Reset	BACnetDatetime	-	O	-
Elapsed_Active_Time	Unsigned	-	O	-
Time_Of_Active_Time_Reset	BACnetDatetime	-	O	-
Time_Delay	Unsigned	-	O	-
Notification_Class	Unsigned	-	O	-
Alarm_Value	BACnetBinaryPV	-	O	-
Event_Enable	BACnetEventTransitionBits	-	O	-
Acked_Transitions	BACnetEventTransitionBits	-	O	-
Notify_Type	BACnetNotifyType	-	O	-
Event_Time_Stamps	BACnetArray[N] of BACnetTimeStamp	-	O	-
Profile_Name	CharacterString	-	O	-

© HMS Industrial Networks S.L.U - All rights reserved
This information is subject to change without notice

5.3.17 ErrorAddress (Analog Input Object Type)

It indicates the indoor unit address where the error is active.

Property Identifier	Property Datatype	Value	ASHRAE	IBOX
Object_Identifier	BACnetObjectIdentifier	(Analog Input, 4)	R	R
Object_Name	CharacterString	“ErrorAddress”	R	R
Object_Type	BACnetObjectType	ANALOG_INPUT (0)	R	R
Present_Value	REAL		R	R
Description	CharacterString	-	O	-
Device_Type	CharacterString	-	O	-
Status_Flags	BACnetStatusFlags	{FALSE, FALSE/TRUE, FALSE, FALSE}	R	R
Event_State	BACnetEventState	STATE_NORMAL (0)	R	R
Reliability	BACnetReliability	NO_FAULT_DETECTED (0), UNRELIABLE_OTHER (7)	O	R
Out_Of_Service	BOOLEAN	FALSE/TRUE	R	R
Update_Interval	Unsigned	-	O	-
Units	BACnetEngineeringUnits	-	R	R
Min_Pres_Value	REAL	-	O	-
Max_Pres_Value	REAL	-	O	-
Resolution	REAL	-	O	-
COV_Increment	REAL	0	O	W
Time_Delay	Unsigned	-	O	-
Notification_Class	Unsigned	-	O	-
High_Limit	REAL	-	O	-
Low_Limit	REAL	-	O	-
Deadband	REAL	-	O	-
Limit_Enable	BACnetLimitEnable	-	O	-
Event_Enable	BACnetEventTransitionBits	-	O	-
Acked_Transitions	BACnetEventTransitionBits	-	O	-
Notify_Type	BACnetNotifyType	-	O	-
Event_Time_Stamps	BACnetArray[N] of BACnetTimeStamp	-	O	-
Profile_Name	CharacterString	-	O	-

© HMS Industrial Networks S.L.U - All rights reserved
This information is subject to change without notice

5.3.18 OnTimeCounter (Analog Value Object Type)

It indicates the amount of time the units have been running.

Property Identifier	Property Datatype	Value	ASHRAE	IBOX
Object_Identifier	BACnetObjectIdentifier	(Analog Value, 0)	R	R
Object_Name	CharacterString	“OnTimeCounter”	R	R
Object_Type	BACnetObjectType	ANALOG_VALUE (2)	R	R
Present_Value	REAL	0 .. 65535	R	R
Description	CharacterString	-	O	-
Status_Flags	BACnetStatusFlags	{FALSE, FALSE, FALSE, FALSE}	R	R
Event_State	BACnetEventState	STATE_NORMAL (0)	R	R
Reliability	BACnetReliability	NO_FAULT_DETECTED (0)	O	R
Out_Of_Service	BOOLEAN	FALSE	R	R
Update_Interval	Unsigned	-	O	-
Units	BACnetEngineeringUnits	Hours (71)	R	R
Min_Pres_Value	REAL	-	O	-
Max_Pres_Value	REAL	-	O	-
Resolution	REAL	-	O	-
COV_Increment	REAL	0	O	W
Time_Delay	Unsigned	-	O	-
Notification_Class	Unsigned	-	O	-
High_Limit	REAL	-	O	-
Low_Limit	REAL	-	O	-
Deadband	REAL	-	O	-
Limit_Enable	BACnetLimitEnable	-	O	-
Event_Enable	BACnetEventTransitionBits	-	O	-
Acked_Transitions	BACnetEventTransitionBits	-	O	-
Notify_Type	BACnetNotifyType	-	O	-
Event_Time_Stamps	BACnetArray[N] of BACnetTimeStamp	-	O	-
Profile_Name	CharacterString	-	O	-

© HMS Industrial Networks S.L.U - All rights reserved
This information is subject to change without notice

5.3.19 Occupancy (Multistate Value Object Type)

It indicates the use or not of the occupancy function. Check section 7.5 for more information.

Property Identifier	Property Datatype	Value	ASHRAE	IBOX
Object_Identifier	BACnetObjectIdentifier	(Multi-state Output, 0)	R	R
Object_Name	CharacterString	“Occupancy”	R	R
Object_Type	BACnetObjectType	MULTISTATE_VALUE (19)	R	R
Present_Value	Unsigned	1 ~ 3	W	W
Description	CharacterString	-	O	-
Status_Flags	BACnetStatusFlags	{FALSE, FALSE, FALSE, FALSE}	R	R
Event_State	BACnetEventState	STATE_NORMAL (0)	R	R
Reliability	BACnetReliability	NO_FAULT_DETECTED (0)	O	R
Out_Of_Service	BOOLEAN	FALSE	R	R
Number_Of_States	Unsigned	3	R	R
State_Text	BACnetArray[N] of CharacterString	*Check the **Occupancy setting** table below*	O	R
Priority_Array	BACnetPriorityArray	-	R	-
Relinquish_Default	Unsigned	-	R	-
Time_Delay	Unsigned	-	O	-
Notification_Class	Unsigned	-	O	-
Alarm_Value	Unsigned	-	O	-
Fault_Value	Unsigned		O	-
Event_Enable	BACnetEventTransitionBits	-	O	-
Acked_Transitions	BACnetEventTransitionBits	-	O	-
Notify_Type	BACnetNotifyType	-	O	-
Event_Time_Stamps	BACnetArray[N] of BACnetTimeStamp	-	O	-
Profile_Name	CharacterString	-	O	-

Occupancy values table

Check possible Occupancy values in the following correspondence table.

Present_Value	Contents displayed in State_Text
1	Occupied
2	Unoccupied
3	Disabled

© HMS Industrial Networks S.L.U - All rights reserved
This information is subject to change without notice

5.3.20 OccupiedCoolSetPoint (Analog Value Object Type)

It indicates the current Setpoint when Cool mode is selected, and Occupancy is enabled and the room is occupied. Check section 7.5 for more information.

Property Identifier	Property Datatype	Value	ASHRAE	IBOX
Object_Identifier	BACnetObjectIdentifier	(Analog Value, 1)	R	R
Object_Name	CharacterString	“OccupiedCoolSetPoint”	R	R
Object_Type	BACnetObjectType	ANALOG_VALUE (2)	R	R
Present_Value	REAL	16 .. 32°C 60 .. 90°F	R	R
Description	CharacterString	-	O	-
Status_Flags	BACnetStatusFlags	{FALSE, FALSE, FALSE, FALSE}	R	R
Event_State	BACnetEventState	STATE_NORMAL (0)	R	R
Reliability	BACnetReliability	NO_FAULT_DETECTED (0)	O	R
Out_Of_Service	BOOLEAN	FALSE	R	R
Update_Interval	Unsigned	-	O	-
Units **	BACnetEngineeringUnits	Degrees Celsius (62) Degrees Fahrenheit (64)	R	R
Min_Pres_Value	REAL	-	O	-
Max_Pres_Value	REAL	-	O	-
Resolution	REAL	-	O	-
COV_Increment	REAL	0	O	W
Time_Delay	Unsigned	-	O	-
Notification_Class	Unsigned	-	O	-
High_Limit	REAL	-	O	-
Low_Limit	REAL	-	O	-
Deadband	REAL	-	O	-
Limit_Enable	BACnetLimitEnable	-	O	-
Event_Enable	BACnetEventTransitionBits	-	O	-
Acked_Transitions	BACnetEventTransitionBits	-	O	-
Notify_Type	BACnetNotifyType	-	O	-
Event_Time_Stamps	BACnetArray[N] of BACnetTimeStamp	-	O	-
Profile_Name	CharacterString	-	O	-

** Use of Celsius or Fahrenheits units can be selected throught the switch configuration. Check section 6.1 for more information.

© HMS Industrial Networks S.L.U - All rights reserved
This information is subject to change without notice

5.3.21 OccupiedHeatSetPoint (Analog Value Object Type)

It indicates the current Setpoint when Heat mode is selected, and Occupancy is enabled and the room is occupied. Check section 7.5 for more information.

Property Identifier	Property Datatype	Value	ASHRAE	IBOX
Object_Identifier	BACnetObjectIdentifier	(Analog Value, 2)	R	R
Object_Name	CharacterString	“OccupiedHeatSetPoint”	R	R
Object_Type	BACnetObjectType	ANALOG_VALUE (2)	R	R
Present_Value	REAL	16 .. 32°C 60 .. 90°F	R	R
Description	CharacterString	-	O	-
Status_Flags	BACnetStatusFlags	{FALSE, FALSE, FALSE, FALSE}	R	R
Event_State	BACnetEventState	STATE_NORMAL (0)	R	R
Reliability	BACnetReliability	NO_FAULT_DETECTED (0)	O	R
Out_Of_Service	BOOLEAN	FALSE	R	R
Update_Interval	Unsigned	-	O	-
Units **	BACnetEngineeringUnits	Degrees Celsius (62) Degrees Fahrenheit (64)	R	R
Min_Pres_Value	REAL	-	O	-
Max_Pres_Value	REAL	-	O	-
Resolution	REAL	-	O	-
COV_Increment	REAL	0	O	W
Time_Delay	Unsigned	-	O	-
Notification_Class	Unsigned	-	O	-
High_Limit	REAL	-	O	-
Low_Limit	REAL	-	O	-
Deadband	REAL	-	O	-
Limit_Enable	BACnetLimitEnable	-	O	-
Event_Enable	BACnetEventTransitionBits	-	O	-
Acked_Transitions	BACnetEventTransitionBits	-	O	-
Notify_Type	BACnetNotifyType	-	O	-
Event_Time_Stamps	BACnetArray[N] of BACnetTimeStamp	-	O	-
Profile_Name	CharacterString	-	O	-

** Use of Celsius or Fahrenheits units can be selected throught the switch configuration. Check section 6.1 for more information.

© HMS Industrial Networks S.L.U - All rights reserved
This information is subject to change without notice

5.3.22 UnoccupiedCoolSetPoint (Analog Value Object Type)

It indicates the current Setpoint when Cool mode is selected, and Occupancy is enabled and the room is unoccupied. Check section 7.5 for more information.

Property Identifier	Property Datatype	Value	ASHRAE	IBOX
Object_Identifier	BACnetObjectIdentifier	(Analog Value, 3)	R	R
Object_Name	CharacterString	"UnoccupiedCoolSetPoint"	R	R
Object_Type	BACnetObjectType	ANALOG_VALUE (2)	R	R
Present_Value	REAL	16 .. 32°C 60 .. 90°F	R	R
Description	CharacterString	-	O	-
Status_Flags	BACnetStatusFlags	{FALSE, FALSE, FALSE, FALSE}	R	R
Event_State	BACnetEventState	STATE_NORMAL (0)	R	R
Reliability	BACnetReliability	NO_FAULT_DETECTED (0)	O	R
Out_Of_Service	BOOLEAN	FALSE	R	R
Update_Interval	Unsigned	-	O	-
Units **	BACnetEngineeringUnits	Degrees Celsius (62) Degrees Fahrenheit (64)	R	R
Min_Pres_Value	REAL	-	O	-
Max_Pres_Value	REAL	-	O	-
Resolution	REAL	-	O	-
COV_Increment	REAL	0	O	W
Time_Delay	Unsigned	-	O	-
Notification_Class	Unsigned	-	O	-
High_Limit	REAL	-	O	-
Low_Limit	REAL	-	O	-
Deadband	REAL	-	O	-
Limit_Enable	BACnetLimitEnable	-	O	-
Event_Enable	BACnetEventTransitionBits	-	O	-
Acked_Transitions	BACnetEventTransitionBits	-	O	-
Notify_Type	BACnetNotifyType	-	O	-
Event_Time_Stamps	BACnetArray[N] of BACnetTimeStamp	-	O	-
Profile_Name	CharacterString	-	O	-

** Use of Celsius or Fahrenheits units can be selected throught the switch configuration. Check section 6.1 for more information.

© HMS Industrial Networks S.L.U - All rights reserved
This information is subject to change without notice

5.3.23 UnoccupiedHeatSetPoint (Analog Value Object Type)

It indicates the current Setpoint when Heat mode is selected, and Occupancy is enabled and the room is unoccupied. Check section 7.5 for more information.

Property Identifier	Property Datatype	Value	ASHRAE	IBOX
Object_Identifier	BACnetObjectIdentifier	(Analog Value, 4)	R	R
Object_Name	CharacterString	“UnoccupiedHeatSetPoint”	R	R
Object_Type	BACnetObjectType	ANALOG_VALUE (2)	R	R
Present_Value	REAL	16 .. 32°C 60 .. 90°F	R	R
Description	CharacterString	-	O	-
Status_Flags	BACnetStatusFlags	{FALSE, FALSE, FALSE, FALSE}	R	R
Event_State	BACnetEventState	STATE_NORMAL (0)	R	R
Reliability	BACnetReliability	NO_FAULT_DETECTED (0)	O	R
Out_Of_Service	BOOLEAN	FALSE	R	R
Update_Interval	Unsigned	-	O	-
Units **	BACnetEngineeringUnits	Degrees Celsius (62) Degrees Fahrenheit (64)	R	R
Min_Pres_Value	REAL	-	O	-
Max_Pres_Value	REAL	-	O	-
Resolution	REAL	-	O	-
COV_Increment	REAL	0	O	W
Time_Delay	Unsigned	-	O	-
Notification_Class	Unsigned	-	O	-
High_Limit	REAL	-	O	-
Low_Limit	REAL	-	O	-
Deadband	REAL	-	O	-
Limit_Enable	BACnetLimitEnable	-	O	-
Event_Enable	BACnetEventTransitionBits	-	O	-
Acked_Transitions	BACnetEventTransitionBits	-	O	-
Notify_Type	BACnetNotifyType	-	O	-
Event_Time_Stamps	BACnetArray[N] of BACnetTimeStamp	-	O	-
Profile_Name	CharacterString	-	O	-

** Use of Celsius or Fahrenheits units can be selected throught the switch configuration. Check section 6.1 for more information.

© HMS Industrial Networks S.L.U - All rights reserved
This information is subject to change without notice

5.3.24 OccupancyContinuousCheck (Binary Value Object Type)

It indicates if the system is continuously checking the setpoint and occupancy conditions. Check section 7.5 for more information.

Property Identifier	Property Datatype	Value	ASHRAE	IBOX
Object_Identifier	BACnetObjectIdentifier	(Binary Value, 0)	R	R
Object_Name	CharacterString	“OccupancyContinuousCheck”	R	R
Object_Type	BACnetObjectType	BINARY_VALUE (5)	R	R
Present_Value	BACnetBinaryPV	INACTIVE (0) / ACTIVE (1)	W	W
Description	CharacterString	-	O	-
Status_Flags	BACnetStatusFlags	{FALSE, FALSE, FALSE, FALSE}	R	R
Event_State	BACnetEventState	STATE_NORMAL (0)	R	R
Reliability	BACnetReliability	NO_FAULT_DETECTED (0)	O	R
Out_Of_Service	BOOLEAN	FALSE	R	R
Inactive_Text	CharacterString	"Disabled"	O	R
Active_Text	CharacterString	“Enabled"	O	R
Change_Of_State_Time	BACnetDatetime	-	O	-
Change_Of_State_Count	Unsigned	-	O	-
Time_Of_State_Count_Reset	BACnetDatetime	-	O	-
Elapsed_Active_Time	Unsigned	-	O	-
Time_Of_Active_Time_Reset	BACnetDatetime	-	O	-
Minimum_Off_Time	Unsigned32	-	O	-
Minimum_On_Time	Unsigned32	-	O	-
Priority_Array	BACnetPriorityArray	BACnetPriorityArray	R	-
Relinquish_Default	BACnetBinaryPV	INACTIVE (0)	R	-
Time_Delay	Unsigned	-	O	-
Notification_Class	Unsigned	-	O	-
Alarm_Value	BACnetBinaryPV	-	O	-
Event_Enable	BACnetEventTransitionBits	-	O	-
Acked_Transitions	BACnetEventTransitionBits	-	O	-
Notify_Type	BACnetNotifyType	-	O	-
Event_Time_Stamps	BACnetArray[N] of BACnetTimeStamp	-	O	-
Profile_Name	CharacterString	-	O	-

© HMS Industrial Networks S.L.U - All rights reserved
This information is subject to change without notice

5.3.25 UnoccupiedDeadbandAction (Binary Value Object Type)

It indicates the action to be performed by the system when Unoccupancy is enabled and Room Temperature is within the deadband. Check section 7.5 for more information.

Property Identifier	Property Datatype	Value	ASHRAE	IBOX
Object_Identifier	BACnetObjectIdentifier	(Binary Value, 1)	R	R
Object_Name	CharacterString	“UnoccupiedDeadbandAction”	R	R
Object_Type	BACnetObjectType	BINARY_VALUE (5)	R	R
Present_Value	BACnetBinaryPV	INACTIVE (0) / ACTIVE (1)	W	W
Description	CharacterString	-	O	-
Status_Flags	BACnetStatusFlags	{FALSE, FALSE, FALSE, FALSE}	R	R
Event_State	BACnetEventState	STATE_NORMAL (0)	R	R
Reliability	BACnetReliability	NO_FAULT_DETECTED (0)	O	R
Out_Of_Service	BOOLEAN	FALSE	R	R
Inactive_Text	CharacterString	"Off"	O	R
Active_Text	CharacterString	“CurrentMode"	O	R
Change_Of_State_Time	BACnetDatetime	-	O	-
Change_Of_State_Count	Unsigned	-	O	-
Time_Of_State_Count_Reset	BACnetDatetime	-	O	-
Elapsed_Active_Time	Unsigned	-	O	-
Time_Of_Active_Time_Reset	BACnetDatetime	-	O	-
Minimum_Off_Time	Unsigned32	-	O	-
Minimum_On_Time	Unsigned32	-	O	-
Priority_Array	BACnetPriorityArray	BACnetPriorityArray	R	-
Relinquish_Default	BACnetBinaryPV	INACTIVE (0)	R	-
Time_Delay	Unsigned	-	O	-
Notification_Class	Unsigned	-	O	-
Alarm_Value	BACnetBinaryPV	-	O	-
Event_Enable	BACnetEventTransitionBits	-	O	-
Acked_Transitions	BACnetEventTransitionBits	-	O	-
Notify_Type	BACnetNotifyType	-	O	-
Event_Time_Stamps	BACnetArray[N] of BACnetTimeStamp	-	O	-
Profile_Name	CharacterString	-	O	-

© HMS Industrial Networks S.L.U - All rights reserved
This information is subject to change without notice

5.3.26 LockRemoteControl (Binary Value Object Type)

It is used to lock or unlock the Daikin wired Remote Controller.

Property Identifier	Property Datatype	Value	ASHRAE	IBOX
Object_Identifier	BACnetObjectIdentifier	(Binary Value, 2)	R	R
Object_Name	CharacterString	“LockRemoteControl”	R	R
Object_Type	BACnetObjectType	BINARY_VALUE (5)	R	R
Present_Value	BACnetBinaryPV	INACTIVE (0) / ACTIVE (1)	W	W
Description	CharacterString	-	O	-
Status_Flags	BACnetStatusFlags	{FALSE, FALSE, FALSE, FALSE}	R	R
Event_State	BACnetEventState	STATE_NORMAL (0)	R	R
Reliability	BACnetReliability	NO_FAULT_DETECTED (0)	O	R
Out_Of_Service	BOOLEAN	FALSE	R	R
Inactive_Text	CharacterString	"Unlocked"	O	R
Active_Text	CharacterString	“Locked"	O	R
Change_Of_State_Time	BACnetDatetime	-	O	-
Change_Of_State_Count	Unsigned	-	O	-
Time_Of_State_Count_Reset	BACnetDatetime	-	O	-
Elapsed_Active_Time	Unsigned	-	O	-
Time_Of_Active_Time_Reset	BACnetDatetime	-	O	-
Minimum_Off_Time	Unsigned32	-	O	-
Minimum_On_Time	Unsigned32	-	O	-
Priority_Array	BACnetPriorityArray	BACnetPriorityArray	R	-
Relinquish_Default	BACnetBinaryPV	INACTIVE (0)	R	-
Time_Delay	Unsigned	-	O	-
Notification_Class	Unsigned	-	O	-
Alarm_Value	BACnetBinaryPV	-	O	-
Event_Enable	BACnetEventTransitionBits	-	O	-
Acked_Transitions	BACnetEventTransitionBits	-	O	-
Notify_Type	BACnetNotifyType	-	O	-
Event_Time_Stamps	BACnetArray[N] of BACnetTimeStamp	-	O	-
Profile_Name	CharacterString	-	O	-

© HMS Industrial Networks S.L.U - All rights reserved
This information is subject to change without notice

5.3.27 ThermostatON (Binary Input Object Type)

It indicates if the AC system is currently working or not according to the set point temperatures selected. Please do not confuse with On/Off function.

Property Identifier	Property Datatype	Value	ASHRAE	IBOX
Object_Identifier	BACnetObjectIdentifier	(Binary Input, 7)	R	R
Object_Name	CharacterString	“ThermostatON”	R	R
Object_Type	BACnetObjectType	BINARY_INPUT (3)	R	R
Present_Value	BACnetBinaryPV	INACTIVE (0) / ACTIVE (1)	R	R
Description	CharacterString	-	O	-
Device_Type	CharacterString	-	O	-
Status_Flags	BACnetStatusFlags	{FALSE, FALSE/TRUE, FALSE, FALSE}	R	R
Event_State	BACnetEventState	STATE_NORMAL (0)	R	R
Reliability	BACnetReliability	NO_FAULT_DETECTED (0), UNRELIABLE_OTHER (7)	O	R
Out_Of_Service	BOOLEAN	FALSE	R	R
Polarity	BACnetPolarity	NORMAL (0)	R	R
Inactive_Text	CharacterString	"Off"	O	R
Active_Text	CharacterString	“On”	O	R
Change_Of_State_Time	BACnetDatetime	-	O	-
Change_Of_State_Count	Unsigned	-	O	-
Time_Of_State_Count_Reset	BACnetDatetime	-	O	-
Elapsed_Active_Time	Unsigned	-	O	-
Time_Of_Active_Time_Reset	BACnetDatetime	-	O	-
Time_Delay	Unsigned	-	O	-
Notification_Class	Unsigned	-	O	-
Alarm_Value	BACnetBinaryPV	-	O	-
Event_Enable	BACnetEventTransitionBits	-	O	-
Acked_Transitions	BACnetEventTransitionBits	-	O	-
Notify_Type	BACnetNotifyType	-	O	-
Event_Time_Stamps	BACnetArray[N] of BACnetTimeStamp	-	O	-
Profile_Name	CharacterString	-	O	-

© HMS Industrial Networks S.L.U - All rights reserved
This information is subject to change without notice

6 Connections and switches

6.1 *Connect to the Remote Controller bus*

Disconnect the Daikin system from Mains Power

Connect the interface to the P1P2 bus at any point of the bus. The P1P2 bus is the bus that connects the AC indoor unit and the wired remote controller, is a two-wire bus connecting terminals P1 and P2 of both. This P1P2 connection has no specific polarity.

⚠ ***Important***: Do not modify the length of the cable supplied with the interface, it may affect to the correct operation of the interface.

⚠ ***Important***: If a wired remote controller of the AC manufacturer is connected in the same bus, communication may shut down. In case this happens, please use the USB connector to power the device to overcome this situation.

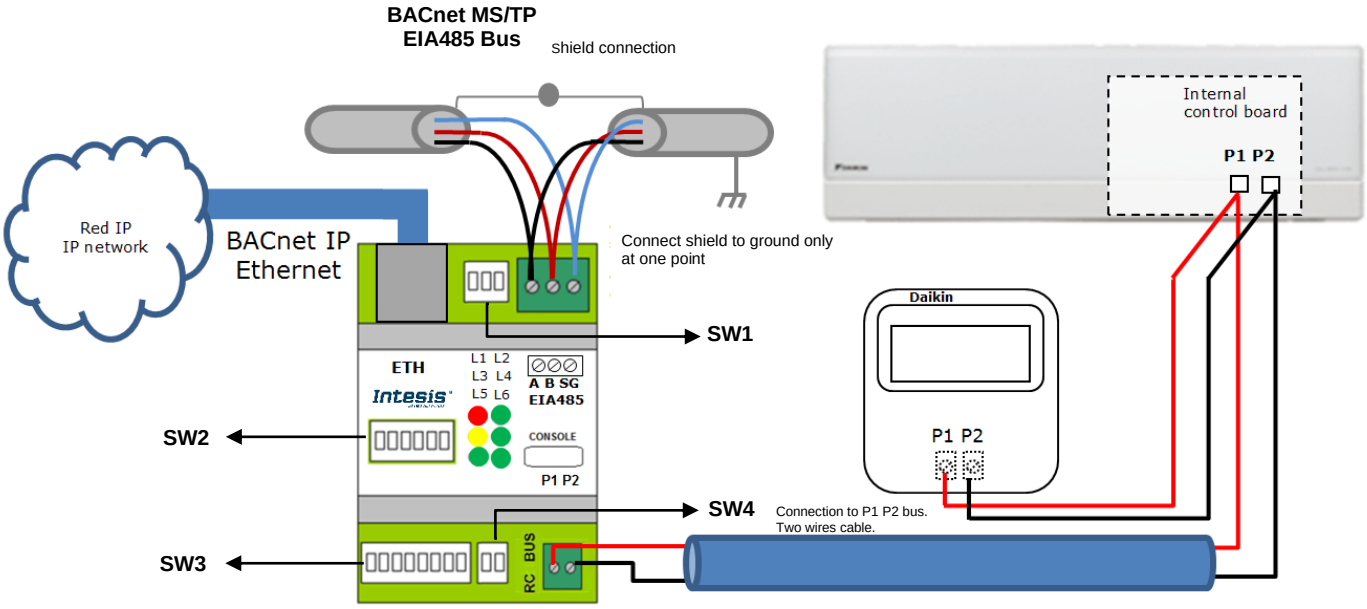

Connection diagram

If a Daikin remote controller (RC) is present and connected to the P1P2 bus, there are two configuration options:

- If we want to use the RC as master, its PCB switch must be set at "M" position and the INBACDAI001R000 must be configured as slave.
- If we want to use the RC as slave, its PCB switch must be set at "S" position and the INBACDAI001R000 must be configured as master.

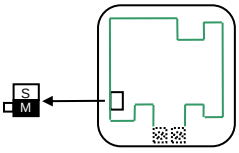

Daikin RC PCB backside, MAIN/SUB switch

SW4 – Master/Slave settings

Binary value $b_1 \ldots b_0$	Decimal value	Switches 1 2	Description
0x	0	↓ x	Slave in P1P2 bus (default value)
1x	1	↑ x	Master in P1P2 bus

© HMS Industrial Networks S.L.U - All rights reserved
This information is subject to change without notice

Special mention must be made with the use of Daikin's IR wireless remote controllers, in this case Daikin's IR must be slave and the INBACDAI001R000 must be master, otherwise not all the features will be available from BACnet. Please, check the configuration for the AC unit to ensure proper control of the AC unit according to its specifications. Use **SW3** for the Celsius/Fahrenheit degrees selection and **SW4** for the Reference Temperature (Room temperature) to be used. More information about it can be found on section 7.4.

SW3 - Celsius/Fahrenheit selection

Binary value $b_7 \ldots b_0$	Decimal value	Switches 1 2 3 4 5 6 7 8	Description
xxxx0xxx	0	x x x x ↓ x x x	Celsius degrees (default value)
xxxx1xxx	1	x x x x ↑ x x x	Fahrenheit degrees

SW4 – Ref. Temp settings

Binary value $b_1 \ldots b_0$	Decimal value	Switches 1 2	Description
x0	0	x ↓	Indoor Unit Ref. Temp. (default value)
x1	1	x ↑	Daikin Controler Ref. Temp.

⚠ ***Important***: Remember that switch changes only apply after an Intesis power cycle

© HMS Industrial Networks S.L.U - All rights reserved
This information is subject to change without notice

6.2 *Connect to BACnet MS/TP*

Connect the EIA485 bus wires to the plug-in terminal block (EIA485) of INBACDAI001R000; respect the polarity on this connection (A+ and B-).

Connect the ground signal to the plug-in terminal block (SG).

Respect the maximum distance of 1.200 meters for the bus, no loop or star topologies are allowed for EIA485 bus.

EIA-485 bus. Termination resistors and Fail-Safe Biasing mechanism

EIA-485 bus requires a 120Ω terminator resistor at each end of the bus to avoid signal reflections.

In order to prevent fail status detections by the receivers, which are *"listening"* to the bus, when all the transmitters' outputs are in three-state (high impedance), a fail-safe biasing mechanism is required. This mechanism provides a safe status (a correct voltage level) in the bus when all the transmitters' outputs are in three-state.

The INBACDAI001R000 gateway includes an on-board terminator resistor of 120Ω that can be connected to the EIA-485 bus by using DIP switch SW1.

Some BACnet MS/TP EIA-485 Master devices can provide also internal 120Ω terminator resistor and/or fail-safe biasing. Check the technical documentation of the Master device connected to the EIA-485 network in each case.

SW1 settings

Binary value $b_2 \ldots b_0$	Decimal value	Switches 1 2 3	Description
0xx	**0**	↓ x x	EIA485 bus without termination resistor. The gateway is not at one end of the EIA485 bus (default value)
1xx	**1**	↑ x x	120 Ω termination resistor active. The gateway is at one end of the EIA485 bus
x00	**0**	x ↓ ↓	No bus polarization
x11	**3**	x ↑ ↑	Bus polarization active

Please also check the configuration on **SW2** and **SW3** before connecting to BACnet MS/TP.

6.2.1 MS/TP MAC address switch configuration

MAC address can be configured using **SW2** DIP-Switch

Binary value $b_7 \ldots b_0$	Decimal value	Switches 1	2	3	4	5	6	7	8	MAC address
0000000x	0	↓	↓	↓	↓	↓	↓	↓	x	0
1000000x	1	↑	↓	↓	↓	↓	↓	↓	x	1
0100000x	2	↓	↑	↓	↓	↓	↓	↓	x	2
1100000x	3	↑	↑	↓	↓	↓	↓	↓	x	3
….	….	….								…
1011111x	125	↑	↓	↑	↑	↑	↑	↑	x	125
0111111x	126	↓	↑	↑	↑	↑	↑	↑	x	126
1111111x	127	↑	↑	↑	↑	↑	↑	↑	x	127

The MAC address selected my affect on the Device Instance. If the "Auto Device Instance" is used, keep in mind that the Device Instance will be build using the "Device Instance Base" + the address selected in SWP2 P1-P7. Please, check section 7.6 for more information.

© HMS Industrial Networks S.L.U - All rights reserved
This information is subject to change without notice

6.2.2 MS/TP activation and baudrate

Select the right baudrate for BACnet MS/TP communication using switch **SW3**.

Binary value $b_7 \ldots b_0$	Decimal value	Switches 1 2 3 4 5 6 7 8	Description
0xxxxxxx	**0**	↓ x x x x x x x	BACnet MS/TP active (default value)
1xxxxxxx	**1**	↑ x x x x x x x	BACnet IP active
x000xxxx	**0**	x ↓ ↓ ↓ x x x x	Autobaudrate (default value) *
x100xxxx	**1**	x ↑ ↓ ↓ x x x x	9600 bps
x010xxxx	**2**	x ↓ ↑ ↓ x x x x	192000 bps
x110xxxx	**3**	x ↑ ↑ ↓ x x x x	38400 bps
x001xxxx	**4**	x ↓ ↓ ↑ x x x x	57600 bps
x101xxxx	**5**	x ↑ ↓ ↑ x x x x	76800 bps
x011xxxx	**6**	x ↓ ↑ ↑ x x x x	115200 bps
x111xxxx	**7**	x ↑ ↑ ↑ x x x x	Autobaudrate *
xxxx0xxx	**0**	x x x x ↓ x x x	Celsius degrees (default value)
xxxx1xxx	**1**	x x x x ↑ x x x	Fahrenheit degrees

⚠ ***Important***: Remember that switch changes only apply after an Intesis power cycle.

* Note: If Autobaudrate is selected, the INBACDAI001R000 will look for another BACnet MS/TP device with a fixed baudrate in order to match this value. Once detected, the baudrate will not be modified until a device reset is produced.

6.3 *Connect to BACnet IP*

Connect the RJ45 connector to the Ethernet connection (ETH) of INBACDAI001R000.

Respect same recommendations as per any other Ethernet communication network.

Remember to activate the IP interface through the **SW3** switch.

Binary value $b_7 \ldots b_0$	Decimal value	Switches 1 2 3 4 5 6 7 8	Description
0xxxxxxx	**0**	↓ x x x x x x x	BACnet MS/TP active (default value)
1xxxxxxx	**1**	↑ x x x x x x x	BACnet IP active

By default, the INBACDAI001R000 comes with a static IP address: **192.168.100.246**.

In order to change it, please use the configuration tool and select either DHCP or another static IP (recommended) that suits your integration project requirements. Check section 7.6 for more information.

6.3.1 BACnet Device Instance

If the “Auto Device Instance” is used, keep in mind that the Device Instance will be build using the “Device Instance Base” + the address selected in SWP2 P1-P7.

Binary value $b_7 \ldots b_0$	Decimal value	Switches 1 2 3 4 5 6 7 8	MAC address
0000000x	0	↓ ↓ ↓ ↓ ↓ ↓ ↓ x	0
1000000x	1	↑ ↓ ↓ ↓ ↓ ↓ ↓ x	1
0100000x	2	↓ ↑ ↓ ↓ ↓ ↓ ↓ x	2
1100000x	3	↑ ↑ ↓ ↓ ↓ ↓ ↓ x	3
….	….	….	…
1011111x	125	↑ ↓ ↑ ↑ ↑ ↑ ↑ x	125
0111111x	126	↓ ↑ ↑ ↑ ↑ ↑ ↑ x	126
1111111x	127	↑ ↑ ↑ ↑ ↑ ↑ ↑ x	127

⚠ ***Important***: Remember that switch changes only apply after an Intesis power cycle.

© HMS Industrial Networks S.L.U - All rights reserved
This information is subject to change without notice

7.1 *Pre-requisites*

In a BACnet MS/TP integration, it is necessary to have the BACnet MS/TP Master device operative and well connected to the BACnet MS/TP port of the INBACDAI001R000.

In a BACnet IP integration, it is necessary to have the BACnet IP client operative and well connected to the IP network and the INBACDAI001R000 connected to this same IP network through the ETH port.

Items supplied by HMS Networks for this integration are:

- Intesis INBACDAI001R000 interface with Daikin AC external protocol firmware loaded
- Specific connection cable to connect Daikin AC unit with INBACDAI001R000 gateway
- MiniUSB cable for console communication and testing power supply usage
- Product documentation

7.2 *Physical checking*

First point to look at to make sure that gateway is working properly is to check physical connections:

1.- Make sure that the supplied cable is correctly connected between the AC unit and the gateway. INBACDAI001R000 needs to be connected to the AC unit or externaly powered before starting the device configuration. USB port can be used, along with an external USB power converter, to power the device for testing purposes if the AC unit is not present.

2.- Check that the AC unit is connected to mains.

3.- If using BACnet MS/TP, check the EIA485 connection from the gateway to the BACnet MS/TP. Remember to verify polarity and terminal resistors configuration. If using BACnet IP, check the IP network connections.

7.3 *LED status*

On start up, all leds blink once and then turn off. After that, depending on the type of connection (MS/TP or IP) and the processes carried out, LED status may change.

Please, check the table below for more information:

LED	Status	Description
L1 (red)	ON Steady	AC communication error
	Blinking	AC error
	Off	No errors present
L5 (green)	ON Steady	BACnet MS/TP link
	Blinking	Activity on the BACnet MS/TP bus
L6 (green)	ON Steady	Ethernet link
	Blinking	Activity on BACnet IP
L1+L4+L5	Blinking	Device in Bootloader mode
All	Blinking	Fatal Error
All	On Steady 1 sec	On start up (for testing purposes)

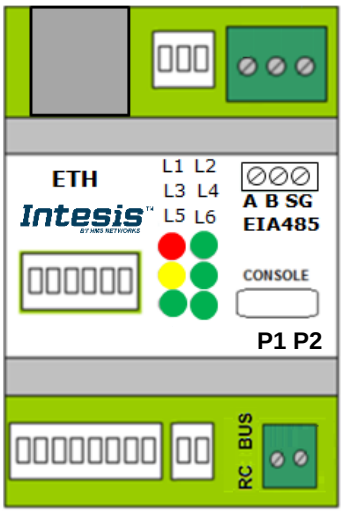

© HMS Industrial Networks S.L.U - All rights reserved
This information is subject to change without notice

7.4 *Room temperature*

Daikin indoor units have three different ways to be programmed in regards with the ambient temperature sensor.

1) The indoor unit uses its own return temperature.

2) The indoor unit uses its own return temperature when there is a big difference between the ambient temperature and the setpoint temperature. It uses the ambient temperature from the Master device (remote controller or INBACDAI001R000 device) when this difference is small.

3) It is only used the ambient temperature from the Master device (remote controller or INBACDAI001R000 device).

⚠ ***Important***: This configuration must be done by a Daikin qualified technician or installer

On the other hand, notice that the INBACDAI001R000 works in a different way regarding room temperature parameter depending if it is working in Master or Slave mode.

When the INBACDAI001R000 is set as **slave** (check section 6.1 for more information), the room temperature read in the Daikin bus is the one provided by the Daikin system itself, either from the Indoor Unit probe or the Daikin wired remote controller probe. As we have seen before, this will depend on the configuration of the system carried out by the installer. Moreover, when set as slave, the INBACDAI001R000 is not capable of setting the room temperature value in the Daiking bus, so the *RoomTemperature_command* object will not be active.

Remember that you need to set the right configuration for the SW4 switch.

SW4

Binary value $b_1 \ldots b_0$	Decimal value	Switches 1 2	Description	Effect
x0	**0**	**x ↓**	Indoor Unit Ref. Temp. (default value)	***RoomTemperature_status***: Indoor Unit temp sensor ***RoomTemperature_command***: Disabled
x1	**1**	**x ↑**	Daikin Controler Ref. Temp.	***RoomTemperature_status***: Remote controller temp sensor ***RoomTemperature_command***: Disabled

On the other hand, when the INBACDAI001R000 is set as **master** (check section 6.1 for more information), the room temperature read is the one provided by the Indoor Unit itself or from the INBACDAI001R000. In this case, the *RoomTemperature_command* object will be enabled allowing the set of the room temperature to the Daikin bus.

Remember that you need to set the right configuration for the SW4 switch.

SW4

Binary value $b_1 \ldots b_0$	Decimal value	Switches 1 2	Description	Effect
x0	**0**	**x ↓**	Indoor Unit Ref. Temp. (default value)	***RoomTemperature_status***: It will always correspond with the Indoor Unit temp sensor. ***RoomTemperature_command***: Enabled, but values will not apply.
x1	**1**	**x ↑**	Daikin Controler Ref. Temp.	***RoomTemperature_status***: It will initially report the Indoor Unit temperature. Once the temprature value is provided through the *RoomTemperature_command* object, the *RoomTemperature_status* and the *RoomTemperature_command* will be the same. ***RoomTemperature_command***: Enabled for Bacnet control on the room temperature.

© HMS Industrial Networks S.L.U - All rights reserved
This information is subject to change without notice

7.5 *Occupancy*

Occupancy function is used to determine how the Air Conditioner unit will be set depending on the presence or absence of people in the room. Remember that the occupancy signal needs to be fed by an external sensor which indicates if there is presense or not (occupancy). This signal is processed directly in the Intesis and modifies 3 parameters from the AC system: Setpoint, Mode and On/Off.

To adjust the settings to the current mode (Heat or Cool), the gateway offers 6 different BACnet objects:

- OccupiedCoolSetPoint
- OccupiedHeatSetPoint
- UnoccupiedCoolSetPoint
- UnoccupiedHeatSetPoint
- OccupancyContinousCheck
- UnoccupiedDeadbandAction

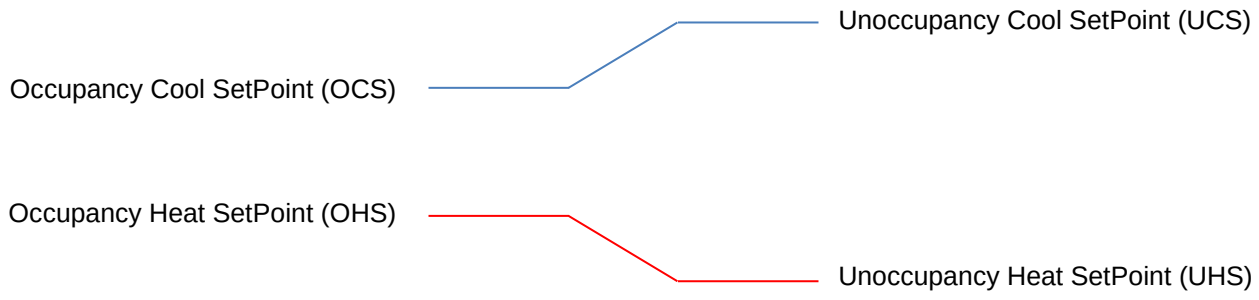

***Occupancy/Unoccupancy Cool Setpoint (OCS/UCS)*:** Default value for setpoint temperature to be set when Occupancy/Unoccupancy is enabled and current mode is cool. UCS must always be greater or equal to OCS. Difference between OCS and OHS must be greater or equal to 2°C/4°F.

***Occupancy/Unoccupancy Heat Setpoint (OHS/UHS)*:** Default value for setpoint temperature to be set when Occupancy/Unoccupancy is enabled and current mode is heat. UHS must always be smaller or equal to OHS. Difference between OCS and OHS must be greater or equal to 2°C/4°F.

Occupancy Continous check: This checkbox is used to determine if the gateway will check the occupancy conditions constantly (check) or not (unchecked) by default. That means that with the the checkbox active, conditions are checked on each change of the temperature too, while if unchecked, this is only checked when the occupancy status changes.

Unoccupied Deadband Action: This determines the action to be taken while the ambient temperature is in between the deadband. If unchecked, indoor unit will turn off and if checked it will remain on.

When **occupancy mode is active** (there is presence in the room), according to current room temperature, **mode**, **setpoint** and **on/off** will be set to:

Condition	Setpoint	Mode	On/Off
Room temperature > OCS	Current OCS value	Cool	On
Room temperature < OHS	Current OHS value	Heat	On
OCS < Room temperature > OHS	OCS/OHS depending on current mode (If Fan or Dry mode is active, no setpoint is sent)	Current mode	On

© HMS Industrial Networks S.L.U - All rights reserved
This information is subject to change without notice

When **unoccupancy mode is active** (there is no presence in the room), according to current room temperature, **mode**, **setpoint** and **on/off** will be set to:

Condition	Setpoint	Mode	On/Off
Room temperature > OCS	Current UCS value	Cool	On
Room temperature < OHS	Current UHS value	Heat	On
OCS < Room temperature > OHS	UCS/UHS depending on current mode (If Fan or Dry mode is active, no setpoint is sent)	Current mode	On (Deadband action =1)
			Off (Deadband action =0)

These checks will be done each time the indoor unit occupancy status is changed, and if ***check continuously*** checkbox is checked, also each time the room temperature changes.

The configuration set on the occupany signals is applied from the very first moment the occupancy signal is enabled until the user changes the setpoint, mode or the On/Off signal, which disables occupancy functionality.

© HMS Industrial Networks S.L.U - All rights reserved
This information is subject to change without notice

7.6 *Configuration tool*

In order to check the status of the device, signals values and general configuration, the INBACDAI001R000 includes a configuration tool. This tool is accessible only through the Ethernet port, so keep in mind that you need to switch **SW3** P1 'ON'.

By default, the device comes with a static IP, so please check that you are in the same network domain in order to connect. The default IP is: **192.168.100.246**.

7.6.1 Home

Once you reach the page, remember to login with your user and password. To access the login site, click on "User" or use the drop-down menu on the top right corner for user selection.

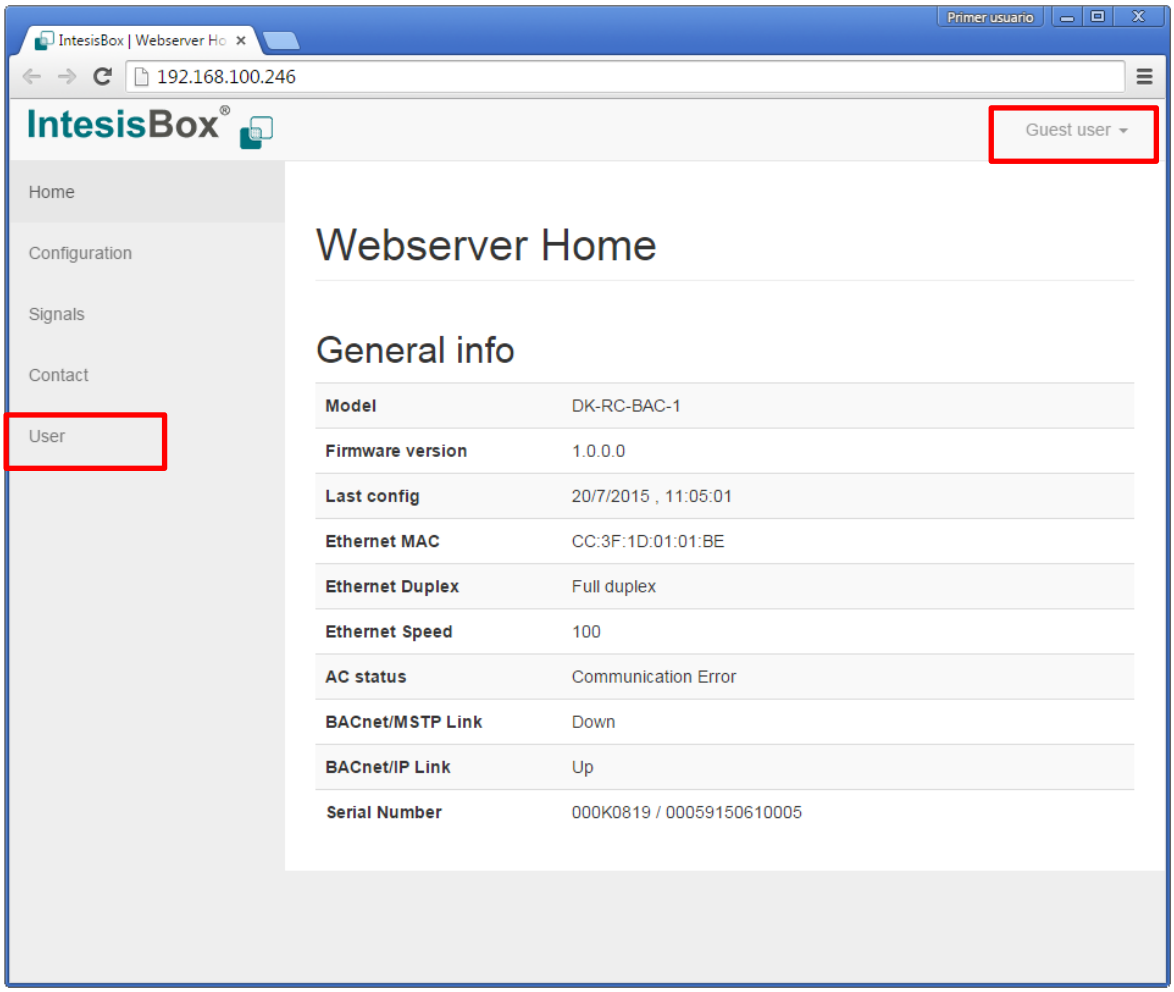

There are two access levels: ***admin*** and ***operator***. The default password value for each user is ***admin*** ➔ admin and ***operator*** ➔ operator.

Admin has total control on the device configuration, and it can control the AC unit from the web app itself. On the contrary, operator can only read information from the current configuration and can operate the AC. Priority used when using the operator mode is always set to 8.

IMPORTANT: Once configuration is done, we recommend changing the passwords to ensure access control on the gateway.

© HMS Industrial Networks S.L.U - All rights reserved
This information is subject to change without notice

7.6.2 Configuration

On the configuration section, general **BACnet settings**, specific **BACnet MS/TP** and **BACnetIP settings**, **IP settings** and **AC settings** can be configured. Each type of parameter is grouped in different blocks.

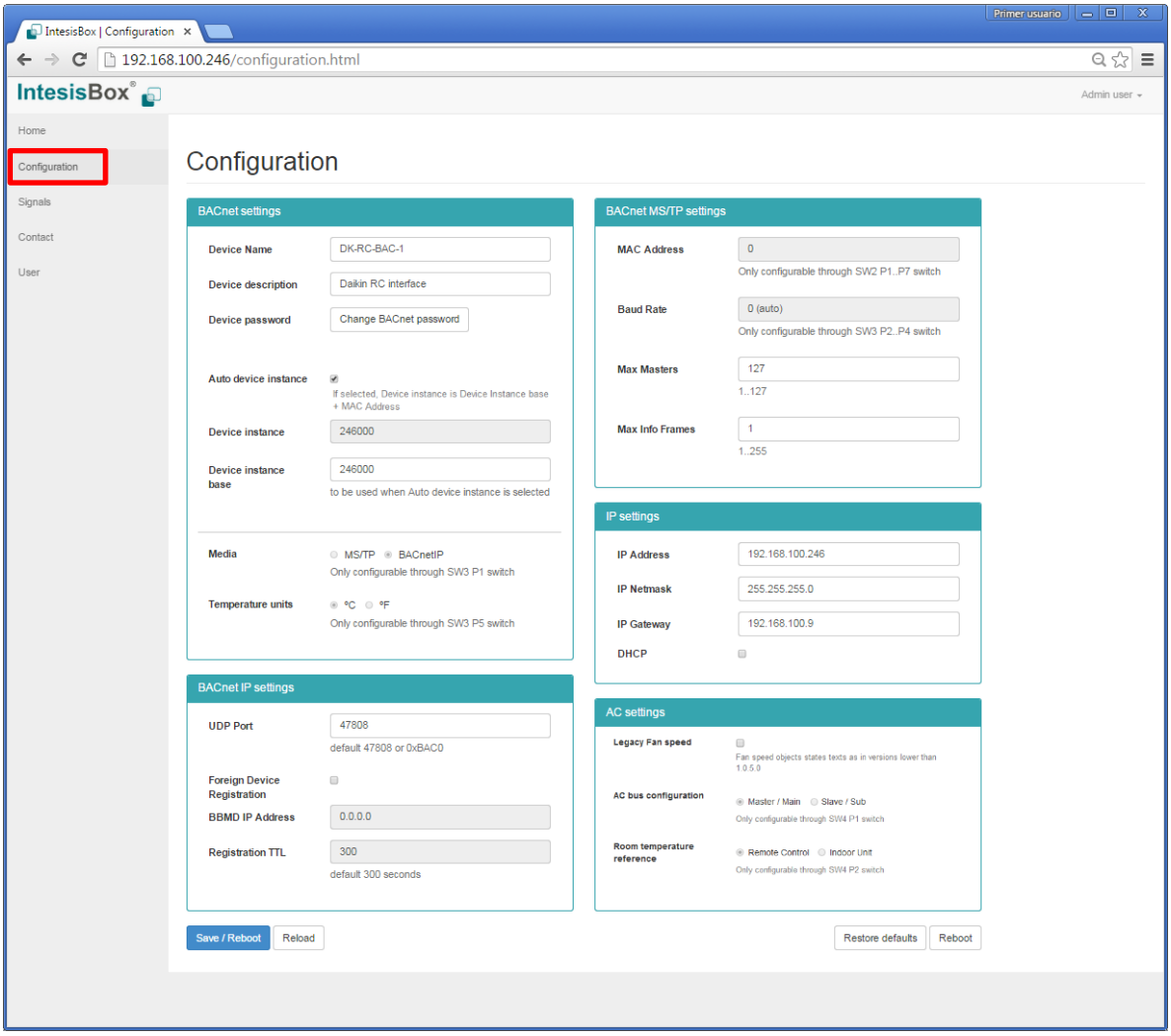

© HMS Industrial Networks S.L.U - All rights reserved
This information is subject to change without notice

7.6.3 Signals

On this section a complete list of the available BACnet objects, their **type**, **Object Instance**, **priority** and current **value** is shown. Clinking on the "**Edit**" button, users will be able to command the system having feedback from both BACnet and AC system.

It also allows continuous monitoring of the current status of the variables. The refresh time for the AC information is shown using a progression bar in the top and the bottom of the signals list.

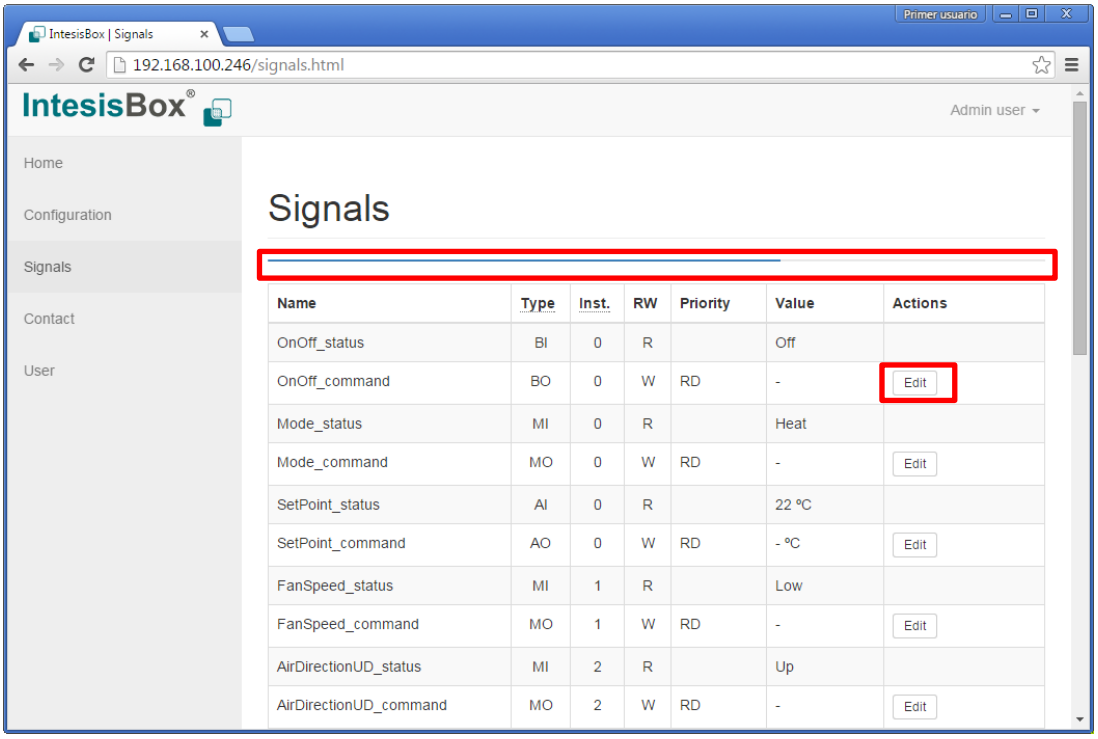

You can click on "Edit" to enter a new **priority** and **value** to be applied.

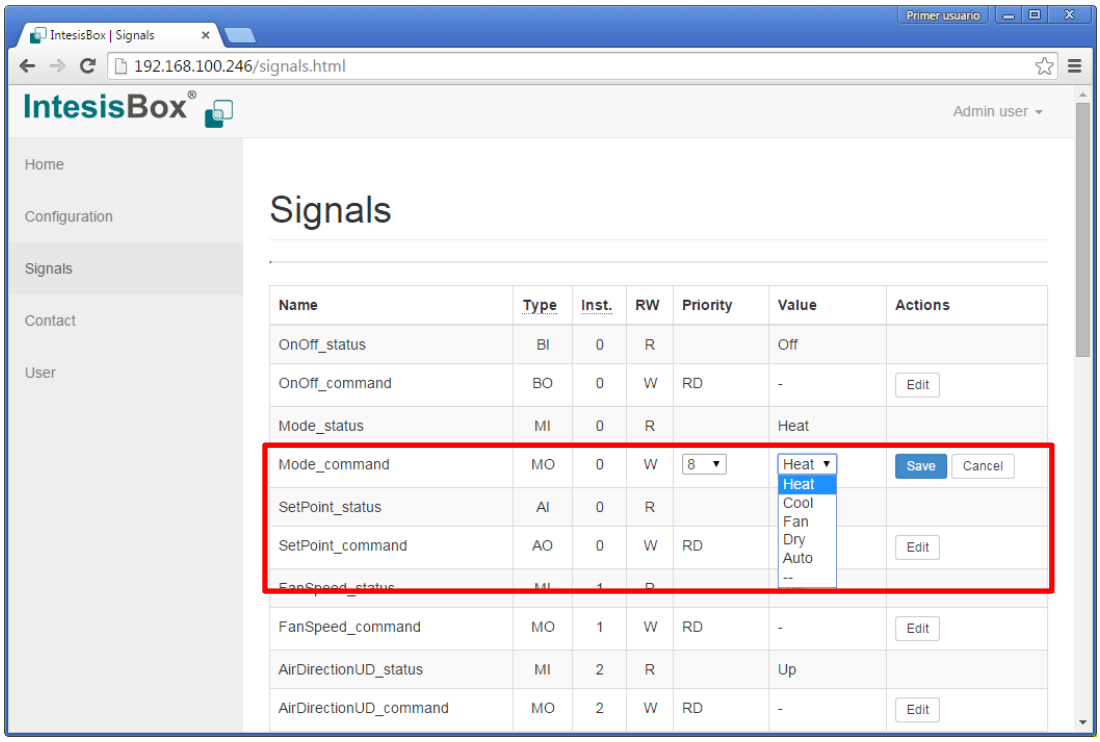

NOTE: If you want to relinquish the selected priority, please use the '--'command.

© HMS Industrial Networks S.L.U - All rights reserved
This information is subject to change without notice

8 AC Unit Types compatibility

Please, check the compatibility list at this link to see which Daikin units are compatible with our gateway.

© HMS Industrial Networks S.L.U - All rights reserved
This information is subject to change without notice

9 Mechanical & electrical characteristics

Housing	Plastic, type PC (UL 94 V-0). Dimensions: 93 mm x 53 mm x 58 mm. Weight: 85 g
Color	Light Grey. RAL 7035
Terminal wiring (for power supply and low-voltage signals)	Per terminal: solid wires or stranded wires (twisted or with ferrule) One core: 0.2 … 2.5 mm² Two cores: 0.2 … 1.5 mm² Three cores: Not permitted
Console Port	Mini USB port for console usage
Mounting	Wall DIN rail EN60715 TH35
BACnet MS/TP port	1 x EIA485 Plug-in screw terminal block (2 poles + GND)
BACnet IP port	1 x Ethernet 100BT RJ45
LED indicators	6 x Gateway/Communication status
Operational temperature	0°C to +40°C
Operational humidity	5% to 95%, non-condensing
Isolation Voltage	*4000 VDC (between AC unit and EIA-485)* *1000 VDC (between AC unit and USB)*
Protection	IP20 (IEC60529)
RoHS conformity	Compliant with RoHS directive (2002/95/CE)
Certifications	CE conformity to EMC directive (2004/108/EC) and Low-voltage directive (2006/95/EC) EN 61000-6-1; EN 61000-6-3; EN 60950-1; EN 50491-3 This device complies with part 15 of the FCC Rules. Operation is subject to the following two conditions: 1) This device may not cause harmful interference 2) This device must accept any interference received, including interference that may cause undesired operation.

10 Dimensions

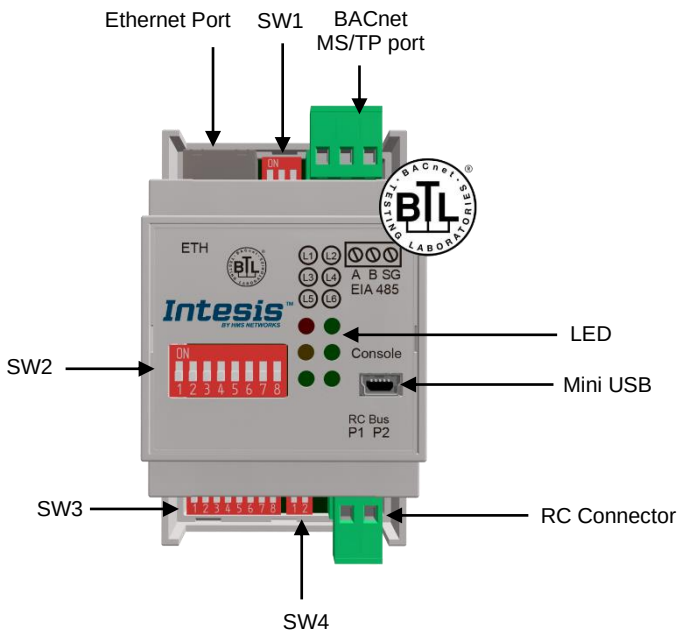

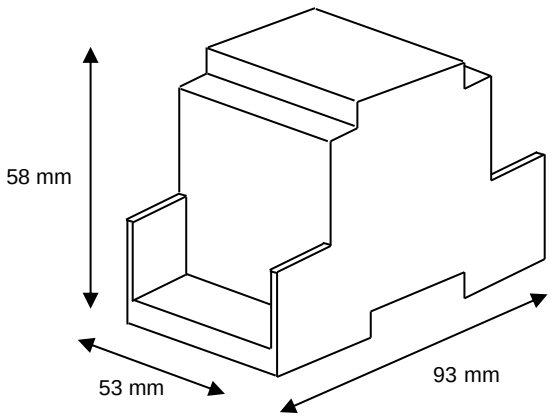

© HMS Industrial Networks S.L.U - All rights reserved
This information is subject to change without notice

11 Error codes

Below you can find a list of error codes from Daikin air conditioning system.

ErrorCode	Error CodeM	Error in RC	Error Category	Error Description
0	01	N/A	INBACDAI001R000	No active error
-1	02	Com Err.		Comm Error between INBACDAI001R000 and Daikin IU
17	03	A0	Indoor Unit	External protection devices activated
18	04	A1		Indoor unit PCB assembly failure
19	05	A2		Interlock error for fan
20	06	A3		Drain level system error
21	07	A4		Temperature of heat exchanger (1) error
22	08	A5		Temperature of heat exchanger (2) error
23	09	A6		Fan motor locked, overload, over current
24	10	A7		Swing flap motor error
25	11	A8		Overcurrent of AC input
26	12	A9		Electronic expansion valve drive error
27	13	AA		Heater overheat
28	14	AH		Dust collector error / No-maintenance filter error
30	15	AJ		Capacity setting error (indoor)
31	16	AE		Shortage of water supply
32	17	AF		Malfunctions of a humidifier system (water leaking)
33	18	C0		Malfunctions in a sensor system
36	19	C3		Sensor system of drain water error
37	20	C4		Heat exchanger (1) (Liquid pipe) thermistor system error
38	21	C5		Heat exchanger (1) (Gas pipe) thermistor system error
39	22	C6		Sensor system error of fan motor locked, overload
40	23	C7		Sensor system of swing flag motor error
41	24	C8		Sensor system of over-current of AC input
42	25	C9		Suction air thermistor error
43	26	CA		Discharge air thermistor system error
44	27	CH		Contamination sensor error
45	28	CC		Humidity sensor error
46	29	CJ		Remote control thermistor error
47	30	CE		Radiation sensor error
48	31	CF		High pressure switch sensor
49	32	E0	Outdoor Unit	Protection devices activated
50	33	E1		Outdoor uni9t PCB assembly failure
52	34	E3		High pressure switch (HPS) activated

© HMS Industrial Networks S.L.U - All rights reserved
This information is subject to change without notice

53	35	E4	Low pressure switch (LPS) activated
54	36	E5	Overload of inverter compressor motor
55	37	E6	Over current of STD compressor motor
56	38	E7	Overload of fan motor / Over current of fan motor
57	39	E8	Over current of AC input
58	40	E9	Electronic expansion valve drive error
59	41	EA	Four-way valve error
60	42	EH	Pump motor over current
61	43	EC	Water temperature abnormal
62	44	EJ	(Site installed) Protection device activated
63	45	EE	Malfunctions in a drain water
64	46	EF	Ice thermal storage unit error
65	47	H0	Malfunctions in a sensor system
66	48	H1	Air temperature thermistor error
67	49	H2	Sensor system of power supply error
68	50	H3	High Pressure switch is faulty
69	51	H4	Low pressure switch is faulty
70	52	H5	Compressor motor overload sensor is abnormal
71	53	H6	Compressor motor over current sensor is abnormal
72	54	H7	Overload or over current sensor of fan motor is abnormal
73	55	H8	Sensor system of over-current of AC input
74	56	H9	Outdoor air thermistor system error
75	57	HA	Discharge air thermistor system error
76	58	HH	Pump motor sensor system of over current is abnormal
77	59	HC	Water temperature sensor system error
79	60	HE	Sensor system of drain water is abnormal
80	61	HF	Ice thermal storage unit error (alarm)
81	62	F0	No.1 and No.2 common protection device operates.
82	63	F1	No.1 protection device operates.
83	64	F2	No.2 protection device operates
84	65	F3	Discharge pipe temperature is abnormal
87	66	F6	Temperature of heat exchanger (1) abnormal
91	67	FA	Discharge pressure abnormal
92	68	FH	Oil temperature is abnormally high
93	69	FC	Suction pressure abnormal
95	70	FE	Oil pressure abnormal
96	71	FF	Oil level abnormal
97	72	J0	Sensor system error of refrigerant temperature
98	73	J1	Pressure sensor error

© HMS Industrial Networks S.L.U - All rights reserved
This information is subject to change without notice

99	74	J2		Current sensor error
100	75	J3		Discharge pipe thermistor system error
101	76	J4		Low pressure equivalent saturated temperature sensor system error
102	77	J5		Suction pipe thermistor system error
103	78	J6		Heat exchanger (1) thermistor system error
104	79	J7		Heat exchanger (2) thermistor system error
105	80	J8		Oil equalizer pipe or liquid pipe thermistor system error
106	81	J9		Double tube heat exchanger outlet or gas pipe thermistor system error
107	82	JA		Discharge pipe pressure sensor error
108	83	JH		Oil temperature sensor error
109	84	JC		Suction pipe pressure sensor error
111	85	JE		Oil pressure sensor error
112	86	JF		Oil level sensor error
113	87	L0		Inverter system error
116	88	L3		Temperature rise in a switch box
117	89	L4		Radiation fin (power transistor) temperature is too high
118	90	L5		Compressor motor grounded or short circuit, inverter PCB fault
119	91	L6		Compressor motor grounded or short circuit, inverter PCB fault
120	92	L7		Over current of all inputs
121	93	L8		Compressor over current, compressor motor wire cut
122	94	L9		Stall prevention error (start-up error) Compressor locked, etc.
123	95	LA		Power transistor error
125	96	LC		Communication error between inverter and outdoor control unit
129	97	P0		Shortage of refrigerant (thermal storage unit)
130	98	P1		Power voltage imbalance, open phase
132	99	P3		Sensor error of temperature rise in a switch box
133	100	P4		Radiation fin temperature sensor error
134	101	P5		DC current sensor system error
135	102	P6		AC or DC output current sensor system error
136	103	P7		Total, input current sensor error
142	104	PJ		Capacity setting error (outdoor)
145	105	U0	System	Low pressure drops due to insufficient refrigerant or electronic expansion valve error, etc.
146	106	U1		Reverse phase, Open phase
147	107	U2		Power voltage failure / Instantaneous power failure
148	108	U3		Failure to carry out check operation, transmission error
149	109	U4		Communication error between indoor unit and outdoor unit, communication error between outdoor

© HMS Industrial Networks S.L.U - All rights reserved
This information is subject to change without notice

				unit and BS unit
150	110	U5		Communication error between remote control and indoor unit / Remote control board failure or setting error for remote control
151	111	U6		Communication error between indoor units
152	112	U7		Communication error between outdoor units / Communication error between outdoor unit and ice thermal storage unit
153	113	U8		Communication error between main and sub remote controllers (sub remote control error) / Combination error of other indoor unit / remote control in the same system (model)
154	114	U9		Communication error between other indoor unit and outdoor unit in the same system / Communication error between another BS unit and indoor/outdoor unit
155	115	UA		Combination error of indoor/BS/outdoor unit (model, quantity, etc.), setting error of spare parts PCB when replaced
156	116	UH		Improper connection of transmission wiring between outdoor and outdoor unit outside control adaptor
157	117	UC		Centralized address duplicated
158	118	UJ		Attached equipment transmission error
159	119	UE		Communication error between indoor unit and centralized control device
160	120	UF		Failure to carrey out check operation Indoor-outdoor, outdoor-outdoor communication error, etc.
209	121	60	Others	All system error
210	122	61		PC board error
211	123	62		Ozone density abnormal
212	124	63		Contamination sensor error
213	125	64		Indoor air thermistor system error
214	126	65		Outdoor air thermistor system error
217	127	68		HVU error (Ventiair dust-collecting unit)
219	128	6A		Dumper system error
220	129	6H		Door switch error
221	130	6C		Replace the humidity element
222	131	6J		Replace the high efficiency filter
223	132	6E		Replace the deodorization catalyst
224	133	6F		Simplified remote controller error
226	134	51		Fan motor of supply air over current or overload
227	135	52		Fan motor of return air over current / Fan motor of return air overload
228	136	53		Inverter system error (supply air side)
229	137	54		Inverter system error (return air side)
241	138	40		Humidifying valve error
242	139	41		Chilled water valve error
243	140	42		Hot water valve error
244	141	43		Heat exchanger of chilled water error

© HMS Industrial Networks S.L.U - All rights reserved
This information is subject to change without notice

245	142	44		Heat exchanger of hot water error
258	143	31		The humidity sensor of return air sensor
259	144	32		Outdoor air humidity sensor error
260	145	33		Supply air temperature sensor error
261	146	34		Return air temperature sensor error
262	147	35		Outdoor air temperature sensor error
263	148	36		Remote controller temperature sensor error
267	149	3A		Water leakage sensor 1 error
268	150	3H		Water leakage sensor 2 error
269	151	3C		Dew condensation error
339	152	M2		Centralized remote controller PCB error
345	153	M8		Communication error between centralized remote control devices
347	154	MA		Centralized remote control devices inappropriate combination
349	155	MC		Centralized remote controller address setting error
(any other)	156	UNKNOWN		UNKNOWN

In case you detect an error code not listed, contact your nearest Daikin technical support service for more information on the error meaning.

© HMS Industrial Networks S.L.U - All rights reserved
This information is subject to change without notice