BACnet MS/TP Server & BACnet IP Server

Mitsubishi Electric Air Conditioning

Compatible with Residential, Mr. Slim, and City Multi lines commercialized by Mitsubishi Electric

USER MANUAL

Issue date: 11/2024 v1.7 ENGLISH

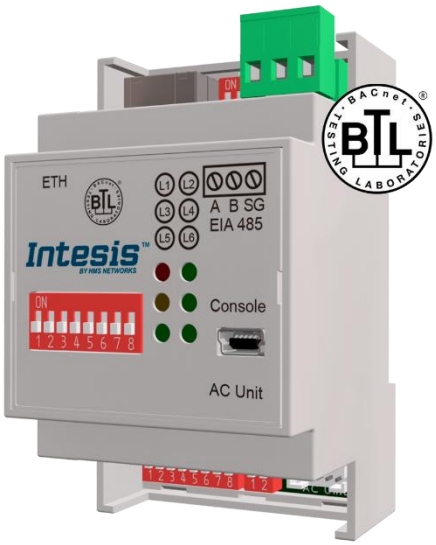

14 rue Edouard Petit
42000 St-Etienne

Tel : +33 477 92 03 56
Email : contact@rg2i.com

www.rg2i.com

Important User Information

Disclaimer

The information in this document is for informational purposes only. Please inform HMS Industrial Networks of any inaccuracies or omissions found in this document. HMS Industrial Networks disclaims any responsibility or liability for any errors that may appear in this document.

HMS Industrial Networks reserves the right to modify its products in line with its policy of continuous product development. The information in this document shall therefore not be construed as a commitment on the part of HMS Industrial Networks and is subject to change without notice. HMS Industrial Networks makes no commitment to update or keep current the information in this document.

The data, examples and illustrations found in this document are included for illustrative purposes and are only intended to help improve understanding of the functionality and handling of the product. In view of the wide range of possible applications of the product, and because of the many variables and requirements associated with any particular implementation, HMS Industrial Networks cannot assume responsibility or liability for actual use based on the data, examples or illustrations included in this document nor for any damages incurred during installation of the product. Those responsible for the use of the product must acquire sufficient knowledge in order to ensure that the product is used correctly in their specific application and that the application meets all performance and safety requirements including any applicable laws, regulations, codes and standards. Further, HMS Industrial Networks will under no circumstances assume liability or responsibility for any problems that may arise as a result from the use of undocumented features or functional side effects found outside the documented scope of the product. The effects caused by any direct or indirect use of such aspects of the product are undefined and may include e.g. compatibility issues and stability issues.

© HMS Industrial Networks S.L.U - All rights reserved
This information is subject to change without notice

Gateway for the integration of a Mitsubishi Electric air conditioning unit in BACnet enabled monitoring and control systems.

Compatible with Domestic, Mr. Slim and City Multi lines commercialized by Mitsubishi Electric.

ORDER CODE	LEGACY ORDER CODE
INBACMIT001I000	ME-AC-BAC-1

© HMS Industrial Networks S.L.U - All rights reserved
This information is subject to change without notice

INDEX

1 Description 6
1.1 Introduction 6
1.2 Functionality 7
1.3 Capacity of Intesis 7
1.4 Quick Setup 7
2 Protocol Implementation Conformance Statement 8
2.1 BACnet Standardized Device Profile (Annex L): 8
2.2 Segmentation Capability: 8
2.3 Data Link Layer Options: 8
2.4 Device Address Binding: 9
2.5 Networking Options: 9
2.6 Character Sets Supported 9
2.7 Gateway 9
3 BACnet Interoperability Building Blocks Supported (BIBBs) 10
3.1 Data Sharing BIBBs 10
3.2 Alarm and Event Management BIBBs 10
3.3 Scheduling BIBBs 11
3.4 Trending BIBBs 11
3.5 Network Management BIBBs 11
3.6 Device Management BIBBs 12
4 Service Types 13
5 Objects 14
5.1 Supported Object Types 14
5.2 Member objects 15
5.2.1 Type: Gateway 15
5.2.2 Type: Indoor Unit 15
5.3 Objects and properties 16
5.3.1 Mitsubishi Electric AC Gateway (Device Object Type) 16
5.3.2 OnOff_status (Binary Input Object Type) 18
5.3.3 OnOff_command (Binary Output Object Type) 19
5.3.4 Mode_status (Multistate Input Object Type) 20
5.3.5 Mode_command (Multistate Output Object Type) 21
5.3.6 Setpoint_status (Analog Input Object Type) 22
5.3.7 Setpoint_command (Analog Output Object Type) 23
5.3.8 FanSpeed_status (Multistate Input Object Type) 24
5.3.9 FanSpeed_command (Multistate Output Object Type) 25
5.3.10 AirDirectionUD_status (Multistate Input Object Type) 26
5.3.11 AirDirectionUD_command (Multistate Output Object Type) 27

© HMS Industrial Networks S.L.U - All rights reserved
This information is subject to change without notice

5.3.12 ErrorCode (Analog Input Object Type) 29
5.3.13 ErrorCodeM (Multistate Input Object Type) 30
5.3.14 ErrorActive (Binary Input Object Type) 32
5.3.15 OnTimeCounter (Analog Value Object Type) 33
5.3.16 Occupancy (Multistate Value Object Type) 34
5.3.17 OccupiedCoolSetPoint (Analog Value Object Type) 35
5.3.18 OccupiedHeatSetPoint (Analog Value Object Type) 36
5.3.19 UnoccupiedCoolSetPoint (Analog Value Object Type) 37
5.3.20 UnoccupiedHeatSetPoint (Analog Value Object Type) 38
5.3.21 OccupancyContinuousCheck (Binary Value Object Type) 39
5.3.22 UnoccupiedDeadbandAction(Binary Value Object Type) 40
5.3.23 LockRemoteControl(Binary Value Object Type) 41
6 Connections and switches 42
6.1 Connect to the AC indoor unit interface 42
6.2 Connect to BACnet MS/TP 43
6.2.1 MS/TP MAC address switch configuration 43
6.2.2 MS/TP activation and baudrate 44
6.3 Connect to BACnet IP 44
6.3.1 BACnet Device Instance 44
7 Set-up process and troubleshooting 45
7.1 Pre-requisites 45
7.2 Physical checking 45
7.3 LED status 45
7.4 Occupancy 46
7.5 Configuration tool 47
7.5.1 Home 47
7.5.2 Configuration 48
7.5.3 Signals 48
8 AC Unit Types compatibility 50
9 Mechanical & electrical characteristics 50
10 Dimensions 51
11 Error codes 52

© HMS Industrial Networks S.L.U - All rights reserved
This information is subject to change without notice

1 Description

1.1 *Introduction*

This document describes the integration of Mitsubishi Electric air conditioning systems into BACnet compatible devices and systems using gateway *INBACMIT001I000.*

The aim of this integration is to monitor and control your Mitsubishi Electric air conditioning system, remotely, from your Control Center using any commercial SCADA or monitoring software that includes a BACnet driver, or connect it to other BACnet devices to do any automation. To do it so, Intesis allows BACnet communication allowing polling or subscription requests (COV).

Intesis makes available the Mitsubishi Electric air conditioning system indoor units through independent BACnet objects.

Abstraction of Mitsubishi Electric air conditioning system properties and functionalities as fixed BACnet Objects. Intesis allows fixed BACnet object IDs mapping. Simple configuration is needed: just select the appropriate communication parameters (MAC address, baud rate…).

This document assumes that the user is familiar with BACnet and Mitsubishi Electric technologies and their technical terms.

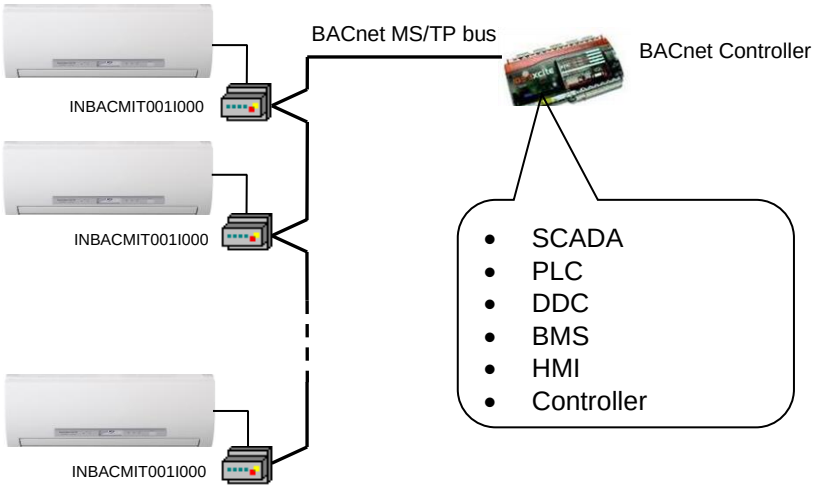

BACnet MS/TP installation sketch

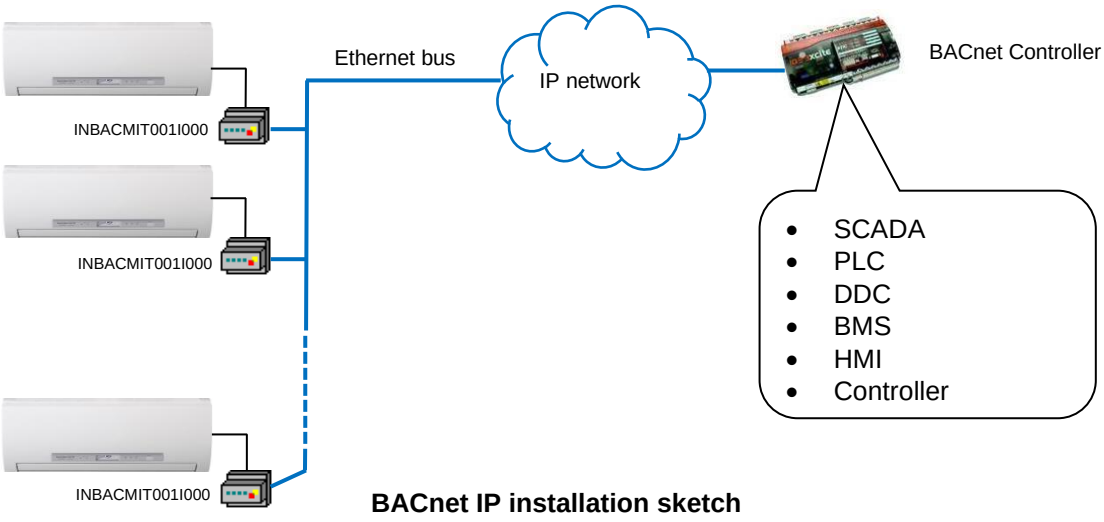

BACnet IP installation sketch

© HMS Industrial Networks S.L.U - All rights reserved
This information is subject to change without notice

1.2 *Functionality*

Intesis continuously read the Mitsubishi Electric AC unit and keeps the updated status of all objects in its memory, ready to be served when requested from the BACnet side.

The role of Intesis consists in associate the elements of the Mitsubishi Electric AC unit with BACnet objects.

The control of the indoor units through the INBACMIT001I000 is permitted, so commands toward the Mitsubishi Electric AC unit are permitted too.

The indoor unit is offered in a set of BACnet objects and extra functionality.

1.3 *Capacity of Intesis*

Intesis is capable of integrating one single Mitsubishi Electric AC unit and its associated elements.

Element	Max.	Notes
Number of indoor units	1	Number of indoor units that can be controlled through Intesis
Number of Objects	24	Number of Mitsubishi Electric AC signals available as objects into Intesis.

1.4 *Quick Setup*

1. Install Intesis in the desired installation site (DIN rail mounting inside a metallic industrial cabinet connected to ground is recommended).
2. Connect the communication cables. Details in section 6.
3. Connect to the Intesis. Details in section 7.5.
4. (Optional) Configure the Intesis using the configuration tool. Details in section 7.5.2.
5. Check the BACnet objects list for its integration to your BACnet project. Details in section 5.2.
6. Check if there is communication between BACnet and AC system. Details in section 7.5.3.
7. The Intesis is ready to be used in your system.

© HMS Industrial Networks S.L.U - All rights reserved
This information is subject to change without notice

2 Protocol Implementation Conformance Statement

BACnet Protocol Implementation Conformance Statement (PICS)

Date: *2015-04-01*
Vendor Name: *HMS Industrial Networks S.L.U*
Product Name: *INBACMIT001I000*
Product Model Number: *INBACMIT001I000*
Application Software Version: *1.0*
Firmware Revision: *1.0.0.0*
BACnet Protocol Revision: *12*

Product Description:

Mitsubishi Electric air conditioning system – BACnet MS/TP & BACnet IP Gateway

Abstraction of Mitsubishi Electric air conditioning system properties and functionalities as BACnet Objects.

2.1 *BACnet Standardized Device Profile (Annex L):*

☐ BACnet Operator Workstation (B-OWS)

☐ BACnet Building Controller (B-BC)

☐ BACnet Advanced Application Controller (B-AAC)

☒ BACnet Application Specific Controller (B-ASC)

☐ BACnet Smart Sensor (B-SS)

☐ BACnet Smart Actuator (B-SA)

Additional BACnet Interoperability Building Blocks Supported (Annex K):
Reference of BIBBs List

2.2 *Segmentation Capability:*

Segmented request supported	☐ No	☒ Yes	Window Size *16*
Segmented responses supported	☐ No	☒ Yes	Window Size *16*

2.3 *Data Link Layer Options:*

☒ BACnet IP, (Annex J)
☐ BACnet IP, (Annex J), Foreign Device
☐ ISO 8802-3, Ethernet (Clause 7)
☐ ANSI/ATA 878.1, 2.5 Mb. ARCNET (Clause 8)
☐ ANSI/ATA 878.1, RS-485 ARCNET (Clause 8), baud rate(s) ____
☒ MS/TP master (Clause 9), baud rate(s): 9600, 19200, 38400, 76800
☐ MS/TP slave (Clause 9), baud rate(s):
☐ Point-To-Point, EIA 232 (Clause 10), baud rate(s):
☐ Point-To-Point, modem, (Clause 10), baud rate(s):
☐ LonTalk, (Clause 11), medium: _____
☐ Other:

© HMS Industrial Networks S.L.U - All rights reserved
This information is subject to change without notice

2.4 *Device Address Binding:*

Is static device binding supported? (This is currently necessary for two-way communication with MS/TP slaves and certain other devices.) ☐ Yes ☒ No

2.5 *Networking Options:*

☐ Router, Clause 6 - List all routing configurations, e.g., ARCNET-Ethernet, Ethernet-MS/TP, etc.
☐ Annex H, BACnet Tunneling Router over IP
☐ BACnet/IP Broadcast Management Device (BBMD)
Does the BBMD support registrations by Foreign Devices? ☐ Yes ☐ No

2.6 *Character Sets Supported*

Indicating support for multiple character sets does not imply that they can all be supported simultaneously.

☒ ANSI X3.4
☐ IBM™/Microsoft™ DBCS
☐ JIS C 6226
☐ ISO 10646 (UCS-4)
☐ ISO 10646 (UCS-2)
☐ ISO 8859-1

2.7 *Gateway*

If this product is a communication gateway, describe the types of non-BACnet equipment/network(s) that the gateway supports:

Mitsubishi Electric Air Conditioning Units compatible with Domestic & Mr. Slim line air conditioners.

© HMS Industrial Networks S.L.U - All rights reserved
This information is subject to change without notice

3 BACnet Interoperability Building Blocks Supported (BIBBs)

3.1 *Data Sharing BIBBs*

BIBB Type		Active	BACnet Service	Initiate	Execute
DS-RP-A	Data Sharing-ReadProperty–A	☐	ReadProperty	☒	☐
DS-RP-B	Data Sharing-ReadProperty–B	☒	ReadProperty	☐	☒
DS-RPM-A	Data Sharing-ReadPropertyMultiple–A	☐	ReadPropertyMultiple	☒	☐
DS-RPM-B	Data Sharing-ReadPropertyMultiple–B	☒	ReadPropertyMultiple	☐	☒
DS-RPC-A	Data Sharing-ReadPropertyConditiona–A	☐	ReadPropertyConditional	☒	☐
DS-RPC-B	Data Sharing-ReadPropertyConditional–B	☐	ReadPropertyConditional	☐	☒
DS-WP-A	Data Sharing-WriteProperty–A	☐	WriteProperty	☒	☐
DS-WP-B	Data Sharing-WriteProperty–B	☒	WriteProperty	☐	☒
DS-WPM-A	Data Sharing-WritePropertyMultiple–A	☐	WritePropertyMultiple	☒	☐
DS-WPM-B	Data Sharing-WritePropertyMultiple–B	☒	WritePropertyMultiple	☐	☒
DS-COV-A	Data Sharing-COV–A	☐	SubscribeCOV	☒	☐
		☐	ConfirmedCOVNotification	☐	☒
		☐	UnconfirmedCOVNotification	☐	☒
DS-COV-B	Data Sharing-COV–B	☒	SubscribeCOV	☐	☒
		☒	ConfirmedCOVNotification	☒	☐
		☒	UnconfirmedCOVNotification	☒	☐
DS-COVP-A	Data Sharing-COVP–A	☐	SubscribeCOV	☒	☐
		☐	ConfirmedCOVNotification	☐	☒
		☐	UnconfirmedCOVNotification	☐	☒
DS-COVP-B	Data Sharing-COVP–B	☐	SubscribeCOV	☐	☒
		☐	ConfirmedCOVNotification	☒	☐
		☐	UnconfirmedCOVNotification	☒	☐
DS-COVU-A	Data Sharing-COV-Unsolicited–A	☐	UncofirmedCOVNotification	☐	☒
DS-COVU-B	Data Sharing-COV-Unsolicited-B	☐	UncofirmedCOVNotification	☒	☐

3.2 *Alarm and Event Management BIBBs*

BIBB Type		Active	BACnet Service	Initiate	Execute
AE-N-A	Alarm and Event-Notification–A	☐	ConfirmedEventNotification	☐	☒
		☐	UnconfirmedEventNotification	☐	☒
AE-N-I-B	Alarm and Event-Notification Internal–B	☐	ConfirmedEventNotification	☒	☐
		☐	UnconfirmedEventNotification	☒	☐
AE-N-E-B	Alarm and Event-Notification External–B	☐	ConfirmedEventNotification	☒	☐
		☐	UnconfirmedEventNotification	☒	☐
AE-ACK-A	Alarm and Event-ACK–A	☐	AcknowledgeAlarm	☒	☐
AE-ACK-B	Alarm and Event-ACK–B	☐	AcknowledgeAlarm	☐	☒
AE-ASUM-A	Alarm and Event-Summary–A	☐	GetAlarmSummary	☒	☐
AE-ASUM-B	Alarm and Event-Summary–B	☐	GetAlarmSummary	☐	☒
AE-ESUM-A	Event-Summary–A	☐	GetEnrollmentSummary	☒	☐
AE-ESUM-B	Event-Summary–B	☐	GetEnrollmentSummary	☐	☒
AE-INFO-A	Alarm and Event-Information–A	☐	GetEventInformation	☒	☐
AE-INFO-B	Alarm and Event-Information–B	☐	GetEventInformation	☐	☒
AE-LS-A	Alarm and Event-LifeSafety–A	☐	LifeSafetyOperation	☒	☐
AE-LS-B	Alarm and Event-LifeSafety–B	☐	LifeSafetyOperation	☐	☒

© HMS Industrial Networks S.L.U - All rights reserved
This information is subject to change without notice

3.3 *Scheduling BIBBs*

BIBB Type		Active	BACnet Service	Initiate	Execute
SCHED-A	Scheduling–A *(must support DS-RP-A and DS-WP-A)*	☐			
		☐			
SCHED-I-B	Scheduling-Internal–B *(shall support DS-RP-B and DS-WP-B)* *(shall also support ether DM-TS-B or DS-UTC-B)*	☐			
		☐			
SCHED-E-B	Scheduling-External–B *(shall support SCHED-I-B and DS-WP-A)*	☐			
		☐			
T-VMT-A	Trending - Viewing and Modifying Trends–A	☐	ReadRange	☐	☒
T-VMT-I-B	Trending - Viewing and Modifying Trends Inernal–B	☐	ReadRange	☐	☒
T-VMT-E-B	Trending - Viewing and Modifying Trends External–B	☐	ReadRange	☐	☒
T-ATR-A	Trending - Automated Trend Retrieval–A	☐	ConfirmedEventNotification	☐	☒
		☐	ReadRange	☒	☐
T-ATR-B	Trending - Automated Trend Retrieval–B	☐	ConfirmedEventNotification	☒	☐
		☐	ReadRange	☐	☒

3.4 *Trending BIBBs*

BIBB Type		Active	BACnet Service	Initiate	Execute
T-VMT-A	Trending - Viewing and Modifying Trends–A	☐	ReadRange	☒	☐
T-VMT-I-B	Trending - Viewing and Modifying Trends Inernal–B	☐	ReadRange	☐	☒
T-VMT-E-B	Trending - Viewing and Modifying Trends External–B	☐	ReadRange	☐	☒
T-ATR-A	Trending - Automated Trend Retrieval–A	☐	ConfirmedEventNotification	☐	☒
		☐	ReadRange	☒	☐
T-ATR-B	Trending - Automated Trend Retrieval–B	☐	ConfirmedEventNotification	☒	☐
		☐	ReadRange	☐	☒

3.5 *Network Management BIBBs*

BIBB Type		Active	BACnet Service	Initiate	Execute
NM-CE-A	Network Management - Connection Establishment–A	☐	Establish-Connection-To-Network	☒	☐
		☐	Disconnect-Connection-To-Network	☒	☐
NM-CE-B	Network Management - Connection Establishment– B	☐	Establish-Connection-To-Network	☐	☒
		☐	Disconnect-Connection-To-Network	☐	☒
NM-RC-A	Network Management - Router Configuration–A	☐	Who-Is-Router-To-Network	☒	☐
		☐	I-Am-Router-To-Network	☐	☒
		☐	I-Could-Be-Router-To-Network	☐	☒
		☐	Initialize-Routing-Table	☒	☐
		☐	Initialize-Routing-Table-Ack	☐	☒
NM-RC-B	Network Management - Router Configuration–B	☐	Who-Is-Router-To-Network	☒	☒
		☐	I-Am-Router-To-Network	☒	☒
		☐	Initialize-Routing-Table	☐	☒
		☐	Initialize-Routing-Table-Ack	☒	☐

© HMS Industrial Networks S.L.U - All rights reserved
This information is subject to change without notice

3.6 *Device Management BIBBs*

BIBB Type		Active	BACnet Service	Initiate	Execute
DM-DDB-A	Device Management - Dynamic Device Binding–A	☐	Who-Is	☒	☐
		☐	I-Am	☐	☒
DM-DDB-B	Device Management - Dynamic Device Binding–B	☒	Who-Is	☐	☒
		☒	I-Am	☒	☐
DM-DOB-A	Device Management - Dynamic Object Binding–A	☐	Who-Has	☒	☐
		☐	I-Have	☐	☒
DM-DOB-B	Device Management - Dynamic Object Binding–B	☒	Who-Has	☐	☒
		☒	I-Have	☒	☐
DM-DCC-A	Device Management - DeviceCommunicationControl–A	☐	DeviceCommunicationControl	☒	☐
DM-DCC-B	Device Management - DeviceCommunicationControl–B	☒	DeviceCommunicationControl	☐	☒
DM-PT-A	Device Management - PrivateTransfer–A	☐	ConfirmedPrivateTransfer	☒	☐
		☐	UnconfirmedPrivateTransfer	☒	☐
DM-PT-B	Device Management - PrivateTransfer–B	☐	ConfirmedPrivateTransfer	☐	☒
		☐	UnconfirmedPrivateTransfer	☐	☒
DM-TM-A	Device Management - Text Message–A	☐	ConfirmedTextMessage	☒	☐
		☐	UnconfirmedTextMessage	☒	☐
DM-TM-B	Device Management - Text Message–B	☐	ConfirmedTextMessage	☐	☒
		☐	UnconfirmedTextMessage	☐	☒
DM-TS-A	Device Management - TimeSynchronization–A	☐	TimeSynchronization	☒	☐
DM-TS-B	Device Management - TimeSynchronization–B	☐	TimeSynchronization	☐	☒
DM-UTC-A	Device Management - UTCTimeSynchronization–A	☐	UTCTimeSynchronization	☒	☐
DM-UTC-B	Device Management - UTCTimeSynchronization–B	☐	UTCTimeSynchronization	☐	☒
DM-RD-A	Device Management - ReinitializeDevice–A	☐	ReinitializeDevice	☒	☐
DM-RD-B	Device Management - ReinitializeDevice–B	☒	ReinitializeDevice	☐	☒
DM-BR-A	Device Management - Backup and Restore–A	☐	AtomicReadFile	☒	☐
		☐	AtomicWriteFile	☒	☐
		☐	CreateObject	☒	☐
		☐	ReinitializeDevice	☒	☐
DM-BR-B	Device Management - Backup and Restore–B	☐	AtomicReadFile	☐	☒
		☐	AtomicWriteFile	☐	☒
		☐	ReinitializeDevice	☐	☒
DM-R-A	Device Management - Restart–A	☐	UnconfimedCOVNotification	☐	☒
DM-R-B	Device Management - Restart–B	☐	UnconfimedCOVNotification	☒	☐
DM-LM-A	Device Management - List Manipulation–A	☐	AddListElement	☒	☐
		☐	RemoveListElement	☒	☐
DM-LM-B	Device Management - List Manipulation–B	☐	AddListElement	☐	☒
		☐	RemoveListElement	☐	☒
DM-OCD-A	Device Management - Object Creation and Deletion–A	☐	CreateObject	☒	☐
		☐	DeleteObject	☒	☐
DM-OCD-B	Device Management - Object Creation and Deletion–B	☐	CreateObject	☐	☒
		☐	DeleteObject	☐	☒
DM-VT-A	Device Management - Virtual Terminal–A	☐	VT-Open	☒	☐
		☐	VT-Close	☒	☒
		☐	VT-Data	☒	☒
DM-VT-B	Device Management - Virtual Terminal–B	☐	VT-Open	☐	☒
		☐	VT-Close	☒	☒
		☐	VT-Data	☒	☒

© HMS Industrial Networks S.L.U - All rights reserved
This information is subject to change without notice

4 Service Types

Service type	Service name	Supported	Remarks
Alarm and Event Services	AcknowledgeAlarm	☐	
	ConfirmedCOVNotification	☐	
	ConfirmedEventNotification	☐	
	GetAlarmSummary	☐	
	GetEnrollmentSummary	☐	
	SubscribeCOV	☒	
File Access Services	AtomicReadFile	☐	
	AtomicWriteFile	☐	
Object Access Services	AddListElement	☐	
	RemoveListElement	☐	
	CreateObject	☐	
	DeleteObject	☐	
	ReadProperty	☒	
	ReadPropertyConditional	☐	
	ReadPropertyMultiple	☒	
	ReadRange	☐	
	WriteProperty	☒	
	WritePropertyMultiple	☒	
Remote Device Management Services	DeviceComminicationControl	☐	
	ConfirmedPrivateTransfer	☐	
	ConfirmedTextMessage	☐	
	ReinitializeDevice	☒	
Virtual Terminal Services	VtOpen	☐	
	VtClose	☐	
	VtData	☐	
Security Services	Authenticate	☐	
	RequestKey	☐	
Unconfirmed Services	I-Am	☒	
	I-Have	☒	
	UnconfirmedCOVNotification	☐	
	UnconfirmedEventNotification	☐	
	UnconfirmedPrivateTransfer	☐	
	UnconfirmedTextMessage	☐	
	TimeSynchronization	☐	
	UtcTimeSynchronization	☐	
	Who-Has	☒	
	Who-Is	☒	
	LifeSafetyOperation	☐	
	SubscribeCOVProperty	☒	
	GetEventInformation	☐	

© HMS Industrial Networks S.L.U - All rights reserved
This information is subject to change without notice

5 Objects

5.1 *Supported Object Types*

The objects supported are shown in the table below.

Object Type	ID	Supported	Management Point
Analog-Input	0	☒	SetPoint_status Room Temperature ErrorCode
Analog-Output	1	☒	SetPoint_command
Analog-Value	2	☒	OnTimeCounter OccupiedCoolSetPoint OccupiedHeatSetPoint UnoccupiedCoolSetPoint UnoccupiedHeatSetPoint
Averaging	18	☐	
Binary-Input	3	☒	OnOff_status ErrorActive
Binary-Output	4	☒	OnOff_command
Binary-Value	5	☒	OccupancyContinousCheck UnnoccupiedDeadBandAction LockRemoteControl
Calendar	6	☐	
Command	7	☐	
Device	8	☒	INBACMIT001I000
Event-Enrollment	9	☐	
File	10	☐	
Group	11	☐	
Life-Safety-Point	21	☐	
Life-Safety-Zone	22	☐	
Loop	12	☐	
Multistate-Input	13	☒	Mode_status FanSpeed_status AirDirectionUD_status ErrorCodeM
Multistate-Output	14	☒	Mode_command FanSpeed_command AirDirectionUD_command
Multistate-Value	19	☒	Occupancy
Notification-Class	15	☐	
Program	16	☐	
Schedule	17	☐	
Trend-Log	20	☐	

© HMS Industrial Networks S.L.U - All rights reserved
This information is subject to change without notice

5.2 *Member objects*

5.2.1 Type: Gateway

Object-name	Description	Object-type	Object-instance
INBACMIT001I000	Mitsubishi Electric AC	Device	246000*

5.2.2 Type: Indoor Unit

Object-name	Description	Object-type	Object-instance
OnOff_status		BI	0
OnOff_command		BO	0
Mode_status		MI	0
Mode_command		MO	0
SetPoint_status		AI	0
SetPoint_command		AO	0
FanSpeed_status		MI	1
FanSpeed_command		MO	1
AirDirectionUD_status		MI	2
AirDirectionUD_command		MO	2
Room Temperature		AI	1
ErrorCode		AI	2
ErrorCodeM		MI	4
ErrorActive		BI	1
OnTimeCounter		AV	0
Occupancy		MV	0
OccupiedCoolSetPoint		AV	1
OccupiedHeatSetPoint		AV	2
UnoccupiedCoolSetPoint		AV	3
UnoccupiedHeatSetPoint		AV	4
OccupancyContinuousCheck		BV	0
UnoccupiedDeadbandAction		BV	1
LockRemoteControl		BV	2

* This is the default value. Check section 0 (below) for more information.

© HMS Industrial Networks S.L.U - All rights reserved
This information is subject to change without notice

5.3 *Objects and properties*

Below you can find relevant information for the objects and properties.

Object_Identifier: In the **Device Object**, is configurable writing directly on the property. either from BACnet or through our configuration tools and can be set automatically or manually. When set automatically, it is set using a base address and the address selected in SW2 P1..P7. The base address can be selected using the configuration tool. When set manually, the address is directly the one configured on the configuration tool. See section 7.4 for more information

Object_Name: In the **Device Object**, is configurable writing directly on this property. This can be done using the configuration tools too. See section 7.4 for more information.

Description: In the **Device Object**, is configurable writing directly on the property, length maximum 63 chars. This string is configurable using the configuration tool. See section 7.4 for more information.

5.3.1 Mitsubishi Electric AC Gateway (Device Object Type)

Property Identifier	Property Datatype	Value	ASHRAE	IBOX
Object_Identifier	BACnetObjectIdentifier	(Device, 246000)	R	R
Object_Name	CharacterString	"INBACMIT001I000"	R	R
Object_Type	BACnetObjectType	DEVICE (8) (Device Object Type)	R	R
System_Status	BACnetDeviceStatus	OPERATIONAL (0)	R	R
Vendor_Name	CharacterString	"HMS Industrial Networks S.L.U"	R	R
Vendor_Identifier	Unsigned16	246	R	R
Model_Name	CharacterString	"INBACMIT001I000"	R	R
Firmware_Revision	CharacterString	"1.0.0.0"	R	R
Application_Software_ Version	CharacterString	"1.0.0.0"	R	R
Location	CharacterString	""	O	-
Description	CharacterString	"Mitsubishi Electric AC interface"	O	R
Protocol_Version	Unsigned	1	R	R
Protocol_Revision	Unsigned	12	R	R
Protocol_Services_ Supported	BACnetServiceSupported	Refer to section 4 [Service Types]	R	R
Protocol_Object_Types_ Supported	BACnetObjectTypes Supported	Refer to section 5.1 [Object Types]	R	R
Object_List	BACnetArray[N] of BACnetObjectIdentifier	BACnetARRAY[N]	R	R
Structured_Object_List	BACnetArray[N] of BACnetObjectIdentifier	-	O	-
Max_APDU_Length_ Accepted	Unsigned	480 when MSTP / 1476 when BACnet/IP	R	R
Segmentation_Supported	BACnetSegmentation	SEGMENTED-BOTH (0)	R	R
Max_Segments_accepted	Unsigned	16	O	R
VT_Classes_Supported	List of BACnetVTClass	-	O	-
Active_VT_Sessions	List of BACnetVTSession	-	O	-
Local_Date	Date	-	O	-

© HMS Industrial Networks S.L.U - All rights reserved
This information is subject to change without notice

Local_Time	Time	-	O	-
UTC_Offset	INTEGER	-	O	-
Daylight_Savings_Status	BOOLEAN	-	O	-
APDU_Segment_Timeout	Unsigned	3000	R	R
APDU_Timeout	Unsigned	3000	R	R
Number_of_APDU_ Retries	Unsigned	3	R	R
List_Of_Session_Keys	List of BACnetSessionKey	-	O	-
Time_Synchronization_ Recipients	List of BACnetRecipient	-	O	-
Max_Master * **	Unsigned	127	R	W
Max_Info_Frames *	Unsigned	1	O	R
Device_Address_Binding	List of BACnetAddressBinding	NULL (empty)	R	R
Database_Revision	Unsigned	0	R	R
Configuration_Files	BACnetArray[N] of BACnetObjectIdentifier	-	O	-
Last_Restore_Time	BACnetTimeStamp	-	O	-
Backup_Failure_Timeout	Unsigned16	-	O	-
Active_COV_ Subscriptions	List of BACnetCOVSubscription	List of BACnetCOVSubscription	O	R
Slave_Proxy_Enable	BACnetArray[N] of BOOLEAN	-	O	-
Manual_Slave_Address_ Binding	List of BACnetAddressBinding	-	O	-
Auto_Slave_Discovery	BACnetArray[N] of BOOLEAN	-	O	-
Slave_Address_Binding	BACnetAddressBinding	-	O	-
Last_Restart_Reason	BACnetRestartReason	-	O	-
Time_Of_Device_Restart	BACnetTimeStamp	-	O	-
Restart_Notification_ Recipients	List of BACnetRecipient	-	O	-
UTC_Time_ Synchronization_ Recipients	List of BACnetRecipient	-	O	-
Time_Synchronization_ Interval	Unsigned	-	O	-
Align_Intervals	BOOLEAN	-	O	-
Interval_Offset	Unsigned	-	O	-
Profile_Name	CharacterString	-	O	-

* Only available when MSTP is used

** Configurable through the configuration tool. See section 7.4 for more information.

© HMS Industrial Networks S.L.U - All rights reserved
This information is subject to change without notice

5.3.2 OnOff_status (Binary Input Object Type)

It indicates if the indoor unit is in On or Off status.

Property Identifier	Property Datatype	Value	ASHRAE	IBOX
Object_Identifier	BACnetObjectIdentifier	(Binary Input, 0)	R	R
Object_Name	CharacterString	“OnOff_status”	R	R
Object_Type	BACnetObjectType	BINARY_INPUT (3)	R	R
Present_Value	BACnetBinaryPV	INACTIVE (0) / ACTIVE (1)	R	R
Description	CharacterString	-	O	-
Device_Type	CharacterString	-	O	-
Status_Flags	BACnetStatusFlags	{FALSE, FALSE/TRUE, FALSE, FALSE}	R	R
Event_State	BACnetEventState	STATE_NORMAL (0)	R	R
Reliability	BACnetReliability	NO_FAULT_DETECTED (0), UNRELIABLE_OTHER (7)	O	R
Out_Of_Service	BOOLEAN	FALSE	R	R
Polarity	BACnetPolarity	NORMAL (0)	R	R
Inactive_Text	CharacterString	"Off"	O	R
Active_Text	CharacterString	“On”	O	R
Change_Of_State_Time	BACnetDatetime	-	O	-
Change_Of_State_Count	Unsigned	-	O	-
Time_Of_State_Count_Reset	BACnetDatetime	-	O	-
Elapsed_Active_Time	Unsigned	-	O	-
Time_Of_Active_Time_Reset	BACnetDatetime	-	O	-
Time_Delay	Unsigned	-	O	-
Notification_Class	Unsigned	-	O	-
Alarm_Value	BACnetBinaryPV	-	O	-
Event_Enable	BACnetEventTransitionBits	-	O	-
Acked_Transitions	BACnetEventTransitionBits	-	O	-
Notify_Type	BACnetNotifyType	-	O	-
Event_Time_Stamps	BACnetArray[N] of BACnetTimeStamp	-	O	-
Profile_Name	CharacterString	-	O	-

© HMS Industrial Networks S.L.U - All rights reserved
This information is subject to change without notice

5.3.3 OnOff_command (Binary Output Object Type)

It sets the indoor unit to On or Off.

Property Identifier	Property Datatype	Value	ASHRAE	IBOX
Object_Identifier	BACnetObjectIdentifier	(Binary Output, 0)	R	R
Object_Name	CharacterString	“OnOff_command”	R	R
Object_Type	BACnetObjectType	BINARY_OUTPUT (4)	R	R
Present_Value	BACnetBinaryPV	INACTIVE (0) / ACTIVE (1)	W	W
Description	CharacterString	-	O	-
Device_Type	CharacterString	-	O	-
Status_Flags	BACnetStatusFlags	{FALSE, FALSE, FALSE, FALSE}	R	R
Event_State	BACnetEventState	STATE_NORMAL (0)	R	R
Reliability	BACnetReliability	NO_FAULT_DETECTED (0)	O	R
Out_Of_Service	BOOLEAN	FALSE	R	R
Polarity	BACnetPolarity	NORMAL (0)	R	R
Inactive_Text	CharacterString	"Off"	O	R
Active_Text	CharacterString	“On"	O	R
Change_Of_State_Time	BACnetDatetime	-	O	-
Change_Of_State_Count	Unsigned	-	O	-
Time_Of_State_Count_Reset	BACnetDatetime	-	O	-
Elapsed_Active_Time	Unsigned	-	O	-
Time_Of_Active_Time_Reset	BACnetDatetime	-	O	-
Minimum_Off_Time	Unsigned32	-	O	-
Minimum_On_Time	Unsigned32	-	O	-
Priority_Array	BACnetPriorityArray	BACnetPriorityArray	R	R
Relinquish_Default	BACnetBinaryPV	INACTIVE (0)	R	R
Time_Delay	Unsigned	-	O	-
Notification_Class	Unsigned	-	O	-
Feedback_Value	BACnetBinaryPV	-	O	-
Event_Enable	BACnetEventTransitionBits	-	O	-
Acked_Transitions	BACnetEventTransitionBits	-	O	-
Notify_Type	BACnetNotifyType	-	O	-
Event_Time_Stamps	BACnetArray[N] of BACnetTimeStamp	-	O	-
Profile_Name	CharacterString	-	O	-

© HMS Industrial Networks S.L.U - All rights reserved
This information is subject to change without notice

5.3.4 Mode_status (Multistate Input Object Type)

It indicates the active mode for the indoor unit.

Property Identifier	Property Datatype	Value	ASHRAE	IBOX
Object_Identifier	BACnetObjectIdentifier	(Multi-state Input, 0)	R	R
Object_Name	CharacterString	"Mode_status"	R	R
Object_Type	BACnetObjectType	MULTISTATE_INPUT (13)	R	R
Present_Value	Unsigned	1 ~ 5	R	R
Description	CharacterString	-	O	-
Device_Type	CharacterString	-	O	-
Status_Flags	BACnetStatusFlags	{FALSE, FALSE/TRUE, FALSE, FALSE}	R	R
Event_State	BACnetEventState	STATE_NORMAL (0)	R	R
Reliability	BACnetReliability	NO_FAULT_DETECTED (0), UNRELIABLE_OTHER (7)	O	R
Out_Of_Service	BOOLEAN	FALSE	R	R
Number_Of_States	Unsigned	5	R	R
State_Text	BACnetArray[N] of CharacterString	*Check **Mode Status setting table** below.*	O	R
Time_Delay	Unsigned	-	O	-
Notification_Class	Unsigned	-	O	-
Alarm_Values	List of Unsigned	-	O	-
Fault_Values	List of Unsigned	-	O	-
Event_Enable	BACnetEventTransitionBits	-	O	-
Acked_Transitions	BACnetEventTransitionBits	-	O	-
Notify_Type	BACnetNotifyType	-	O	-
Event_Time_Stamps	BACnetArray[N] of BACnetTimeStamp	-	O	-
Profile_Name	CharacterString	-	O	-

Mode status setting table

Mode status interpretation is possible using the value in the following correspondence table.

Pesent_Value	Contents displayed in State_Text
1	Heat
2	Cool
3	Fan
4	Dry
5	Auto

© HMS Industrial Networks S.L.U - All rights reserved
This information is subject to change without notice

5.3.5 Mode_command (Multistate Output Object Type)

It allows control over the indoor unit's mode.

Property Identifier	Property Datatype	Value	ASHRAE	IBOX
Object_Identifier	BACnetObjectIdentifier	(Multi-state Output, 0)	R	R
Object_Name	CharacterString	"Mode_command"	R	R
Object_Type	BACnetObjectType	MULTISTATE_OUTPUT (14)	R	R
Present_Value	Unsigned	1 ~ 5	W	W
Description	CharacterString	-	O	-
Device_Type	CharacterString	-	O	-
Status_Flags	BACnetStatusFlags	{FALSE, FALSE, FALSE, FALSE}	R	R
Event_State	BACnetEventState	STATE_NORMAL (0)	R	R
Reliability	BACnetReliability	NO_FAULT_DETECTED (0)	O	R
Out_Of_Service	BOOLEAN	FALSE	R	R
Number_Of_States	Unsigned	5	R	R
State_Text	BACnetArray[N] of CharacterString	*Check **Mode Command setting table** below*	O	R
Priority_Array	BACnetPriorityArray	BACnetPriorityArray	R	R
Relinquish_Default	Unsigned	1	R	R
Time_Delay	Unsigned	-	O	-
Notification_Class	Unsigned	-	O	-
Feedback_Value	Unsigned	-	O	-
Event_Enable	BACnetEventTransitionBits	-	O	-
Acked_Transitions	BACnetEventTransitionBits	-	O	-
Notify_Type	BACnetNotifyType	-	O	-
Event_Time_Stamps	BACnetArray[N] of BACnetTimeStamp	-	O	-
Profile_Name	CharacterString	-	O	-

Mode Command setting table

Mode commands can be set using the values in the following correspondence table.

Pesent_Value	Contents displayed in State_Text
1	Heat
2	Cool
3	Fan
4	Dry
5	Auto

© HMS Industrial Networks S.L.U - All rights reserved
This information is subject to change without notice

5.3.6 Setpoint_status (Analog Input Object Type)

It indicates the current setpoint temperature in the indoor unit.

Property Identifier	Property Datatype	Value	ASHRAE	IBOX
Object_Identifier	BACnetObjectIdentifier	(Analog Input, 0)	R	R
Object_Name	CharacterString	“SetPoint_status”	R	R
Object_Type	BACnetObjectType	ANALOG_INPUT (0)	R	R
Present_Value*	REAL	16…31 ºC // 61…89 ºF	R	R
Description	CharacterString	-	O	-
Device_Type	CharacterString	-	O	-
Status_Flags	BACnetStatusFlags	{FALSE, FALSE/TRUE, FALSE, FALSE}	R	R
Event_State	BACnetEventState	STATE_NORMAL (0)	R	R
Reliability	BACnetReliability	NO_FAULT_DETECTED (0), UNRELIABLE_OTHER (7)	O	R
Out_Of_Service	BOOLEAN	FALSE	R	R
Update_Interval	Unsigned	-	O	-
Units *	BACnetEngineeringUnits	Degrees Celsius (62), Degrees Fahrenheit (64)	R	R
Min_Pres_Value *	REAL	16 // 61	O	R
Max_Pres_Value *	REAL	31 // 89	O	R
Resolution	REAL	-	O	-
COV_Increment	REAL	0	O	W
Time_Delay	Unsigned	-	O	-
Notification_Class	Unsigned	-	O	-
High_Limit	REAL	-	O	-
Low_Limit	REAL	-	O	-
Deadband	REAL	-	O	-
Limit_Enable	BACnetLimitEnable	-	O	-
Event_Enable	BACnetEventTransitionBits	-	O	-
Acked_Transitions	BACnetEventTransitionBits	-	O	-
Notify_Type	BACnetNotifyType	-	O	-
Event_Time_Stamps	BACnetArray[N] of BACnetTimeStamp	-	O	-
Profile_Name	CharacterString	-	O	-

* Use of Celsius or Fahrenheits units can be selected throught the switch configuration. Check section 6.1 for more information.

© HMS Industrial Networks S.L.U - All rights reserved
This information is subject to change without notice

5.3.7 Setpoint_command (Analog Output Object Type)

It sets the desired temperature in the indoor unit.

Property Identifier	Property Datatype	Value	ASHRAE	IBOX
Object_Identifier	BACnetObjectIdentifier	(Analog Output, 0)	R	R
Object_Name	CharacterString	“SetPoint_command”	R	R
Object_Type	BACnetObjectType	ANALOG_OUTPUT (1)	R	R
Present_Value *	REAL	16…31 ºC // 61…89 ºF	R	R
Description	CharacterString	-	O	-
Device_Type	CharacterString	-	O	-
Status_Flags	BACnetStatusFlags	{FALSE, FALSE, FALSE, FALSE}	R	R
Event_State	BACnetEventState	STATE_NORMAL (0)	R	R
Reliability	BACnetReliability	NO_FAULT_DETECTED (0)	O	R
Out_Of_Service	BOOLEAN	FALSE	R	R
Update_Interval	Unsigned	-	O	-
Units *	BACnetEngineeringUnits	Degrees Celsius (62), Degrees Fahrenheit (64)	R	R
Min_Pres_Value	REAL	16 // 61	O	R
Max_Pres_Value	REAL	31 // 89	O	R
Resolution	REAL	-	O	-
COV_Increment	REAL	0	O	W
Priority_Array	BACnetPriorityArray	BACnetPriorityArray	R	R
Relinquish_Default	Unsigned	22	R	R
Time_Delay	Unsigned	-	O	-
Notification_Class	Unsigned	-	O	-
High_Limit	REAL	-	O	-
Low_Limit	REAL	-	O	-
Deadband	REAL	-	O	-
Limit_Enable	BACnetLimitEnable	-	O	-
Event_Enable	BACnetEventTransitionBits	-	O	-
Acked_Transitions	BACnetEventTransitionBits	-	O	-
Notify_Type	BACnetNotifyType	-	O	-
Event_Time_Stamps	BACnetArray[N] of BACnetTimeStamp	-	O	-
Profile_Name	CharacterString	-	O	-

* Use of Celsius or Fahrenheits units can be selected throught the switch configuration. Check section 6.1 for more information.

© HMS Industrial Networks S.L.U - All rights reserved
This information is subject to change without notice

5.3.8 FanSpeed_status (Multistate Input Object Type)

It indicates the fan speed status of the indoor unit.

Property Identifier	Property Datatype	Value	ASHRAE	IBOX
Object_Identifier	BACnetObjectIdentifier	(Multi-state Input, 1)	R	R
Object_Name	CharacterString	"FanSpeed_status"	R	R
Object_Type	BACnetObjectType	MULTISTATE_INPUT(13)	R	R
Present_Value	Unsigned	1 ~ 5	R	R
Description	CharacterString	-	O	-
Device_Type	CharacterString	-	O	-
Status_Flags	BACnetStatusFlags	{FALSE, FALSE/TRUE, FALSE, FALSE}	R	R
Event_State	BACnetEventState	STATE_NORMAL (0)	R	R
Reliability	BACnetReliability	NO_FAULT_DETECTED (0), UNRELIABLE_OTHER (7)	O	R
Out_Of_Service	BOOLEAN	FALSE/TRUE	R	R
Number_Of_States	Unsigned	5	R	R
State_Text	BACnetArray[N] of CharacterString	*Check **Fan Speed status setting table** below.*	O	R
Time_Delay	Unsigned	-	O	-
Notification_Class	Unsigned	-	O	-
Alarm_Values	List of Unsigned	-	O	-
Fault_Values	List of Unsigned	-	O	-
Event_Enable	BACnetEventTransitionBits	-	O	-
Acked_Transitions	BACnetEventTransitionBits	-	O	-
Notify_Type	BACnetNotifyType	-	O	-
Event_Time_Stamps	BACnetArray[N] of BACnetTimeStamp	-	O	-
Profile_Name	CharacterString	-	O	-

Fan Speed status setting table

Fan speed interpretation is possible using the value in the following correspondence table.

Pesent_Value	Contents displayed in State_Text
1	Auto
2	Fan Speed 1
3	Fan Speed 2
4	Fan Speed 3
5	Fan Speed 4

© HMS Industrial Networks S.L.U - All rights reserved
This information is subject to change without notice

5.3.9 FanSpeed_command (Multistate Output Object Type)

It allows control over the fan speed for the indoor unit.

Property Identifier	Property Datatype	Value	ASHRAE	IBOX
Object_Identifier	BACnetObjectIdentifier	(Multi-state Output, 1)	R	R
Object_Name	CharacterString	“FanSpeed_command”	R	R
Object_Type	BACnetObjectType	MULTISTATE_OUTPUT (14)	R	R
Present_Value	Unsigned	1 ~ 5	W	W
Description	CharacterString	-	O	-
Device_Type	CharacterString	-	O	-
Status_Flags	BACnetStatusFlags	{FALSE, FALSE, FALSE, FALSE}	R	R
Event_State	BACnetEventState	STATE_NORMAL (0)	R	R
Reliability	BACnetReliability	NO_FAULT_DETECTED (0)	O	R
Out_Of_Service	BOOLEAN	FALSE	R	R
Number_Of_States	Unsigned	5	R	R
State_Text	BACnetArray[N] of CharacterString	*Check **Fan Speed command setting table** below*	O	R
Priority_Array	BACnetPriorityArray	BACnetPriorityArray	R	R
Relinquish_Default	Unsigned	1	R	R
Time_Delay	Unsigned	-	O	-
Notification_Class	Unsigned	-	O	-
Feedback_Value	Unsigned	-	O	-
Event_Enable	BACnetEventTransitionBits	-	O	-
Acked_Transitions	BACnetEventTransitionBits	-	O	-
Notify_Type	BACnetNotifyType	-	O	-
Event_Time_Stamps	BACnetArray[N] of BACnetTimeStamp	-	O	-
Profile_Name	CharacterString	-	O	-

Fan Speed command setting table

Fan speed interpretation is possible using the value in the following correspondence table.

Pesent_Value	Contents displayed in State_Text
1	Auto
2	Fan Speed 1
3	Fan Speed 2
4	Fan Speed 3
5	Fan Speed 4

© HMS Industrial Networks S.L.U - All rights reserved
This information is subject to change without notice

5.3.10 AirDirectionUD_status (Multistate Input Object Type)

It indicates the status of the vertical vane (Up/Down) for the indoor unit.

Property Identifier	Property Datatype	Value	ASHRAE	IBOX
Object_Identifier	BACnetObjectIdentifier	(Multi-state Input, 2)	R	R
Object_Name	CharacterString	"AirDirectionUD_status"	R	R
Object_Type	BACnetObjectType	MULTISTATE_INPUT(13)	R	R
Present_Value	Unsigned	1 ~ 7	R	R
Description	CharacterString	-	O	-
Device_Type	CharacterString	-	O	-
Status_Flags	BACnetStatusFlags	{FALSE, FALSE/TRUE, FALSE, FALSE}	R	R
Event_State	BACnetEventState	STATE_NORMAL (0)	R	R
Reliability	BACnetReliability	NO_FAULT_DETECTED (0), UNRELIABLE_OTHER (7)	O	R
Out_Of_Service	BOOLEAN	FALSE/TRUE	R	R
Number_Of_States	Unsigned	7	R	R
State_Text	BACnetArray[N] of CharacterString	*Check **Air Direction Status setting table** below.*	O	R
Time_Delay	Unsigned	-	O	-
Notification_Class	Unsigned	-	O	-
Alarm_Values	List of Unsigned	-	O	-
Fault_Values	List of Unsigned	-	O	-
Event_Enable	BACnetEventTransitionBits	-	O	-
Acked_Transitions	BACnetEventTransitionBits	-	O	-
Notify_Type	BACnetNotifyType	-	O	-
Event_Time_Stamps	BACnetArray[N] of BACnetTimeStamp	-	O	-
Profile_Name	CharacterString	-	O	-

Air direction Up/Down status setting table

Air direction interpretation is possible using the value in the following correspondence table.

Pesent_Value	Contents displayed in State_Text
1	Auto
2	Up
3	Mid-1
4	Mid-2
5	Mid-3
6	Down
7	Swing

© HMS Industrial Networks S.L.U - All rights reserved
This information is subject to change without notice

5.3.11 RoomTemperature (Analog Input Object Type)

It indicates the room temperature from the sensor in the indoor unit.

Property Identifier	Property Datatype	Value	ASHRAE	IBOX
Object_Identifier	BACnetObjectIdentifier	(Analog Input, 1)	R	R
Object_Name	CharacterString	“RoomTemperature”	R	R
Object_Type	BACnetObjectType	ANALOG_INPUT (0)	R	R
Present_Value	REAL	10…38ºC // 50…100ºF	R	R
Description	CharacterString	-	O	-
Device_Type	CharacterString	-	O	-
Status_Flags	BACnetStatusFlags	{FALSE, FALSE/TRUE, FALSE, FALSE}	R	R
Event_State	BACnetEventState	STATE_NORMAL (0)	R	R
Reliability	BACnetReliability	NO_FAULT_DETECTED (0), UNRELIABLE_OTHER (7)	O	R
Out_Of_Service	BOOLEAN	FALSE/TRUE	R	R
Update_Interval	Unsigned	-	O	-
Units	BACnetEngineeringUnits	Degrees Celsius (62) Degrees Fahrenheit (64)	R	R
Min_Pres_Value	REAL	-	O	-
Max_Pres_Value	REAL	-	O	-
Resolution	REAL	-	O	-
COV_Increment	REAL	0	O	W
Time_Delay	Unsigned	-	O	-
Notification_Class	Unsigned	-	O	-
High_Limit	REAL	-	O	-
Low_Limit	REAL	-	O	-
Deadband	REAL	-	O	-
Limit_Enable	BACnetLimitEnable	-	O	-
Event_Enable	BACnetEventTransitionBits	-	O	-
Acked_Transitions	BACnetEventTransitionBits	-	O	-
Notify_Type	BACnetNotifyType	-	O	-
Event_Time_Stamps	BACnetArray[N] of BACnetTimeStamp	-	O	-
Profile_Name	CharacterString	-	O	-

© HMS Industrial Networks S.L.U - All rights reserved
This information is subject to change without notice

5.3.12 AirDirectionUD_command (Multistate Output Object Type)

It allows control over the vertical air direction (Up/Down) for the indoor unit.

Property Identifier	Property Datatype	Value	ASHRAE	IBOX
Object_Identifier	BACnetObjectIdentifier	(Multi-state Output, 3)	R	R
Object_Name	CharacterString	“AirDirectionUD_command”	R	R
Object_Type	BACnetObjectType	MULTISTATE_OUTPUT (14)	R	R
Present_Value	Unsigned	1 ~ 7	W	W
Description	CharacterString	-	O	-
Device_Type	CharacterString	-	O	-
Status_Flags	BACnetStatusFlags	{FALSE, FALSE, FALSE, FALSE}	R	R
Event_State	BACnetEventState	STATE_NORMAL (0)	R	R
Reliability	BACnetReliability	NO_FAULT_DETECTED (0)	O	R
Out_Of_Service	BOOLEAN	FALSE	R	R
Number_Of_States	Unsigned	7	R	R
State_Text	BACnetArray[N] of CharacterString	*Check **Air Direction Command setting table** below*	O	R
Priority_Array	BACnetPriorityArray	-	R	R
Relinquish_Default	Unsigned	-	R	R
Time_Delay	Unsigned	-	O	-
Notification_Class	Unsigned	-	O	-
Feedback_Value	Unsigned	-	O	-
Event_Enable	BACnetEventTransitionBits	-	O	-
Acked_Transitions	BACnetEventTransitionBits	-	O	-
Notify_Type	BACnetNotifyType	-	O	-
Event_Time_Stamps	BACnetArray[N] of BACnetTimeStamp	-	O	-
Profile_Name	CharacterString	-	O	-

Air direction Up/Down Command setting table

Air direction commands can be set using the values in the following correspondence table.

Pesent_Value	Contents displayed in State_Text
1	Auto
2	Up
3	Mid-1
4	Mid-2
5	Mid-3
6	Down
7	Swing

© HMS Industrial Networks S.L.U - All rights reserved
This information is subject to change without notice

5.3.13 ErrorCode (Analog Input Object Type)

It indicates the current error present in the AC system.

Property Identifier	Property Datatype	Value	ASHRAE	IBOX
Object_Identifier	BACnetObjectIdentifier	(Analog Input, 2)	R	R
Object_Name	CharacterString	“ErrorCode”	R	R
Object_Type	BACnetObjectType	ANALOG_INPUT (0)	R	R
Present_Value	REAL	-1… 6846	R	R
Description	CharacterString	-	O	-
Device_Type	CharacterString	-	O	-
Status_Flags	BACnetStatusFlags	{FALSE, FALSE, FALSE, FALSE}	R	R
Event_State	BACnetEventState	STATE_NORMAL (0)	R	R
Reliability	BACnetReliability	NO_FAULT_DETECTED (0)	O	R
Out_Of_Service	BOOLEAN	FALSE	R	R
Update_Interval	Unsigned	300	O	-
Units	BACnetEngineeringUnits	NO_UNITS (95)	R	R
Min_Pres_Value	REAL	-	O	-
Max_Pres_Value	REAL	-	O	-
Resolution	REAL	-	O	-
COV_Increment	REAL	0	O	W
Time_Delay	Unsigned	-	O	-
Notification_Class	Unsigned	-	O	-
High_Limit	REAL	-	O	-
Low_Limit	REAL	-	O	-
Deadband	REAL	-	O	-
Limit_Enable	BACnetLimitEnable	-	O	-
Event_Enable	BACnetEventTransitionBits	-	O	-
Acked_Transitions	BACnetEventTransitionBits	-	O	-
Notify_Type	BACnetNotifyType	-	O	-
Event_Time_Stamps	BACnetArray[N] of BACnetTimeStamp	-	O	-
Profile_Name	CharacterString	-	O	-

© HMS Industrial Networks S.L.U - All rights reserved
This information is subject to change without notice

5.3.14 ErrorCodeM (Multistate Input Object Type)

It indicates the current error present in the AC system.

Property Identifier	Property Datatype	Value	ASHRAE	IBOX
Object_Identifier	BACnetObjectIdentifier	(Multi-state Input, 2)	R	R
Object_Name	CharacterString	“ErrorCodeM”	R	R
Object_Type	BACnetObjectType	MULTISTATE_INPUT(13)	R	R
Present_Value	Unsigned	1 .. 48	R	R
Description	CharacterString	-	O	-
Device_Type	CharacterString	-	O	-
Status_Flags	BACnetStatusFlags	{FALSE, FALSE, FALSE, FALSE}	R	R
Event_State	BACnetEventState	STATE_NORMAL (0)	R	R
Reliability	BACnetReliability	NO_FAULT_DETECTED (0)	O	R
Out_Of_Service	BOOLEAN	FALSE	R	R
Number_Of_States	Unsigned	48	R	R
State_Text	BACnetArray[N] of CharacterString	Check the **Error Code table** below	O	R
Time_Delay	Unsigned	-	O	-
Notification_Class	Unsigned	-	O	-
Alarm_Values	List of Unsigned	-	O	-
Fault_Values	List of Unsigned	-	O	-
Event_Enable	BACnetEventTransitionBits	-	O	-
Acked_Transitions	BACnetEventTransitionBits	-	O	-
Notify_Type	BACnetNotifyType	-	O	-
Event_Time_Stamps	BACnetArray[N] of BACnetTimeStamp	-	O	-
Profile_Name	CharacterString	-	O	-

© HMS Industrial Networks S.L.U - All rights reserved
This information is subject to change without notice

Error Code table

In the table below you will find the error correspondence value.

Pesent_Value	Contents displayed in State_Text	Pesent_Value	Contents displayed in State_Text
1	-	25	4230
2	CommError	26	5101
3	1102	27	5102
4	1108	28	5104
5	1110	29	5105
6	1300	30	5106
7	1302	31	5107
8	1503	32	5110
9	1504	33	5202
10	1509	34	5300
11	1520	35	6600
12	2500	36	6602
13	2502	37	6603
14	2503	38	6606
15	4030	39	6607
16	4100	40	6608
17	4101	41	6831
18	4102	42	6832
19	4103	43	6840
20	4108	44	6841
21	4118	45	6844
22	4124	46	6845
23	4210	47	6846
24	4220	48	UNKOWN

© HMS Industrial Networks S.L.U - All rights reserved
This information is subject to change without notice

5.3.15 ErrorActive (Binary Input Object Type)

It indicates if there is an error active in the indoor unit.

Property Identifier	Property Datatype	Value	ASHRAE	IBOX
Object_Identifier	BACnetObjectIdentifier	(Binary Input, 1)	R	R
Object_Name	CharacterString	“ErrorActive”	R	R
Object_Type	BACnetObjectType	BINARY_INPUT (3)	R	R
Present_Value	BACnetBinaryPV	INACTIVE (0) / ACTIVE (1)	R	R
Description	CharacterString	-	O	-
Device_Type	CharacterString	-	O	-
Status_Flags	BACnetStatusFlags	{FALSE, FALSE, FALSE, FALSE}	R	R
Event_State	BACnetEventState	STATE_NORMAL (0)	R	R
Reliability	BACnetReliability	NO_FAULT_DETECTED (0)	O	R
Out_Of_Service	BOOLEAN	FALSE	R	R
Polarity	BACnetPolarity	NORMAL (0)	R	R
Inactive_Text	CharacterString	"No"	O	R
Active_Text	CharacterString	“Error”	O	R
Change_Of_State_Time	BACnetDatetime	-	O	-
Change_Of_State_Count	Unsigned	-	O	-
Time_Of_State_Count_Reset	BACnetDatetime	-	O	-
Elapsed_Active_Time	Unsigned	-	O	-
Time_Of_Active_Time_Reset	BACnetDatetime	-	O	-
Time_Delay	Unsigned	-	O	-
Notification_Class	Unsigned	-	O	-
Alarm_Value	BACnetBinaryPV	-	O	-
Event_Enable	BACnetEventTransitionBits	-	O	-
Acked_Transitions	BACnetEventTransitionBits	-	O	-
Notify_Type	BACnetNotifyType	-	O	-
Event_Time_Stamps	BACnetArray[N] of BACnetTimeStamp	-	O	-
Profile_Name	CharacterString	-	O	-

© HMS Industrial Networks S.L.U - All rights reserved
This information is subject to change without notice

5.3.16 OnTimeCounter (Analog Value Object Type)

It indicates the AC unit uptime.

Property Identifier	Property Datatype	Value	ASHRAE	IBOX
Object_Identifier	BACnetObjectIdentifier	(Analog Value, 0)	R	R
Object_Name	CharacterString	“OnTimeCounter”	R	R
Object_Type	BACnetObjectType	ANALOG_VALUE (2)	R	R
Present_Value	REAL	0 .. 65535	R	R
Description	CharacterString	-	O	-
Status_Flags	BACnetStatusFlags	{FALSE, FALSE, FALSE, FALSE}	R	R
Event_State	BACnetEventState	STATE_NORMAL (0)	R	R
Reliability	BACnetReliability	NO_FAULT_DETECTED (0)	O	R
Out_Of_Service	BOOLEAN	FALSE	R	R
Update_Interval	Unsigned	-	O	-
Units	BACnetEngineeringUnits	Hours (71)	R	R
Min_Pres_Value	REAL	-	O	-
Max_Pres_Value	REAL	-	O	-
Resolution	REAL	-	O	-
COV_Increment	REAL	0	O	W
Time_Delay	Unsigned	-	O	-
Notification_Class	Unsigned	-	O	-
High_Limit	REAL	-	O	-
Low_Limit	REAL	-	O	-
Deadband	REAL	-	O	-
Limit_Enable	BACnetLimitEnable	-	O	-
Event_Enable	BACnetEventTransitionBits	-	O	-
Acked_Transitions	BACnetEventTransitionBits	-	O	-
Notify_Type	BACnetNotifyType	-	O	-
Event_Time_Stamps	BACnetArray[N] of BACnetTimeStamp	-	O	-
Profile_Name	CharacterString	-	O	-

© HMS Industrial Networks S.L.U - All rights reserved
This information is subject to change without notice

5.3.17 Occupancy (Multistate Value Object Type)

It indicates the use or not of the occupancy function. Check section 7.4 for more information.

Property Identifier	Property Datatype	Value	ASHRAE	IBOX
Object_Identifier	BACnetObjectIdentifier	(Multi-state Output, 0)	R	R
Object_Name	CharacterString	"Occupancy"	R	R
Object_Type	BACnetObjectType	MULTISTATE_VALUE (19)	R	R
Present_Value	Unsigned	1 ~ 3	W	W
Description	CharacterString	-	O	-
Status_Flags	BACnetStatusFlags	{FALSE, FALSE, FALSE, FALSE}	R	R
Event_State	BACnetEventState	STATE_NORMAL (0)	R	R
Reliability	BACnetReliability	NO_FAULT_DETECTED (0)	O	R
Out_Of_Service	BOOLEAN	FALSE	R	R
Number_Of_States	Unsigned	3	R	R
State_Text	BACnetArray[N] of CharacterString	*Check **Occupancy setting table** below*	O	R
Priority_Array	BACnetPriorityArray	-	R	-
Relinquish_Default	Unsigned	-	R	-
Time_Delay	Unsigned	-	O	-
Notification_Class	Unsigned	-	O	-
Alarm_Value	Unsigned	-	O	-
Fault_Value	Unsigned		O	-
Event_Enable	BACnetEventTransitionBits	-	O	-
Acked_Transitions	BACnetEventTransitionBits	-	O	-
Notify_Type	BACnetNotifyType	-	O	-
Event_Time_Stamps	BACnetArray[N] of BACnetTimeStamp	-	O	-
Profile_Name	CharacterString	-	O	-

Occupancy values table

Check possible Occupancy values in the following correspondence table.

Pesent_Value	Contents displayed in State_Text
1	Occupied
2	Unoccupied
3	Disabled

© HMS Industrial Networks S.L.U - All rights reserved
This information is subject to change without notice

5.3.18 OccupiedCoolSetPoint (Analog Value Object Type)

It indicates the current Setpoint when Cool mode is selected and Occupancy is enabled and the room is occupied. Check section 7.4 for more information.

Property Identifier	Property Datatype	Value	ASHRAE	IBOX
Object_Identifier	BACnetObjectIdentifier	(Analog Value, 1)	R	R
Object_Name	CharacterString	“OccupiedCoolSetPoint”	R	R
Object_Type	BACnetObjectType	ANALOG_VALUE (2)	R	R
Present_Value	REAL	0 .. 65535	R	R
Description	CharacterString	-	O	-
Status_Flags	BACnetStatusFlags	{FALSE, FALSE, FALSE, FALSE}	R	R
Event_State	BACnetEventState	STATE_NORMAL (0)	R	R
Reliability	BACnetReliability	NO_FAULT_DETECTED (0)	O	R
Out_Of_Service	BOOLEAN	FALSE	R	R
Update_Interval	Unsigned	-	O	-
Units	BACnetEngineeringUnits	Hours (71)	R	R
Min_Pres_Value	REAL	-	O	-
Max_Pres_Value	REAL	-	O	-
Resolution	REAL	-	O	-
COV_Increment	REAL	0	O	W
Time_Delay	Unsigned	-	O	-
Notification_Class	Unsigned	-	O	-
High_Limit	REAL	-	O	-
Low_Limit	REAL	-	O	-
Deadband	REAL	-	O	-
Limit_Enable	BACnetLimitEnable	-	O	-
Event_Enable	BACnetEventTransitionBits	-	O	-
Acked_Transitions	BACnetEventTransitionBits	-	O	-
Notify_Type	BACnetNotifyType	-	O	-
Event_Time_Stamps	BACnetArray[N] of BACnetTimeStamp	-	O	-
Profile_Name	CharacterString	-	O	-

© HMS Industrial Networks S.L.U - All rights reserved
This information is subject to change without notice

5.3.19 OccupiedHeatSetPoint (Analog Value Object Type)

It indicates the current Setpoint when Heat mode is selected and Occupancy is enabled and the room is occupied. Check section 7.4 for more information.

Property Identifier	Property Datatype	Value	ASHRAE	IBOX
Object_Identifier	BACnetObjectIdentifier	(Analog Value, 2)	R	R
Object_Name	CharacterString	“OccupiedHeatSetPoint”	R	R
Object_Type	BACnetObjectType	ANALOG_VALUE (2)	R	R
Present_Value	REAL	0 .. 65535	R	R
Description	CharacterString	-	O	-
Status_Flags	BACnetStatusFlags	{FALSE, FALSE, FALSE, FALSE}	R	R
Event_State	BACnetEventState	STATE_NORMAL (0)	R	R
Reliability	BACnetReliability	NO_FAULT_DETECTED (0)	O	R
Out_Of_Service	BOOLEAN	FALSE	R	R
Update_Interval	Unsigned	-	O	-
Units	BACnetEngineeringUnits	Hours (71)	R	R
Min_Pres_Value	REAL	-	O	-
Max_Pres_Value	REAL	-	O	-
Resolution	REAL	-	O	-
COV_Increment	REAL	0	O	W
Time_Delay	Unsigned	-	O	-
Notification_Class	Unsigned	-	O	-
High_Limit	REAL	-	O	-
Low_Limit	REAL	-	O	-
Deadband	REAL	-	O	-
Limit_Enable	BACnetLimitEnable	-	O	-
Event_Enable	BACnetEventTransitionBits	-	O	-
Acked_Transitions	BACnetEventTransitionBits	-	O	-
Notify_Type	BACnetNotifyType	-	O	-
Event_Time_Stamps	BACnetArray[N] of BACnetTimeStamp	-	O	-
Profile_Name	CharacterString	-	O	-

© HMS Industrial Networks S.L.U - All rights reserved
This information is subject to change without notice

5.3.20 UnoccupiedCoolSetPoint (Analog Value Object Type)

It indicates the current Setpoint when Cool mode is selected and Occupancy is enabled and the room is unoccupied. Check section 7.4 for more information.

Property Identifier	Property Datatype	Value	ASHRAE	IBOX
Object_Identifier	BACnetObjectIdentifier	(Analog Value, 3)	R	R
Object_Name	CharacterString	“UnoccupiedCoolSetPoint”	R	R
Object_Type	BACnetObjectType	ANALOG_VALUE (2)	R	R
Present_Value	REAL	0 .. 65535	R	R
Description	CharacterString	-	O	-
Status_Flags	BACnetStatusFlags	{FALSE, FALSE, FALSE, FALSE}	R	R
Event_State	BACnetEventState	STATE_NORMAL (0)	R	R
Reliability	BACnetReliability	NO_FAULT_DETECTED (0)	O	R
Out_Of_Service	BOOLEAN	FALSE	R	R
Update_Interval	Unsigned	-	O	-
Units	BACnetEngineeringUnits	Hours (71)	R	R
Min_Pres_Value	REAL	-	O	-
Max_Pres_Value	REAL	-	O	-
Resolution	REAL	-	O	-
COV_Increment	REAL	0	O	W
Time_Delay	Unsigned	-	O	-
Notification_Class	Unsigned	-	O	-
High_Limit	REAL	-	O	-
Low_Limit	REAL	-	O	-
Deadband	REAL	-	O	-
Limit_Enable	BACnetLimitEnable	-	O	-
Event_Enable	BACnetEventTransitionBits	-	O	-
Acked_Transitions	BACnetEventTransitionBits	-	O	-
Notify_Type	BACnetNotifyType	-	O	-
Event_Time_Stamps	BACnetArray[N] of BACnetTimeStamp	-	O	-
Profile_Name	CharacterString	-	O	-

© HMS Industrial Networks S.L.U - All rights reserved
This information is subject to change without notice

5.3.21 UnoccupiedHeatSetPoint (Analog Value Object Type)

It indicates the current Setpoint when Heat mode is selected and Occupancy is enabled and the room is unoccupied. Check section 7.4 for more information.

Property Identifier	Property Datatype	Value	ASHRAE	IBOX
Object_Identifier	BACnetObjectIdentifier	(Analog Value, 4)	R	R
Object_Name	CharacterString	“UnoccupiedHeatSetPoint”	R	R
Object_Type	BACnetObjectType	ANALOG_VALUE (2)	R	R
Present_Value	REAL	0 .. 65535	R	R
Description	CharacterString	-	O	-
Status_Flags	BACnetStatusFlags	{FALSE, FALSE, FALSE, FALSE}	R	R
Event_State	BACnetEventState	STATE_NORMAL (0)	R	R
Reliability	BACnetReliability	NO_FAULT_DETECTED (0)	O	R
Out_Of_Service	BOOLEAN	FALSE	R	R
Update_Interval	Unsigned	-	O	-
Units	BACnetEngineeringUnits	Hours (71)	R	R
Min_Pres_Value	REAL	-	O	-
Max_Pres_Value	REAL	-	O	-
Resolution	REAL	-	O	-
COV_Increment	REAL	0	O	W
Time_Delay	Unsigned	-	O	-
Notification_Class	Unsigned	-	O	-
High_Limit	REAL	-	O	-
Low_Limit	REAL	-	O	-
Deadband	REAL	-	O	-
Limit_Enable	BACnetLimitEnable	-	O	-
Event_Enable	BACnetEventTransitionBits	-	O	-
Acked_Transitions	BACnetEventTransitionBits	-	O	-
Notify_Type	BACnetNotifyType	-	O	-
Event_Time_Stamps	BACnetArray[N] of BACnetTimeStamp	-	O	-
Profile_Name	CharacterString	-	O	-

© HMS Industrial Networks S.L.U - All rights reserved
This information is subject to change without notice

5.3.22 OccupancyContinuousCheck (Binary Value Object Type)

It indicates if the system is continuously checking the setpoint and occupancy conditions. Check section 7.4 for more information.

Property Identifier	Property Datatype	Value	ASHRAE	IBOX
Object_Identifier	BACnetObjectIdentifier	(Binary Value, 0)	R	R
Object_Name	CharacterString	“OccupancyContinuousCheck”	R	R
Object_Type	BACnetObjectType	BINARY_VALUE (5)	R	R
Present_Value	BACnetBinaryPV	INACTIVE (0) / ACTIVE (1)	W	W
Description	CharacterString	-	O	-
Status_Flags	BACnetStatusFlags	{FALSE, FALSE, FALSE, FALSE}	R	R
Event_State	BACnetEventState	STATE_NORMAL (0)	R	R
Reliability	BACnetReliability	NO_FAULT_DETECTED (0)	O	R
Out_Of_Service	BOOLEAN	FALSE	R	R
Inactive_Text	CharacterString	"Disable"	O	R
Active_Text	CharacterString	“Enable"	O	R
Change_Of_State_Time	BACnetDatetime	-	O	-
Change_Of_State_Count	Unsigned	-	O	-
Time_Of_State_Count_Reset	BACnetDatetime	-	O	-
Elapsed_Active_Time	Unsigned	-	O	-
Time_Of_Active_Time_Reset	BACnetDatetime	-	O	-
Minimum_Off_Time	Unsigned32	-	O	-
Minimum_On_Time	Unsigned32	-	O	-
Priority_Array	BACnetPriorityArray	BACnetPriorityArray	R	-
Relinquish_Default	BACnetBinaryPV	INACTIVE (0)	R	-
Time_Delay	Unsigned	-	O	-
Notification_Class	Unsigned	-	O	-
Alarm_Value	BACnetBinaryPV	-	O	-
Event_Enable	BACnetEventTransitionBits	-	O	-
Acked_Transitions	BACnetEventTransitionBits	-	O	-
Notify_Type	BACnetNotifyType	-	O	-
Event_Time_Stamps	BACnetArray[N] of BACnetTimeStamp	-	O	-
Profile_Name	CharacterString	-	O	-

© HMS Industrial Networks S.L.U - All rights reserved
This information is subject to change without notice

5.3.23 UnoccupiedDeadbandAction (Binary Value Object Type)

It indicates the action to be performed by the system when Unoccupancy is enabled and Room Temperature is within the deadband. Check section 7.4 for more information.

Property Identifier	Property Datatype	Value	ASHRAE	IBOX
Object_Identifier	BACnetObjectIdentifier	(Binary Value, 1)	R	R
Object_Name	CharacterString	“UnoccupiedDeadbandAction”	R	R
Object_Type	BACnetObjectType	BINARY_VALUE (5)	R	R
Present_Value	BACnetBinaryPV	INACTIVE (0) / ACTIVE (1)	W	W
Description	CharacterString	-	O	-
Status_Flags	BACnetStatusFlags	{FALSE, FALSE, FALSE, FALSE}	R	R
Event_State	BACnetEventState	STATE_NORMAL (0)	R	R
Reliability	BACnetReliability	NO_FAULT_DETECTED (0)	O	R
Out_Of_Service	BOOLEAN	FALSE	R	R
Inactive_Text	CharacterString	"Off"	O	R
Active_Text	CharacterString	“CurrentMode"	O	R
Change_Of_State_Time	BACnetDatetime	-	O	-
Change_Of_State_Count	Unsigned	-	O	-
Time_Of_State_Count_Reset	BACnetDatetime	-	O	-
Elapsed_Active_Time	Unsigned	-	O	-
Time_Of_Active_Time_Reset	BACnetDatetime	-	O	-
Minimum_Off_Time	Unsigned32	-	O	-
Minimum_On_Time	Unsigned32	-	O	-
Priority_Array	BACnetPriorityArray	BACnetPriorityArray	R	-
Relinquish_Default	BACnetBinaryPV	INACTIVE (0)	R	-
Time_Delay	Unsigned	-	O	-
Notification_Class	Unsigned	-	O	-
Alarm_Value	BACnetBinaryPV	-	O	-
Event_Enable	BACnetEventTransitionBits	-	O	-
Acked_Transitions	BACnetEventTransitionBits	-	O	-
Notify_Type	BACnetNotifyType	-	O	-
Event_Time_Stamps	BACnetArray[N] of BACnetTimeStamp	-	O	-
Profile_Name	CharacterString	-	O	-

© HMS Industrial Networks S.L.U - All rights reserved
This information is subject to change without notice

5.3.24 LockRemoteControl (Binary Value Object Type)

It indicates if control from the remote controller is locked or not.

Property Identifier	Property Datatype	Value	ASHRAE	IBOX
Object_Identifier	BACnetObjectIdentifier	(Binary Value, 2)	R	R
Object_Name	CharacterString	“LockRemoteControl”	R	R
Object_Type	BACnetObjectType	BINARY_VALUE (5)	R	R
Present_Value	BACnetBinaryPV	INACTIVE (0) / ACTIVE (1)	W	W
Description	CharacterString	-	O	-
Status_Flags	BACnetStatusFlags	{FALSE, FALSE, FALSE, FALSE}	R	R
Event_State	BACnetEventState	STATE_NORMAL (0)	R	R
Reliability	BACnetReliability	NO_FAULT_DETECTED (0)	O	R
Out_Of_Service	BOOLEAN	FALSE	R	R
Inactive_Text	CharacterString	"Locked"	O	R
Active_Text	CharacterString	“Unlocked"	O	R
Change_Of_State_Time	BACnetDatetime	-	O	-
Change_Of_State_Count	Unsigned	-	O	-
Time_Of_State_Count_Reset	BACnetDatetime	-	O	-
Elapsed_Active_Time	Unsigned	-	O	-
Time_Of_Active_Time_Reset	BACnetDatetime	-	O	-
Minimum_Off_Time	Unsigned32	-	O	-
Minimum_On_Time	Unsigned32	-	O	-
Priority_Array	BACnetPriorityArray	BACnetPriorityArray	R	-
Relinquish_Default	BACnetBinaryPV	INACTIVE (0)	R	-
Time_Delay	Unsigned	-	O	-
Notification_Class	Unsigned	-	O	-
Alarm_Value	BACnetBinaryPV	-	O	-
Event_Enable	BACnetEventTransitionBits	-	O	-
Acked_Transitions	BACnetEventTransitionBits	-	O	-
Notify_Type	BACnetNotifyType	-	O	-
Event_Time_Stamps	BACnetArray[N] of BACnetTimeStamp	-	O	-
Profile_Name	CharacterString	-	O	-

© HMS Industrial Networks S.L.U - All rights reserved
This information is subject to change without notice

6 Connections and switches

6.1 *Connect to the AC indoor unit interface*

The interface comes with a cable (1,5 m / 4.9 ft long) for direct connection to the internal control board of the AC indoor unit.

Disconnect mains power from the AC unit. Open the front cover of the indoor unit in order to have access to the internal control board. In the control board locate the socket connector marked as **CN105 (CN92** in some units).

Using the cable that comes with the interface, insert one of its connectors, the one installed in the shortest uncovered part, into the socket of the INBACMIT001I000 marked as **AC Unit**, and the other connector, the one in the largest uncovered part, into the socket **CN105** of the AC unit's control board. Fix the INBACMIT001I000 outside the AC indoor; remember that INBACMIT001I000 must be also connected to the BACnet network. Close the AC indoor unit's front cover again.

⚠ ***Important***: Do not modify the length of the cable supplied with the interface, it may affect to the correct operation of the interface

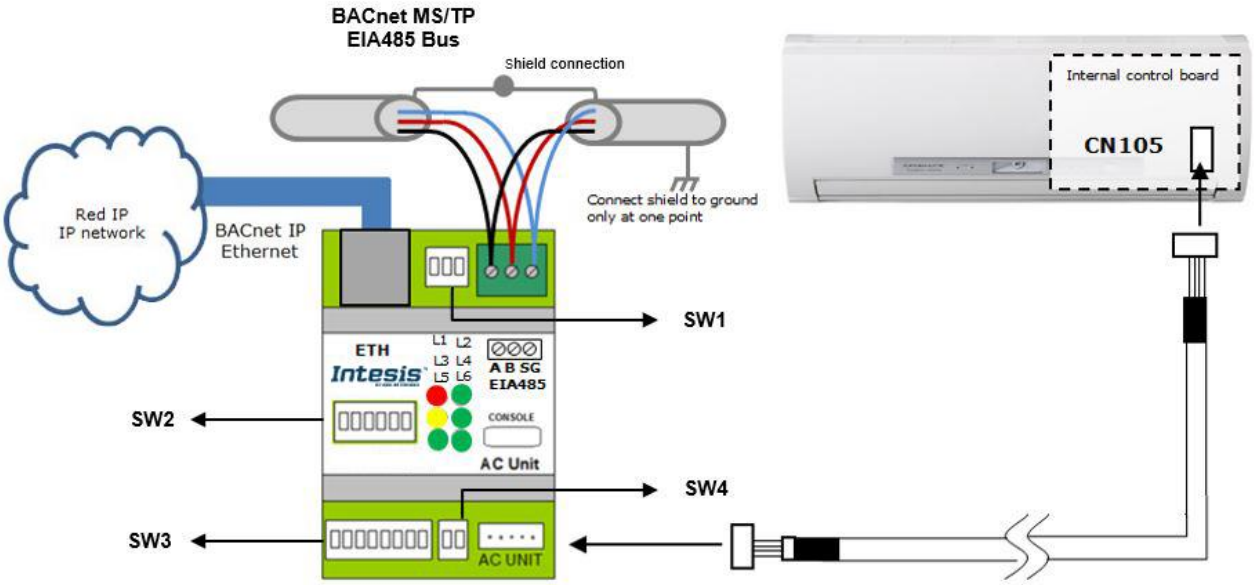

Figure 2.2 Connection diagram

Please, check the configuration for the AC unit to ensure proper control of the AC unit according to its specifications. Use **SW3** for that purpose.

SW3 - Celsius/Fahrenheit selection

Binary value $b_5 \ldots b_4$	Decimal value	Switches 1 2 3 4 5 6 7 8	Description
xxxx0xxx	0	x x x x ↓ x x x	Celsius degrees (default value)
xxxx1xxx	1	x x x x ↑ x x x	Fahrenheit degrees

⚠ ***Important***: Remember that switch changes only apply after an Intesis power cycle

© HMS Industrial Networks S.L.U - All rights reserved
This information is subject to change without notice

6.2 *Connect to BACnet MS/TP*

Connect the EIA485 bus wires to the plug-in terminal block (EIA485) of INBACMIT001I000; respect the polarity on this connection (A+ and B-).

Connect the ground signal to the plug-in terminal block (SG).

Respect the maximum distance of 1.200 meters for the bus, no loop or star topologies are allowed for EIA485 bus.

EIA-485 bus. Termination resistors and Fail-Safe Biasing mechanism

EIA-485 bus requires a 120Ω terminator resistor at each end of the bus to avoid signal reflections.

In order to prevent fail status detections by the receivers, which are *"listening"* to the bus, when all the transmitters' outputs are in three-state (high impedance), a fail-safe biasing mechanism is required. This mechanism provides a safe status (a correct voltage level) in the bus when all the transmitters' outputs are in three-state.

The INBACMIT001I000 gateway includes an on-board terminator resistor of 120Ω that can be connected to the EIA-485 bus by using DIP-switch **SW1**.

Some BACnet MS/TP EIA-485 Master devices can provide also internal 120Ω terminator resistor and/or fail-safe biasing. Check the technical documentation of the Master device connected to the EIA-485 network in each case.

SW1 settings

Binary value $b_2 \ldots b_0$	Decimal value	Switches 1 2 3	Description
0xx	**0**	↓ x x	EIA485 bus without termination resistor. The gateway is not at one end of the EIA485 bus (default value)
1xx	**1**	↑ x x	120 Ω termination resistor active. The gateway is at one end of the EIA485 bus
x00	**0**	x ↓ ↓	No bus polarization
x11	**3**	x ↑ ↑	Bus polarization active

Please, check as well configuration on **SW2** and **SW3** before connecting to BACnet MS/TP.

6.2.1 MS/TP MAC address switch configuration

MAC address can be configured using **SW2** DIP-Switch

Binary value $b_0 \ldots b_7$	Decimal value	*Switches* 1 2 3 4 5 6 7 8	MAC address
0000000x	0	↓ ↓ ↓ ↓ ↓ ↓ ↓ x	0
1000000x	1	↑ ↓ ↓ ↓ ↓ ↓ ↓ x	1
0100000x	2	↓ ↑ ↓ ↓ ↓ ↓ ↓ x	2
1100000x	3	↑ ↑ ↓ ↓ ↓ ↓ ↓ x	3
….	….	….	…
1011111x	125	↑ ↓ ↑ ↑ ↑ ↑ ↑ x	125
0111111x	126	↓ ↑ ↑ ↑ ↑ ↑ ↑ x	126
1111111x	127	↑ ↑ ↑ ↑ ↑ ↑ ↑ x	127

The MAC address selected my affect on the Device Instance. If the "Auto Device Instance" is used, keep in mind that the Device Instance will be build using the "Device Instance Base" + the address selected in SWP2 P1-P7. Please, check section 7.4 for more information.

© HMS Industrial Networks S.L.U - All rights reserved
This information is subject to change without notice

6.2.2 MS/TP activation and baudrate

Select the right baudrate for BACnet MS/TP communication using switch **SW3**.

Binary value $b_5...b_4$	Decimal value	Switches 1 2 3 4 5 6 7 8	Description
0xxxxxxx	**0**	↓ x x x x x x x	BACnet MS/TP active (default value)
1xxxxxxx	**1**	↑ x x x x x x x	BACnet IP active
x000xxxx	**0**	x ↓ ↓ ↓ x x x x	Autobaudrate (default value) *
x100xxxx	**1**	x ↑ ↓ ↓ x x x x	9600 bps
x010xxxx	**2**	x ↓ ↑ ↓ x x x x	192000 bps
x110xxxx	**3**	x ↑ ↑ ↓ x x x x	38400 bps
x001xxxx	**4**	x ↓ ↓ ↑ x x x x	57600 bps
x101xxxx	**5**	x ↑ ↓ ↑ x x x x	76800 bps
x011xxxx	**6**	x ↓ ↑ ↑ x x x x	115200 bps
x111xxxx	**7**	x ↑ ↑ ↑ x x x x	Autobaudrate *
xxxx0xxx	**0**	x x x x ↓ x x x	Celsius degrees (default value)
xxxx1xxx	**1**	x x x x ↑ x x x	Fahrenheit degrees

⚠ ***Important***: Remember that switch changes only apply after an Intesis power cycle

* Note: If Autobaudrate is selected, the INBACMIT001I000 will look for another BACnet MS/TP device with a fixed baudrate in order to match this value. Once detected, the baudrate will not be modified until a device reset is produced.

6.3 *Connect to BACnet IP*

Connect the RJ45 connector to the Ethernet connection (ETH) of INBACMIT001I000.

Respect same recommendations as per any other Ethernet communication network.

Remember to activate the IP interface through the **SW3** switch.

Binary value $b_5...b_4$	Decimal value	Switches 1 2 3 4 5 6 7 8	Description
0xxxxxxx	**0**	↓ x x x x x x x	BACnet MS/TP active (default value)
1xxxxxxx	**1**	↑ x x x x x x x	BACnet IP active

By default, the INBACMIT001I000 comes with a static IP address: **192.168.100.246**.

In order to change it, please use the configuration tool and select either DHCP or another static IP (recommended) that suits your integration project requirements. Check section 7.4 for more information.

6.3.1 BACnet Device Instance

If the “Auto Device Instance” is used, keep in mind that the Device Instance will be build using the “Device Instance Base” + the address selected in SWP2 P1-P7.

Binary value $b_0...b_7$	Decimal value	*Switches* 1 2 3 4 5 6 7 8	MAC address
0000000x	0	↓ ↓ ↓ ↓ ↓ ↓ ↓ x	0
1000000x	1	↑ ↓ ↓ ↓ ↓ ↓ ↓ x	1
0100000x	2	↓ ↑ ↓ ↓ ↓ ↓ ↓ x	2
1100000x	3	↑ ↑ ↓ ↓ ↓ ↓ ↓ x	3
….	….	….	…
1011111x	125	↑ ↓ ↑ ↑ ↑ ↑ ↑ x	125
0111111x	126	↓ ↑ ↑ ↑ ↑ ↑ ↑ x	126
1111111x	127	↑ ↑ ↑ ↑ ↑ ↑ ↑ x	127

⚠ ***Important***: Remember that switch changes only apply after an Intesis power cycle

© HMS Industrial Networks S.L.U - All rights reserved
This information is subject to change without notice

7 Set-up process and troubleshooting

7.1 *Pre-requisites*

In a BACnet MS/TP integration, it is necessary to have the BACnet MS/TP Master device operative and well connected to the BACnet MS/TP port of the INBACMIT001I000.

In a BACnet IP integration, it is necessary to have the BACnet IP client operative and well connected to the IP network and the INBACMIT001I000 connected to this same IP network through the ETH port.

Items supplied by HMS Networks for this integration are:

- Intesis INBACMIT001I000 interface with Mitsubishi Electric AC external protocol firmware loaded.
- Specific connection cable to connect Mitsubishi Electric AC unit with INBACMIT001I000 gateway.
- MiniUSB cable for console communication.
- Product documentation.

7.2 *Physical checking*

First point to look at to make sure that gateway is working properly is to check physical connections:

1.- Make sure that the supplied cable is correctly connected between the AC unit and the gateway. INBACMIT001I000 needs to be connected to the AC unit or externaly powered before starting the device configuration. Contact Intesis if you need to power your device without connecting it to the AC unit.

2.- Check that the AC unit is connected to mains.

3.- If using BACnet MS/TP, check the EIA485 connection from the gateway to the BACnet MS/TP. Remember to verify polarity and terminal resistors configuration. If using BACnet IP, check the IP network connections.

7.3 *LED status*

On start up, all leds blink once and then turn off. After that, depending on the type of connection (MS/TP or IP) and the processes carried out, LED status may change.

Please, check the table below for more information:

LED	Status	Description
L1 (red)	ON Steady	AC communication error
	Blinking	AC error
	Off	No errors present
L5 (green)	ON Steady	BACnet MS/TP link
	Blinking	Activity on the BACnet MS/TP bus
L6 (green)	ON Steady	Ethernet link
	Blinking	Activity on BACnet IP
L1+L4+L5	Blinking	Device in Bootloader mode
All	Blinking	Fatal Error
All	On Steady 1 sec	On start up (for testing purposes)

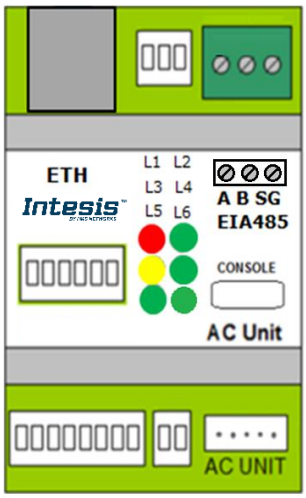

© HMS Industrial Networks S.L.U - All rights reserved
This information is subject to change without notice

7.4 *Occupancy*

Each indoor unit has its own occupancy signal. Remember that this signals needs to be feed by an external sensor which indicates if there is presense or not (occupancy). This signal is processed directly in the INBACMIT001I000.

When occupancy mode is active, according to current room temperature it will set the mode, setpoint and on/off, for example:

- Room Temperature > OCS: Setpoint = OCS, Mode = Cool, On/Off = On
- Room Temperature < OHS: Setpoint = OHS, Mode = Heat, On/Off = On
- OCS < Room Temperature > OHS: Setpoint = OCS/OHS depending on current mode (if Fan or Dry mode is active => no setpoint is sent), On/Off = On

When unoccupancy mode is active, according to current room temperature it will set the mode, setpoint and on/off, for example:

- Room Temperature > UCS: Setpoint = UCS, Mode = Cool, On/Off = On
- Room Temperature < UHS: Setpoint = UHS, Mode = Heat, On/Off = On
- UCS < Room Temperature > UHS: Setpoint = UCS/UHS depending on current mode (if Fan or Dry mode is active => no setpoint is sent), On/Off = On (if Unoccupancy Deadband Action is = 1)

These checks will be done each time the indoor unit occupancy status is changed, and if ***check continuously*** checkbox is checked, also each time the room temperature changes.

The configuration set on the occupany signals is applied from the very first moment the occupancy signal is enabled until the user changes the setpoint, mode or the On/Off signal, which disables occupancy functionality.

The minimum difference between Cool and Heat SetPoints must be 2ºC/4ºF.

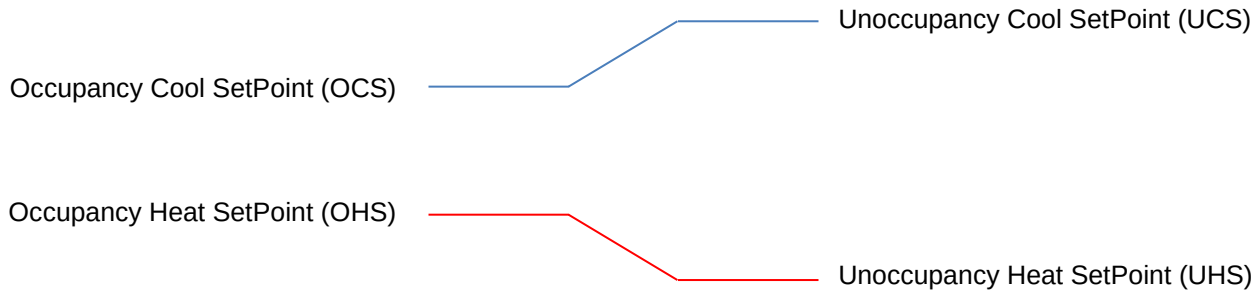

© HMS Industrial Networks S.L.U - All rights reserved
This information is subject to change without notice

7.5 *Configuration tool*

In order to check the status of the device, signals values and general configuration, the INBACMIT001I000 includes a configuration tool. This tool is accessible only through the Ethernet port, so keep in mind that you need to switch **SW3** P1 'ON'.

By default the device comes with a static IP, so please check that you are in the same network domain in order to connect. The default IP is: **192.168.100.246**.

7.5.1 Home

Once you reach the page, remember to login with your user and password. To access the login site, click on "User" or use the drop down menu on the top right corner for user selection.

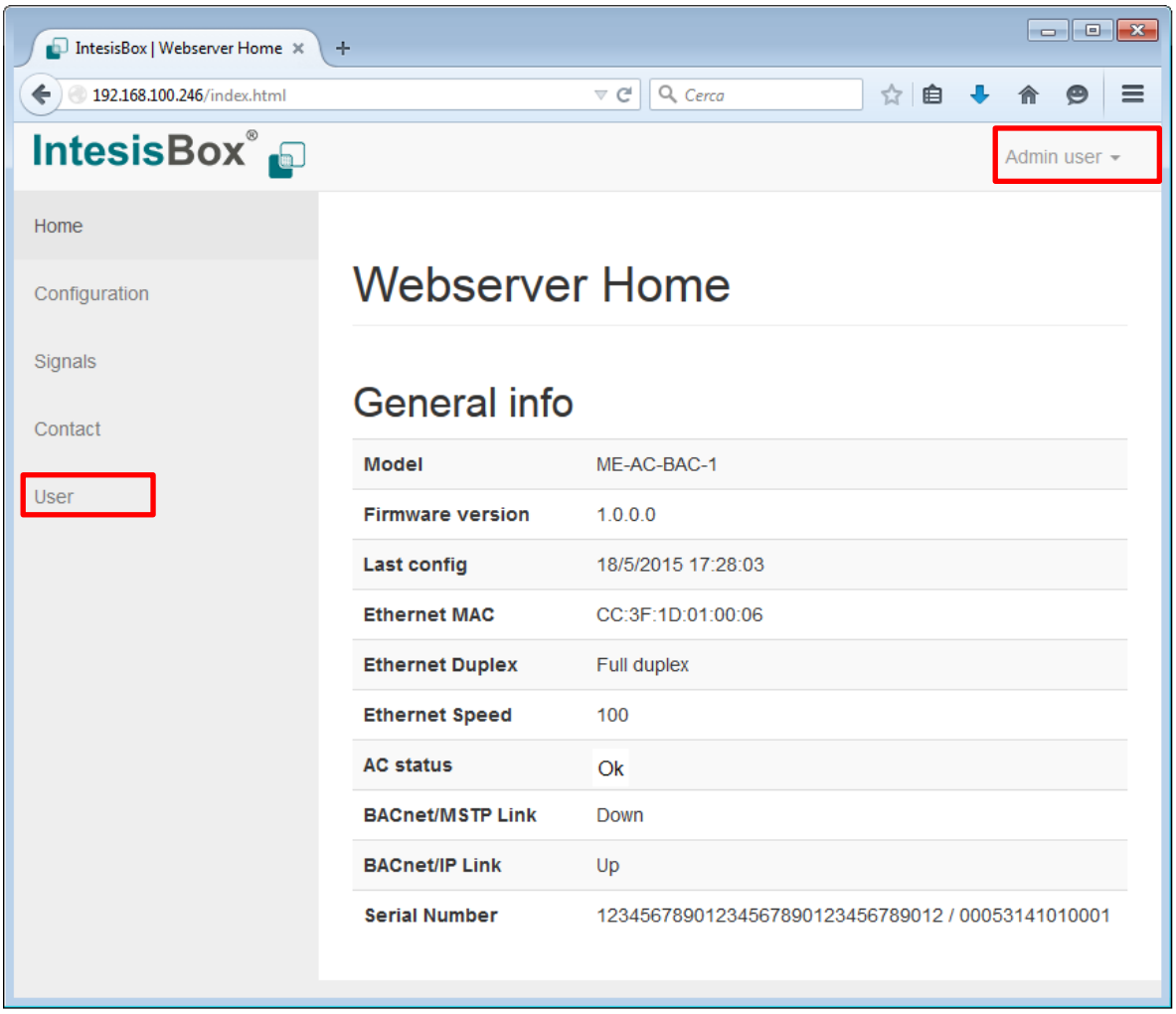

There are two access levels: ***admin*** and ***operator***. The default password value for each user is ***admin*** ➔ admin and ***operator*** ➔ operator.

Admin has total control on the device configuration and it can control the AC unit from the web app itself. On the contrary, operator can only read information from the current configuration and can operate the AC. Priority used when using the operator mode is always set to 8.

IMPORTANT: Once configuration is done, we recommend changing the passwords to ensure access control on the gateway.

© HMS Industrial Networks S.L.U - All rights reserved
This information is subject to change without notice

7.5.2 Configuration

On the configuration section, general **BACnet settings**, specific **BACnet MS/TP** and **BACnetIP settings**, **IP seetings** and **AC settings** can be configured. Each type of parameter is grouped in different blocks.

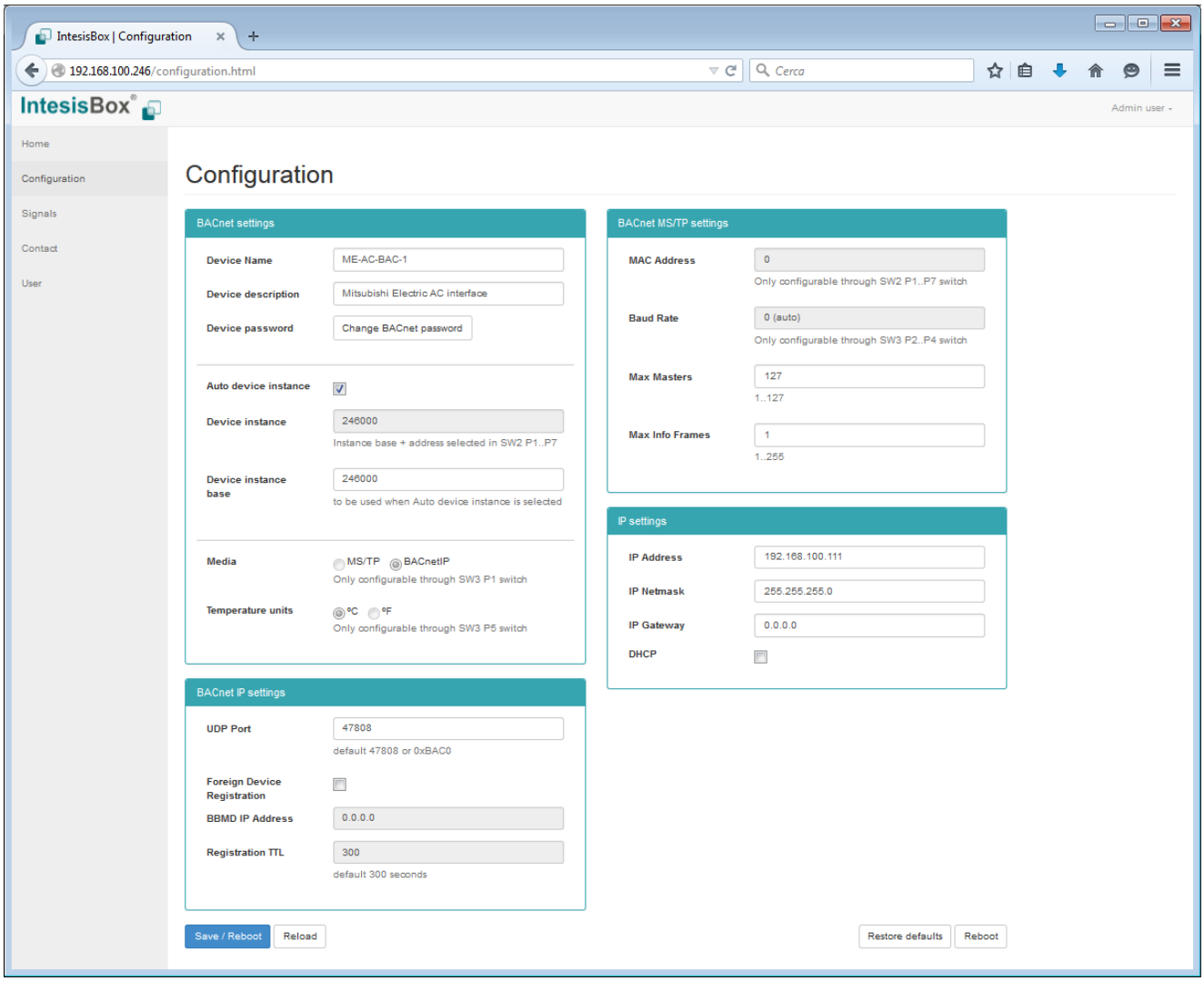

7.5.3 Signals

On this section a complete list of the available BACnet objects, their **type**, **Object Instance**, **priority** and current **value** is shown. Clinking on the "**Edit**" button, users will be able to command the system having feedback from both BACnet and AC system.

It also allows continuous monitoring of the current status of the variables. The refresh time for the AC information is shown using a progression bar in the top and the bottom of the signals list.

© HMS Industrial Networks S.L.U - All rights reserved
This information is subject to change without notice

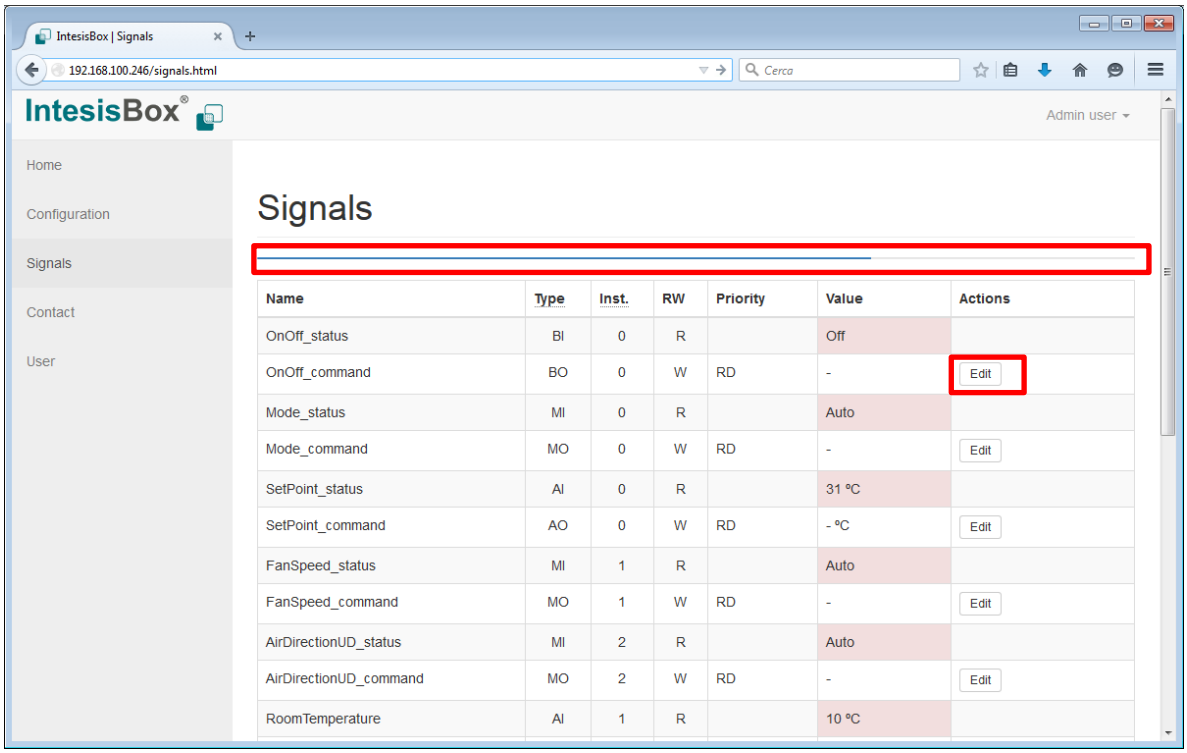

When you click on “Edit”, you will have the change of introducing a new **value** to be applied and also the **priority**.

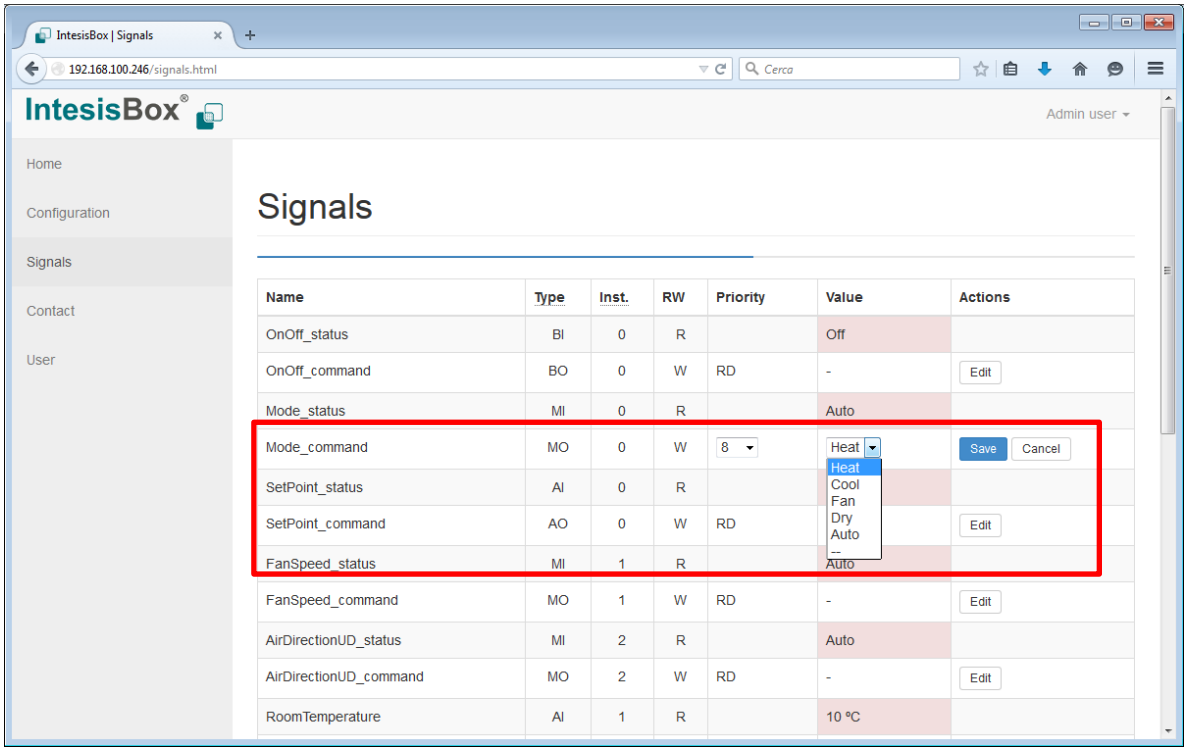

NOTE: If you want to relinquish the selected priority, please use the ‘--‘command.

© HMS Industrial Networks S.L.U - All rights reserved
This information is subject to change without notice

8 AC Unit Types compatibility

https://www.intesis.com/docs/compatibilities/inxxxmit001ix00_compatibility

© HMS Industrial Networks S.L.U - All rights reserved
This information is subject to change without notice

9 Mechanical & electrical characteristics

Enclosure	Plastic, type PC (UL 94 V-0). Dimensions: 93mm x 53mm x 58mm. Weight: 85 g
Color	Light Grey. RAL 7035.
Terminal wiring (for power supply and low-voltage signals)	Per terminal: solid wires or stranded wires (twisted or with ferrule) 1 core: 0.5 … 2.5mm^2 2 cores: 0.5 … 1.5mm^2 3 cores: not permitted
Console Port	Mini USB port for console usage
Mounting	Wall. DIN rail EN60715 TH35.
BACnet MS/TP port	1 x EIA485 Plug-in screw terminal block (2 poles + GND)
BACnet IP port	1 x Ethernet 100BT RJ45.
LED indicators	6 x Gateway/Communication status
Operational temperature	0°C to +40°C
Operational humidity	5% to 95%, non-condensing
Isolation Voltage	*4000 VDC (between AC unit and EIA-485)* *1000 VDC (between AC unit and USB)*
Protection	IP20 (IEC60529).
RoHS conformity	Compliant with RoHS directive (2002/95/CE).
Certifications	CE conformity to EMC directive (2004/108/EC) and Low-voltage directive (2006/95/EC) EN 61000-6-1 ;EN 61000-6-3; EN 60950-1; EN 50491-3 This device complies with part 15 of the FCC Rules. Operation is subject to the following two conditions: 1) This device may not cause harmful interference 2) This device must accept any interference received, including interference that may cause undesired operation.

10 Dimensions

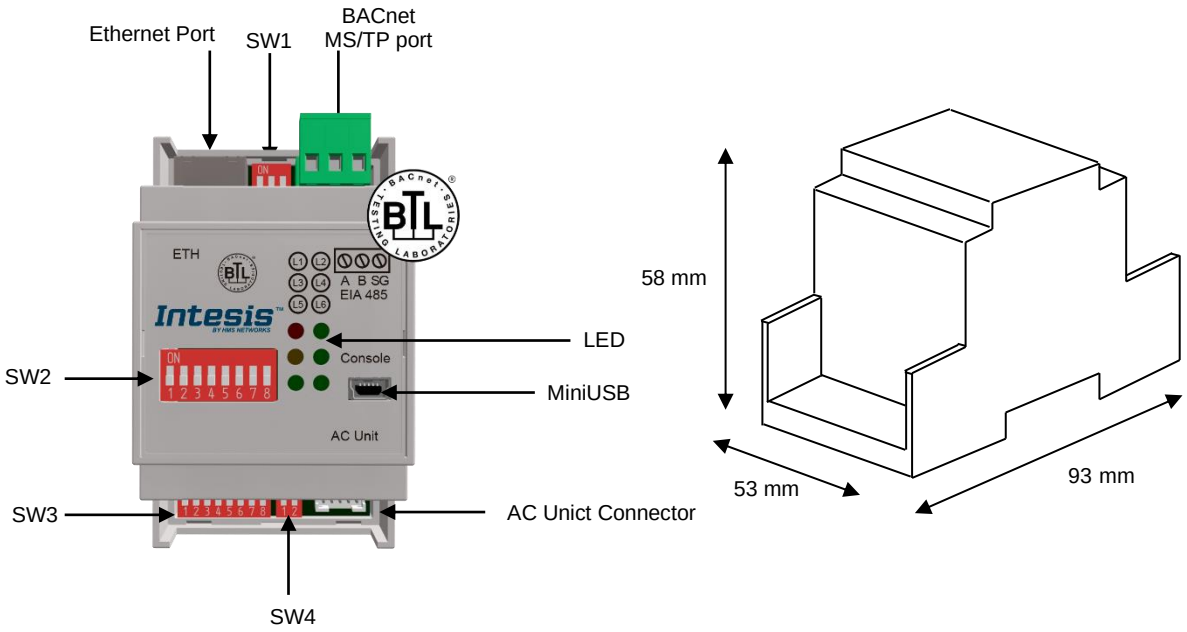

© HMS Industrial Networks S.L.U - All rights reserved
This information is subject to change without notice

11 Error codes

ErrorCode	Error CodeM	Error in RC	Description
-1	CommError	-	AC unit is offline
0	0	-	There is no error
N*	N	N	See the table below

** Positive integer*

ErrorCode	Error CodeM	Error in RC	Description
1102	1102	1102	Discharge Temperature high
1108	1108	1108	Internal thermostat detector working (49C)
1110	1110	1110	Outdoor unit fail
1300	1300	1300	Pressure low
1302	1302	1302	Pressure high (High pressure probe working 63H)
1503	1503	1503	Protection against freeze or battery high temperature
1504	1504	1504	Protection against freeze or battery high temperature
1504	1504	1504	Over heating protection
1509	1509	1509	High pressure error (ball valve closed)
1520	1520	1520	Super heating anomaly due to low temp. of discharge. (TH4)
2500	2500	2500	Erroneous operation of drain pump
2502	2502	2502	Erroneous operation of drain pump
2503	2503	2503	Drain sensor anomaly (DS)
4030	4030	4030	Serial transmission error
4100	4100	4100	Compressor pause due to excess of current (initial block)
4101	4101	4101	Compressor pause due to excess of current (overload)
4102	4102	4102	Phase detection opened
4103	4103	4103	Anti-phase detection
4108	4108	4108	Phase opened in phase L2 or connector 51CM opened
4118	4118	4118	Error in the anti-phase detector (electronic board)
4124	4124	4124	Connector 49L opened
4210	4210	4210	Cut due to over-current of compressor
4220	4220	4220	Voltage anomaly
4230	4230	4230	Radiator panel temperature anomaly (TH8)

© HMS Industrial Networks S.L.U - All rights reserved
This information is subject to change without notice

5101	5101	5101	Ambient temperature probe anomaly (TH1), indoor unit
5102	5102	5102	Liquid probe anomaly (TH2)
5103	5103	5103	Cond/Evap probe anomaly (TH5)
5104	5104	5104	Error detection in discharge temperature
5105	5105	5105	Outdoor probe error TH3
5106	5106	5106	Outdoor probe errorTH7
5107	5107	5107	Outdoor probe errorTH6
5110	5110	5110	Outdoor probe errorTH8
5202	5202	5202	Connector 63L opened
5300	5300	5300	Current probe error
6600	6600	6600	MNET duplicated address definition
6602	6602	6602	MNET Line transmission hardware error
6603	6603	6603	MNET BUS busy
6606	6606	6606	MNET Line transmission error
6607	6607	6607	MNET transmission error
6607	6607	6607	MNET without ack
6608	6608	6608	MNET transmission error
6608	6608	6608	MNET without response
6831	6831	6831	IR remote control transmission error (reception error)
6832	6832	6832	IR remote control transmission error (transmission error)
6840	6840	6840	Transmission error with the indoor/outdoor unit (reception error)
6841	6841	6841	Transmission error with the indoor/outdoor unit (transmission error)
6844	6844	6844	Error in inter-connection cable in the indoor/outdoor unit, indoor unit number deactivated (5 min or more)
6845	6845	6845	Error in inter-connection cable in the indoor/outdoor unit (cabling error, disconnection)
6846	6846	6846	Initial timer deactivated

In case you detect an error code not listed, contact your nearest Mitsubishi Electric technical support service for more information on the error meaning.

© HMS Industrial Networks S.L.U - All rights reserved
This information is subject to change without notice