BACnet MS/TP Server & BACnet IP Server

Panasonic Air Conditioning

Compatible with ECOi/PACi air conditioner lines commercialized by Panasonic

USER MANUAL

Issue date: 09/2024 v1.7 ENGLISH

14 rue Edouard Petit
42000 St-Etienne

Tel : +33 477 92 03 56
Email : contact@rg2i.com
www.rg2i.com

Important User Information

Disclaimer

The information in this document is for informational purposes only. Please inform HMS Industrial Networks of any inaccuracies or omissions found in this document. HMS Industrial Networks disclaims any responsibility or liability for any errors that may appear in this document.

HMS Industrial Networks reserves the right to modify its products in line with its policy of continuous product development. The information in this document shall therefore not be construed as a commitment on the part of HMS Industrial Networks and is subject to change without notice. HMS Industrial Networks makes no commitment to update or keep current the information in this document.

The data, examples and illustrations found in this document are included for illustrative purposes and are only intended to help improve understanding of the functionality and handling of the product. In view of the wide range of possible applications of the product, and because of the many variables and requirements associated with any particular implementation, HMS Industrial Networks cannot assume responsibility or liability for actual use based on the data, examples or illustrations included in this document nor for any damages incurred during installation of the product. Those responsible for the use of the product must acquire sufficient knowledge in order to ensure that the product is used correctly in their specific application and that the application meets all performance and safety requirements including any applicable laws, regulations, codes and standards. Further, HMS Industrial Networks will under no circumstances assume liability or responsibility for any problems that may arise as a result from the use of undocumented features or functional side effects found outside the documented scope of the product. The effects caused by any direct or indirect use of such aspects of the product are undefined and may include e.g. compatibility issues and stability issues.

© HMS Industrial Networks S.L.U - All rights reserved
This information is subject to change without notice

Gateway for the integration of Panasonic air conditioning units in BACnet enabled monitoring and control systems.

Compatible with ECOi/PACi air conditioner lines commercialized by Panasonic.

ORDER CODE	LEGACY ORDER CODE
INBACPAN001R000	PA-RC2-BAC-1

© HMS Industrial Networks S.L.U - All rights reserved
This information is subject to change without notice

INDEX

1 Description 6
1.1 Introduction 6
1.2 Functionality 7
1.3 Capacity of Intesis 7
1.4 Quick Setup 7
2 Protocol Implementation Conformance Statement 8
2.1 BACnet Standardized Device Profile (Annex L): 8
2.2 Segmentation Capability: 8
2.3 Data Link Layer Options: 8
2.4 Device Address Binding: 9
2.5 Networking Options: 9
2.6 Character Sets Supported 9
2.7 Gateway 9
3 BACnet Interoperability Building Blocks Supported (BIBBs) 10
3.1 Data Sharing BIBBs 10
3.2 Alarm and Event Management BIBBs 10
3.3 Scheduling BIBBs 11
3.4 Trending BIBBs 11
3.5 Network Management BIBBs 11
3.6 Device Management BIBBs 12
4 Service Types 13
5 Objects 14
5.1 Supported Object Types 14
5.2 Member objects 15
5.2.1 Type: Gateway 15
5.2.2 Type: Indoor Unit 15
5.3 Objects and properties 16
5.3.1 Panasonic AC Gateway (Device Object Type) 16
5.3.2 OnOff_status (Binary Input Object Type) 18
5.3.3 OnOff_command (Binary Output Object Type) 19
5.3.4 Mode_status (Multistate Input Object Type) 20
5.3.5 Mode_command (Multistate Output Object Type) 21
5.3.6 Setpoint_status (Analog Input Object Type) 22
5.3.7 Setpoint_command (Analog Output Object Type) 23
5.3.8 FanSpeed_status (Multistate Input Object Type) 24
5.3.9 FanSpeed_command (Multistate Output Object Type) 25
5.3.10 AirDirectionUD_status (Multistate Input Object Type) 26
5.3.11 AirDirectionUD_command (Multistate Output Object Type) 27

© HMS Industrial Networks S.L.U - All rights reserved
This information is subject to change without notice

5.3.12 RoomTemperature_status (Analog Input Object Type) ... 28
5.3.13 RoomTemperature_command (Analog Output Object Type) ... 29
5.3.14 ErrorCode (Analog Input Object Type) ... 30
5.3.15 ErrorCodeM (Multistate Input Object Type) ... 31
5.3.16 ErrorActive (Binary Input Object Type) ... 33
5.3.17 OnTimeCounter (Analog Value Object Type) ... 34
5.3.18 FilterSign (Binary Input Object Type) ... 35
5.3.19 FilterReset (Binary Output Object Type) ... 36
5.3.20 Occupancy (Multistate Value Object Type) ... 37
5.3.21 OccupiedCoolSetPoint (Analog Value Object Type) ... 38
5.3.22 OccupiedHeatSetPoint (Analog Value Object Type) ... 39
5.3.23 UnoccupiedCoolSetPoint (Analog Value Object Type) ... 40
5.3.24 UnoccupiedHeatSetPoint (Analog Value Object Type) ... 41
5.3.25 OccupancyContinuousCheck (Binary Value Object Type) ... 42
5.3.26 UnoccupiedDeadbandAction (Binary Value Object Type) ... 43
5.3.27 RemoteControllerProhibit_status (Multistate Input Object Type) ... 44
5.3.28 RemoteControllerProhibit_command (Multistate Output Object Type) ... 45
5.3.29 RuntimeModeRestriction (Multistate Input Object Type) ... 46
6 Connections and switches ... 47
6.1 Connect to the Remote Controller bus ... 47
6.2 Connect to BACnet MS/TP ... 48
6.2.1 MS/TP MAC address switch configuration ... 48
6.2.2 MS/TP activation and baudrate ... 49
6.3 Connect to BACnet IP ... 49
6.3.1 BACnet Device Instance ... 49
7 Set-up process and troubleshooting ... 50
7.1 Pre-requisites ... 50
7.2 Physical checking ... 50
7.3 LED status ... 50
7.4 Occupancy ... 51
7.5 Configuration tool ... 52
7.5.1 Home ... 52
7.5.2 Configuration ... 53
7.5.3 Signals ... 53
8 AC Unit Types compatibility ... 54
9 Mechanical & electrical characteristics ... 54
10 Dimensions ... 55
11 Error codes ... 56

© HMS Industrial Networks S.L.U - All rights reserved
This information is subject to change without notice

1 Description

1.1 *Introduction*

This document describes the integration of Panasonic air conditioning systems into BACnet compatible devices and systems using the *INBACPAN001R000* gateway.

The aim of this integration is to monitor and control your Panasonic air conditioning system, remotely, from your Control Center using any commercial SCADA or monitoring software that includes a BACnet driver or connect it to other BACnet devices to do any automation. To do it so, Intesis allows BACnet communication allowing polling or subscription requests (COV).

Intesis makes available the Panasonic air conditioning system indoor units through independent BACnet objects.

Abstraction of Panasonic air conditioning system properties and functionalities as fixed BACnet Objects. Intesis allows fixed BACnet object IDs mapping. Simple configuration is needed: just select the appropriate communication parameters (MAC address, baud rate…).

This document assumes that the user is familiar with BACnet and Panasonic technologies and their technical terms.

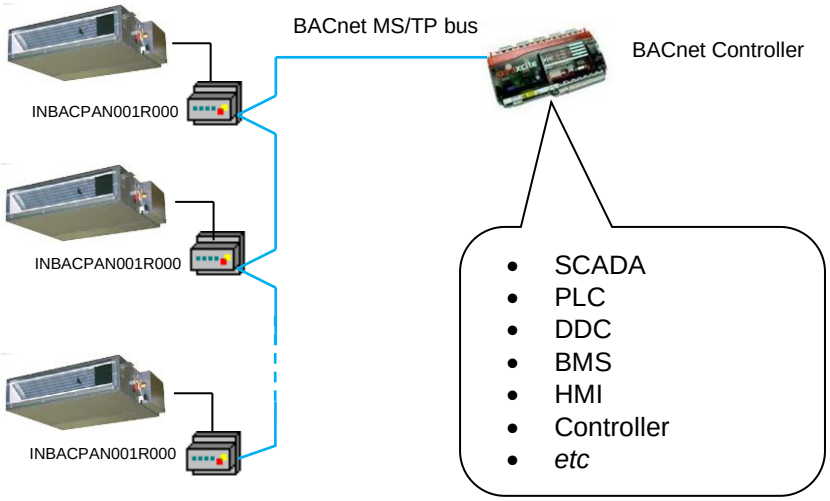

BACnet MS/TP installation sketch

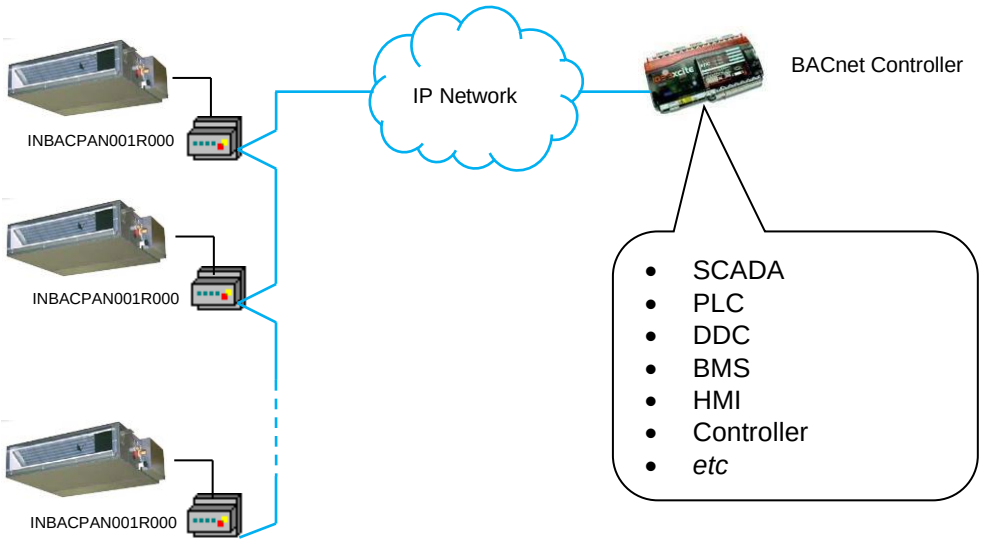

BACnet IP installation sketch

© HMS Industrial Networks S.L.U - All rights reserved
This information is subject to change without notice

1.2 *Functionality*

Intesis continuously reads the Panasonic AC system and keeps the updated status of all objects in its memory, ready to be served when requested from the BACnet side.

The role of Intesis consists in associate the elements of the Panasonic AC system with BACnet objects.

The control of the indoor units through the INBACPAN001R000 is permitted, so commands towards the Panasonic AC units are permitted too.

The indoor unit is offered in a set of BACnet objects and extra functionalities.

1.3 *Capacity of Intesis*

Intesis is capable of integrating one or more Panasonic AC units and its associated elements.

Element	Max.	Notes
Number of indoor units	1*	Number of indoor units that can be controlled through Intesis
Number of Objects	29	Number of Panasonic AC signals available as objects into Intesis.

* **NOTE**: Keep in mind that more than one unit can be connected to the same INBACPAN001R000 gateway. You can control then more than one AC unit, but it will be actuated as a single unit. Different commands to different AC units connected to the same INBACPAN001R000 will not be allowed.

1.4 *Quick Setup*

1. Install Intesis in the desired installation site (DIN rail mounting inside a metallic industrial cabinet connected to ground is recommended).
2. Connect the communication cables. Details in section 0.
3. Connect to the Intesis. Details in section 7.5.
4. (Optional) Configure the Intesis using the configuration tool. Details in section 7.5.2.
5. Check the BACnet objects list for its integration to your BACnet project. Details in section 5.2.
6. Check if there is communication between BACnet and AC system. Details in section 7.5.3.
7. The Intesis is ready to be used in your system.

© HMS Industrial Networks S.L.U - All rights reserved
This information is subject to change without notice

2 Protocol Implementation Conformance Statement

BACnet Protocol Implementation Conformance Statement (PICS)

Date: *2014-12-05*
Vendor Name: *HMS Industrial Networks S.L.U*
Product Name: *INBACPAN001R000*
Product Model Number: *INBACPAN001R000*
Application Software Version: *1.0*
Firmware Revision: *1.0.0.0*
BACnet Protocol Revision: *12*

Product Description:

Panasonic air conditioning system – BACnet MS/TP & BACnet IP Gateway

Abstraction of Panasonic air conditioning system properties and functionalities as BACnet Objects.

2.1 *BACnet Standardized Device Profile (Annex L):*

☐ BACnet Operator Workstation (B-OWS)

☐ BACnet Building Controller (B-BC)

☐ BACnet Advanced Application Controller (B-AAC)

☒ BACnet Application Specific Controller (B-ASC)

☐ BACnet Smart Sensor (B-SS)

☐ BACnet Smart Actuator (B-SA)

Additional BACnet Interoperability Building Blocks Supported (Annex K):
Reference of BIBBs List

2.2 *Segmentation Capability:*

Segmented request supported	☐ No	☒ Yes	Window Size *16*
Segmented responses supported	☐ No	☒ Yes	Window Size *16*

2.3 *Data Link Layer Options:*

☒ BACnet IP, (Annex J)
☐ BACnet IP, (Annex J), Foreign Device
☐ ISO 8802-3, Ethernet (Clause 7)
☐ ANSI/ATA 878.1, 2.5 Mb. ARCNET (Clause 8)
☐ ANSI/ATA 878.1, RS-485 ARCNET (Clause 8), baud rate(s) ____
☒ MS/TP master (Clause 9), baud rate(s): 9600, 19200, 38400, 76800
☐ MS/TP slave (Clause 9), baud rate(s):
☐ Point-To-Point, EIA 232 (Clause 10), baud rate(s):
☐ Point-To-Point, modem, (Clause 10), baud rate(s):
☐ LonTalk, (Clause 11), medium: _____
☐ Other:

© HMS Industrial Networks S.L.U - All rights reserved
This information is subject to change without notice

2.4 *Device Address Binding:*

Is static device binding supported? (This is currently necessary for two-way communication with MS/TP slaves and certain other devices.) ☐ Yes ☒ No

2.5 *Networking Options:*

☐ Router, Clause 6 - List all routing configurations, e.g., ARCNET-Ethernet, Ethernet-MS/TP, etc.
☐ Annex H, BACnet Tunneling Router over IP
☐ BACnet/IP Broadcast Management Device (BBMD)
Does the BBMD support registrations by Foreign Devices? ☐ Yes ☐ No

2.6 *Character Sets Supported*

Indicating support for multiple character sets does not imply that they can all be supported simultaneously.

☒ ANSI X3.4
☐ IBM™/Microsoft™ DBCS
☐ JIS C 6226
☐ ISO 10646 (UCS-4)
☐ ISO 10646 (UCS-2)
☐ ISO 8859-1

2.7 *Gateway*

If this product is a communication gateway, describe the types of non-BACnet equipment/network(s) that the gateway supports:

Panasonic Air Conditioning Units compatible with ECOi/PACi air conditioner lines.

© HMS Industrial Networks S.L.U - All rights reserved
This information is subject to change without notice

3 BACnet Interoperability Building Blocks Supported (BIBBs)

3.1 *Data Sharing BIBBs*

BIBB Type		Active	BACnet Service	Initiate	Execute
DS-RP-A	Data Sharing-ReadProperty–A	☐	ReadProperty	☒	☐
DS-RP-B	Data Sharing-ReadProperty–B	☒	ReadProperty	☐	☒
DS-RPM-A	Data Sharing-ReadPropertyMultiple–A	☐	ReadPropertyMultiple	☒	☐
DS-RPM-B	Data Sharing-ReadPropertyMultiple–B	☒	ReadPropertyMultiple	☐	☒
DS-RPC-A	Data Sharing-ReadPropertyConditiona–A	☐	ReadPropertyConditional	☒	☐
DS-RPC-B	Data Sharing-ReadPropertyConditional–B	☐	ReadPropertyConditional	☐	☒
DS-WP-A	Data Sharing-WriteProperty–A	☐	WriteProperty	☒	☐
DS-WP-B	Data Sharing-WriteProperty–B	☒	WriteProperty	☐	☒
DS-WPM-A	Data Sharing-WritePropertyMultiple–A	☐	WritePropertyMultiple	☒	☐
DS-WPM-B	Data Sharing-WritePropertyMultiple–B	☒	WritePropertyMultiple	☐	☒
DS-COV-A	Data Sharing-COV–A	☐	SubscribeCOV	☒	☐
		☐	ConfirmedCOVNotification	☐	☒
		☐	UnconfirmedCOVNotification	☐	☒
DS-COV-B	Data Sharing-COV–B	☒	SubscribeCOV	☐	☒
		☒	ConfirmedCOVNotification	☒	☐
		☒	UnconfirmedCOVNotification	☒	☐
DS-COVP-A	Data Sharing-COVP–A	☐	SubscribeCOV	☒	☐
		☐	ConfirmedCOVNotification	☐	☒
		☐	UnconfirmedCOVNotification	☐	☒
DS-COVP-B	Data Sharing-COVP–B	☐	SubscribeCOV	☐	☒
		☐	ConfirmedCOVNotification	☒	☐
		☐	UnconfirmedCOVNotification	☒	☐
DS-COVU-A	Data Sharing-COV-Unsolicited–A	☐	UncofirmedCOVNotification	☐	☒
DS-COVU-B	Data Sharing-COV-Unsolicited-B	☐	UncofirmedCOVNotification	☒	☐

3.2 *Alarm and Event Management BIBBs*

BIBB Type		Active	BACnet Service	Initiate	Execute
AE-N-A	Alarm and Event-Notification–A	☐	ConfirmedEventNotification	☐	☒
		☐	UnconfirmedEventNotification	☐	☒
AE-N-I-B	Alarm and Event-Notification Internal–B	☐	ConfirmedEventNotification	☒	☐
		☐	UnconfirmedEventNotification	☒	☐
AE-N-E-B	Alarm and Event-Notification External–B	☐	ConfirmedEventNotification	☒	☐
		☐	UnconfirmedEventNotification	☒	☐
AE-ACK-A	Alarm and Event-ACK–A	☐	AcknowledgeAlarm	☒	☐
AE-ACK-B	Alarm and Event-ACK–B	☐	AcknowledgeAlarm	☐	☒
AE-ASUM-A	Alarm and Event-Summary–A	☐	GetAlarmSummary	☒	☐
AE-ASUM-B	Alarm and Event-Summary–B	☐	GetAlarmSummary	☐	☒
AE-ESUM-A	Event-Summary–A	☐	GetEnrollmentSummary	☒	☐
AE-ESUM-B	Event-Summary–B	☐	GetEnrollmentSummary	☐	☒
AE-INFO-A	Alarm and Event-Information–A	☐	GetEventInformation	☒	☐
AE-INFO-B	Alarm and Event-Information–B	☐	GetEventInformation	☐	☒
AE-LS-A	Alarm and Event-LifeSafety–A	☐	LifeSafetyOperation	☒	☐
AE-LS-B	Alarm and Event-LifeSafety–B	☐	LifeSafetyOperation	☐	☒

© HMS Industrial Networks S.L.U - All rights reserved
This information is subject to change without notice

3.3 *Scheduling BIBBs*

BIBB Type		Active	BACnet Service	Initiate	Execute
SCHED-A	Scheduling–A *(must support DS-RP-A and DS-WP-A)*	☐			
		☐			
SCHED-I-B	Scheduling-Internal–B *(shall support DS-RP-B and DS-WP-B)* *(shall also support ether DM-TS-B or DS-UTC-B)*	☐			
		☐			
SCHED-E-B	Scheduling-External–B *(shall support SCHED-I-B and DS-WP-A)*	☐			
		☐			
T-VMT-A	Trending - Viewing and Modifying Trends–A	☐	ReadRange	☐	☒
T-VMT-I-B	Trending - Viewing and Modifying Trends Inernal–B	☐	ReadRange	☐	☒
T-VMT-E-B	Trending - Viewing and Modifying Trends External–B	☐	ReadRange	☐	☒
T-ATR-A	Trending - Automated Trend Retrieval–A	☐	ConfirmedEventNotification	☐	☒
		☐	ReadRange	☒	☐
T-ATR-B	Trending - Automated Trend Retrieval–B	☐	ConfirmedEventNotification	☒	☐
		☐	ReadRange	☐	☒

3.4 *Trending BIBBs*

BIBB Type		Active	BACnet Service	Initiate	Execute
T-VMT-A	Trending - Viewing and Modifying Trends–A	☐	ReadRange	☒	☐
T-VMT-I-B	Trending - Viewing and Modifying Trends Inernal–B	☐	ReadRange	☐	☒
T-VMT-E-B	Trending - Viewing and Modifying Trends External–B	☐	ReadRange	☐	☒
T-ATR-A	Trending - Automated Trend Retrieval–A	☐	ConfirmedEventNotification	☐	☒
		☐	ReadRange	☒	☐
T-ATR-B	Trending - Automated Trend Retrieval–B	☐	ConfirmedEventNotification	☒	☐
		☐	ReadRange	☐	☒

3.5 *Network Management BIBBs*

BIBB Type		Active	BACnet Service	Initiate	Execute
NM-CE-A	Network Management - Connection Establishment–A	☐	Establish-Connection-To-Network	☒	☐
		☐	Disconnect-Connection-To-Network	☒	☐
NM-CE-B	Network Management - Connection Establishment– B	☐	Establish-Connection-To-Network	☐	☒
		☐	Disconnect-Connection-To-Network	☐	☒
NM-RC-A	Network Management - Router Configuration–A	☐	Who-Is-Router-To-Network	☒	☐
		☐	I-Am-Router-To-Network	☐	☒
		☐	I-Could-Be-Router-To-Network	☐	☒
		☐	Initialize-Routing-Table	☒	☐
		☐	Initialize-Routing-Table-Ack	☐	☒
NM-RC-B	Network Management - Router Configuration–B	☐	Who-Is-Router-To-Network	☒	☒
		☐	I-Am-Router-To-Network	☒	☒
		☐	Initialize-Routing-Table	☐	☒
		☐	Initialize-Routing-Table-Ack	☒	☐

© HMS Industrial Networks S.L.U - All rights reserved
This information is subject to change without notice

3.6 *Device Management BIBBs*

BIBB Type		Active	BACnet Service	Initiate	Execute
DM-DDB-A	Device Management - Dynamic Device Binding–A	☐	Who-Is	☒	☐
		☐	I-Am	☐	☒
DM-DDB-B	Device Management - Dynamic Device Binding–B	☒	Who-Is	☐	☒
		☒	I-Am	☒	☐
DM-DOB-A	Device Management - Dynamic Object Binding–A	☐	Who-Has	☒	☐
		☐	I-Have	☐	☒
DM-DOB-B	Device Management - Dynamic Object Binding–B	☒	Who-Has	☐	☒
		☒	I-Have	☒	☐
DM-DCC-A	Device Management - DeviceCommunicationControl–A	☐	DeviceCommunicationControl	☒	☐
DM-DCC-B	Device Management - DeviceCommunicationControl–B	☒	DeviceCommunicationControl	☐	☒
DM-PT-A	Device Management - PrivateTransfer–A	☐	ConfirmedPrivateTransfer	☒	☐
		☐	UnconfirmedPrivateTransfer	☒	☐
DM-PT-B	Device Management - PrivateTransfer–B	☐	ConfirmedPrivateTransfer	☐	☒
		☐	UnconfirmedPrivateTransfer	☐	☒
DM-TM-A	Device Management - Text Message–A	☐	ConfirmedTextMessage	☒	☐
		☐	UnconfirmedTextMessage	☒	☐
DM-TM-B	Device Management - Text Message–B	☐	ConfirmedTextMessage	☐	☒
		☐	UnconfirmedTextMessage	☐	☒
DM-TS-A	Device Management - TimeSynchronization–A	☐	TimeSynchronization	☒	☐
DM-TS-B	Device Management - TimeSynchronization–B	☐	TimeSynchronization	☐	☒
DM-UTC-A	Device Management - UTCTimeSynchronization–A	☐	UTCTimeSynchronization	☒	☐
DM-UTC-B	Device Management - UTCTimeSynchronization–B	☐	UTCTimeSynchronization	☐	☒
DM-RD-A	Device Management - ReinitializeDevice–A	☐	ReinitializeDevice	☒	☐
DM-RD-B	Device Management - ReinitializeDevice–B	☒	ReinitializeDevice	☐	☒
DM-BR-A	Device Management - Backup and Restore–A	☐	AtomicReadFile	☒	☐
		☐	AtomicWriteFile	☒	☐
		☐	CreateObject	☒	☐
		☐	ReinitializeDevice	☒	☐
DM-BR-B	Device Management - Backup and Restore–B	☐	AtomicReadFile	☐	☒
		☐	AtomicWriteFile	☐	☒
		☐	ReinitializeDevice	☐	☒
DM-R-A	Device Management - Restart–A	☐	UnconfimedCOVNotification	☐	☒
DM-R-B	Device Management - Restart–B	☐	UnconfimedCOVNotification	☒	☐
DM-LM-A	Device Management - List Manipulation–A	☐	AddListElement	☒	☐
		☐	RemoveListElement	☒	☐
DM-LM-B	Device Management - List Manipulation–B	☐	AddListElement	☐	☒
		☐	RemoveListElement	☐	☒
DM-OCD-A	Device Management - Object Creation and Deletion–A	☐	CreateObject	☒	☐
		☐	DeleteObject	☒	☐
DM-OCD-B	Device Management - Object Creation and Deletion–B	☐	CreateObject	☐	☒
		☐	DeleteObject	☐	☒
DM-VT-A	Device Management - Virtual Terminal–A	☐	VT-Open	☒	☐
		☐	VT-Close	☒	☒
		☐	VT-Data	☒	☒
DM-VT-B	Device Management - Virtual Terminal–B	☐	VT-Open	☐	☒
		☐	VT-Close	☒	☒
		☐	VT-Data	☒	☒

© HMS Industrial Networks S.L.U - All rights reserved
This information is subject to change without notice

4 Service Types

Service type	Service name	Supported	Remarks
Alarm and Event Services	AcknowledgeAlarm	☐	
	ConfirmedCOVNotification	☐	
	ConfirmedEventNotification	☐	
	GetAlarmSummary	☐	
	GetEnrollmentSummary	☐	
	SubscribeCOV	☒	
File Access Services	AtomicReadFile	☐	
	AtomicWriteFile	☐	
Object Access Services	AddListElement	☐	
	RemoveListElement	☐	
	CreateObject	☐	
	DeleteObject	☐	
	ReadProperty	☒	
	ReadPropertyConditional	☐	
	ReadPropertyMultiple	☒	
	ReadRange	☐	
	WriteProperty	☒	
	WritePropertyMultiple	☒	
Remote Device Management Services	DeviceComminicationControl	☐	
	ConfirmedPrivateTransfer	☐	
	ConfirmedTextMessage	☐	
	ReinitializeDevice	☒	
Virtual Terminal Services	VtOpen	☐	
	VtClose	☐	
	VtData	☐	
Security Services	Authenticate	☐	
	RequestKey	☐	
Unconfirmed Services	I-Am	☒	
	I-Have	☒	
	UnconfirmedCOVNotification	☐	
	UnconfirmedEventNotification	☐	
	UnconfirmedPrivateTransfer	☐	
	UnconfirmedTextMessage	☐	
	TimeSynchronization	☐	
	UtcTimeSynchronization	☐	
	Who-Has	☒	
	Who-Is	☒	
	LifeSafetyOperation	☐	
	SubscribeCOVProperty	☒	
	GetEventInformation	☐	

© HMS Industrial Networks S.L.U - All rights reserved
This information is subject to change without notice

5 Objects

5.1 *Supported Object Types*

The objects supported are shown in the table below.

Object Type	ID	Supported	Management Point
Analog-Input	0	☒	SetPoint_status RoomTemperature ErrorCode ErrorAddress
Analog-Output	1	☒	SetPoint_command
Analog-Value	2	☒	OnTimeCounter OccupiedCoolSetPoint OccupiedHeatSetPoint UnoccupiedCoolSetPoint UnoccupiedHeatSetPoint
Averaging	18	☐	
Binary-Input	3	☒	OnOff_status ErrorActive FIlterSign
Binary-Output	4	☒	OnOff_command FilterReset
Binary-Value	5	☒	OccupancyContinousCheck UnnoccupiedDeadBandAction
Calendar	6	☐	
Command	7	☐	
Device	8	☒	INBACPAN001R000
Event-Enrollment	9	☐	
File	10	☐	
Group	11	☐	
Life-Safety-Point	21	☐	
Life-Safety-Zone	22	☐	
Loop	12	☐	
Multistate-Input	13	☒	Mode_status FanSpeed_status AirDirectionUD_status ErrorCodeM RemoteControllerProhibit_status RuntimeModeRestriction
Multistate-Output	14	☒	Mode_command FanSpeed_command AirDirectionUD_command RemoteControllerProhibit_command
Multistate-Value	19	☒	Occupancy
Notification-Class	15	☐	
Program	16	☐	
Schedule	17	☐	
Trend-Log	20	☐	

© HMS Industrial Networks S.L.U - All rights reserved
This information is subject to change without notice

5.2 *Member objects*

5.2.1 Type: Gateway

Object-name	Description	Object-type	Object-instance
INBACPAN001R000	Panasonic AC Interface	Device	246000*

5.2.2 Type: Indoor Unit

Object-name	Description	Object-type	Object-instance
OnOff_status		BI	0
OnOff_command		BO	0
Mode_status		MI	0
Mode_command		MO	0
SetPoint_status		AI	0
SetPoint_command		AO	0
FanSpeed_status		MI	1
FanSpeed_command		MO	1
AirDirectionUD_status		MI	2
AirDirectionUD_command		MO	2
RoomTemperature_status		AI	1
RoomTemperature_command		AO	1
ErrorCode		AI	2
ErrorCodeM		MI	4
ErrorActive		BI	1
OnTimeCounter		AV	0
FilterSign		BI	6
FilterReset		BO	4
Occupancy		MV	0
OccupiedCoolSetPoint		AV	1
OccupiedHeatSetPoint		AV	2
UnoccupiedCoolSetPoint		AV	3
UnoccupiedHeatSetPoint		AV	4
OccupancyContinuousCheck		BV	0
UnoccupiedDeadbandAction		BV	1
RemoteControlProhibit_status		MI	6
RemoteControlProhibit_command		MO	5
RuntimeModeRestriction		MI	7

* This is the default value. Check section 5.3 (below) for more information.

© HMS Industrial Networks S.L.U - All rights reserved
This information is subject to change without notice

5.3 *Objects and properties*

Below you can find relevant information for the objects and properties.

Object_Identifier: In the **Device Object**, is configurable writing directly on the property. either from BACnet or through our configuration tools and can be set automatically or manually. When set automatically, it is set using a base address and the address selected in SW2 P1..P7. The base address can be selected using the configuration tool. When set manually, the address is directly the one configured on the configuration tool. See section 7.4 for more information

Object_Name: In the **Device Object**, is configurable writing directly on this property. This can be done using the configuration tools too. See section 7.4 for more information.

Description: In the **Device Object**, is configurable writing directly on the property, length maximum 63 chars. This string is configurable using the configuration tool. See section 7.4 for more information.

5.3.1 Panasonic AC Gateway (Device Object Type)

Property Identifier	Property Datatype	Value	ASHRAE	IBOX
Object_Identifier	BACnetObjectIdentifier	(Device, 246000)	R	R
Object_Name	CharacterString	" INBACPAN001R000 "	R	R
Object_Type	BACnetObjectType	DEVICE (8) (Device Object Type)	R	R
System_Status	BACnetDeviceStatus	OPERATIONAL (0)	R	R
Vendor_Name	CharacterString	"HMS Industrial Networks S.L.U "	R	R
Vendor_Identifier	Unsigned16	246	R	R
Model_Name	CharacterString	"INBACPAN001R000 "	R	R
Firmware_Revision	CharacterString	"1.0.0.0"	R	R
Application_Software_ Version	CharacterString	"1.0.0.0"	R	R
Location	CharacterString	""	O	-
Description	CharacterString	"Panasonic RC2 interface"	O	R
Protocol_Version	Unsigned	1	R	R
Protocol_Revision	Unsigned	12	R	R
Protocol_Services_ Supported	BACnetServiceSupported	Refer to section 4 [Service Types]	R	R
Protocol_Object_Types_ Supported	BACnetObjectTypes Supported	Refer to section 5.1 [Object Types]	R	R
Object_List	BACnetArray[N] of BACnetObjectIdentifier	BACnetARRAY[N]	R	R
Structured_Object_List	BACnetArray[N] of BACnetObjectIdentifier	-	O	-
Max_APDU_Length_ Accepted	Unsigned	480 when MSTP / 1476 when BACnet/IP	R	R
Segmentation_Supported	BACnetSegmentation	SEGMENTED-BOTH (0)	R	R
Max_Segments_accepted	Unsigned	16	O	R
VT_Classes_Supported	List of BACnetVTClass	-	O	-
Active_VT_Sessions	List of BACnetVTSession	-	O	-

© HMS Industrial Networks S.L.U - All rights reserved
This information is subject to change without notice

Local_Date	Date	-	O	-
Local_Time	Time	-	O	-
UTC_Offset	INTEGER	-	O	-
Daylight_Savings_Status	BOOLEAN	-	O	-
APDU_Segment_Timeout	Unsigned	3000	R	R
APDU_Timeout	Unsigned	3000	R	R
Number_of_APDU_ Retries	Unsigned	3	R	R
List_Of_Session_Keys	List of BACnetSessionKey	-	O	-
Time_Synchronization_ Recipients	List of BACnetRecipient	-	O	-
Max_Master * **	Unsigned	127	R	W
Max_Info_Frames *	Unsigned	1	O	R
Device_Address_Binding	List of BACnetAddressBinding	NULL (empty)	R	R
Database_Revision	Unsigned	0	R	R
Configuration_Files	BACnetArray[N] of BACnetObjectIdentifier	-	O	-
Last_Restore_Time	BACnetTimeStamp	-	O	-
Backup_Failure_Timeout	Unsigned16	-	O	-
Active_COV_ Subscriptions	List of BACnetCOVSubscription	List of BACnetCOVSubscription	O	R
Slave_Proxy_Enable	BACnetArray[N] of BOOLEAN	-	O	-
Manual_Slave_Address_ Binding	List of BACnetAddressBinding	-	O	-
Auto_Slave_Discovery	BACnetArray[N] of BOOLEAN	-	O	-
Slave_Address_Binding	BACnetAddressBinding	-	O	-
Last_Restart_Reason	BACnetRestartReason	-	O	-
Time_Of_Device_Restart	BACnetTimeStamp	-	O	-
Restart_Notification_ Recipients	List of BACnetRecipient	-	O	-
UTC_Time_ Synchronization_ Recipients	List of BACnetRecipient	-	O	-
Time_Synchronization_ Interval	Unsigned	-	O	-
Align_Intervals	BOOLEAN	-	O	-
Interval_Offset	Unsigned	-	O	-
Profile_Name	CharacterString	-	O	-

* Only available when MSTP is used

** Configurable through the configuration tool. See section 7.4 for more information.

© HMS Industrial Networks S.L.U - All rights reserved
This information is subject to change without notice

5.3.2 OnOff_status (Binary Input Object Type)

It indicates if the indoor unit is in On or Off status.

Property Identifier	Property Datatype	Value	ASHRAE	IBOX
Object_Identifier	BACnetObjectIdentifier	(Binary Input, 0)	R	R
Object_Name	CharacterString	“OnOff_status”	R	R
Object_Type	BACnetObjectType	BINARY_INPUT (3)	R	R
Present_Value	BACnetBinaryPV	INACTIVE (0) / ACTIVE (1)	R	R
Description	CharacterString	-	O	-
Device_Type	CharacterString	-	O	-
Status_Flags	BACnetStatusFlags	{FALSE, FALSE/TRUE, FALSE, FALSE}	R	R
Event_State	BACnetEventState	STATE_NORMAL (0)	R	R
Reliability	BACnetReliability	NO_FAULT_DETECTED (0), UNRELIABLE_OTHER (7)	O	R
Out_Of_Service	BOOLEAN	FALSE	R	R
Polarity	BACnetPolarity	NORMAL (0)	R	R
Inactive_Text	CharacterString	"Off"	O	R
Active_Text	CharacterString	“On”	O	R
Change_Of_State_Time	BACnetDatetime	-	O	-
Change_Of_State_Count	Unsigned	-	O	-
Time_Of_State_Count_Reset	BACnetDatetime	-	O	-
Elapsed_Active_Time	Unsigned	-	O	-
Time_Of_Active_Time_Reset	BACnetDatetime	-	O	-
Time_Delay	Unsigned	-	O	-
Notification_Class	Unsigned	-	O	-
Alarm_Value	BACnetBinaryPV	-	O	-
Event_Enable	BACnetEventTransitionBits	-	O	-
Acked_Transitions	BACnetEventTransitionBits	-	O	-
Notify_Type	BACnetNotifyType	-	O	-
Event_Time_Stamps	BACnetArray[N] of BACnetTimeStamp	-	O	-
Profile_Name	CharacterString	-	O	-

© HMS Industrial Networks S.L.U - All rights reserved
This information is subject to change without notice

5.3.3 OnOff_command (Binary Output Object Type)

It sets the indoor unit to On or Off.

Property Identifier	Property Datatype	Value	ASHRAE	IBOX
Object_Identifier	BACnetObjectIdentifier	(Binary Output, 0)	R	R
Object_Name	CharacterString	“OnOff_command”	R	R
Object_Type	BACnetObjectType	BINARY_OUTPUT (4)	R	R
Present_Value	BACnetBinaryPV	INACTIVE (0) / ACTIVE (1)	W	W
Description	CharacterString	-	O	-
Device_Type	CharacterString	-	O	-
Status_Flags	BACnetStatusFlags	{FALSE, FALSE, FALSE, FALSE}	R	R
Event_State	BACnetEventState	STATE_NORMAL (0)	R	R
Reliability	BACnetReliability	NO_FAULT_DETECTED (0)	O	R
Out_Of_Service	BOOLEAN	FALSE	R	R
Polarity	BACnetPolarity	NORMAL (0)	R	R
Inactive_Text	CharacterString	"Off"	O	R
Active_Text	CharacterString	“On"	O	R
Change_Of_State_Time	BACnetDatetime	-	O	-
Change_Of_State_Count	Unsigned	-	O	-
Time_Of_State_Count_Reset	BACnetDatetime	-	O	-
Elapsed_Active_Time	Unsigned	-	O	-
Time_Of_Active_Time_Reset	BACnetDatetime	-	O	-
Minimum_Off_Time	Unsigned32	-	O	-
Minimum_On_Time	Unsigned32	-	O	-
Priority_Array	BACnetPriorityArray	BACnetPriorityArray	R	R
Relinquish_Default	BACnetBinaryPV	INACTIVE (0)	R	R
Time_Delay	Unsigned	-	O	-
Notification_Class	Unsigned	-	O	-
Feedback_Value	BACnetBinaryPV	-	O	-
Event_Enable	BACnetEventTransitionBits	-	O	-
Acked_Transitions	BACnetEventTransitionBits	-	O	-
Notify_Type	BACnetNotifyType	-	O	-
Event_Time_Stamps	BACnetArray[N] of BACnetTimeStamp	-	O	-
Profile_Name	CharacterString	-	O	-

© HMS Industrial Networks S.L.U - All rights reserved
This information is subject to change without notice

5.3.4 Mode_status (Multistate Input Object Type)

It indicates the active mode for the indoor unit.

Property Identifier	Property Datatype	Value	ASHRAE	IBOX
Object_Identifier	BACnetObjectIdentifier	(Multi-state Input, 0)	R	R
Object_Name	CharacterString	“Mode_status”	R	R
Object_Type	BACnetObjectType	MULTISTATE_INPUT (13)	R	R
Present_Value	Unsigned	1 ~ 6	R	R
Description	CharacterString	-	O	-
Device_Type	CharacterString	-	O	-
Status_Flags	BACnetStatusFlags	{FALSE, FALSE/TRUE, FALSE, FALSE}	R	R
Event_State	BACnetEventState	STATE_NORMAL (0)	R	R
Reliability	BACnetReliability	NO_FAULT_DETECTED (0), UNRELIABLE_OTHER (7)	O	R
Out_Of_Service	BOOLEAN	FALSE	R	R
Number_Of_States	Unsigned	6	R	R
State_Text	BACnetArray[N] of CharacterString	*Check **Mode Status setting table** below.*	O	R
Time_Delay	Unsigned	-	O	-
Notification_Class	Unsigned	-	O	-
Alarm_Values	List of Unsigned	-	O	-
Fault_Values	List of Unsigned	-	O	-
Event_Enable	BACnetEventTransitionBits	-	O	-
Acked_Transitions	BACnetEventTransitionBits	-	O	-
Notify_Type	BACnetNotifyType	-	O	-
Event_Time_Stamps	BACnetArray[N] of BACnetTimeStamp	-	O	-
Profile_Name	CharacterString	-	O	-

Mode status setting table

Mode status interpretation is possible using the value in the following correspondence table.

Pesent_Value	Contents displayed in State_Text
1	Heat
2	Cool
3	Fan
4	Dry
5	AutoHeat
6	AutoCool

© HMS Industrial Networks S.L.U - All rights reserved
This information is subject to change without notice

5.3.5 Mode_command (Multistate Output Object Type)

It allows control over the indoor unit's mode.

Property Identifier	Property Datatype	Value	ASHRAE	IBOX
Object_Identifier	BACnetObjectIdentifier	(Multi-state Output, 0)	R	R
Object_Name	CharacterString	"Mode_command"	R	R
Object_Type	BACnetObjectType	MULTISTATE_OUTPUT (14)	R	R
Present_Value	Unsigned	1 ~ 5	W	W
Description	CharacterString	-	O	-
Device_Type	CharacterString	-	O	-
Status_Flags	BACnetStatusFlags	{FALSE, FALSE, FALSE, FALSE}	R	R
Event_State	BACnetEventState	STATE_NORMAL (0)	R	R
Reliability	BACnetReliability	NO_FAULT_DETECTED (0)	O	R
Out_Of_Service	BOOLEAN	FALSE	R	R
Number_Of_States	Unsigned	5	R	R
State_Text	BACnetArray[N] of CharacterString	*Check **Mode Command setting table** below*	O	R
Priority_Array	BACnetPriorityArray	BACnetPriorityArray	R	R
Relinquish_Default	Unsigned	1	R	R
Time_Delay	Unsigned	-	O	-
Notification_Class	Unsigned	-	O	-
Feedback_Value	Unsigned	-	O	-
Event_Enable	BACnetEventTransitionBits	-	O	-
Acked_Transitions	BACnetEventTransitionBits	-	O	-
Notify_Type	BACnetNotifyType	-	O	-
Event_Time_Stamps	BACnetArray[N] of BACnetTimeStamp	-	O	-
Profile_Name	CharacterString	-	O	-

Mode Command setting table

Mode commands can be set using the values in the following correspondence table.

Pesent_Value	Contents displayed in State_Text
1	Heat
2	Cool
3	Fan
4	Dry
5	Auto

© HMS Industrial Networks S.L.U - All rights reserved
This information is subject to change without notice

5.3.6 Setpoint_status (Analog Input Object Type)

It indicates the current setpoint temperature in the indoor unit.

Property Identifier	Property Datatype	Value	ASHRAE	IBOX
Object_Identifier	BACnetObjectIdentifier	(Analog Input, 0)	R	R
Object_Name	CharacterString	“SetPoint_status”	R	R
Object_Type	BACnetObjectType	ANALOG_INPUT (0)	R	R
Present_Value	REAL	16…30 ºC 60…86 ºF	R	R
Description	CharacterString	-	O	-
Device_Type	CharacterString	-	O	-
Status_Flags	BACnetStatusFlags	{FALSE, FALSE/TRUE, FALSE, FALSE}	R	R
Event_State	BACnetEventState	STATE_NORMAL (0)	R	R
Reliability	BACnetReliability	NO_FAULT_DETECTED (0), UNRELIABLE_OTHER (7)	O	R
Out_Of_Service	BOOLEAN	FALSE	R	R
Update_Interval	Unsigned	-	O	-
Units **	BACnetEngineeringUnits	Degrees Celsius (62), Degrees Fahrenheit (64)	R	R
Min_Pres_Value	REAL	Depends on IU	O	R
Max_Pres_Value	REAL	Depends on IU	O	R
Resolution	REAL	-	O	-
COV_Increment	REAL	0	O	W
Time_Delay	Unsigned	-	O	-
Notification_Class	Unsigned	-	O	-
High_Limit	REAL	-	O	-
Low_Limit	REAL	-	O	-
Deadband	REAL	-	O	-
Limit_Enable	BACnetLimitEnable	-	O	-
Event_Enable	BACnetEventTransitionBits	-	O	-
Acked_Transitions	BACnetEventTransitionBits	-	O	-
Notify_Type	BACnetNotifyType	-	O	-
Event_Time_Stamps	BACnetArray[N] of BACnetTimeStamp	-	O	-
Profile_Name	CharacterString	-	O	-

** Use of Celsius or Fahrenheit units can be selected throught the switch configuration. Check section 6.1 for more information.

© HMS Industrial Networks S.L.U - All rights reserved
This information is subject to change without notice

5.3.7 Setpoint_command (Analog Output Object Type)

It sets the desired temperature in the indoor unit.

Property Identifier	Property Datatype	Value	ASHRAE	IBOX
Object_Identifier	BACnetObjectIdentifier	(Analog Output, 0)	R	R
Object_Name	CharacterString	“SetPoint_command”	R	R
Object_Type	BACnetObjectType	ANALOG_OUTPUT (1)	R	R
Present_Value	REAL	16…30 ºC 60…86 ºF	R	R
Description	CharacterString	-	O	-
Device_Type	CharacterString	-	O	-
Status_Flags	BACnetStatusFlags	{FALSE, FALSE, FALSE, FALSE}	R	R
Event_State	BACnetEventState	STATE_NORMAL (0)	R	R
Reliability	BACnetReliability	NO_FAULT_DETECTED (0)	O	R
Out_Of_Service	BOOLEAN	FALSE	R	R
Update_Interval	Unsigned	-	O	-
Units **	BACnetEngineeringUnits	Degrees Celsius (62), Degrees Fahrenheit (64)	R	R
Min_Pres_Value	REAL	Depends on IU	O	R
Max_Pres_Value	REAL	Depends on IU	O	R
Resolution	REAL	-	O	-
COV_Increment	REAL	0	O	W
Priority_Array	BACnetPriorityArray	BACnetPriorityArray	R	R
Relinquish_Default	Unsigned	22	R	R
Time_Delay	Unsigned	-	O	-
Notification_Class	Unsigned	-	O	-
High_Limit	REAL	-	O	-
Low_Limit	REAL	-	O	-
Deadband	REAL	-	O	-
Limit_Enable	BACnetLimitEnable	-	O	-
Event_Enable	BACnetEventTransitionBits	-	O	-
Acked_Transitions	BACnetEventTransitionBits	-	O	-
Notify_Type	BACnetNotifyType	-	O	-
Event_Time_Stamps	BACnetArray[N] of BACnetTimeStamp	-	O	-
Profile_Name	CharacterString	-	O	-

** Use of Celsius or Fahrenheit units can be selected throught the switch configuration. Check section 6.1 for more information.

© HMS Industrial Networks S.L.U - All rights reserved
This information is subject to change without notice

5.3.8 FanSpeed_status (Multistate Input Object Type)

It indicates the fan speed status of the indoor unit.

Property Identifier	Property Datatype	Value	ASHRAE	IBOX
Object_Identifier	BACnetObjectIdentifier	(Multi-state Input, 1)	R	R
Object_Name	CharacterString	"FanSpeed_status"	R	R
Object_Type	BACnetObjectType	MULTISTATE_INPUT(13)	R	R
Present_Value	Unsigned	1 ~ 4	R	R
Description	CharacterString	-	O	-
Device_Type	CharacterString	-	O	-
Status_Flags	BACnetStatusFlags	{FALSE, FALSE/TRUE, FALSE, FALSE}	R	R
Event_State	BACnetEventState	STATE_NORMAL (0)	R	R
Reliability	BACnetReliability	NO_FAULT_DETECTED (0), UNRELIABLE_OTHER (7)	O	R
Out_Of_Service	BOOLEAN	FALSE/TRUE	R	R
Number_Of_States	Unsigned	5	R	R
State_Text	BACnetArray[N] of CharacterString	*Check **Fan Speed status setting table** below.*	O	R
Time_Delay	Unsigned	-	O	-
Notification_Class	Unsigned	-	O	-
Alarm_Values	List of Unsigned	-	O	-
Fault_Values	List of Unsigned	-	O	-
Event_Enable	BACnetEventTransitionBits	-	O	-
Acked_Transitions	BACnetEventTransitionBits	-	O	-
Notify_Type	BACnetNotifyType	-	O	-
Event_Time_Stamps	BACnetArray[N] of BACnetTimeStamp	-	O	-
Profile_Name	CharacterString	-	O	-

Fan Speed status setting table

Fan speed interpretation is possible using the value in the following correspondence table.

Pesent_Value	Contents displayed in State_Text
1	Auto
2	Low
3	Mid-1
4	High
5	Very High

© HMS Industrial Networks S.L.U - All rights reserved
This information is subject to change without notice

5.3.9 FanSpeed_command (Multistate Output Object Type)

It allows control over the fan speed for the indoor unit.

Property Identifier	Property Datatype	Value	ASHRAE	IBOX
Object_Identifier	BACnetObjectIdentifier	(Multi-state Output, 1)	R	R
Object_Name	CharacterString	"FanSpeed_command"	R	R
Object_Type	BACnetObjectType	MULTISTATE_OUTPUT (14)	R	R
Present_Value	Unsigned	1 ~ 4	W	W
Description	CharacterString	-	O	-
Device_Type	CharacterString	-	O	-
Status_Flags	BACnetStatusFlags	{FALSE, FALSE, FALSE, FALSE}	R	R
Event_State	BACnetEventState	STATE_NORMAL (0)	R	R
Reliability	BACnetReliability	NO_FAULT_DETECTED (0)	O	R
Out_Of_Service	BOOLEAN	FALSE	R	R
Number_Of_States	Unsigned	5	R	R
State_Text	BACnetArray[N] of CharacterString	*Check **Fan Speed command setting table** below*	O	R
Priority_Array	BACnetPriorityArray	BACnetPriorityArray	R	R
Relinquish_Default	Unsigned	1	R	R
Time_Delay	Unsigned	-	O	-
Notification_Class	Unsigned	-	O	-
Feedback_Value	Unsigned	-	O	-
Event_Enable	BACnetEventTransitionBits	-	O	-
Acked_Transitions	BACnetEventTransitionBits	-	O	-
Notify_Type	BACnetNotifyType	-	O	-
Event_Time_Stamps	BACnetArray[N] of BACnetTimeStamp	-	O	-
Profile_Name	CharacterString	-	O	-

Fan Speed command setting table

Fan speed interpretation is possible using the value in the following correspondence table.

Pesent_Value	Contents displayed in State_Text
1	Auto
2	Low
3	Mid-1
4	High
5	Very High

© HMS Industrial Networks S.L.U - All rights reserved
This information is subject to change without notice

5.3.10 AirDirectionUD_status (Multistate Input Object Type)

It indicates the status of the vertical vane (Up/Down) for the indoor unit.

Property Identifier	Property Datatype	Value	ASHRAE	IBOX
Object_Identifier	BACnetObjectIdentifier	(Multi-state Input, 2)	R	R
Object_Name	CharacterString	“AirDirectionUD_status”	R	R
Object_Type	BACnetObjectType	MULTISTATE_INPUT(13)	R	R
Present_Value	Unsigned	1 ~ 7	R	R
Description	CharacterString	-	O	-
Device_Type	CharacterString	-	O	-
Status_Flags	BACnetStatusFlags	{FALSE, FALSE/TRUE, FALSE, FALSE}	R	R
Event_State	BACnetEventState	STATE_NORMAL (0)	R	R
Reliability	BACnetReliability	NO_FAULT_DETECTED (0), UNRELIABLE_OTHER (7)	O	R
Out_Of_Service	BOOLEAN	FALSE/TRUE	R	R
Number_Of_States	Unsigned	7	R	R
State_Text	BACnetArray[N] of CharacterString	*Check **Air Direction Status setting table** below.*	O	R
Time_Delay	Unsigned	-	O	-
Notification_Class	Unsigned	-	O	-
Alarm_Values	List of Unsigned	-	O	-
Fault_Values	List of Unsigned	-	O	-
Event_Enable	BACnetEventTransitionBits	-	O	-
Acked_Transitions	BACnetEventTransitionBits	-	O	-
Notify_Type	BACnetNotifyType	-	O	-
Event_Time_Stamps	BACnetArray[N] of BACnetTimeStamp	-	O	-
Profile_Name	CharacterString	-	O	-

Air direction Up/Down status setting table

Air direction interpretation is possible using the value in the following correspondence table.

Pesent_Value	Contents displayed in State_Text
1	Stop
2	Up
3	Mid-1
4	Mid-2
5	Mid-3
6	Down
7	Swing

© HMS Industrial Networks S.L.U - All rights reserved
This information is subject to change without notice

5.3.11 AirDirectionUD_command (Multistate Output Object Type)

It allows control over the vertical air direction (Up/Down) for the indoor unit.

Property Identifier	Property Datatype	Value	ASHRAE	IBOX
Object_Identifier	BACnetObjectIdentifier	(Multi-state Output, 2)	R	R
Object_Name	CharacterString	“AirDirectionUD_command”	R	R
Object_Type	BACnetObjectType	MULTISTATE_OUTPUT (14)	R	R
Present_Value	Unsigned	1 ~ 7	W	W
Description	CharacterString	-	O	-
Device_Type	CharacterString	-	O	-
Status_Flags	BACnetStatusFlags	{FALSE, FALSE, FALSE, FALSE}	R	R
Event_State	BACnetEventState	STATE_NORMAL (0)	R	R
Reliability	BACnetReliability	NO_FAULT_DETECTED (0)	O	R
Out_Of_Service	BOOLEAN	FALSE	R	R
Number_Of_States	Unsigned	7	R	R
State_Text	BACnetArray[N] of CharacterString	*Check **Air Direction Command setting table** below*	O	R
Priority_Array	BACnetPriorityArray	-	R	R
Relinquish_Default	Unsigned	-	R	R
Time_Delay	Unsigned	-	O	-
Notification_Class	Unsigned	-	O	-
Feedback_Value	Unsigned	-	O	-
Event_Enable	BACnetEventTransitionBits	-	O	-
Acked_Transitions	BACnetEventTransitionBits	-	O	-
Notify_Type	BACnetNotifyType	-	O	-
Event_Time_Stamps	BACnetArray[N] of BACnetTimeStamp	-	O	-
Profile_Name	CharacterString	-	O	-

Air direction Up/Down Command setting table

Air direction commands can be set using the values in the following correspondence table.

Pesent_Value	Contents displayed in State_Text
1	Stop
2	Up
3	Mid-1
4	Mid-2
5	Mid-3
6	Down
7	Swing

© HMS Industrial Networks S.L.U - All rights reserved
This information is subject to change without notice

5.3.12 RoomTemperature_status (Analog Input Object Type)

It indicates the room temperature from the sensor in the indoor unit.

Property Identifier	Property Datatype	Value	ASHRAE	IBOX
Object_Identifier	BACnetObjectIdentifier	(Analog Input, 1)	R	R
Object_Name	CharacterString	“RoomTemperature”	R	R
Object_Type	BACnetObjectType	ANALOG_INPUT (0)	R	R
Present_Value	REAL	ºC / ºF	R	R
Description	CharacterString	-	O	-
Device_Type	CharacterString	-	O	-
Status_Flags	BACnetStatusFlags	{FALSE, FALSE/TRUE, FALSE, FALSE}	R	R
Event_State	BACnetEventState	STATE_NORMAL (0)	R	R
Reliability	BACnetReliability	NO_FAULT_DETECTED (0), UNRELIABLE_OTHER (7)	O	R
Out_Of_Service	BOOLEAN	FALSE/TRUE	R	R
Update_Interval	Unsigned	-	O	-
Units	BACnetEngineeringUnits	Degrees Celsius (62) Degrees Fahrenheit (64)	R	R
Min_Pres_Value	REAL	-	O	-
Max_Pres_Value	REAL	-	O	-
Resolution	REAL	-	O	-
COV_Increment	REAL	0	O	W
Time_Delay	Unsigned	-	O	-
Notification_Class	Unsigned	-	O	-
High_Limit	REAL	-	O	-
Low_Limit	REAL	-	O	-
Deadband	REAL	-	O	-
Limit_Enable	BACnetLimitEnable	-	O	-
Event_Enable	BACnetEventTransitionBits	-	O	-
Acked_Transitions	BACnetEventTransitionBits	-	O	-
Notify_Type	BACnetNotifyType	-	O	-
Event_Time_Stamps	BACnetArray[N] of BACnetTimeStamp	-	O	-
Profile_Name	CharacterString	-	O	-

** Use of Celsius or Fahrenheit units can be selected throught the switch configuration. Check section 6.1 for more information.

© HMS Industrial Networks S.L.U - All rights reserved
This information is subject to change without notice

5.3.13 RoomTemperature_command (Analog Output Object Type)

It sets the room temperature in the indoor unit.

Property Identifier	Property Datatype	Value	ASHRAE	IBOX
Object_Identifier	BACnetObjectIdentifier	(Analog Output, 1)	R	R
Object_Name	CharacterString	“RoomTemperature_command”	R	R
Object_Type	BACnetObjectType	ANALOG_OUTPUT (1)	R	R
Present_Value	REAL	ºC / ºF	R	R
Description	CharacterString	-	O	-
Device_Type	CharacterString	-	O	-
Status_Flags	BACnetStatusFlags	{FALSE, FALSE, FALSE, FALSE}	R	R
Event_State	BACnetEventState	STATE_NORMAL (0)	R	R
Reliability	BACnetReliability	NO_FAULT_DETECTED (0)	O	R
Out_Of_Service	BOOLEAN	FALSE	R	R
Update_Interval	Unsigned	-	O	-
Units **	BACnetEngineeringUnits	Degrees Celsius (62), Degrees Fahrenheit (64)	R	R
Min_Pres_Value	REAL	Depends on IU	O	R
Max_Pres_Value	REAL	Depends on IU	O	R
Resolution	REAL	-	O	-
COV_Increment	REAL	0	O	W
Priority_Array	BACnetPriorityArray	BACnetPriorityArray	R	R
Relinquish_Default	Unsigned	22	R	R
Time_Delay	Unsigned	-	O	-
Notification_Class	Unsigned	-	O	-
High_Limit	REAL	-	O	-
Low_Limit	REAL	-	O	-
Deadband	REAL	-	O	-
Limit_Enable	BACnetLimitEnable	-	O	-
Event_Enable	BACnetEventTransitionBits	-	O	-
Acked_Transitions	BACnetEventTransitionBits	-	O	-
Notify_Type	BACnetNotifyType	-	O	-
Event_Time_Stamps	BACnetArray[N] of BACnetTimeStamp	-	O	-
Profile_Name	CharacterString	-	O	-

** Use of Celsius or Fahrenheit units can be selected throught the switch configuration. Check section 6.1 for more information.

© HMS Industrial Networks S.L.U - All rights reserved
This information is subject to change without notice

5.3.14 ErrorCode (Analog Input Object Type)

It indicates the current error present in the AC system.

Property Identifier	Property Datatype	Value	ASHRAE	IBOX
Object_Identifier	BACnetObjectIdentifier	(Analog Input, 2)	R	R
Object_Name	CharacterString	“ErrorCode”	R	R
Object_Type	BACnetObjectType	ANALOG_INPUT (0)	R	R
Present_Value	REAL	-1… 2099*	R	R
Description	CharacterString	-	O	-
Device_Type	CharacterString	-	O	-
Status_Flags	BACnetStatusFlags	{FALSE, FALSE, FALSE, FALSE}	R	R
Event_State	BACnetEventState	STATE_NORMAL (0)	R	R
Reliability	BACnetReliability	NO_FAULT_DETECTED (0)	O	R
Out_Of_Service	BOOLEAN	FALSE	R	R
Update_Interval	Unsigned	300	O	-
Units	BACnetEngineeringUnits	NO_UNITS (95)	R	R
Min_Pres_Value	REAL	-	O	-
Max_Pres_Value	REAL	-	O	-
Resolution	REAL	-	O	-
COV_Increment	REAL	0	O	W
Time_Delay	Unsigned	-	O	-
Notification_Class	Unsigned	-	O	-
High_Limit	REAL	-	O	-
Low_Limit	REAL	-	O	-
Deadband	REAL	-	O	-
Limit_Enable	BACnetLimitEnable	-	O	-
Event_Enable	BACnetEventTransitionBits	-	O	-
Acked_Transitions	BACnetEventTransitionBits	-	O	-
Notify_Type	BACnetNotifyType	-	O	-
Event_Time_Stamps	BACnetArray[N] of BACnetTimeStamp	-	O	-
Profile_Name	CharacterString	-	O	-

* Check section 11 for more information about each error code.

© HMS Industrial Networks S.L.U - All rights reserved
This information is subject to change without notice

5.3.15 ErrorCodeM (Multistate Input Object Type)

It indicates the current error present in the AC system.

Property Identifier	Property Datatype	Value	ASHRAE	IBOX
Object_Identifier	BACnetObjectIdentifier	(Multi-state Input, 4)	R	R
Object_Name	CharacterString	"ErrorCodeM"	R	R
Object_Type	BACnetObjectType	MULTISTATE_INPUT(13)	R	R
Present_Value	Unsigned	1 ~ 251	R	R
Description	CharacterString	-	O	-
Device_Type	CharacterString	-	O	-
Status_Flags	BACnetStatusFlags	{FALSE, FALSE, FALSE, FALSE}	R	R
Event_State	BACnetEventState	STATE_NORMAL (0)	R	R
Reliability	BACnetReliability	NO_FAULT_DETECTED (0)	O	R
Out_Of_Service	BOOLEAN	FALSE	R	R
Number_Of_States	Unsigned	251	R	R
State_Text	BACnetArray[N] of CharacterString	*Check **Error Code table** below.*	O	R
Time_Delay	Unsigned	-	O	-
Notification_Class	Unsigned	-	O	-
Alarm_Values	List of Unsigned	-	O	-
Fault_Values	List of Unsigned	-	O	-
Event_Enable	BACnetEventTransitionBits	-	O	-
Acked_Transitions	BACnetEventTransitionBits	-	O	-
Notify_Type	BACnetNotifyType	-	O	-
Event_Time_Stamps	BACnetArray[N] of BACnetTimeStamp	-	O	-
Profile_Name	CharacterString	-	O	-

Error Code table

In the table below you will find the error correspondence value.

Pesent_Value	State_Text	Pesent_Value	State_Text	Pesent_Value	State_Text	Pesent_Value	State_Text
1		66	E02	132	H06	198	L10
2	CommError	67	E03	133	H07	199	L11
3	A01	68	E04	134	H08	200	L12
4	A02	69	E05	135	H09	201	L13
5	A03	70	E06	136	H10	202	L14
6	A04	71	E07	137	H11	203	L15
7	A05	72	E08	138	H12	204	L16
8	A06	73	E09	139	H13	205	L17
9	A07	74	E10	140	H14	206	L18
10	A08	75	E11	141	H15	207	L19
11	A09	76	E12	142	H16	208	L20
12	A10	77	E13	143	H17	209	L21

© HMS Industrial Networks S.L.U - All rights reserved
This information is subject to change without notice

13	A11	78	E14	144	H18	210	L22
14	A12	79	E15	145	H19	211	L23
15	A13	80	E16	146	H20	212	L24
16	A14	81	E17	147	H21	213	L25
17	A15	82	E18	148	H22	214	L26
18	A16	83	E19	149	H23	215	L27
19	A17	84	E20	150	H24	216	L28
20	A18	85	E21	151	H25	217	L29
21	A19	86	E22	152	H26	218	L30
22	A20	87	E23	153	H27	219	L31
23	A21	88	E24	154	H28	220	P01
24	A22	89	E25	155	H29	221	P02
25	A23	90	E26	156	H30	222	P03
26	A24	91	E27	157	H31	223	P04
27	A25	92	E28	158	J01	224	P05
28	A26	93	E29	159	J02	225	P06
29	A27	94	E30	160	J03	226	P07
30	A28	95	E31	161	J04	227	P08
31	A29	96	F01	162	J05	228	P09
32	A30	97	F02	163	J06	229	P10
33	A31	98	F03	164	J07	230	P11
34	C01	99	F04	165	J08	231	P12
35	C02	100	F05	166	J09	232	P13
36	C03	101	F06	167	J10	233	P14
37	C04	102	F07	168	J11	234	P15
38	C05	103	F08	169	J12	235	P16
39	C06	104	F09	170	J13	236	P17
40	C07	105	F10	171	J14	237	P18
41	C08	106	F11	172	J15	238	P19
42	C09	107	F12	173	J16	239	P20
43	C10	108	F13	174	J17	240	P21
44	C11	109	F14	175	J18	241	P22
45	C12	110	F15	176	J19	242	P23
46	C13	111	F16	177	J20	243	P24
47	C14	112	F17	178	J21	244	P25
48	C15	113	F18	179	J22	245	P26
49	C16	114	F19	180	J23	246	P27
50	C17	115	F20	181	J24	247	P28
51	C18	116	F21	182	J25	248	P29
52	C19	117	F22	183	J26	249	P30
53	C20	118	F23	184	J27	250	P31
54	C21	119	F24	185	J28	251	UNKNOWN
55	C22	120	F25	186	J29		
56	C23	121	F26	187	J30		
57	C24	122	F27	188	J31		
58	C25	123	F28	189	L01		
59	C26	124	F29	190	L02		
60	C27	125	F30	191	L03		
61	C28	126	F31	192	L04		
62	C29	127	H01	193	L05		
63	C30	128	H02	194	L06		
64	C31	129	H03	195	L07		
65	E01	130	H04	196	L08		
66	E02	131	H05	197	L09		

Check section 11 for more information about each error code.

© HMS Industrial Networks S.L.U - All rights reserved
This information is subject to change without notice

5.3.16 ErrorActive (Binary Input Object Type)

It indicates if there is an active error in the indoor unit.

Property Identifier	Property Datatype	Value	ASHRAE	IBOX
Object_Identifier	BACnetObjectIdentifier	(Binary Input, 1)	R	R
Object_Name	CharacterString	“ErrorActive”	R	R
Object_Type	BACnetObjectType	BINARY_INPUT (3)	R	R
Present_Value	BACnetBinaryPV	INACTIVE (0) / ACTIVE (1)	R	R
Description	CharacterString	-	O	-
Device_Type	CharacterString	-	O	-
Status_Flags	BACnetStatusFlags	{FALSE, FALSE, FALSE, FALSE}	R	R
Event_State	BACnetEventState	STATE_NORMAL (0)	R	R
Reliability	BACnetReliability	NO_FAULT_DETECTED (0)	O	R
Out_Of_Service	BOOLEAN	FALSE	R	R
Polarity	BACnetPolarity	NORMAL (0)	R	R
Inactive_Text	CharacterString	"No"	O	R
Active_Text	CharacterString	“Error”	O	R
Change_Of_State_Time	BACnetDatetime	-	O	-
Change_Of_State_Count	Unsigned	-	O	-
Time_Of_State_Count_Reset	BACnetDatetime	-	O	-
Elapsed_Active_Time	Unsigned	-	O	-
Time_Of_Active_Time_Reset	BACnetDatetime	-	O	-
Time_Delay	Unsigned	-	O	-
Notification_Class	Unsigned	-	O	-
Alarm_Value	BACnetBinaryPV	-	O	-
Event_Enable	BACnetEventTransitionBits	-	O	-
Acked_Transitions	BACnetEventTransitionBits	-	O	-
Notify_Type	BACnetNotifyType	-	O	-
Event_Time_Stamps	BACnetArray[N] of BACnetTimeStamp	-	O	-
Profile_Name	CharacterString	-	O	-

© HMS Industrial Networks S.L.U - All rights reserved
This information is subject to change without notice

5.3.17 OnTimeCounter (Analog Value Object Type)

It indicates the amount of time the units have been running.

Property Identifier	Property Datatype	Value	ASHRAE	IBOX
Object_Identifier	BACnetObjectIdentifier	(Analog Value, 0)	R	R
Object_Name	CharacterString	“OnTimeCounter”	R	R
Object_Type	BACnetObjectType	ANALOG_VALUE (2)	R	R
Present_Value	REAL	0 .. 65535	R	R
Description	CharacterString	-	O	-
Status_Flags	BACnetStatusFlags	{FALSE, FALSE, FALSE, FALSE}	R	R
Event_State	BACnetEventState	STATE_NORMAL (0)	R	R
Reliability	BACnetReliability	NO_FAULT_DETECTED (0)	O	R
Out_Of_Service	BOOLEAN	FALSE	R	R
Update_Interval	Unsigned	-	O	-
Units	BACnetEngineeringUnits	Hours (71)	R	R
Min_Pres_Value	REAL	-	O	-
Max_Pres_Value	REAL	-	O	-
Resolution	REAL	-	O	-
COV_Increment	REAL	0	O	W
Time_Delay	Unsigned	-	O	-
Notification_Class	Unsigned	-	O	-
High_Limit	REAL	-	O	-
Low_Limit	REAL	-	O	-
Deadband	REAL	-	O	-
Limit_Enable	BACnetLimitEnable	-	O	-
Event_Enable	BACnetEventTransitionBits	-	O	-
Acked_Transitions	BACnetEventTransitionBits	-	O	-
Notify_Type	BACnetNotifyType	-	O	-
Event_Time_Stamps	BACnetArray[N] of BACnetTimeStamp	-	O	-
Profile_Name	CharacterString	-	O	-

© HMS Industrial Networks S.L.U - All rights reserved
This information is subject to change without notice

5.3.18 FilterSign (Binary Input Object Type)

It indicates the status for the filter, if in error or not.

Property Identifier	Property Datatype	Value	ASHRAE	IBOX
Object_Identifier	BACnetObjectIdentifier	(Binary Input, 6)	R	R
Object_Name	CharacterString	“FilterSign”	R	R
Object_Type	BACnetObjectType	BINARY_INPUT (3)	R	R
Present_Value	BACnetBinaryPV	INACTIVE (0) / ACTIVE (1)	R	R
Description	CharacterString	-	O	-
Device_Type	CharacterString	-	O	-
Status_Flags	BACnetStatusFlags	{FALSE, FALSE, FALSE, FALSE}	R	R
Event_State	BACnetEventState	STATE_NORMAL (0)	R	R
Reliability	BACnetReliability	NO_FAULT_DETECTED (0)	O	R
Out_Of_Service	BOOLEAN	FALSE	R	R
Polarity	BACnetPolarity	NORMAL (0)	R	R
Inactive_Text	CharacterString	"OK"	O	R
Active_Text	CharacterString	“Dirty”	O	R
Change_Of_State_Time	BACnetDatetime	-	O	-
Change_Of_State_Count	Unsigned	-	O	-
Time_Of_State_Count_Reset	BACnetDatetime	-	O	-
Elapsed_Active_Time	Unsigned	-	O	-
Time_Of_Active_Time_Reset	BACnetDatetime	-	O	-
Time_Delay	Unsigned	-	O	-
Notification_Class	Unsigned	-	O	-
Alarm_Value	BACnetBinaryPV	-	O	-
Event_Enable	BACnetEventTransitionBits	-	O	-
Acked_Transitions	BACnetEventTransitionBits	-	O	-
Notify_Type	BACnetNotifyType	-	O	-
Event_Time_Stamps	BACnetArray[N] of BACnetTimeStamp	-	O	-
Profile_Name	CharacterString	-	O	-

© HMS Industrial Networks S.L.U - All rights reserved
This information is subject to change without notice

5.3.19 FilterReset (Binary Output Object Type)

It resets the filter signal.

Property Identifier	Property Datatype	Value	ASHRAE	IBOX
Object_Identifier	BACnetObjectIdentifier	(Binary Output, 4)	R	R
Object_Name	CharacterString	“FilterReset”	R	R
Object_Type	BACnetObjectType	BINARY_OUTPUT (4)	R	R
Present_Value	BACnetBinaryPV	INACTIVE (0) / ACTIVE (1)	W	W
Description	CharacterString	-	O	-
Device_Type	CharacterString	-	O	-
Status_Flags	BACnetStatusFlags	{FALSE, FALSE, FALSE, FALSE}	R	R
Event_State	BACnetEventState	STATE_NORMAL (0)	R	R
Reliability	BACnetReliability	NO_FAULT_DETECTED (0)	O	R
Out_Of_Service	BOOLEAN	FALSE	R	R
Polarity	BACnetPolarity	NORMAL (0)	R	R
Inactive_Text	CharacterString	-	O	R
Active_Text	CharacterString	“Reset"	O	R
Change_Of_State_Time	BACnetDatetime	-	O	-
Change_Of_State_Count	Unsigned	-	O	-
Time_Of_State_Count_Reset	BACnetDatetime	-	O	-
Elapsed_Active_Time	Unsigned	-	O	-
Time_Of_Active_Time_Reset	BACnetDatetime	-	O	-
Minimum_Off_Time	Unsigned32	-	O	-
Minimum_On_Time	Unsigned32	-	O	-
Priority_Array	BACnetPriorityArray	BACnetPriorityArray	R	R
Relinquish_Default	BACnetBinaryPV	INACTIVE (0)	R	R
Time_Delay	Unsigned	-	O	-
Notification_Class	Unsigned	-	O	-
Feedback_Value	BACnetBinaryPV	-	O	-
Event_Enable	BACnetEventTransitionBits	-	O	-
Acked_Transitions	BACnetEventTransitionBits	-	O	-
Notify_Type	BACnetNotifyType	-	O	-
Event_Time_Stamps	BACnetArray[N] of BACnetTimeStamp	-	O	-
Profile_Name	CharacterString	-	O	-

© HMS Industrial Networks S.L.U - All rights reserved
This information is subject to change without notice

5.3.20 Occupancy (Multistate Value Object Type)

It indicates the use or not of the occupancy function. Check section 7.4 for more information.

Property Identifier	Property Datatype	Value	ASHRAE	IBOX
Object_Identifier	BACnetObjectIdentifier	(Multi-state Output, 0)	R	R
Object_Name	CharacterString	“Occupancy”	R	R
Object_Type	BACnetObjectType	MULTISTATE_VALUE (19)	R	R
Present_Value	Unsigned	1 ~ 3	W	W
Description	CharacterString	-	O	-
Status_Flags	BACnetStatusFlags	{FALSE, FALSE, FALSE, FALSE}	R	R
Event_State	BACnetEventState	STATE_NORMAL (0)	R	R
Reliability	BACnetReliability	NO_FAULT_DETECTED (0)	O	R
Out_Of_Service	BOOLEAN	FALSE	R	R
Number_Of_States	Unsigned	3	R	R
State_Text	BACnetArray[N] of CharacterString	*Check **Occupancy setting table** below*	O	R
Priority_Array	BACnetPriorityArray	-	R	-
Relinquish_Default	Unsigned	-	R	-
Time_Delay	Unsigned	-	O	-
Notification_Class	Unsigned	-	O	-
Alarm_Value	Unsigned	-	O	-
Fault_Value	Unsigned		O	-
Event_Enable	BACnetEventTransitionBits	-	O	-
Acked_Transitions	BACnetEventTransitionBits	-	O	-
Notify_Type	BACnetNotifyType	-	O	-
Event_Time_Stamps	BACnetArray[N] of BACnetTimeStamp	-	O	-
Profile_Name	CharacterString	-	O	-

Occupancy values table

Check possible Occupancy values in the following correspondence table.

Pesent_Value	Contents displayed in State_Text
1	Occupied
2	Unoccupied
3	Disabled

© HMS Industrial Networks S.L.U - All rights reserved
This information is subject to change without notice

5.3.21 OccupiedCoolSetPoint (Analog Value Object Type)

It indicates the current Setpoint when Cool mode is selected and Occupancy is enabled and the room is occupied. Check section 7.4 for more information.

Property Identifier	Property Datatype	Value	ASHRAE	IBOX
Object_Identifier	BACnetObjectIdentifier	(Analog Value, 1)	R	R
Object_Name	CharacterString	“OccupiedCoolSetPoint”	R	R
Object_Type	BACnetObjectType	ANALOG_VALUE (2)	R	R
Present_Value	REAL	0 .. 65535	R	R
Description	CharacterString	-	O	-
Status_Flags	BACnetStatusFlags	{FALSE, FALSE, FALSE, FALSE}	R	R
Event_State	BACnetEventState	STATE_NORMAL (0)	R	R
Reliability	BACnetReliability	NO_FAULT_DETECTED (0)	O	R
Out_Of_Service	BOOLEAN	FALSE	R	R
Update_Interval	Unsigned	-	O	-
Units	BACnetEngineeringUnits	Hours (71)	R	R
Min_Pres_Value	REAL	-	O	-
Max_Pres_Value	REAL	-	O	-
Resolution	REAL	-	O	-
COV_Increment	REAL	0	O	W
Time_Delay	Unsigned	-	O	-
Notification_Class	Unsigned	-	O	-
High_Limit	REAL	-	O	-
Low_Limit	REAL	-	O	-
Deadband	REAL	-	O	-
Limit_Enable	BACnetLimitEnable	-	O	-
Event_Enable	BACnetEventTransitionBits	-	O	-
Acked_Transitions	BACnetEventTransitionBits	-	O	-
Notify_Type	BACnetNotifyType	-	O	-
Event_Time_Stamps	BACnetArray[N] of BACnetTimeStamp	-	O	-
Profile_Name	CharacterString	-	O	-

© HMS Industrial Networks S.L.U - All rights reserved
This information is subject to change without notice

5.3.22 OccupiedHeatSetPoint (Analog Value Object Type)

It indicates the current Setpoint when Heat mode is selected and Occupancy is enabled and the room is occupied. Check section 7.4 for more information.

Property Identifier	Property Datatype	Value	ASHRAE	IBOX
Object_Identifier	BACnetObjectIdentifier	(Analog Value, 2)	R	R
Object_Name	CharacterString	“OccupiedHeatSetPoint”	R	R
Object_Type	BACnetObjectType	ANALOG_VALUE (2)	R	R
Present_Value	REAL	0 .. 65535	R	R
Description	CharacterString	-	O	-
Status_Flags	BACnetStatusFlags	{FALSE, FALSE, FALSE, FALSE}	R	R
Event_State	BACnetEventState	STATE_NORMAL (0)	R	R
Reliability	BACnetReliability	NO_FAULT_DETECTED (0)	O	R
Out_Of_Service	BOOLEAN	FALSE	R	R
Update_Interval	Unsigned	-	O	-
Units	BACnetEngineeringUnits	Hours (71)	R	R
Min_Pres_Value	REAL	-	O	-
Max_Pres_Value	REAL	-	O	-
Resolution	REAL	-	O	-
COV_Increment	REAL	0	O	W
Time_Delay	Unsigned	-	O	-
Notification_Class	Unsigned	-	O	-
High_Limit	REAL	-	O	-
Low_Limit	REAL	-	O	-
Deadband	REAL	-	O	-
Limit_Enable	BACnetLimitEnable	-	O	-
Event_Enable	BACnetEventTransitionBits	-	O	-
Acked_Transitions	BACnetEventTransitionBits	-	O	-
Notify_Type	BACnetNotifyType	-	O	-
Event_Time_Stamps	BACnetArray[N] of BACnetTimeStamp	-	O	-
Profile_Name	CharacterString	-	O	-

© HMS Industrial Networks S.L.U - All rights reserved
This information is subject to change without notice

5.3.23 UnoccupiedCoolSetPoint (Analog Value Object Type)

It indicates the current Setpoint when Cool mode is selected and Occupancy is enabled and the room is unoccupied. Check section 7.4 for more information.

Property Identifier	Property Datatype	Value	ASHRAE	IBOX
Object_Identifier	BACnetObjectIdentifier	(Analog Value, 3)	R	R
Object_Name	CharacterString	“UnoccupiedCoolSetPoint”	R	R
Object_Type	BACnetObjectType	ANALOG_VALUE (2)	R	R
Present_Value	REAL	0 .. 65535	R	R
Description	CharacterString	-	O	-
Status_Flags	BACnetStatusFlags	{FALSE, FALSE, FALSE, FALSE}	R	R
Event_State	BACnetEventState	STATE_NORMAL (0)	R	R
Reliability	BACnetReliability	NO_FAULT_DETECTED (0)	O	R
Out_Of_Service	BOOLEAN	FALSE	R	R
Update_Interval	Unsigned	-	O	-
Units	BACnetEngineeringUnits	Hours (71)	R	R
Min_Pres_Value	REAL	-	O	-
Max_Pres_Value	REAL	-	O	-
Resolution	REAL	-	O	-
COV_Increment	REAL	0	O	W
Time_Delay	Unsigned	-	O	-
Notification_Class	Unsigned	-	O	-
High_Limit	REAL	-	O	-
Low_Limit	REAL	-	O	-
Deadband	REAL	-	O	-
Limit_Enable	BACnetLimitEnable	-	O	-
Event_Enable	BACnetEventTransitionBits	-	O	-
Acked_Transitions	BACnetEventTransitionBits	-	O	-
Notify_Type	BACnetNotifyType	-	O	-
Event_Time_Stamps	BACnetArray[N] of BACnetTimeStamp	-	O	-
Profile_Name	CharacterString	-	O	-

© HMS Industrial Networks S.L.U - All rights reserved
This information is subject to change without notice

5.3.24 UnoccupiedHeatSetPoint (Analog Value Object Type)

It indicates the current Setpoint when Heat mode is selected and Occupancy is enabled and the room is unoccupied. Check section 7.4 for more information.

Property Identifier	Property Datatype	Value	ASHRAE	IBOX
Object_Identifier	BACnetObjectIdentifier	(Analog Value, 4)	R	R
Object_Name	CharacterString	“UnoccupiedHeatSetPoint”	R	R
Object_Type	BACnetObjectType	ANALOG_VALUE (2)	R	R
Present_Value	REAL	0 .. 65535	R	R
Description	CharacterString	-	O	-
Status_Flags	BACnetStatusFlags	{FALSE, FALSE, FALSE, FALSE}	R	R
Event_State	BACnetEventState	STATE_NORMAL (0)	R	R
Reliability	BACnetReliability	NO_FAULT_DETECTED (0)	O	R
Out_Of_Service	BOOLEAN	FALSE	R	R
Update_Interval	Unsigned	-	O	-
Units	BACnetEngineeringUnits	Hours (71)	R	R
Min_Pres_Value	REAL	-	O	-
Max_Pres_Value	REAL	-	O	-
Resolution	REAL	-	O	-
COV_Increment	REAL	0	O	W
Time_Delay	Unsigned	-	O	-
Notification_Class	Unsigned	-	O	-
High_Limit	REAL	-	O	-
Low_Limit	REAL	-	O	-
Deadband	REAL	-	O	-
Limit_Enable	BACnetLimitEnable	-	O	-
Event_Enable	BACnetEventTransitionBits	-	O	-
Acked_Transitions	BACnetEventTransitionBits	-	O	-
Notify_Type	BACnetNotifyType	-	O	-
Event_Time_Stamps	BACnetArray[N] of BACnetTimeStamp	-	O	-
Profile_Name	CharacterString	-	O	-

© HMS Industrial Networks S.L.U - All rights reserved
This information is subject to change without notice

5.3.25 OccupancyContinuousCheck (Binary Value Object Type)

It indicates if the system is continuously checking the setpoint and occupancy conditions. Check section 7.4 for more information.

Property Identifier	Property Datatype	Value	ASHRAE	IBOX
Object_Identifier	BACnetObjectIdentifier	(Binary Value, 0)	R	R
Object_Name	CharacterString	“OccupancyContinuousCheck”	R	R
Object_Type	BACnetObjectType	BINARY_VALUE (5)	R	R
Present_Value	BACnetBinaryPV	INACTIVE (0) / ACTIVE (1)	W	W
Description	CharacterString	-	O	-
Status_Flags	BACnetStatusFlags	{FALSE, FALSE, FALSE, FALSE}	R	R
Event_State	BACnetEventState	STATE_NORMAL (0)	R	R
Reliability	BACnetReliability	NO_FAULT_DETECTED (0)	O	R
Out_Of_Service	BOOLEAN	FALSE	R	R
Inactive_Text	CharacterString	"Disabled"	O	R
Active_Text	CharacterString	“Enabled"	O	R
Change_Of_State_Time	BACnetDatetime	-	O	-
Change_Of_State_Count	Unsigned	-	O	-
Time_Of_State_Count_Reset	BACnetDatetime	-	O	-
Elapsed_Active_Time	Unsigned	-	O	-
Time_Of_Active_Time_Reset	BACnetDatetime	-	O	-
Minimum_Off_Time	Unsigned32	-	O	-
Minimum_On_Time	Unsigned32	-	O	-
Priority_Array	BACnetPriorityArray	BACnetPriorityArray	R	-
Relinquish_Default	BACnetBinaryPV	INACTIVE (0)	R	-
Time_Delay	Unsigned	-	O	-
Notification_Class	Unsigned	-	O	-
Alarm_Value	BACnetBinaryPV	-	O	-
Event_Enable	BACnetEventTransitionBits	-	O	-
Acked_Transitions	BACnetEventTransitionBits	-	O	-
Notify_Type	BACnetNotifyType	-	O	-
Event_Time_Stamps	BACnetArray[N] of BACnetTimeStamp	-	O	-
Profile_Name	CharacterString	-	O	-

© HMS Industrial Networks S.L.U - All rights reserved
This information is subject to change without notice

5.3.26 UnoccupiedDeadbandAction (Binary Value Object Type)

It indicates the action to be performed by the system when Unoccupancy is enabled and Room Temperature is within the deadband. Check section 7.4 for more information.

Property Identifier	Property Datatype	Value	ASHRAE	IBOX
Object_Identifier	BACnetObjectIdentifier	(Binary Value, 1)	R	R
Object_Name	CharacterString	“UnoccupiedDeadbandAction”	R	R
Object_Type	BACnetObjectType	BINARY_VALUE (5)	R	R
Present_Value	BACnetBinaryPV	INACTIVE (0) / ACTIVE (1)	W	W
Description	CharacterString	-	O	-
Status_Flags	BACnetStatusFlags	{FALSE, FALSE, FALSE, FALSE}	R	R
Event_State	BACnetEventState	STATE_NORMAL (0)	R	R
Reliability	BACnetReliability	NO_FAULT_DETECTED (0)	O	R
Out_Of_Service	BOOLEAN	FALSE	R	R
Inactive_Text	CharacterString	"Off"	O	R
Active_Text	CharacterString	“CurrentMode"	O	R
Change_Of_State_Time	BACnetDatetime	-	O	-
Change_Of_State_Count	Unsigned	-	O	-
Time_Of_State_Count_Reset	BACnetDatetime	-	O	-
Elapsed_Active_Time	Unsigned	-	O	-
Time_Of_Active_Time_Reset	BACnetDatetime	-	O	-
Minimum_Off_Time	Unsigned32	-	O	-
Minimum_On_Time	Unsigned32	-	O	-
Priority_Array	BACnetPriorityArray	BACnetPriorityArray	R	-
Relinquish_Default	BACnetBinaryPV	INACTIVE (0)	R	-
Time_Delay	Unsigned	-	O	-
Notification_Class	Unsigned	-	O	-
Alarm_Value	BACnetBinaryPV	-	O	-
Event_Enable	BACnetEventTransitionBits	-	O	-
Acked_Transitions	BACnetEventTransitionBits	-	O	-
Notify_Type	BACnetNotifyType	-	O	-
Event_Time_Stamps	BACnetArray[N] of BACnetTimeStamp	-	O	-
Profile_Name	CharacterString	-	O	-

© HMS Industrial Networks S.L.U - All rights reserved
This information is subject to change without notice

5.3.27 RemoteControllerProhibit_status (Multistate Input Object Type)

It indicates the current error present in the AC system.

Property Identifier	Property Datatype	Value	ASHRAE	IBOX
Object_Identifier	BACnetObjectIdentifier	(Multi-state Input, 6)	R	R
Object_Name	CharacterString	"RemoteControllerProhibit_status"	R	R
Object_Type	BACnetObjectType	MULTISTATE_INPUT (13)	R	R
Present_Value	Unsigned	1 ~ 8	R	R
Description	CharacterString	-	O	-
Device_Type	CharacterString	-	O	-
Status_Flags	BACnetStatusFlags	{FALSE, FALSE/TRUE, FALSE, FALSE}	R	R
Event_State	BACnetEventState	STATE_NORMAL (0)	R	R
Reliability	BACnetReliability	NO_FAULT_DETECTED (0), UNRELIABLE_OTHER (7)	O	R
Out_Of_Service	BOOLEAN	FALSE	R	R
Number_Of_States	Unsigned	8	R	R
State_Text	BACnetArray[N] of CharacterString	*Check **Error Code table** below.*	O	R
Time_Delay	Unsigned	-	O	-
Notification_Class	Unsigned	-	O	-
Alarm_Values	List of Unsigned	-	O	-
Fault_Values	List of Unsigned	-	O	-
Event_Enable	BACnetEventTransitionBits	-	O	-
Acked_Transitions	BACnetEventTransitionBits	-	O	-
Notify_Type	BACnetNotifyType	-	O	-
Event_Time_Stamps	BACnetArray[N] of BACnetTimeStamp	-	O	-
Profile_Name	CharacterString	-	O	-

Remote Controller Prohibit status

In the table below you will find the prohibition correspondence value.

Pesent_Value	Contents displayed in State_Text
1	`AllPermitted`
2	`OnOff`
3	`Mode`
4	`Mode, OnOff`
5	`SetPoint`
6	`SetPoint, OnOff`
7	`SetPoint, Mode`
8	`SetPoint, Mode, OnOff`

© HMS Industrial Networks S.L.U - All rights reserved
This information is subject to change without notice

5.3.28 RemoteControllerProhibit_command (Multistate Output Object Type)

It allows control over the indoor unit's mode.

Property Identifier	Property Datatype	Value	ASHRAE	IBOX
Object_Identifier	BACnetObjectIdentifier	(Multi-state Output, 5)	R	R
Object_Name	CharacterString	"RemoteControllerProhibit_command"	R	R
Object_Type	BACnetObjectType	MULTISTATE_OUTPUT (14)	R	R
Present_Value	Unsigned	1 ~ 8	W	W
Description	CharacterString	-	O	-
Device_Type	CharacterString	-	O	-
Status_Flags	BACnetStatusFlags	{FALSE, FALSE, FALSE, FALSE}	R	R
Event_State	BACnetEventState	STATE_NORMAL (0)	R	R
Reliability	BACnetReliability	NO_FAULT_DETECTED (0)	O	R
Out_Of_Service	BOOLEAN	FALSE	R	R
Number_Of_States	Unsigned	8	R	R
State_Text	BACnetArray[N] of CharacterString	*Check **Mode Command setting table** below*	O	R
Priority_Array	BACnetPriorityArray	BACnetPriorityArray	R	R
Relinquish_Default	Unsigned	1	R	R
Time_Delay	Unsigned	-	O	-
Notification_Class	Unsigned	-	O	-
Feedback_Value	Unsigned	-	O	-
Event_Enable	BACnetEventTransitionBits	-	O	-
Acked_Transitions	BACnetEventTransitionBits	-	O	-
Notify_Type	BACnetNotifyType	-	O	-
Event_Time_Stamps	BACnetArray[N] of BACnetTimeStamp	-	O	-
Profile_Name	CharacterString	-	O	-

Remote Controller Prohibit command

In the table below you will find the prohibition correspondence value.

Pesent_Value	Contents displayed in State_Text
1	`AllPermitted`
2	`OnOff`
3	`Mode`
4	`Mode, OnOff`
5	`SetPoint`
6	`SetPoint, OnOff`
7	`SetPoint, Mode`
8	`SetPoint, Mode, OnOff`

© HMS Industrial Networks S.L.U - All rights reserved
This information is subject to change without notice

5.3.29 RuntimeModeRestriction (Multistate Input Object Type)

It indicates the current error present in the AC system.

Property Identifier	Property Datatype	Value	ASHRAE	IBOX
Object_Identifier	BACnetObjectIdentifier	(Multi-state Input, 7)	R	R
Object_Name	CharacterString	"RuntimeModeRestriction"	R	R
Object_Type	BACnetObjectType	MULTISTATE_INPUT(13)	R	R
Present_Value	Unsigned	1 ~ 7	R	R
Description	CharacterString	-	O	-
Device_Type	CharacterString	-	O	-
Status_Flags	BACnetStatusFlags	{FALSE, FALSE/TRUE, FALSE, FALSE}	R	R
Event_State	BACnetEventState	STATE_NORMAL (0)	R	R
Reliability	BACnetReliability	NO_FAULT_DETECTED (0), UNRELIABLE_OTHER (7)	O	R
Out_Of_Service	BOOLEAN	FALSE	R	R
Number_Of_States	Unsigned	7	R	R
State_Text	BACnetArray[N] of CharacterString	*Check **Error Code table** below.*	O	R
Time_Delay	Unsigned	-	O	-
Notification_Class	Unsigned	-	O	-
Alarm_Values	List of Unsigned	-	O	-
Fault_Values	List of Unsigned	-	O	-
Event_Enable	BACnetEventTransitionBits	-	O	-
Acked_Transitions	BACnetEventTransitionBits	-	O	-
Notify_Type	BACnetNotifyType	-	O	-
Event_Time_Stamps	BACnetArray[N] of BACnetTimeStamp	-	O	-
Profile_Name	CharacterString	-	O	-

Runtime Mode Restriction

In the table below you will find the restriction correspondence value.

Pesent_Value	Contents displayed in State_Text
1	`None`
2	`Auto`
3	`Heat`
4	`Heat, Auto`
5	`Cool, Dry`
6	`Cool, Dry, Auto`
7	`Cool, Dry, Heat, Auto`

© HMS Industrial Networks S.L.U - All rights reserved
This information is subject to change without notice

6 Connections and switches

6.1 *Connect to the Remote Controller bus*

Disconnect the Panasonic system from Mains Power

Connect the interface to R1 R2 bus in any point of the bus. The R1 R2 bus is the bus that connects the AC indoor unit and the wired remote controller, is a two-wire bus connecting terminals R1 R2 of both. This R1 R2 connection has no specific polarity.

⚠ ***Important***: Do not modify the length of the cable supplied with the interface, it may affect to the correct operation of the interface

⚠ ***Important***: If a wired remote controller of the AC manufacturer is connected in the same bus, communication may shut down. In case this happens, please use the USB connector to power the device to overcome this situation.

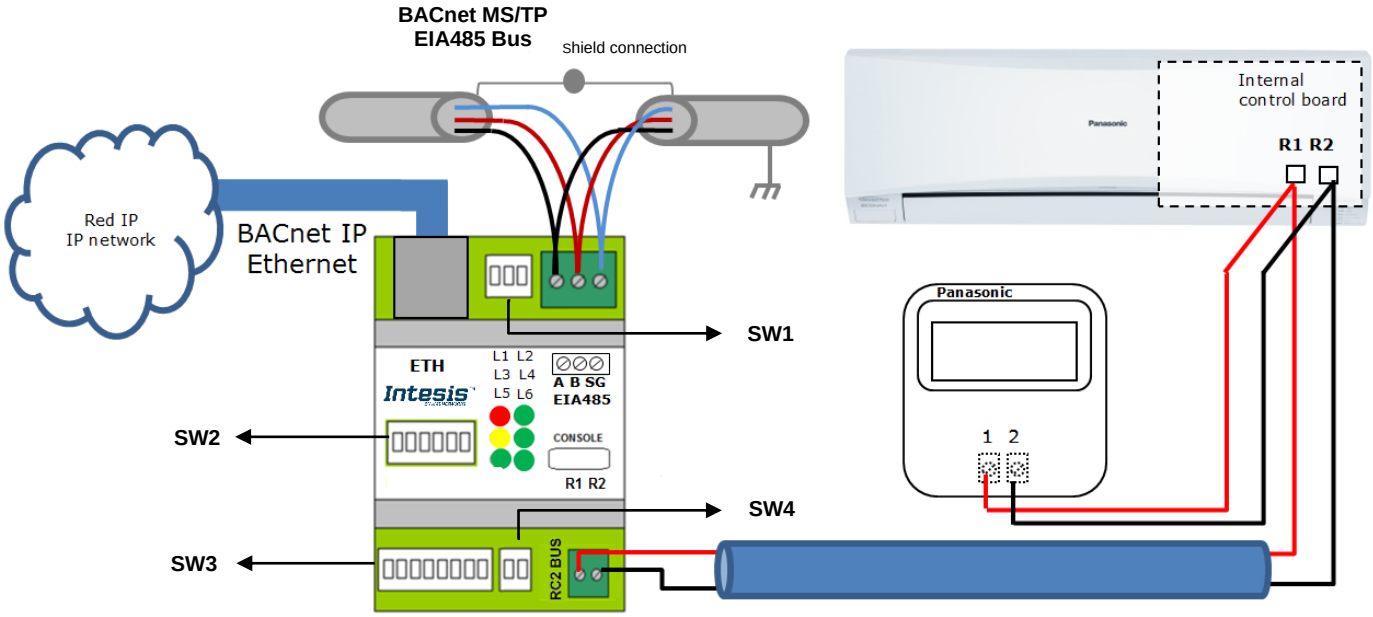

Figure 2.2 Connection diagram

Please, check the configuration for the AC unit to ensure proper control of the AC unit according to its specifications. Use **SW4** and **SW3** for that purpose.

SW3 - Celsius/Fahrenheit selection

Binary value $b_7...b_0$	Decimal value	Switches 1 2 3 4 5 6 7 8	Description
xxxx0xxx	0	x x x x ↓ x x x	Celsius degrees (default value)
xxxx1xxx	1	x x x x ↑ x x x	Fahrenheit degrees

SW4 – Header/Follower selection

Binary value $b_1...b_0$	Decimal value	*Switches* 1 2	MAC address
0x	0	↓ x	INBACPAN001R000 is follower in R1-R2 bus (default) (Wired remote controller needs to be set as header)
1x	1	↑ x	INBACPAN001R000 is header in R1-R2 bus (Wired remote controller needs to be set as header)
x0	0	x ↓	Not used (default)
x1	1	x ↑	Not used

⚠ ***Important***: Remember that switch changes only apply after an Intesis power cycle

© HMS Industrial Networks S.L.U - All rights reserved
This information is subject to change without notice

6.2 *Connect to BACnet MS/TP*

Connect the EIA485 bus wires to the plug-in terminal block (EIA485) of INBACPAN001R000; respect the polarity on this connection (A+ and B-).

Connect the ground signal to the plug-in terminal block (SG).

Respect the maximum distance of 1.200 meters for the bus, no loop or star topologies are allowed for EIA485 bus.

EIA-485 bus. Termination resistors and Fail-Safe Biasing mechanism

EIA-485 bus requires a 120Ω terminator resistor at each end of the bus to avoid signal reflections.

In order to prevent fail status detections by the receivers, which are *"listening"* to the bus, when all the transmitters' outputs are in three-state (high impedance), a fail-safe biasing mechanism is required. This mechanism provides a safe status (a correct voltage level) in the bus when all the transmitters' outputs are in three-state.

The INBACPAN001R000 gateway includes an on-board terminator resistor of 120Ω that can be connected to the EIA-485 bus by using DIP-switch **SW1**.

Some BACnet MS/TP EIA-485 Master devices can provide also internal 120Ω terminator resistor and/or fail-safe biasing. Check the technical documentation of the Master device connected to the EIA-485 network in each case.

SW1 settings

Binary value $b_2...b_0$	Decimal value	Switches 1 2 3	Description
0xx	**0**	↓ x x	EIA485 bus without termination resistor. The gateway is not at one end of the EIA485 bus (default value)
1xx	**1**	↑ x x	120 Ω termination resistor active. The gateway is at one end of the EIA485 bus
x00	**0**	x↓ ↓	No bus polarization
x11	**3**	x↑ ↑	Bus polarization active

Please, check as well configuration on **SW2** and **SW3** before connecting to BACnet MS/TP.

6.2.1 MS/TP MAC address switch configuration

MAC address can be configured using **SW2** DIP-Switch

Binary value $b_7...b_0$	Decimal value	*Switches* 1	2	3	4	5	6	7	8	MAC address
0000000x	0	↓	↓	↓	↓	↓	↓	↓	x	0
1000000x	1	↑	↓	↓	↓	↓	↓	↓	x	1
0100000x	2	↓	↑	↓	↓	↓	↓	↓	x	2
1100000x	3	↑	↑	↓	↓	↓	↓	↓	x	3
….	….	….								…
1011111x	125	↑	↓	↑	↑	↑	↑	↑	x	125
0111111x	126	↓	↑	↑	↑	↑	↑	↑	x	126
1111111x	127	↑	↑	↑	↑	↑	↑	↑	x	127

The MAC address selected my affect on the Device Instance. If the "Auto Device Instance" is used, keep in mind that the Device Instance will be build using the "Device Instance Base" + the address selected in SWP2 P1-P7. Please, check section 7.4 for more information.

© HMS Industrial Networks S.L.U - All rights reserved
This information is subject to change without notice

6.2.2 MS/TP activation and baudrate

Select the right baudrate for BACnet MS/TP communication using switch **SW3**.

Binary value $b_7...b_0$	Decimal value	Switches 1 2 3 4 5 6 7 8	Description
0xxxxxxx	**0**	↓ x x x x x x x	BACnet MS/TP active (default value)
1xxxxxxx	**1**	↑ x x x x x x x	BACnet IP active
x000xxxx	**0**	x ↓ ↓ ↓ x x x x	Autobaudrate (default value) *
x100xxxx	**1**	x ↑ ↓ ↓ x x x x	9600 bps
x010xxxx	**2**	x ↓ ↑ ↓ x x x x	192000 bps
x110xxxx	**3**	x ↑ ↑ ↓ x x x x	38400 bps
x001xxxx	**4**	x ↓ ↓ ↑ x x x x	57600 bps
x101xxxx	**5**	x ↑ ↓ ↑ x x x x	76800 bps
x011xxxx	**6**	x ↓ ↑ ↑ x x x x	115200 bps
x111xxxx	**7**	x ↑ ↑ ↑ x x x x	Autobaudrate *
xxxx0xxx	**0**	x x x x ↓ x x x	Celsius degrees (default value)
xxxx1xxx	**1**	x x x x ↑ x x x	Fahrenheit degrees

* Note: If Autobaudrate is selected, the INBACPAN001R000 will look for another BACnet MS/TP device with a fixed baudrate in order to match this value. Once detected, the baudrate will not be modified until a device reset is produced.

⚠ ***Important***: Remember that switch changes only apply after an Intesis power cycle

6.3 *Connect to BACnet IP*

Connect the RJ45 connector to the Ethernet connection (ETH) of INBACPAN001R000.

Respect same recommendations as per any other Ethernet communication network.

Remember to activate the IP interface through the **SW3** switch.

Binary value $b_7...b_0$	Decimal value	Switches 1 2 3 4 5 6 7 8	Description
0xxxxxxx	**0**	↓ x x x x x x x	BACnet MS/TP active (default value)
1xxxxxxx	**1**	↑ x x x x x x x	BACnet IP active

By default, the INBACPAN001R000 comes with a static IP address: **192.168.100.246**.

In order to change it, please use the configuration tool and select either DHCP or another static IP (recommended) that suits your integration project requirements. Check section 7.4 for more information.

6.3.1 BACnet Device Instance

If the “Auto Device Instance” is used, keep in mind that the Device Instance will be build using the “Device Instance Base” + the address selected in SWP2 P1-P7.

Binary value $b_7...b_0$	Decimal value	*Switches* 1 2 3 4 5 6 7 8	MAC address
0000000x	0	↓ ↓ ↓ ↓ ↓ ↓ ↓ x	0
1000000x	1	↑ ↓ ↓ ↓ ↓ ↓ ↓ x	1
0100000x	2	↓ ↑ ↓ ↓ ↓ ↓ ↓ x	2
1100000x	3	↑ ↑ ↓ ↓ ↓ ↓ ↓ x	3
….	….	**….**	…
1011111x	125	↑ ↓ ↑ ↑ ↑ ↑ ↑ x	125
0111111x	126	↓ ↑ ↑ ↑ ↑ ↑ ↑ x	126
1111111x	127	↑ ↑ ↑ ↑ ↑ ↑ ↑ x	127

⚠ ***Important***: Remember that switch changes only apply after an Intesis power cycle

© HMS Industrial Networks S.L.U - All rights reserved
This information is subject to change without notice

7 Set-up process and troubleshooting

7.1 *Pre-requisites*

In a BACnet MS/TP integration, it is necessary to have the BACnet MS/TP Master device operative and well connected to the BACnet MS/TP port of the INBACPAN001R000.

In a BACnet IP integration, it is necessary to have the BACnet IP client operative and well connected to the IP network and the INBACPAN001R000 connected to this same IP network through the ETH port.

Items supplied by HMS Networks for this integration are:

- Intesis INBACPAN001R000 interface with Panasonic AC external protocol firmware loaded.
- Specific connection cable to connect Panasonic AC unit with INBACPAN001R000 gateway.
- MiniUSB cable for console communication.
- Product documentation.

7.2 *Physical checking*

First point to look at to make sure that gateway is working properly is to check physical connections:

1.- Make sure that the supplied cable is correctly connected between the AC unit and the gateway. INBACPAN001R000 needs to be connected to the AC unit or externaly powered before starting the device configuration. Contact Intesis if you need to power your device without connecting it to the AC unit.

2.- Check that the AC unit is connected to mains.

3.- If using BACnet MS/TP, check the EIA485 connection from the gateway to the BACnet MS/TP. Remember to verify polarity and terminal resistors configuration. If using BACnet IP, check the IP network connections.

7.3 *LED status*

On start up, all leds blink once and then turn off. After that, depending on the type of connection (MS/TP or IP) and the processes carried out, LED status may change.

Please, check the table below for more information:

LED	Status	Description
L1 (red)	ON Steady	AC communication error
	Blinking	AC error
	Off	No errors present
L5 (green)	ON Steady	BACnet MS/TP link
	Blinking	Activity on the BACnet MS/TP bus
L6 (green)	ON Steady	Ethernet link
	Blinking	Activity on BACnet IP
L1+L4+L5	Blinking	Device in Bootloader mode
All	Blinking	Fatal Error
All	On Steady 1 sec	On start up (for testing purposes)

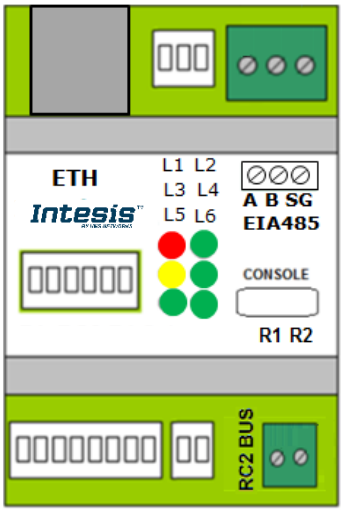

© HMS Industrial Networks S.L.U - All rights reserved
This information is subject to change without notice

7.4 *Occupancy*

Each indoor unit has its own occupancy signal. Remember that these signals needs to be feed by an external sensor which indicates if there is presense or not (occupancy). This signal is processed directly in the INBACPAN001R000.

When occupancy mode is active, according to current room temperature it will set the mode, setpoint and on/off, for example:

- Room Temperature > OCS: Setpoint = OCS, Mode = Cool, On/Off = On
- Room Temperature < OHS: Setpoint = OHS, Mode = Heat, On/Off = On
- OCS < Room Temperature > OHS: Setpoint = OCS/OHS depending on current mode (if Fan or Dry mode is active => no setpoint is sent), On/Off = On

When unoccupancy mode is active, according to current room temperature it will set the mode, setpoint and on/off, for example:

- Room Temperature > UCS: Setpoint = UCS, Mode = Cool, On/Off = On
- Room Temperature < UHS: Setpoint = UHS, Mode = Heat, On/Off = On
- UCS < Room Temperature > UHS: Setpoint = UCS/UHS depending on current mode (if Fan or Dry mode is active => no setpoint is sent), On/Off = On (if Unoccupancy Deadband Action is = 1)

These checks will be done each time the indoor unit occupancy status is changed, and if ***check continuously*** checkbox is checked, also each time the room temperature changes.

The configuration set on the occupany signals is applied from the very first moment the occupancy signal is enabled until the user changes the setpoint, mode or the On/Off signal, which disables occupancy functionality.

The minimum difference between Cool and Heat SetPoints must be 2ºC/4ºF.

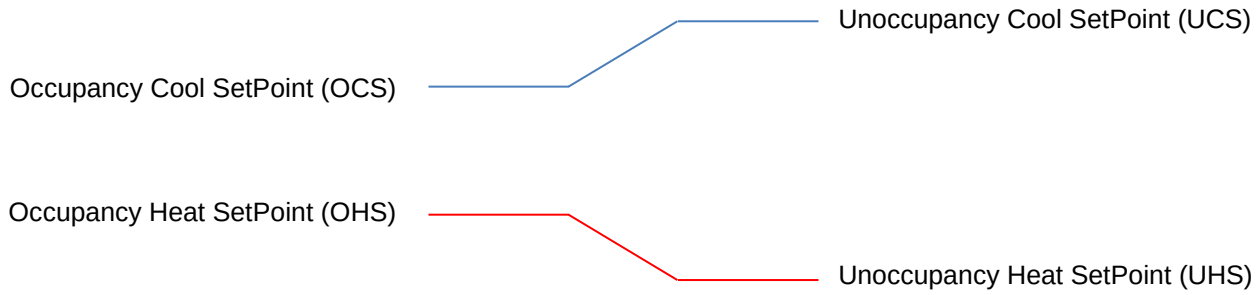

© HMS Industrial Networks S.L.U - All rights reserved
This information is subject to change without notice

7.5 *Configuration tool*

In order to check the status of the device, signals values and general configuration, the INBACPAN001R000 includes a configuration tool. This tool is accessible only through the Ethernet port, so keep in mind that you need to switch **SW3** P1 'ON'.

By default, the device comes with a static IP, so please check that you are in the same network domain in order to connect. The default IP is: **192.168.100.246**.

7.5.1 Home

Once you reach the page, remember to login with your user and password. To access the login site, click on "User" or use the drop-down menu on the top right corner for user selection.

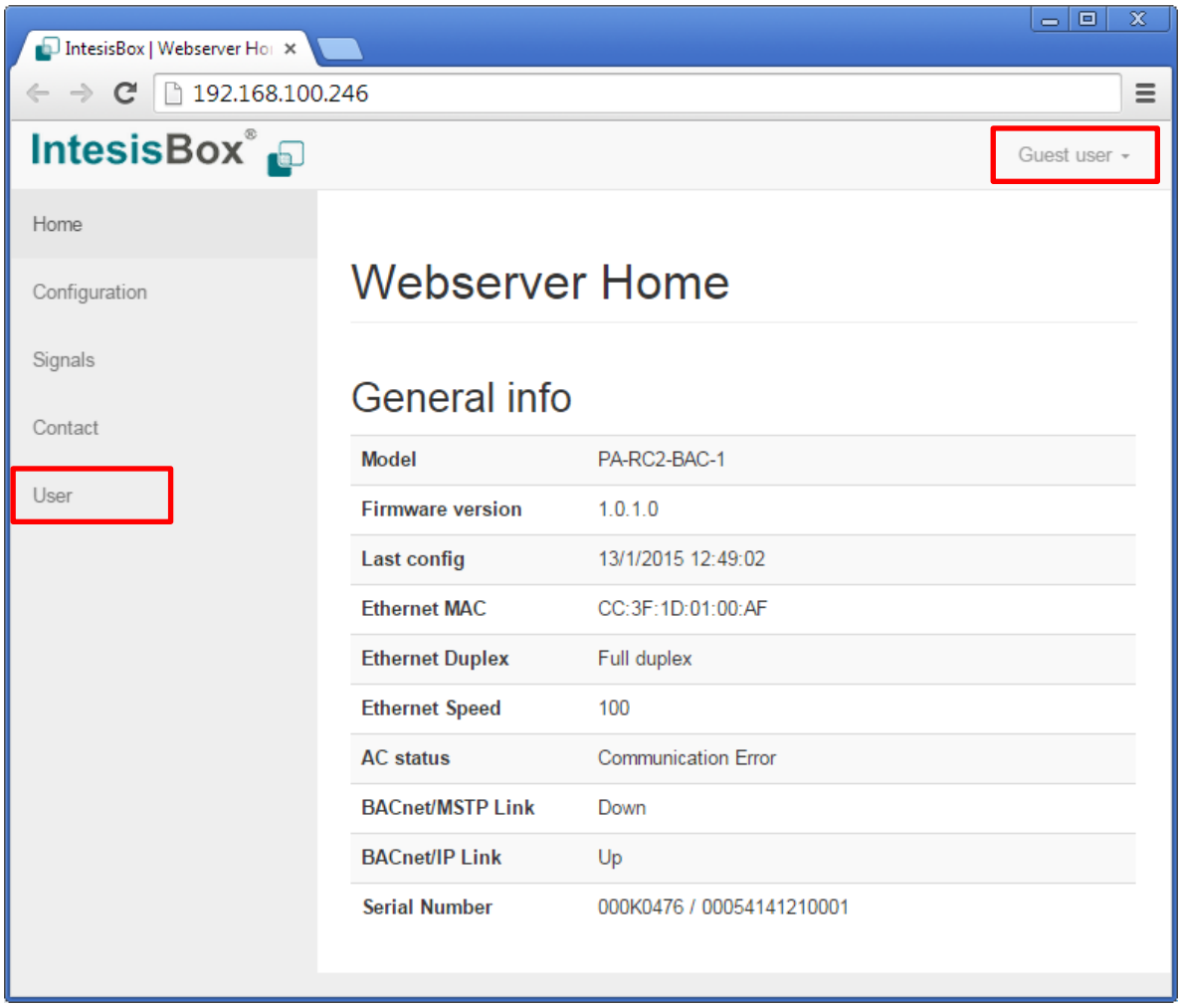

There are two access levels: ***admin*** and ***operator***. The default password value for each user is ***admin*** ➔ admin and ***operator*** ➔ operator.

Admin has total control on the device configuration, and it can control the AC unit from the web app itself. On the contrary, operator can only read information from the current configuration and can operate the AC. Priority used when using the operator mode is always set to 8.

IMPORTANT: Once configuration is done, we recommend changing the passwords to ensure access control on the gateway.

© HMS Industrial Networks S.L.U - All rights reserved
This information is subject to change without notice

7.5.2 Configuration

On the configuration section, general **BACnet settings**, specific **BACnet MS/TP** and **BACnetIP settings**, **IP seetings** and **AC settings** can be configured. Each type of parameter is grouped in different blocks.

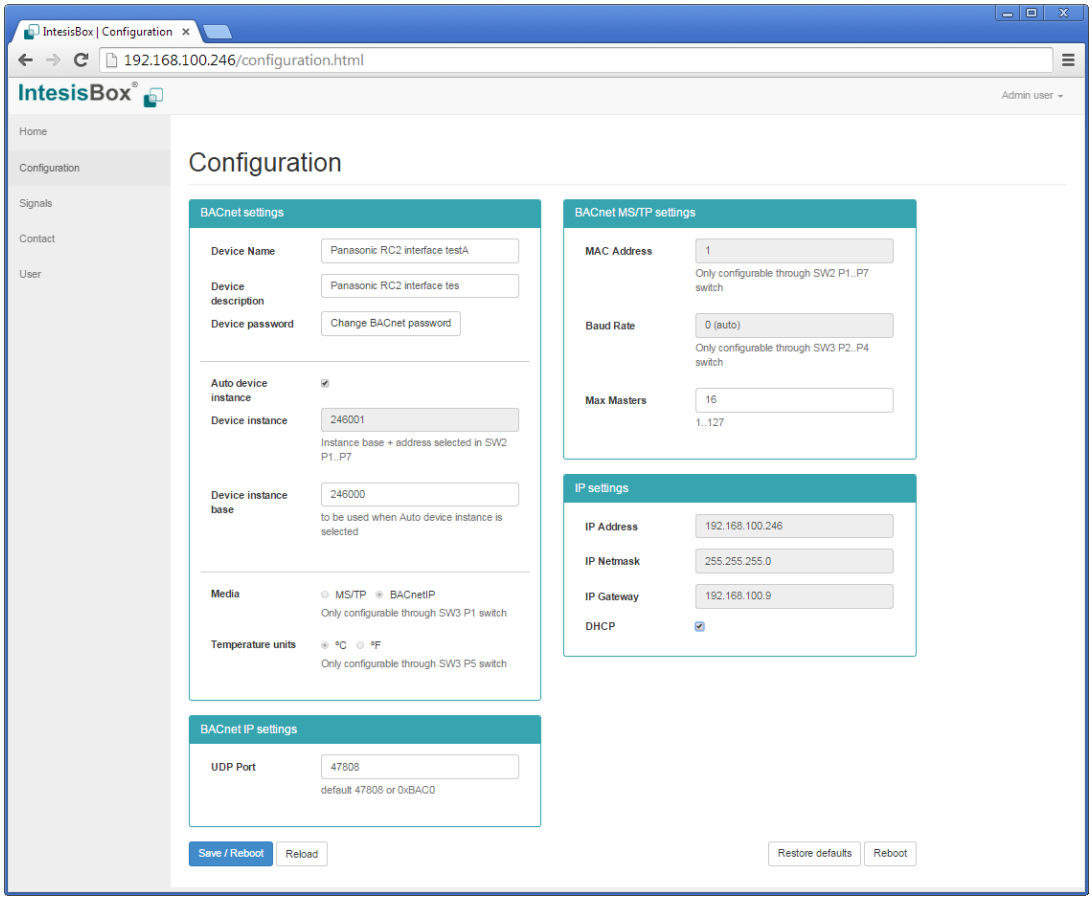

7.5.3 Signals

On this section a complete list of the available BACnet objects, their **type**, **Object Instance**, **priority** and current **value** is shown. Clinking on the "**Edit**" button, users will be able to command the system having feedback from both BACnet and AC system.

It also allows continuous monitoring of the current status of the variables. The refresh time for the AC information is shown using a progression bar in the top and the bottom of the signals list.

© HMS Industrial Networks S.L.U - All rights reserved
This information is subject to change without notice

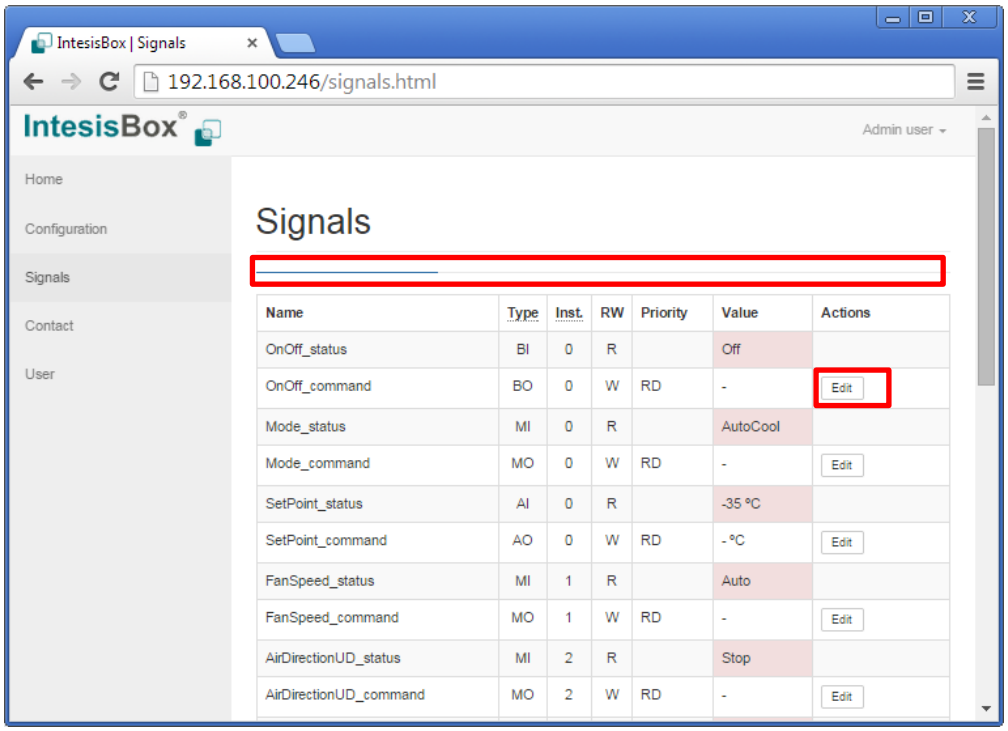

When you click on “Edit”, you will have the change of introducing a new **value** to be applied and also the **priority**.

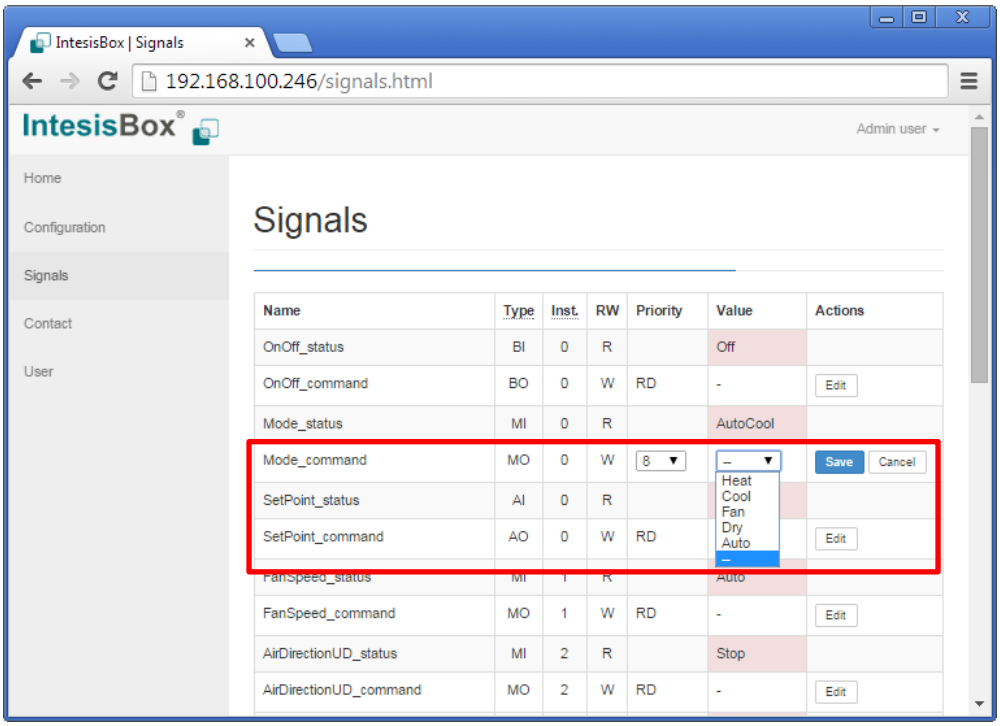

NOTE: If you want to relinquish the selected priority, please use the ‘--‘command.

8 AC Unit Types compatibility

Please, check compatibility list at to know which Panasonic units are compatible with our gateway.

https://www.intesis.com/docs/compatibilities/inxxxpan001rx00_compatibility

© HMS Industrial Networks S.L.U - All rights reserved
This information is subject to change without notice

9 Mechanical & electrical characteristics

Enclosure	Plastic, type PC (UL 94 V-0). Dimensions: 93mm x 53mm x 58mm. Weight: 85 g
Color	Light Grey. RAL 7035.
Terminal wiring (for power supply and low-voltage signals)	Per terminal: solid wires or stranded wires (twisted or with ferrule) 1 core: 0.5 … 2.5mm^2 2 cores: 0.5 … 1.5mm^2 3 cores: not permitted
Power Consumption	14 V_{DC} // 90 mA (typical)
Console Port	Mini USB port for console usage or additional power supply (Standard USB: 5V_{DC})
Mounting	Wall. DIN rail EN60715 TH35.
BACnet MS/TP port	1 x EIA485 Plug-in screw terminal block (2 poles + GND)
BACnet IP port	1 x Ethernet 100BT RJ45.
LED indicators	6 x Gateway/Communication status
Operational temperature	0°C to +40°C
Operational humidity	5% to 95%, non-condensing
Isolation Voltage	*4000 VDC (between AC unit and EIA-485)* *1000 VDC (between AC unit and USB)*
Protection	IP20 (IEC60529).
RoHS conformity	Compliant with RoHS directive (2002/95/CE).
Certifications	CE conformity to EMC directive (2004/108/EC) and Low-voltage directive (2006/95/EC) EN 61000-6-1 ;EN 61000-6-3; EN 60950-1; EN 50491-3 This device complies with part 15 of the FCC Rules. Operation is subject to the following two conditions: 1) This device may not cause harmful interference 2) This device must accept any interference received, including interference that may cause undesired operation.

10 Dimensions

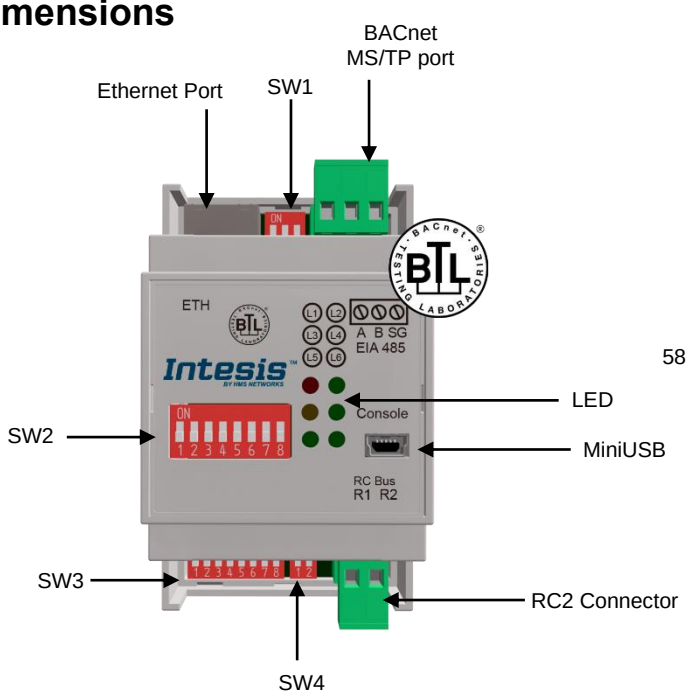

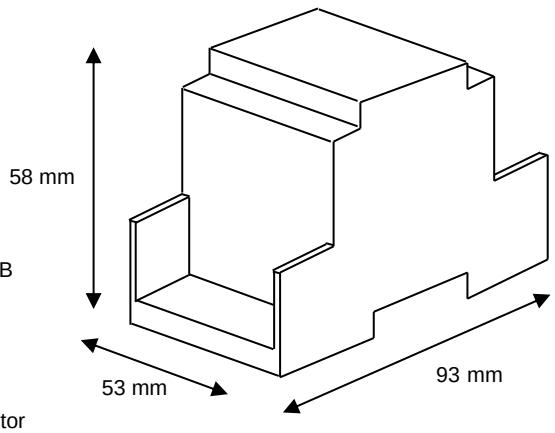

© HMS Industrial Networks S.L.U - All rights reserved
This information is subject to change without notice

11 Error codes

Below you can find a list of error codes from Panasonic air conditioning system.

ErrorCode	Error CodeM	Error in RC	Error Category	Error Description
0	N/A	N/A	INBACPAN001R000	No active error
01	A01	A01	GHP Engine Issues	GHP - Engine oil pressure fault
02	A02	A02		GHP - Engine oil level fault
03	A03	A03		GHP - Engine over speed
04	A04	A04		GHP - Engine under speed
05	A05	A05		GHP - Ignition power supply failure
06	A06	A06		GHP - Engine start up failure
07	A07	A07		GHP - Fuel gas valve failure
08	A08	A08		GHP - Engine stalled
09	A09	A09		GHP - Engine overload
0A	A10	A10		GHP - High exhaust gas temp
0B	A11	A11		GHP - Engine oil level failure
0C	A12	A12		GHP - Throttle actuator fault
0D	A13	A13		GHP - Fuel gas valve adjustment failure
0E	A14	A14		GHP - Engine oil pressure sensor fault
0F	A15	A15		GHP - Starter power output short circuit
10	A16	A16		GHP - Starter motor locked
11	A17	A17		GHP - Starter current (CT) coil failed
13	A19	A19		GHP - Wax Valve (3 Way) fault
14	A20	A20		GHP - Cooling water temp high
15	A21	A21		GHP - Cooling water level fault
16	A22	A22		GHP - Cooling water pump fault
17	A23	A23		GHP - Engine crank angle sensor failure
18	A24	A24		GHP - Engine cam angle sensor failure
19	A25	A25		GHP - Clutch fault
1A	A26	A26		GHP - Misfire
1B	A27	A27		GHP - Catalyst temperature fault
1C	A28	A28		GHP - Generator fault
1D	A29	A29		GHP - Converter fault
1E	A30	A30		GHP - Fuel gas pressure low
21	C01	C01		Duplicated setting of control address

© HMS Industrial Networks S.L.U - All rights reserved
This information is subject to change without notice

22	C02	C02	Central Controller Issues	Central control number of units mis-matched
23	C03	C03		Incorrect wiring of central control
24	C04	C04		Incorrect connection of central control
25	C05	C05		System Controller fault, error in transmitting comms signal, i/door or o/door unit not working, wiring fault
26	C06	C06		System Controller fault, error in receiving comms signal, i/door or o/door unit not working, wiring fault, CN1 not connected correctly
2C	C12	C12		Batch alarm by local controller
30	C16	C16		Transmission error from adaptor to unit
31	C17	C17		Reception error to adaptor from unit
32	C18	C18		Duplicate central address in adaptor
33	C19	C19		Duplicate adaptor address
34	C20	C20		Mix of PAC & GHP type units on adaptor
35	C21	C21		Memory fault in adaptor
36	C22	C22		Incorrect address setting in adaptor
37	C23	C23		Host terminal software failure
38	C24	C24		Host terminal hardware failure
39	C25	C25		Host terminal processing failure
3A	C26	C26		Host terminal communication failure
3C	C28	C28		Reception error of S-DDC from host terminal
3D	C29	C29		Initialization failure of S-DDC
3F	C31	C31		Configuration change detected by adaptor
41	E01	E01	Addressing and Communication Problems	Remote control detecting error from indoor unit, Address not set/Auto address failed. Check interconnecting wiring etc. Re-address system.
42	E02	E02		Remote detecting error from indoor unit,
43	E03	E03		Indoor unit detecting error from remote,
44	E04	E04		Indoor seeing error from outdoor. Qty of i/d units connected are less than qty set. Check; all i/d units are ON, reset turn off all units wait 5min power up
45	E05	E05		Indoor unit detecting error from outdoor unit, Error in sending comms signal
46	E06	E06		Outdoor unit detecting error from indoor unit, Error in receiving comms signal
47	E07	E07		Outdoor unit detecting error from indoor unit, Error in sending comms signal

© HMS Industrial Networks S.L.U - All rights reserved
This information is subject to change without notice

48	E08	E08		Incorrect setting indoor/controller, Indoor address duplicated
49	E09	E09		Incorrect setting indoor/controller, Remote address duplicated or IR wireless controller not disabled
4A	E10	E10		Indoor unit detecting error from 'option' plug, Error in sending comms signal
4B	E11	E11		Indoor unit detecting error from 'option' plug, Error in receiving comms signal
4C	E12	E12		Auto addressing failed, Auto address connector CN100 shorted during auto addressing
4D	E13	E13		Indoor unit failed to send signal to remote controller
4E	E14	E14		Setting Failure, Duplication of master indoor units
4F	E15	E15		Auto addressing failed, Number of indoor units connected are less than number set
50	E16	E16		Auto addressing failed, Number of indoor units connected are more than number set
51	E17	E17		Group control wiring error, Main indoor unit not sending signal for sub indoor units
52	E18	E18		Group control wiring error, Main indoor unit not receiving signal for sub indoor units
54	E20	E20		Auto addressing failed, No indoor units connected
58	E24	E24		Auto addressing failed, Error on sub outdoor unit
59	E25	E25		Auto addressing failed, Error on outdoor unit address setting
5A	E26	E26		Auto addressing failed, Quantity of main and sub outdoor units do not correspond to the number set on main outdoor unit P.C.B.
5D	E29	E29		Auto addressing failed, Sub outdoor unit not receiving comms for main outdoor unit
5F	E31	E31		Between units, Comms failure with MDC, does E31 remain after power is re-instated? If so replace PCB. & power PCB
61	F01	F01	Sensor Faults	Indoor Heat Exch inlet temp sensor failure (E1)
62	F02	F02		Indoor Heat Exch freeze temp sensor failure (E2)
63	F03	F03		Indoor Heat Exch outlet temp sensor failure (E3)
64	F04	F04		Outdoor Discharge temp sensor failure (TD) or (DISCH1)
65	F05	F05		Outdoor Discharge temp sensor failure (DISCH2)

© HMS Industrial Networks S.L.U - All rights reserved
This information is subject to change without notice

66	F06	F06		Outdoor Heat Exch temp sensor failure (C1) or (EXG1)
67	F07	F07		Outdoor Heat Exch temp sensor failure (C2) or (EXL1)
68	F08	F08		Outdoor Air temp sensor failure (TO)
6A	F10	F10		Indoor inlet temp sensor failure
6B	F11	F11		Indoor outlet temp sensor failure
6C	F12	F12		Outdoor Intake sensor failure (TS)
6D	F13	F13		GHP - Cooling water temperature sensor failure
70	F16	F16		Outdoor High pressure sensor failure
71	F17	F17		GHP - Cooling water temperature sensor fault
72	F18	F18		GHP - Exhaust gas temperature sensor fault
74	F20	F20		GHP Clutch coil temperature fault
77	F23	F23		Outdoor Heat Exch temp sensor failure (EXG2)
78	F24	F24		Outdoor Heat Exch temp sensor failure (EXL2)
7D	F29	F29		Indoor EEPROM error
7E	F30	F30		Clock Function (RTC) fault
7F	F31	F31		Outdoor EEPROM error
81	H01	H01	Compressor Issues	Compressor Fault, Over current (Comp1)
82	H02	H02		Compressor Fault, Locked rota current detected (Comp1)
83	H03	H03		Compressor Fault, No current detected (Comp1)
85	H05	H05		Compressor Fault, Discharge temp not detected (Comp1)
86	H06	H06		Compressor Fault, Low Pressure trip
87	H07	H07		Compressor Fault, Low oil level
88	H08	H08		Compressor Fault, Oil sensor Fault (Comp1)
8B	H11	H11		Compressor Fault, Over current (Comp2)
8C	H12	H12		Compressor Fault, Locked rota current detected (Comp2)
8D	H13	H13		Compressor Fault, No current detected (Comp2)
8F	H15	H15		Compressor Fault, Discharge temp not detected (Comp2)
95	H21	H21		Compressor Fault, Over current (Comp3)
96	H22	H22		Compressor Fault, Locked rota current detected (Comp3)
97	H23	H23		Compressor Fault, No current detected (Comp3)

© HMS Industrial Networks S.L.U - All rights reserved
This information is subject to change without notice

99	H25	H25		Compressor Fault, Discharge temp not detected (Comp3)
9B	H27	H27		Compressor Fault, Oil sensor fault (Comp2)
9C	H28	H28		Compressor Fault. Oil sensor (connection failure)
9F	H31	H31		Compressor Fault. IPM trip (IMP current on temperature)
C1	L01	L01	Incorrect Settings	Setting Error, Indoor unit group setting error
C2	L02	L02		Setting Error, Indoor/outdoor unit type/model miss-matched
C3	L03	L03		Duplication of main indoor unit address in group control
C4	L04	L04		Duplication of outdoor unit system address
C5	L05	L05		2 or more controllers have been set as 'priority' in one system - shown on controllers set as 'priority'
C6	L06	L06		2 or more controllers have been set as 'priority' in one system - shown on controllers not set as 'priority'
C7	L07	L07		Group wiring connected on and individual indoor unit
C8	L08	L08		Indoor unit address/group not set
C9	L09	L09		Indoor unit capacity code not set
CA	L10	L10		Outdoor unit capacity code not set
CB	L11	L11		Group control wiring incorrect
CD	L13	L13		Indoor unit type setting error, capacity
CF	L15	L15		Indoor unit paring fault
D0	L16	L16		Water heat exch unit setting failure
D1	L17	L17		Miss-match of outdoor unit with different refrigerant
D2	L18	L18		4-way valve failure
D3	L19	L19		Water heat exch unit duplicated address
D5	L21	L21		Gas type setup failure
D9	L25	L25		Indoor unit, hydrokit model, Unmatched remote controller
E1	P01	P01	Indoor Unit Problems	Indoor unit fault, Fan motor thermal overload
E2	P02	P02		Outdoor unit fault, Compressor motor thermal overload, over or under voltage
E3	P03	P03		Outdoor unit fault, Compressor discharge temperature too high (Comp1) over 111 ºC. Low on ref gas, exp valve, pipework damage.
E4	P04	P04		Outdoor unit fault, High pressure trip
E5	P05	P05		Outdoor unit fault, Open phase on power supply. Check power on each phase, inverter pcb, control pcb

© HMS Industrial Networks S.L.U - All rights reserved
This information is subject to change without notice

E7	P07	P07		Indoor unit, hydrokit model, Abnormal internal heater overload
E9	P09	P09		Indoor unit fault, air-to-air unit: Ceiling panel incorrectly wired, hydrokit model: Abnormal water flow
EA	P10	P10		Indoor unit fault, Condensate float switch opened
EB	P11	P11		Air-to-water indoor unit low temp (frost protection) fault
EC	P12	P12		Indoor unit fault, air-to-air unit: Fan DC motor fault, hydrokit model: Abnormal water pump speed
EE	P14	P14		Input from leak detector (If fitted)
EF	P15	P15		Refrigerant loss, high discharge temp and EEV wide open and low compressor current draw.
F0	P16	P16		Outdoor unit fault, Open phase on compressor power supply
F1	P17	P17		Outdoor unit fault, Compressor discharge temperature too high (Comp2) over 111 degC. Low on ref gas, exp valve, pipework damage.
F2	P18	P18		Outdoor unit fault, By-pass valve failure
F3	P19	P19		Outdoor unit fault, 4 way valve failure, i/door temp rises in cooling or fills in heating. Check wiring, coil, pcb output, valve operation.
F4	P20	P20		Ref gas, high temp/pressure fault, heat exch temp high C2, 55-60 degC, cooling over-load, sensor fault.
F6	P22	P22		Outdoor unit fan motor fault, fan blade jammed, check connections, does fan turn freely, motor resistance 30-40ohm on each pair, no fan fault, yes pcb fault.
F7	P23	P23		Air-to-water interlock warning, within 30 seconds after the water pump start command, the interlock does not turn ON or the interlock turns OFF during water pump operation (interlock signal by flow switch and/or differential pressure switch, depending on the model)
FA	P26	P26		Outdoor unit fault, Compressor overcurrent - check winding resistance, Inverter failure - check internal resistance term HIC + & - to UVW 200-300Kohm or more
FC	P29	P29		Outdoor unit fault, Inverter circuit fault - Motor-current Detection Circuit (MDC) fault, check comp windings, sensors C1 & TS, if ok possible pcb failure.
FD	P30	P30		Indoor unit fault, System controller detected fault on sub indoor unit
FF	P31	P31		Simultaneous operation multi control fault, Group controller fault
65535 (-1)	N/A	N/A	INBACPAN001R000	Error in the communication of INBACPAN001R000 device with the AC unit

© HMS Industrial Networks S.L.U - All rights reserved
This information is subject to change without notice

In case you detect an error code not listed, contact your nearest Panasonic technical support service for more information on the error meaning.

© HMS Industrial Networks S.L.U - All rights reserved
This information is subject to change without notice