BACnet MS/TP Server

Panasonic Air Conditioning

Compatible with ECOi and PACi line air conditioners commercialized by Panasonic

USER MANUAL

Issue date: 09/2024 v1.3 ENGLISH

14 rue Edouard Petit
42000 St-Etienne

Tel : +33 477 92 03 56
Email : contact@rg2i.com
www.rg2i.com

Important User Information

Disclaimer

The information in this document is for informational purposes only. Please inform HMS Industrial Networks of any inaccuracies or omissions found in this document. HMS Industrial Networks disclaims any responsibility or liability for any errors that may appear in this document.

HMS Industrial Networks reserves the right to modify its products in line with its policy of continuous product development. The information in this document shall therefore not be construed as a commitment on the part of HMS Industrial Networks and is subject to change without notice. HMS Industrial Networks makes no commitment to update or keep current the information in this document.

The data, examples and illustrations found in this document are included for illustrative purposes and are only intended to help improve understanding of the functionality and handling of the product. In view of the wide range of possible applications of the product, and because of the many variables and requirements associated with any particular implementation, HMS Industrial Networks cannot assume responsibility or liability for actual use based on the data, examples or illustrations included in this document nor for any damages incurred during installation of the product. Those responsible for the use of the product must acquire sufficient knowledge in order to ensure that the product is used correctly in their specific application and that the application meets all performance and safety requirements including any applicable laws, regulations, codes and standards. Further, HMS Industrial Networks will under no circumstances assume liability or responsibility for any problems that may arise as a result from the use of undocumented features or functional side effects found outside the documented scope of the product. The effects caused by any direct or indirect use of such aspects of the product are undefined and may include e.g. compatibility issues and stability issues.

© HMS Industrial Networks S.L.U - All rights reserved
This information is subject to change without notice

Gateway for the integration of a Panasonic air conditioning unit in BACnet MSTP enabled monitoring and control systems.

Compatible with ECOi and PACi line air conditioners commercialized by Panasonic.

ORDER CODE	LEGACY ORDER CODE
INBACPAN001R100	PA-RC2-BAC-1L

© HMS Industrial Networks S.L.U - All rights reserved
This information is subject to change without notice

INDEX

1 Description 7
1.1 Introduction 7
1.2 Functionality 8
1.3 Capacity of Intesis 8
1.4 Quick Setup 8
2 Protocol Implementation Conformance Statement 9
2.1 BACnet Standardized Device Profile (Annex L): 9
2.2 Segmentation Capability: 9
2.3 Data Link Layer Options: 9
2.4 Device Address Binding: 10
2.5 Networking Options: 10
2.6 Character Sets Supported 10
2.7 Gateway 10
3 BACnet Interoperability Building Blocks Supported (BIBBs) 11
3.1 Data Sharing BIBBs 11
3.2 Alarm and Event Management BIBBs 11
3.3 Scheduling BIBBs 12
3.4 Trending BIBBs 12
3.5 Network Management BIBBs 12
3.6 Device Management BIBBs 13
4 Service Types 14
5 Objects 15
5.1 Supported Object Types 15
5.2 Member objects 17
5.2.1 Type: Gateway 17
5.2.2 Type: Indoor Unit 17
5.3 Objects and properties 19
5.3.1 Panasonic AC Gateway (Device Object Type) 19
5.3.2 OnOff_status (Binary Input Object Type) 21
5.3.3 OnOff_command (Binary Output Object Type) 22
5.3.4 Mode_status (Multistate Input Object Type) 23
5.3.5 Mode_command (Multistate Output Object Type) 24
5.3.6 Setpoint_status (Analog Input Object Type) 25
5.3.7 Setpoint_command (Analog Output Object Type) 26
5.3.8 FanSpeed_status (Multistate Input Object Type) 27
5.3.9 FanSpeed_command (Multistate Output Object Type) 28
5.3.10 AirDirectionUD_status (Multistate Input Object Type) 29
5.3.11 AirDirectionUD_command (Multistate Output Object Type) 30
5.3.12 RoomTemperature_status (Analog Input Object Type) 31
5.3.13 RoomTemperature_command (Analog Output Object Type) 32

© HMS Industrial Networks S.L.U - All rights reserved
This information is subject to change without notice

5.3.14 ErrorCode (Analog Input Object Type) 33
5.3.15 ErrorCodeM (Multistate Input Object Type) 34
5.3.16 ErrorActive (Binary Input Object Type) 37
5.3.17 Error_Address (Analog Input Object Type) 38
5.3.18 OnTimeCounter (Analog Value Object Type) 39
5.3.19 FilterSign (Binary Input Object Type) 40
5.3.20 FilterReset (Binary Output Object Type) 41
5.3.21 Occupancy (Multistate Value Object Type) 42
5.3.22 OccupiedCoolSetPoint (Analog Value Object Type) 43
5.3.23 OccupiedHeatSetPoint (Analog Value Object Type) 44
5.3.24 UnoccupiedCoolSetPoint (Analog Value Object Type) 45
5.3.25 UnoccupiedHeatSetPoint (Analog Value Object Type) 46
5.3.26 OccupancyContinuousCheck (Binary Value Object Type) 47
5.3.27 UnoccupiedDeadbandAction (Binary Value Object Type) 48
5.3.28 Runtime Mode Restriction (Multistate Input Object Type) 49
5.3.29 Outdoor Demand Rate (Multistate Input Object Type) 50
5.3.30 Outdoor Demand Rate_command (Multistate Output Object Type) 51
5.3.31 OutdoorDemandRateValue_status (Analog Input Object Type) 52
5.3.32 OutdooorDemandRateValue_command (Analog Output Object Type) 53
5.3.33 LockRemoteControlAll_status (Binary Input Object Type) 54
5.3.34 LockRemoteControlAll_command (Binary Output Object Type) 55
5.3.35 LockRemoteControlOnOff_status (Binary Input Object Type) 56
5.3.36 LockRemoteControlOnOff_command (Binary Output Object Type) 57
5.3.37 LockRemoteControlMode_status (Binary Input Object Type) 58
5.3.38 LockRemoteControlMode_command (Binary Output Object Type) 59
5.3.39 LockRemoteControlSetPoint_status (Binary Input Object Type) 60
5.3.40 LockRemoteControlSetPoint_command (Binary Output Object Type) 61
5.3.41 LockRemoteControlFanSpeed_status (Binary Input Object Type) 62
5.3.42 LockRemoteControlFanSpeed_command (Binary Output Object Type) 63
5.3.43 LockRemoteControlVanesUD_status (Binary Input Object Type) 64
5.3.44 LockRemoteControlVanesUD_command (Binary Output Object Type) 65
5.3.45 DIP_SW_S1_status (Analog Input Object Type) 66
5.3.46 DIP_SW_S2_status (Analog Input Object Type) 67
5.3.47 SerialNumber (Analog Input Object Type) 68
5.4 Considerations on Temperature Objects 69
5.4.1 INBACPAN001R100 set as a **header**: 69
5.4.2 INBACPAN001R100 set as a **follower**: 69
6 Connections and switches 71
6.1 Connect to the Remote Controller bus 71
6.2 Connect to BACnet MS/TP 72
6.2.1 MS/TP MAC address switch configuration 72

© HMS Industrial Networks S.L.U - All rights reserved
This information is subject to change without notice

6.2.2 BACnet MS/TP baudrate 73
7 Set-up process and troubleshooting 74
7.1 Pre-requisites 74
7.2 Physical checking 74
7.3 LED status 74
7.4 Occupancy 75
8 Restore factory Settings 76
8.1 Restore factory Settings 76
9 AC Unit Types compatibility 77
10 Mechanical & electrical characteristics 78
11 Error codes 79

© HMS Industrial Networks S.L.U - All rights reserved
This information is subject to change without notice

1 Description

1.1 Introduction

This document describes the integration of Panasonic air conditioning systems into BACnet MS/TP compatible devices and systems using gateway *INBACPAN001R100.*

The aim of this integration is to monitor and control your Panasonic air conditioning system, remotely, from your Control Center using any commercial SCADA or monitoring software that includes a BACnet driver or connect it to other BACnet devices to do any automation. To do it so, Intesis allows BACnet communication allowing polling or subscription requests (COV).

Intesis makes available the Panasonic air conditioning system indoor units through independent BACnet objects.

Abstraction of Panasonic air conditioning system properties and functionalities as fixed BACnet Objects. Intesis allows fixed BACnet object IDs mapping. Simple configuration is needed: just select the appropriate communication parameters (MAC address, baud rate…).

This document assumes that the user is familiar with BACnet and Panasonic technologies and their technical terms.

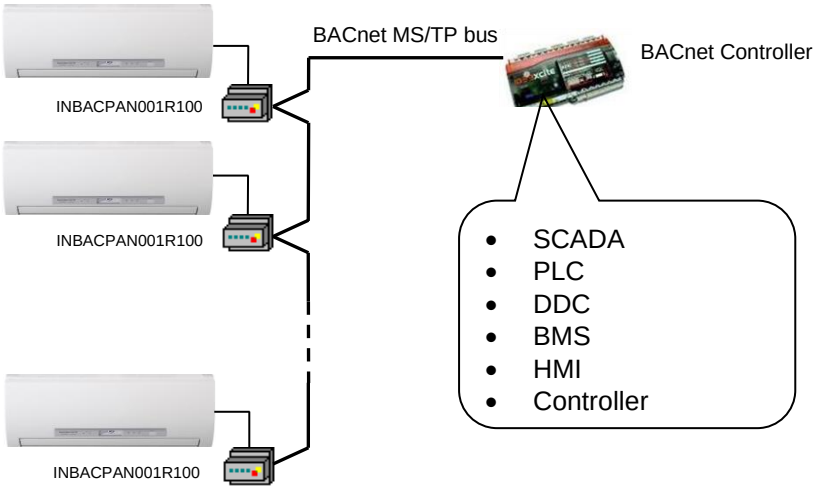

BACnet MS/TP installation sketch

© HMS Industrial Networks S.L.U - All rights reserved
This information is subject to change without notice

1.2 Functionality

Intesis continuously read the Panasonic AC unit and keeps the updated status of all objects in its memory, ready to be served when requested from the BACnet side.

The role of Intesis consists in associate the elements of the Panasonic AC unit with BACnet objects.

The control of the indoor units through the INBACPAN001R100 is permitted, so commands toward the Panasonic AC unit are permitted too.

The indoor unit is offered in a set of BACnet objects and extra functionality.

1.3 Capacity of Intesis

Intesis is capable of integrate one single Panasonic AC unit and its associated elements.

Element	Max.	Notes
Number of indoor units	1	Number of indoor units that can be controlled through Intesis
Number of Objects	46	Number of Panasonic AC signals available as objects into Intesis.

1.4 Quick Setup

1. Install Intesis in the desired installation site (DIN rail mounting inside a metallic industrial cabinet connected to ground is recommended).
2. Connect the communication cables. Details in section 6 CONNECTIONS AND SWITCHES.
3. Check the BACnet objects list for its integration to your BACnet project. Details in section 5.3 OBJECTS AND PROPERTIES.
4. Check if there is communication between BACnet and AC system through device LED. Details in section 7.3 LED STATUS.
5. The Intesis is ready to be used in your system.

© HMS Industrial Networks S.L.U - All rights reserved
This information is subject to change without notice

2 Protocol Implementation Conformance Statement

BACnet Protocol Implementation Conformance Statement (PICS)

Date: *2015-04-01*
Vendor Name: *HMS Industrial Networks S.L.U*
Product Name: *INBACPAN001R100*
Product Model Number: *INBACPAN001R100*
Application Software Version: *1.0*
Firmware Revision: *1.0.0.0*
BACnet Protocol Revision: *12*

Product Description:

Panasonic ECOi and PACi air conditioning systems – BACnet MS/TP

Abstraction of Panasonic air conditioning system properties and functionalities as BACnet Objects.

2.1 BACnet Standardized Device Profile (Annex L):

☐ BACnet Operator Workstation (B-OWS)

☐ BACnet Building Controller (B-BC)

☐ BACnet Advanced Application Controller (B-AAC)

☒ BACnet Application Specific Controller (B-ASC)

☐ BACnet Smart Sensor (B-SS)

☐ BACnet Smart Actuator (B-SA)

Additional BACnet Interoperability Building Blocks Supported (Annex K):
Reference of BIBBs List

2.2 Segmentation Capability:

Segmented request supported	☐ No	☒ Yes	Window Size *16*
Segmented responses supported	☐ No	☒ Yes	Window Size *16*

2.3 Data Link Layer Options:

☐ BACnet IP, (Annex J)
☐ BACnet IP, (Annex J), Foreign Device
☐ ISO 8802-3, Ethernet (Clause 7)
☐ ANSI/ATA 878.1, 2.5 Mb. ARCNET (Clause 8)
☐ ANSI/ATA 878.1, RS-485 ARCNET (Clause 8), baud rate(s) ____
☒ MS/TP master (Clause 9), baud rate(s): 9600, 19200, 38400, 76800
☐ MS/TP slave (Clause 9), baud rate(s):
☐ Point-To-Point, EIA 232 (Clause 10), baud rate(s):
☐ Point-To-Point, modem, (Clause 10), baud rate(s):
☐ LonTalk, (Clause 11), medium: _____
☐ Other:

© HMS Industrial Networks S.L.U - All rights reserved
This information is subject to change without notice

2.4 Device Address Binding:

Is static device binding supported? (This is currently necessary for two-way communication with MS/TP slaves and certain other devices.) ☐ Yes ☒ No

2.5 Networking Options:

☐ Router, Clause 6 - List all routing configurations, e.g., ARCNET-Ethernet, Ethernet-MS/TP, etc.
☐ Annex H, BACnet Tunneling Router over IP
☐ BACnet/IP Broadcast Management Device (BBMD)
Does the BBMD support registrations by Foreign Devices? ☐ Yes ☐ No

2.6 Character Sets Supported

Indicating support for multiple character sets does not imply that they can all be supported simultaneously.

☒ ANSI X3.4
☐ IBM™/Microsoft™ DBCS
☐ JIS C 6226
☐ ISO 10646 (UCS-4)
☐ ISO 10646 (UCS-2)
☐ ISO 8859-1

2.7 Gateway

If this product is a communication gateway, describe the types of non-BACnet equipment/network(s) that the gateway supports:

Panasonic Air Conditioning Units compatible with ECOi and PACi lines air conditioners.

© HMS Industrial Networks S.L.U - All rights reserved
This information is subject to change without notice

3 BACnet Interoperability Building Blocks Supported (BIBBs)

3.1 Data Sharing BIBBs

BIBB Type		Active	BACnet Service	Initiate	Execute
DS-RP-A	Data Sharing-ReadProperty–A	☐	ReadProperty	☒	☐
DS-RP-B	Data Sharing-ReadProperty–B	☒	ReadProperty	☐	☒
DS-RPM-A	Data Sharing-ReadPropertyMultiple–A	☐	ReadPropertyMultiple	☒	☐
DS-RPM-B	Data Sharing-ReadPropertyMultiple–B	☒	ReadPropertyMultiple	☐	☒
DS-RPC-A	Data Sharing-ReadPropertyConditiona–A	☐	ReadPropertyConditional	☒	☐
DS-RPC-B	Data Sharing-ReadPropertyConditional–B	☐	ReadPropertyConditional	☐	☒
DS-WP-A	Data Sharing-WriteProperty–A	☐	WriteProperty	☒	☐
DS-WP-B	Data Sharing-WriteProperty–B	☒	WriteProperty	☐	☒
DS-WPM-A	Data Sharing-WritePropertyMultiple–A	☐	WritePropertyMultiple	☒	☐
DS-WPM-B	Data Sharing-WritePropertyMultiple–B	☒	WritePropertyMultiple	☐	☒
DS-COV-A	Data Sharing-COV–A	☐	SubscribeCOV	☒	☐
		☐	ConfirmedCOVNotification	☐	☒
		☐	UnconfirmedCOVNotification	☐	☒
DS-COV-B	Data Sharing-COV–B	☒	SubscribeCOV	☐	☒
		☒	ConfirmedCOVNotification	☒	☐
		☒	UnconfirmedCOVNotification	☒	☐
DS-COVP-A	Data Sharing-COVP–A	☐	SubscribeCOV	☒	☐
		☐	ConfirmedCOVNotification	☐	☒
		☐	UnconfirmedCOVNotification	☐	☒
DS-COVP-B	Data Sharing-COVP–B	☐	SubscribeCOV	☐	☒
		☐	ConfirmedCOVNotification	☒	☐
		☐	UnconfirmedCOVNotification	☒	☐
DS-COVU-A	Data Sharing-COV-Unsolicited–A	☐	UncofirmedCOVNotification	☐	☒
DS-COVU-B	Data Sharing-COV-Unsolicited-B	☐	UncofirmedCOVNotification	☒	☐

3.2 Alarm and Event Management BIBBs

BIBB Type		Active	BACnet Service	Initiate	Execute
AE-N-A	Alarm and Event-Notification–A	☐	ConfirmedEventNotification	☐	☒
		☐	UnconfirmedEventNotification	☐	☒
AE-N-I-B	Alarm and Event-Notification Internal–B	☐	ConfirmedEventNotification	☒	☐
		☐	UnconfirmedEventNotification	☒	☐
AE-N-E-B	Alarm and Event-Notification External–B	☐	ConfirmedEventNotification	☒	☐
		☐	UnconfirmedEventNotification	☒	☐
AE-ACK-A	Alarm and Event-ACK–A	☐	AcknowledgeAlarm	☒	☐
AE-ACK-B	Alarm and Event-ACK–B	☐	AcknowledgeAlarm	☐	☒
AE-ASUM-A	Alarm and Event-Summary–A	☐	GetAlarmSummary	☒	☐
AE-ASUM-B	Alarm and Event-Summary–B	☐	GetAlarmSummary	☐	☒
AE-ESUM-A	Event-Summary–A	☐	GetEnrollmentSummary	☒	☐
AE-ESUM-B	Event-Summary–B	☐	GetEnrollmentSummary	☐	☒
AE-INFO-A	Alarm and Event-Information–A	☐	GetEventInformation	☒	☐
AE-INFO-B	Alarm and Event-Information–B	☐	GetEventInformation	☐	☒
AE-LS-A	Alarm and Event-LifeSafety–A	☐	LifeSafetyOperation	☒	☐
AE-LS-B	Alarm and Event-LifeSafety–B	☐	LifeSafetyOperation	☐	☒

© HMS Industrial Networks S.L.U - All rights reserved
This information is subject to change without notice

3.3 Scheduling BIBBs

BIBB Type		Active	BACnet Service	Initiate	Execute
SCHED-A	Scheduling–A *(must support DS-RP-A and DS-WP-A)*	☐			
		☐			
SCHED-I-B	Scheduling-Internal–B *(shall support DS-RP-B and DS-WP-B)* *(shall also support ether DM-TS-B or DS-UTC-B)*	☐			
		☐			
SCHED-E-B	Scheduling-External–B *(shall support SCHED-I-B and DS-WP-A)*	☐			
		☐			
T-VMT-A	Trending - Viewing and Modifying Trends–A	☐	ReadRange	☐	☒
T-VMT-I-B	Trending - Viewing and Modifying Trends Inernal–B	☐	ReadRange	☐	☒
T-VMT-E-B	Trending - Viewing and Modifying Trends External–B	☐	ReadRange	☐	☒
T-ATR-A	Trending - Automated Trend Retrieval–A	☐	ConfirmedEventNotification	☐	☒
		☐	ReadRange	☒	☐
T-ATR-B	Trending - Automated Trend Retrieval–B	☐	ConfirmedEventNotification	☒	☐
		☐	ReadRange	☐	☒

3.4 Trending BIBBs

BIBB Type		Active	BACnet Service	Initiate	Execute
T-VMT-A	Trending - Viewing and Modifying Trends–A	☐	ReadRange	☒	☐
T-VMT-I-B	Trending - Viewing and Modifying Trends Inernal–B	☐	ReadRange	☐	☒
T-VMT-E-B	Trending - Viewing and Modifying Trends External–B	☐	ReadRange	☐	☒
T-ATR-A	Trending - Automated Trend Retrieval–A	☐	ConfirmedEventNotification	☐	☒
		☐	ReadRange	☒	☐
T-ATR-B	Trending - Automated Trend Retrieval–B	☐	ConfirmedEventNotification	☒	☐
		☐	ReadRange	☐	☒

3.5 Network Management BIBBs

BIBB Type		Active	BACnet Service	Initiate	Execute
NM-CE-A	Network Management - Connection Establishment–A	☐	Establish-Connection-To-Network	☒	☐
		☐	Disconnect-Connection-To-Network	☒	☐
NM-CE-B	Network Management - Connection Establishment– B	☐	Establish-Connection-To-Network	☐	☒
		☐	Disconnect-Connection-To-Network	☐	☒
NM-RC-A	Network Management - Router Configuration–A	☐	Who-Is-Router-To-Network	☒	☐
		☐	I-Am-Router-To-Network	☐	☒
		☐	I-Could-Be-Router-To-Network	☐	☒
		☐	Initialize-Routing-Table	☒	☐
		☐	Initialize-Routing-Table-Ack	☐	☒
NM-RC-B	Network Management - Router Configuration–B	☐	Who-Is-Router-To-Network	☒	☒
		☐	I-Am-Router-To-Network	☒	☒
		☐	Initialize-Routing-Table	☐	☒
		☐	Initialize-Routing-Table-Ack	☒	☐

© HMS Industrial Networks S.L.U - All rights reserved
This information is subject to change without notice

3.6 Device Management BIBBs

BIBB Type		Active	BACnet Service	Initiate	Execute
DM-DDB-A	Device Management - Dynamic Device Binding–A	☐	Who-Is	☒	☐
		☐	I-Am	☐	☒
DM-DDB-B	Device Management - Dynamic Device Binding–B	☒	Who-Is	☐	☒
		☒	I-Am	☒	☐
DM-DOB-A	Device Management - Dynamic Object Binding–A	☐	Who-Has	☒	☐
		☐	I-Have	☐	☒
DM-DOB-B	Device Management - Dynamic Object Binding–B	☒	Who-Has	☐	☒
		☒	I-Have	☒	☐
DM-DCC-A	Device Management - DeviceCommunicationControl–A	☐	DeviceCommunicationControl	☒	☐
DM-DCC-B	Device Management - DeviceCommunicationControl–B	☒	DeviceCommunicationControl	☐	☒
DM-PT-A	Device Management - PrivateTransfer–A	☐	ConfirmedPrivateTransfer	☒	☐
		☐	UnconfirmedPrivateTransfer	☒	☐
DM-PT-B	Device Management - PrivateTransfer–B	☐	ConfirmedPrivateTransfer	☐	☒
		☐	UnconfirmedPrivateTransfer	☐	☒
DM-TM-A	Device Management - Text Message–A	☐	ConfirmedTextMessage	☒	☐
		☐	UnconfirmedTextMessage	☒	☐
DM-TM-B	Device Management - Text Message–B	☐	ConfirmedTextMessage	☐	☒
		☐	UnconfirmedTextMessage	☐	☒
DM-TS-A	Device Management - TimeSynchronization–A	☐	TimeSynchronization	☒	☐
DM-TS-B	Device Management - TimeSynchronization–B	☐	TimeSynchronization	☐	☒
DM-UTC-A	Device Management - UTCTimeSynchronization–A	☐	UTCTimeSynchronization	☒	☐
DM-UTC-B	Device Management - UTCTimeSynchronization–B	☐	UTCTimeSynchronization	☐	☒
DM-RD-A	Device Management - ReinitializeDevice–A	☐	ReinitializeDevice	☒	☐
DM-RD-B	Device Management - ReinitializeDevice–B	☒	ReinitializeDevice	☐	☒
DM-BR-A	Device Management - Backup and Restore–A	☐	AtomicReadFile	☒	☐
		☐	AtomicWriteFile	☒	☐
		☐	CreateObject	☒	☐
		☐	ReinitializeDevice	☒	☐
DM-BR-B	Device Management - Backup and Restore–B	☐	AtomicReadFile	☐	☒
		☐	AtomicWriteFile	☐	☒
		☐	ReinitializeDevice	☐	☒
DM-R-A	Device Management - Restart–A	☐	UnconfimedCOVNotification	☐	☒
DM-R-B	Device Management - Restart–B	☐	UnconfimedCOVNotification	☒	☐
DM-LM-A	Device Management - List Manipulation–A	☐	AddListElement	☒	☐
		☐	RemoveListElement	☒	☐
DM-LM-B	Device Management - List Manipulation–B	☐	AddListElement	☐	☒
		☐	RemoveListElement	☐	☒
DM-OCD-A	Device Management - Object Creation and Deletion–A	☐	CreateObject	☒	☐
		☐	DeleteObject	☒	☐
DM-OCD-B	Device Management - Object Creation and Deletion–B	☐	CreateObject	☐	☒
		☐	DeleteObject	☐	☒
DM-VT-A	Device Management - Virtual Terminal–A	☐	VT-Open	☒	☐
		☐	VT-Close	☒	☒
		☐	VT-Data	☒	☒
DM-VT-B	Device Management - Virtual Terminal–B	☐	VT-Open	☐	☒
		☐	VT-Close	☒	☒
		☐	VT-Data	☒	☒

© HMS Industrial Networks S.L.U - All rights reserved
This information is subject to change without notice

4 Service Types

Service type	Service name	Supported	Remarks
Alarm and Event Services	AcknowledgeAlarm	☐	
	ConfirmedCOVNotification	☐	
	ConfirmedEventNotification	☐	
	GetAlarmSummary	☐	
	GetEnrollmentSummary	☐	
	SubscribeCOV	☒	
File Access Services	AtomicReadFile	☐	
	AtomicWriteFile	☐	
Object Access Services	AddListElement	☐	
	RemoveListElement	☐	
	CreateObject	☐	
	DeleteObject	☐	
	ReadProperty	☒	
	ReadPropertyConditional	☐	
	ReadPropertyMultiple	☒	
	ReadRange	☐	
	WriteProperty	☒	
	WritePropertyMultiple	☒	
Remote Device Management Services	DeviceComminicationControl	☐	
	ConfirmedPrivateTransfer	☐	
	ConfirmedTextMessage	☐	
	ReinitializeDevice	☒	
Virtual Terminal Services	VtOpen	☐	
	VtClose	☐	
	VtData	☐	
Security Services	Authenticate	☐	
	RequestKey	☐	
Unconfirmed Services	I-Am	☒	
	I-Have	☒	
	UnconfirmedCOVNotification	☐	
	UnconfirmedEventNotification	☐	
	UnconfirmedPrivateTransfer	☐	
	UnconfirmedTextMessage	☐	
	TimeSynchronization	☐	
	UtcTimeSynchronization	☐	
	Who-Has	☒	
	Who-Is	☒	
	LifeSafetyOperation	☐	
	SubscribeCOVProperty	☒	
	GetEventInformation	☐	

© HMS Industrial Networks S.L.U - All rights reserved
This information is subject to change without notice

5 Objects

5.1 Supported Object Types

The objects supported are shown in the table below.

Object Type	ID	Supported	Management Point
Analog-Input	0	☒	SetPoint_status Room Temperature_status ErrorCode Error Address OutdooorDemandRateValue_status DIP_SW_S1_status DIP_SW_S2_status SerialNumber
Analog-Output	1	☒	SetPoint_command RoomTemperature_command OutdooorDemandRateValue_command
Analog-Value	2	☒	OnTimeCounter OccupiedCoolSetPoint OccupiedHeatSetPoint UnoccupiedCoolSetPoint UnoccupiedHeatSetPoint
Averaging	18	☐	
Binary-Input	3	☒	OnOff_status ErrorActive FilterSign LockRemoteControlAll_status LockRemoteControlOnOff_status LockRemoteControlMode_status LockRemoteControlSetPoint_status LockRemoteControlFanSpeed_status LockRemoteControlVaneUD_status
Binary-Output	4	☒	OnOff_command FilterReset LockRemoteControlAll_command LockRemoteControlOnOff_command LockRemoteControlMode_command LockRemoteControlSetPoint_command LockRemoteControlFanSpeed_command LockRemoteControlVanesUD_command
Binary-Value	5	☒	OccupancyContinousCheck UnnoccupiedDeadBandAction
Calendar	6	☐	
Command	7	☐	
Device	8	☒	INBACPAN001R100
Event-Enrollment	9	☐	
File	10	☐	
Group	11	☐	
Life-Safety-Point	21	☐	
Life-Safety-Zone	22	☐	
Loop	12	☐	
Multistate-Input	13	☒	Mode_status FanSpeed_status AirDirectionUD_status ErrorCodeM RuntimeModeRestriction OutdooorDemandRate_status
Multistate-Output	14	☒	Mode_command FanSpeed_command AirDirectionUD_command OutdooorDemandRate_command

© HMS Industrial Networks S.L.U - All rights reserved
This information is subject to change without notice

Multistate-Value	19	☒	Occupancy
Notification-Class	15	☐	
Program	16	☐	
Schedule	17	☐	
Trend-Log	20	☐	

© HMS Industrial Networks S.L.U - All rights reserved
This information is subject to change without notice

5.2 Member objects

5.2.1 Type: Gateway

Object-name	Description	Object-type	Object-instance
INBACPAN001R100	Panasonic AC Interface	Device	246000*

* This is the default value.

5.2.2 Type: Indoor Unit

Object-name	Description	Object-type	Object-instance
OnOff_status		BI	0
OnOff_command		BO	0
Mode_status		MI	0
Mode_command		MO	0
SetPoint_status		AI	0
SetPoint_command		AO	0
FanSpeed_status		MI	1
FanSpeed_command		MO	1
AirDirectionUD_status		MI	2
AirDirectionUD_command		MO	2
RoomTemperature_status		AI	1
RoomTemperature_command		AO	1
ErrorCode		AI	2
ErrorCodeM		MI	4
ErrorActive		BI	1
ErrorAddress		AI	4
OnTimeCounter		AV	0
FilterSign		BI	6
FilterReset		BO	4
Occupancy		MV	0
OccupiedCoolSetPoint		AV	1
OccupiedHeatSetPoint		AV	2
UnoccupiedCoolSetPoint		AV	3
UnoccupiedHeatSetPoint		AV	4
OccupancyContinuousCheck		BV	0
UnoccupiedDeadbandAction		BV	1
RuntimeModeRestriction		MI	7
OutdooorDemandRate_status		MI	10
OutdooorDemandRate_command		MO	7
OutdooorDemandRateValue_status		AI	12
OutdooorDemandRateValue_command		AO	2
LockRemoteControlAll_status		BI	8
LockRemoteControlAll_command		BO	6
LockRemoteControlOnOff_status		BI	9
LockRemoteControlOnOff_command		BO	7
LockRemoteControlMode_status		BI	10
LockRemoteControlMode_command		BO	8
LockRemoteControlSetPoint_status		BI	11

© HMS Industrial Networks S.L.U - All rights reserved
This information is subject to change without notice

LockRemoteControlSetPoint_command		BO	9
LockRemoteControlFanSpeed_status		BI	12
LockRemoteControlFanSpeed_command		BO	10
LockRemoteControlVanesUD_status		BI	13
LockRemoteControlVanesUD_command		BO	11
DIP_SW_S1_status		AI	9
DIP_SW_S2_status		AI	10
SerialNumber		AI	11

© HMS Industrial Networks S.L.U - All rights reserved
This information is subject to change without notice

5.3 Objects and properties

5.3.1 Panasonic AC Gateway (Device Object Type)

Below you can find relevant information about the properties of the object type.

Object_Identifier: identifying the device in the BACnet MSTP network can be done automatically or manually:

- Automatical addressing. This is the device factory mode. Automatic addressing is based on using a base address of 246000 and adding to this number the address selected in SW2 P1...P7.
- Manual addressing. Device will switch into manual addressing mode once a value is received from BACnet side in this property. During manual addressing mode, SW2 P1...P7 address is not considered.

⚠ ***Important***: If **Object_Identifier** is overwritten from BACnet, SW2 configuration will not be considered for device instance calculation until a **Restore factory Settings** reset is performed.

Object_Name: In the **Device Object**, is configurable writing directly on this property.

Description: In the **Device Object**, is configurable writing directly on the property, length maximum 63 chars.

Property Identifier	Property Datatype	Value	ASHRAE	IBOX
Object_Identifier	BACnetObjectIdentifier	(Device, 246000*)	R	W
Object_Name	CharacterString	"INBACPAN001R100"	R	W
Object_Type	BACnetObjectType	DEVICE (8) (Device Object Type)	R	R
System_Status	BACnetDeviceStatus	OPERATIONAL (0)	R	R
Vendor_Name	CharacterString	"HMS Industrial Networks S.L.U"	R	R
Vendor_Identifier	Unsigned16	246	R	R
Model_Name	CharacterString	"INBACPAN001R100"	R	R
Firmware_Revision	CharacterString	"1.0.0.0"	R	R
Application_Software_ Version	CharacterString	"1.0.0.0"	R	R
Location	CharacterString	""	O	-
Description	CharacterString	"Panasonic AC interface"	O	W
Protocol_Version	Unsigned	1	R	R
Protocol_Revision	Unsigned	12	R	R
Protocol_Services_ Supported	BACnetServiceSupported	Refer to section 4 [Service Types]	R	R
Protocol_Object_Types_ Supported	BACnetObjectTypes Supported	Refer to section 5.1 [Object Types]	R	R
Object_List	BACnetArray[N] of BACnetObjectIdentifier	BACnetARRAY[N]	R	R
Structured_Object_List	BACnetArray[N] of BACnetObjectIdentifier	-	O	-
Max_APDU_Length_ Accepted	Unsigned	480	R	R
Segmentation_Supported	BACnetSegmentation	SEGMENTED-BOTH (0)	R	R
Max_Segments_accepted	Unsigned	16	O	R
VT_Classes_Supported	List of BACnetVTClass	-	O	-
Active_VT_Sessions	List of BACnetVTSession	-	O	-
Local_Date	Date	-	O	-

© HMS Industrial Networks S.L.U - All rights reserved
This information is subject to change without notice

Property Identifier	Property Datatype	Value	ASHRAE	IBOX
Local_Time	Time	-	O	-
UTC_Offset	INTEGER	-	O	-
Daylight_Savings_Status	BOOLEAN	-	O	-
APDU_Segment_Timeout	Unsigned	3000	R	R
APDU_Timeout	Unsigned	3000	R	R
Number_of_APDU_ Retries	Unsigned	3	R	R
List_Of_Session_Keys	List of BACnetSessionKey	-	O	-
Time_Synchronization_ Recipients	List of BACnetRecipient	-	O	-
Max_Master	Unsigned	32	R	W
Max_Info_Frames	Unsigned	1	O	R
Device_Address_Binding	List of BACnetAddressBinding	NULL (empty)	R	R
Database_Revision	Unsigned	0	R	R
Configuration_Files	BACnetArray[N] of BACnetObjectIdentifier	-	O	-
Last_Restore_Time	BACnetTimeStamp	-	O	-
Backup_Failure_Timeout	Unsigned16	-	O	-
Active_COV_ Subscriptions	List of BACnetCOVSubscription	List of BACnetCOVSubscription	O	R
Slave_Proxy_Enable	BACnetArray[N] of BOOLEAN	-	O	-
Manual_Slave_Address_ Binding	List of BACnetAddressBinding	-	O	-
Auto_Slave_Discovery	BACnetArray[N] of BOOLEAN	-	O	-
Slave_Address_Binding	BACnetAddressBinding	-	O	-
Last_Restart_Reason	BACnetRestartReason	-	O	-
Time_Of_Device_Restart	BACnetTimeStamp	-	O	-
Restart_Notification_ Recipients	List of BACnetRecipient	-	O	-
UTC_Time_ Synchronization_ Recipients	List of BACnetRecipient	-	O	-
Time_Synchronization_ Interval	Unsigned	-	O	-
Align_Intervals	BOOLEAN	-	O	-
Interval_Offset	Unsigned	-	O	-
Profile_Name	CharacterString	-	O	-

* This is the default value.

© HMS Industrial Networks S.L.U - All rights reserved
This information is subject to change without notice

5.3.2 OnOff_status (Binary Input Object Type)

It indicates if the indoor unit is in On or Off status.

Property Identifier	Property Datatype	Value	ASHRAE	IBOX
Object_Identifier	BACnetObjectIdentifier	(Binary Input, 0)	R	R
Object_Name	CharacterString	“OnOff_status”	R	R
Object_Type	BACnetObjectType	BINARY_INPUT (3)	R	R
Present_Value	BACnetBinaryPV	INACTIVE (0) / ACTIVE (1)	R	R
Description	CharacterString	-	O	-
Device_Type	CharacterString	-	O	-
Status_Flags	BACnetStatusFlags	{FALSE, FALSE/TRUE, FALSE, FALSE}	R	R
Event_State	BACnetEventState	STATE_NORMAL (0)	R	R
Reliability	BACnetReliability	NO_FAULT_DETECTED (0), UNRELIABLE_OTHER (7)	O	R
Out_Of_Service	BOOLEAN	FALSE	R	R
Polarity	BACnetPolarity	NORMAL (0)	R	R
Inactive_Text	CharacterString	"Off"	O	R
Active_Text	CharacterString	“On”	O	R
Change_Of_State_Time	BACnetDatetime	-	O	-
Change_Of_State_Count	Unsigned	-	O	-
Time_Of_State_Count_Reset	BACnetDatetime	-	O	-
Elapsed_Active_Time	Unsigned	-	O	-
Time_Of_Active_Time_Reset	BACnetDatetime	-	O	-
Time_Delay	Unsigned	-	O	-
Notification_Class	Unsigned	-	O	-
Alarm_Value	BACnetBinaryPV	-	O	-
Event_Enable	BACnetEventTransitionBits	-	O	-
Acked_Transitions	BACnetEventTransitionBits	-	O	-
Notify_Type	BACnetNotifyType	-	O	-
Event_Time_Stamps	BACnetArray[N] of BACnetTimeStamp	-	O	-
Profile_Name	CharacterString	-	O	-

© HMS Industrial Networks S.L.U - All rights reserved
This information is subject to change without notice

5.3.3 OnOff_command (Binary Output Object Type)

It sets the indoor unit to On or Off.

Property Identifier	Property Datatype	Value	ASHRAE	IBOX
Object_Identifier	BACnetObjectIdentifier	(Binary Output, 0)	R	R
Object_Name	CharacterString	“OnOff_command”	R	R
Object_Type	BACnetObjectType	BINARY_OUTPUT (4)	R	R
Present_Value	BACnetBinaryPV	INACTIVE (0) / ACTIVE (1)	W	W
Description	CharacterString	-	O	-
Device_Type	CharacterString	-	O	-
Status_Flags	BACnetStatusFlags	{FALSE, FALSE, FALSE, FALSE}	R	R
Event_State	BACnetEventState	STATE_NORMAL (0)	R	R
Reliability	BACnetReliability	NO_FAULT_DETECTED (0)	O	R
Out_Of_Service	BOOLEAN	FALSE	R	R
Polarity	BACnetPolarity	NORMAL (0)	R	R
Inactive_Text	CharacterString	"Off"	O	R
Active_Text	CharacterString	“On"	O	R
Change_Of_State_Time	BACnetDatetime	-	O	-
Change_Of_State_Count	Unsigned	-	O	-
Time_Of_State_Count_Reset	BACnetDatetime	-	O	-
Elapsed_Active_Time	Unsigned	-	O	-
Time_Of_Active_Time_Reset	BACnetDatetime	-	O	-
Minimum_Off_Time	Unsigned32	-	O	-
Minimum_On_Time	Unsigned32	-	O	-
Priority_Array	BACnetPriorityArray	BACnetPriorityArray	R	R
Relinquish_Default	BACnetBinaryPV	INACTIVE (0)	R	R
Time_Delay	Unsigned	-	O	-
Notification_Class	Unsigned	-	O	-
Feedback_Value	BACnetBinaryPV	-	O	-
Event_Enable	BACnetEventTransitionBits	-	O	-
Acked_Transitions	BACnetEventTransitionBits	-	O	-
Notify_Type	BACnetNotifyType	-	O	-
Event_Time_Stamps	BACnetArray[N] of BACnetTimeStamp	-	O	-
Profile_Name	CharacterString	-	O	-

© HMS Industrial Networks S.L.U - All rights reserved
This information is subject to change without notice

5.3.4 Mode_status (Multistate Input Object Type)

It indicates the active mode for the indoor unit.

Property Identifier	Property Datatype	Value	ASHRAE	IBOX
Object_Identifier	BACnetObjectIdentifier	(Multi-state Input, 0)	R	R
Object_Name	CharacterString	"Mode_status"	R	R
Object_Type	BACnetObjectType	MULTISTATE_INPUT (13)	R	R
Present_Value	Unsigned	1 ~ 7	R	R
Description	CharacterString	-	O	-
Device_Type	CharacterString	-	O	-
Status_Flags	BACnetStatusFlags	{FALSE, FALSE/TRUE, FALSE, FALSE}	R	R
Event_State	BACnetEventState	STATE_NORMAL (0)	R	R
Reliability	BACnetReliability	NO_FAULT_DETECTED (0), UNRELIABLE_OTHER (7)	O	R
Out_Of_Service	BOOLEAN	FALSE	R	R
Number_Of_States	Unsigned	7	R	R
State_Text	BACnetArray[N] of CharacterString	*Check **Mode Status setting table** below.*	O	R
Time_Delay	Unsigned	-	O	-
Notification_Class	Unsigned	-	O	-
Alarm_Values	List of Unsigned	-	O	-
Fault_Values	List of Unsigned	-	O	-
Event_Enable	BACnetEventTransitionBits	-	O	-
Acked_Transitions	BACnetEventTransitionBits	-	O	-
Notify_Type	BACnetNotifyType	-	O	-
Event_Time_Stamps	BACnetArray[N] of BACnetTimeStamp	-	O	-
Profile_Name	CharacterString	-	O	-

Mode status setting table

Mode status interpretation is possible using the value in the following correspondence table.

Pesent_Value	Contents displayed in State_Text
1	Heat
2	Cool
3	Fan
4	Dry
5	Auto
6	AutoHeat
7	AutoCool

© HMS Industrial Networks S.L.U - All rights reserved
This information is subject to change without notice

5.3.5 Mode_command (Multistate Output Object Type)

It allows control over the indoor unit's mode.

Property Identifier	Property Datatype	Value	ASHRAE	IBOX
Object_Identifier	BACnetObjectIdentifier	(Multi-state Output, 0)	R	R
Object_Name	CharacterString	"Mode_command"	R	R
Object_Type	BACnetObjectType	MULTISTATE_OUTPUT (14)	R	R
Present_Value	Unsigned	1 ~ 5	W	W
Description	CharacterString	-	O	-
Device_Type	CharacterString	-	O	-
Status_Flags	BACnetStatusFlags	{FALSE, FALSE, FALSE, FALSE}	R	R
Event_State	BACnetEventState	STATE_NORMAL (0)	R	R
Reliability	BACnetReliability	NO_FAULT_DETECTED (0)	O	R
Out_Of_Service	BOOLEAN	FALSE	R	R
Number_Of_States	Unsigned	5	R	R
State_Text	BACnetArray[N] of CharacterString	*Check **Mode Command setting table** below*	O	R
Priority_Array	BACnetPriorityArray	BACnetPriorityArray	R	R
Relinquish_Default	Unsigned	1	R	R
Time_Delay	Unsigned	-	O	-
Notification_Class	Unsigned	-	O	-
Feedback_Value	Unsigned	-	O	-
Event_Enable	BACnetEventTransitionBits	-	O	-
Acked_Transitions	BACnetEventTransitionBits	-	O	-
Notify_Type	BACnetNotifyType	-	O	-
Event_Time_Stamps	BACnetArray[N] of BACnetTimeStamp	-	O	-
Profile_Name	CharacterString	-	O	-

Mode Command setting table

Mode commands can be set using the values in the following correspondence table.

Pesent_Value	Contents displayed in State_Text
1	Heat
2	Cool
3	Fan
4	Dry
5	Auto

© HMS Industrial Networks S.L.U - All rights reserved
This information is subject to change without notice

5.3.6 Setpoint_status (Analog Input Object Type)

It indicates the current setpoint temperature in the indoor unit.

Property Identifier	Property Datatype	Value	ASHRAE	IBOX
Object_Identifier	BACnetObjectIdentifier	(Analog Input, 0)	R	R
Object_Name	CharacterString	“SetPoint_status”	R	R
Object_Type	BACnetObjectType	ANALOG_INPUT (0)	R	R
Present_Value*	REAL	16…31 ºC // 61…89 ºF	R	R
Description	CharacterString	-	O	-
Device_Type	CharacterString	-	O	-
Status_Flags	BACnetStatusFlags	{FALSE, FALSE/TRUE, FALSE, FALSE}	R	R
Event_State	BACnetEventState	STATE_NORMAL (0)	R	R
Reliability	BACnetReliability	NO_FAULT_DETECTED (0), UNRELIABLE_OTHER (7)	O	R
Out_Of_Service	BOOLEAN	FALSE	R	R
Update_Interval	Unsigned	-	O	-
Units *	BACnetEngineeringUnits	Degrees Celsius (62), Degrees Fahrenheit (64)	R	R
Min_Pres_Value *	REAL	16 // 61	O	R
Max_Pres_Value *	REAL	31 // 89	O	R
Resolution	REAL	-	O	-
COV_Increment	REAL	0	O	W
Time_Delay	Unsigned	-	O	-
Notification_Class	Unsigned	-	O	-
High_Limit	REAL	-	O	-
Low_Limit	REAL	-	O	-
Deadband	REAL	-	O	-
Limit_Enable	BACnetLimitEnable	-	O	-
Event_Enable	BACnetEventTransitionBits	-	O	-
Acked_Transitions	BACnetEventTransitionBits	-	O	-
Notify_Type	BACnetNotifyType	-	O	-
Event_Time_Stamps	BACnetArray[N] of BACnetTimeStamp	-	O	-
Profile_Name	CharacterString	-	O	-

* Use of Celsius or Fahrenheits units can be selected throught the switch configuration. Check section 6.1 for more information.

© HMS Industrial Networks S.L.U - All rights reserved
This information is subject to change without notice

5.3.7 Setpoint_command (Analog Output Object Type)

It sets the desired temperature in the indoor unit.

Property Identifier	Property Datatype	Value	ASHRAE	IBOX
Object_Identifier	BACnetObjectIdentifier	(Analog Output, 0)	R	R
Object_Name	CharacterString	“SetPoint_command”	R	R
Object_Type	BACnetObjectType	ANALOG_OUTPUT (1)	R	R
Present_Value *	REAL	16…31 ºC	R	R
Description	CharacterString	-	O	-
Device_Type	CharacterString	-	O	-
Status_Flags	BACnetStatusFlags	{FALSE, FALSE, FALSE, FALSE}	R	R
Event_State	BACnetEventState	STATE_NORMAL (0)	R	R
Reliability	BACnetReliability	NO_FAULT_DETECTED (0)	O	R
Out_Of_Service	BOOLEAN	FALSE	R	R
Update_Interval	Unsigned	-	O	-
Units *	BACnetEngineeringUnits	Degrees Celsius (62), Degrees Fahrenheit (64)	R	R
Min_Pres_Value	REAL	16	O	R
Max_Pres_Value	REAL	31	O	R
Resolution	REAL	-	O	-
COV_Increment	REAL	0	O	W
Priority_Array	BACnetPriorityArray	BACnetPriorityArray	R	R
Relinquish_Default	Unsigned	22	R	R
Time_Delay	Unsigned	-	O	-
Notification_Class	Unsigned	-	O	-
High_Limit	REAL	-	O	-
Low_Limit	REAL	-	O	-
Deadband	REAL	-	O	-
Limit_Enable	BACnetLimitEnable	-	O	-
Event_Enable	BACnetEventTransitionBits	-	O	-
Acked_Transitions	BACnetEventTransitionBits	-	O	-
Notify_Type	BACnetNotifyType	-	O	-
Event_Time_Stamps	BACnetArray[N] of BACnetTimeStamp	-	O	-
Profile_Name	CharacterString	-	O	-

* Use of Celsius or Fahrenheits units can be selected throught the switch configuration. Check section 6.1 for more information.

© HMS Industrial Networks S.L.U - All rights reserved
This information is subject to change without notice

5.3.8 FanSpeed_status (Multistate Input Object Type)

It indicates the fan speed status of the indoor unit.

Property Identifier	Property Datatype	Value	ASHRAE	IBOX
Object_Identifier	BACnetObjectIdentifier	(Multi-state Input, 1)	R	R
Object_Name	CharacterString	"FanSpeed_status"	R	R
Object_Type	BACnetObjectType	MULTISTATE_INPUT (13)	R	R
Present_Value	Unsigned	1 ~ 6	R	R
Description	CharacterString	-	O	-
Device_Type	CharacterString	-	O	-
Status_Flags	BACnetStatusFlags	{FALSE, FALSE/TRUE, FALSE, FALSE}	R	R
Event_State	BACnetEventState	STATE_NORMAL (0)	R	R
Reliability	BACnetReliability	NO_FAULT_DETECTED (0), UNRELIABLE_OTHER (7)	O	R
Out_Of_Service	BOOLEAN	FALSE/TRUE	R	R
Number_Of_States	Unsigned	6	R	R
State_Text	BACnetArray[N] of CharacterString	*Check **Fan Speed status setting table** below.*	O	R
Time_Delay	Unsigned	-	O	-
Notification_Class	Unsigned	-	O	-
Alarm_Values	List of Unsigned	-	O	-
Fault_Values	List of Unsigned	-	O	-
Event_Enable	BACnetEventTransitionBits	-	O	-
Acked_Transitions	BACnetEventTransitionBits	-	O	-
Notify_Type	BACnetNotifyType	-	O	-
Event_Time_Stamps	BACnetArray[N] of BACnetTimeStamp	-	O	-
Profile_Name	CharacterString	-	O	-

Fan Speed status setting table

Fan speed interpretation is possible using the value in the following correspondence table.

Pesent_Value	Contents displayed in State_Text
1	Auto
2	Fan Speed 1
3	Fan Speed 2
4	Fan Speed 3
5	Fan Speed 4
6	Fan Speed 5

© HMS Industrial Networks S.L.U - All rights reserved
This information is subject to change without notice

5.3.9 FanSpeed_command (Multistate Output Object Type)

It allows control over the fan speed for the indoor unit.

Property Identifier	Property Datatype	Value	ASHRAE	IBOX
Object_Identifier	BACnetObjectIdentifier	(Multi-state Output, 1)	R	R
Object_Name	CharacterString	“FanSpeed_command”	R	R
Object_Type	BACnetObjectType	MULTISTATE_OUTPUT (14)	R	R
Present_Value	Unsigned	1 ~ 6	W	W
Description	CharacterString	-	O	-
Device_Type	CharacterString	-	O	-
Status_Flags	BACnetStatusFlags	{FALSE, FALSE, FALSE, FALSE}	R	R
Event_State	BACnetEventState	STATE_NORMAL (0)	R	R
Reliability	BACnetReliability	NO_FAULT_DETECTED (0)	O	R
Out_Of_Service	BOOLEAN	FALSE	R	R
Number_Of_States	Unsigned	6	R	R
State_Text	BACnetArray[N] of CharacterString	*Check **Fan Speed command setting table** below*	O	R
Priority_Array	BACnetPriorityArray	BACnetPriorityArray	R	R
Relinquish_Default	Unsigned	1	R	R
Time_Delay	Unsigned	-	O	-
Notification_Class	Unsigned	-	O	-
Feedback_Value	Unsigned	-	O	-
Event_Enable	BACnetEventTransitionBits	-	O	-
Acked_Transitions	BACnetEventTransitionBits	-	O	-
Notify_Type	BACnetNotifyType	-	O	-
Event_Time_Stamps	BACnetArray[N] of BACnetTimeStamp	-	O	-
Profile_Name	CharacterString	-	O	-

Fan Speed command setting table

Fan speed interpretation is possible using the value in the following correspondence table.

Pesent_Value	Contents displayed in State_Text
1	Auto
2	Fan Speed 1
3	Fan Speed 2
4	Fan Speed 3
5	Fan Speed 4
6	Fan Speed 5

© HMS Industrial Networks S.L.U - All rights reserved
This information is subject to change without notice

5.3.10 AirDirectionUD_status (Multistate Input Object Type)

It indicates the status of the vertical vane (Up/Down) for the indoor unit.

Property Identifier	Property Datatype	Value	ASHRAE	IBOX
Object_Identifier	BACnetObjectIdentifier	(Multi-state Input, 2)	R	R
Object_Name	CharacterString	“AirDirectionUD_status”	R	R
Object_Type	BACnetObjectType	MULTISTATE_INPUT(13)	R	R
Present_Value	Unsigned	1 ~ 7	R	R
Description	CharacterString	-	O	-
Device_Type	CharacterString	-	O	-
Status_Flags	BACnetStatusFlags	{FALSE, FALSE/TRUE, FALSE, FALSE}	R	R
Event_State	BACnetEventState	STATE_NORMAL (0)	R	R
Reliability	BACnetReliability	NO_FAULT_DETECTED (0), UNRELIABLE_OTHER (7)	O	R
Out_Of_Service	BOOLEAN	FALSE/TRUE	R	R
Number_Of_States	Unsigned	7	R	R
State_Text	BACnetArray[N] of CharacterString	*Check **Air Direction Status setting table** below.*	O	R
Time_Delay	Unsigned	-	O	-
Notification_Class	Unsigned	-	O	-
Alarm_Values	List of Unsigned	-	O	-
Fault_Values	List of Unsigned	-	O	-
Event_Enable	BACnetEventTransitionBits	-	O	-
Acked_Transitions	BACnetEventTransitionBits	-	O	-
Notify_Type	BACnetNotifyType	-	O	-
Event_Time_Stamps	BACnetArray[N] of BACnetTimeStamp	-	O	-
Profile_Name	CharacterString	-	O	-

Air direction Up/Down status setting table

Air direction interpretation is possible using the value in the following correspondence table.

Pesent_Value	Contents displayed in State_Text
1	Stop
2	Up
3	Mid-1
4	Mid-2
5	Mid-3
6	Down
7	Swing

© HMS Industrial Networks S.L.U - All rights reserved
This information is subject to change without notice

5.3.11 AirDirectionUD_command (Multistate Output Object Type)

It allows control over the vertical air direction (Up/Down) for the indoor unit.

Property Identifier	Property Datatype	Value	ASHRAE	IBOX
Object_Identifier	BACnetObjectIdentifier	(Multi-state Output, 2)	R	R
Object_Name	CharacterString	"AirDirectionUD_command"	R	R
Object_Type	BACnetObjectType	MULTISTATE_OUTPUT (14)	R	R
Present_Value	Unsigned	1 ~ 7	W	W
Description	CharacterString	-	O	-
Device_Type	CharacterString	-	O	-
Status_Flags	BACnetStatusFlags	{FALSE, FALSE, FALSE, FALSE}	R	R
Event_State	BACnetEventState	STATE_NORMAL (0)	R	R
Reliability	BACnetReliability	NO_FAULT_DETECTED (0)	O	R
Out_Of_Service	BOOLEAN	FALSE	R	R
Number_Of_States	Unsigned	7	R	R
State_Text	BACnetArray[N] of CharacterString	*Check **Air Direction Command setting table** below*	O	R
Priority_Array	BACnetPriorityArray	-	R	R
Relinquish_Default	Unsigned	-	R	R
Time_Delay	Unsigned	-	O	-
Notification_Class	Unsigned	-	O	-
Feedback_Value	Unsigned	-	O	-
Event_Enable	BACnetEventTransitionBits	-	O	-
Acked_Transitions	BACnetEventTransitionBits	-	O	-
Notify_Type	BACnetNotifyType	-	O	-
Event_Time_Stamps	BACnetArray[N] of BACnetTimeStamp	-	O	-
Profile_Name	CharacterString	-	O	-

Air direction Up/Down Command setting table

Air direction commands can be set using the values in the following correspondence table.

Pesent_Value	Contents displayed in State_Text
1	Stop
2	Swing
3	Mid-1
4	Mid-2
5	Mid-3
6	Down
7	Swing

© HMS Industrial Networks S.L.U - All rights reserved
This information is subject to change without notice

5.3.12 RoomTemperature_status (Analog Input Object Type)

It indicates the room temperature from the sensor in the indoor unit.

Property Identifier	Property Datatype	Value	ASHRAE	IBOX
Object_Identifier	BACnetObjectIdentifier	(Analog Input, 1)	R	R
Object_Name	CharacterString	“RoomTemperature_status”	R	R
Object_Type	BACnetObjectType	ANALOG_INPUT (0)	R	R
Present_Value	REAL	10…38ºC // 50…89,6 ºF	R	R
Description	CharacterString	-	O	-
Device_Type	CharacterString	-	O	-
Status_Flags	BACnetStatusFlags	{FALSE, FALSE/TRUE, FALSE, FALSE}	R	R
Event_State	BACnetEventState	STATE_NORMAL (0)	R	R
Reliability	BACnetReliability	NO_FAULT_DETECTED (0), UNRELIABLE_OTHER (7)	O	R
Out_Of_Service	BOOLEAN	FALSE/TRUE	R	R
Update_Interval	Unsigned	-	O	-
Units	BACnetEngineeringUnits	Degrees Celsius (62) Degrees Fahrenheit (64)	R	R
Min_Pres_Value	REAL	-	O	-
Max_Pres_Value	REAL	-	O	-
Resolution	REAL	-	O	-
COV_Increment	REAL	0	O	W
Time_Delay	Unsigned	-	O	-
Notification_Class	Unsigned	-	O	-
High_Limit	REAL	-	O	-
Low_Limit	REAL	-	O	-
Deadband	REAL	-	O	-
Limit_Enable	BACnetLimitEnable	-	O	-
Event_Enable	BACnetEventTransitionBits	-	O	-
Acked_Transitions	BACnetEventTransitionBits	-	O	-
Notify_Type	BACnetNotifyType	-	O	-
Event_Time_Stamps	BACnetArray[N] of BACnetTimeStamp	-	O	-
Profile_Name	CharacterString	-	O	-

© HMS Industrial Networks S.L.U - All rights reserved
This information is subject to change without notice

5.3.13 RoomTemperature_command (Analog Output Object Type)

It sets the desired temperature in the indoor unit.

Property Identifier	Property Datatype	Value	ASHRAE	IBOX
Object_Identifier	BACnetObjectIdentifier	(Analog Output, 1)	R	R
Object_Name	CharacterString	“RoomTemperature_command”	R	R
Object_Type	BACnetObjectType	ANALOG_OUTPUT (1)	R	R
Present_Value *	REAL	16…31 ºC	R	R
Description	CharacterString	-	O	-
Device_Type	CharacterString	-	O	-
Status_Flags	BACnetStatusFlags	{FALSE, FALSE, FALSE, FALSE}	R	R
Event_State	BACnetEventState	STATE_NORMAL (0)	R	R
Reliability	BACnetReliability	NO_FAULT_DETECTED (0)	O	R
Out_Of_Service	BOOLEAN	FALSE	R	R
Update_Interval	Unsigned	-	O	-
Units *	BACnetEngineeringUnits	Degrees Celsius (62), Degrees Fahrenheit (64)	R	R
Min_Pres_Value	REAL	16	O	R
Max_Pres_Value	REAL	31	O	R
Resolution	REAL	-	O	-
COV_Increment	REAL	0	O	W
Priority_Array	BACnetPriorityArray	BACnetPriorityArray	R	R
Relinquish_Default	Unsigned	22	R	R
Time_Delay	Unsigned	-	O	-
Notification_Class	Unsigned	-	O	-
High_Limit	REAL	-	O	-
Low_Limit	REAL	-	O	-
Deadband	REAL	-	O	-
Limit_Enable	BACnetLimitEnable	-	O	-
Event_Enable	BACnetEventTransitionBits	-	O	-
Acked_Transitions	BACnetEventTransitionBits	-	O	-
Notify_Type	BACnetNotifyType	-	O	-
Event_Time_Stamps	BACnetArray[N] of BACnetTimeStamp	-	O	-
Profile_Name	CharacterString	-	O	-

* Use of Celsius or Fahrenheits units can be selected throught the switch configuration. Check section 6.1 for more information.

© HMS Industrial Networks S.L.U - All rights reserved
This information is subject to change without notice

5.3.14 ErrorCode (Analog Input Object Type)

It indicates the current error present in the AC system.

Property Identifier	Property Datatype	Value	ASHRAE	IBOX
Object_Identifier	BACnetObjectIdentifier	(Analog Input, 2)	R	R
Object_Name	CharacterString	“ErrorCode”	R	R
Object_Type	BACnetObjectType	ANALOG_INPUT (0)	R	R
Present_Value	REAL	-1… 6846	R	R
Description	CharacterString	-	O	-
Device_Type	CharacterString	-	O	-
Status_Flags	BACnetStatusFlags	{FALSE, FALSE, FALSE, FALSE}	R	R
Event_State	BACnetEventState	STATE_NORMAL (0)	R	R
Reliability	BACnetReliability	NO_FAULT_DETECTED (0)	O	R
Out_Of_Service	BOOLEAN	FALSE	R	R
Update_Interval	Unsigned	300	O	-
Units	BACnetEngineeringUnits	NO_UNITS (95)	R	R
Min_Pres_Value	REAL	-	O	-
Max_Pres_Value	REAL	-	O	-
Resolution	REAL	-	O	-
COV_Increment	REAL	0	O	W
Time_Delay	Unsigned	-	O	-
Notification_Class	Unsigned	-	O	-
High_Limit	REAL	-	O	-
Low_Limit	REAL	-	O	-
Deadband	REAL	-	O	-
Limit_Enable	BACnetLimitEnable	-	O	-
Event_Enable	BACnetEventTransitionBits	-	O	-
Acked_Transitions	BACnetEventTransitionBits	-	O	-
Notify_Type	BACnetNotifyType	-	O	-
Event_Time_Stamps	BACnetArray[N] of BACnetTimeStamp	-	O	-
Profile_Name	CharacterString	-	O	-

© HMS Industrial Networks S.L.U - All rights reserved
This information is subject to change without notice

5.3.15 ErrorCodeM (Multistate Input Object Type)

It indicates the current error present in the AC system.

Property Identifier	Property Datatype	Value	ASHRAE	IBOX
Object_Identifier	BACnetObjectIdentifier	(Multi-state Input, 4)	R	R
Object_Name	CharacterString	“ErrorCodeM”	R	R
Object_Type	BACnetObjectType	MULTISTATE_INPUT(13)	R	R
Present_Value	Unsigned	1 ~ 251	R	R
Description	CharacterString	-	O	-
Device_Type	CharacterString	-	O	-
Status_Flags	BACnetStatusFlags	{FALSE, FALSE, FALSE, FALSE}	R	R
Event_State	BACnetEventState	STATE_NORMAL (0)	R	R
Reliability	BACnetReliability	NO_FAULT_DETECTED (0)	O	R
Out_Of_Service	BOOLEAN	FALSE	R	R
Number_Of_States	Unsigned	251	R	R
State_Text	BACnetArray[N] of CharacterString	*Check **Error Code table** below.*	O	R
Time_Delay	Unsigned	-	O	-
Notification_Class	Unsigned	-	O	-
Alarm_Values	List of Unsigned	-	O	-
Fault_Values	List of Unsigned	-	O	-
Event_Enable	BACnetEventTransitionBits	-	O	-
Acked_Transitions	BACnetEventTransitionBits	-	O	-
Notify_Type	BACnetNotifyType	-	O	-
Event_Time_Stamps	BACnetArray[N] of BACnetTimeStamp	-	O	-
Profile_Name	CharacterString	-	O	-

© HMS Industrial Networks S.L.U - All rights reserved
This information is subject to change without notice

Error Code table

In the table below you will find the error correspondence value.

Pesent_Value	State_Text	Pesent_Value	State_Text	Pesent_Value	State_Text	Pesent_Value	State_Text
1	-	65	E01	129	H03	193	L05
2	CommError	66	E02	130	H04	194	L06
3	A1	67	E03	131	H05	195	L07
4	A2	68	E04	132	H06	196	L08
5	A3	69	E05	133	H07	197	L09
6	A4	70	E06	134	H08	198	L10
7	A5	71	E07	135	H09	199	L11
8	A6	72	E08	136	H10	200	L12
9	A7	73	E09	137	H11	201	L13
10	A8	74	E10	138	H12	202	L14
11	A9	75	E11	139	H13	203	L15
12	A10	76	E12	140	H14	204	L16
13	A11	77	E13	141	H15	205	L17
14	A12	78	E14	142	H16	206	L18
15	A13	79	E15	143	H17	207	L19
16	A14	80	E16	144	H18	208	L20
17	A15	81	E17	145	H19	209	L21
18	A16	82	E18	146	H20	210	L22
19	A17	83	E19	147	H21	211	L23
20	A18	84	E20	148	H22	212	L24
21	A19	85	E21	149	H23	213	L25
22	A20	86	E22	150	H24	214	L26
23	A21	87	E23	151	H25	215	L27
24	A22	88	E24	152	H26	216	L28
25	A23	89	E25	153	H27	217	L29
26	A24	90	E26	154	H28	218	L30
27	A25	91	E27	155	H29	219	L31
28	A26	92	E28	156	H30	220	P01
29	A27	93	E29	157	H31	221	P02
30	A28	94	E30	158	J01	222	P03
31	A29	95	E31	159	J02	223	P04
32	A30	96	F01	160	J03	224	P05
33	A31	97	F02	161	J04	225	P06
34	C01	98	F03	162	J05	226	P07
35	C02	99	F04	163	J06	227	P08
36	C03	100	F05	164	J07	228	P09
37	C04	101	F06	165	J08	229	P10
38	C05	102	F07	166	J09	230	P11
39	C06	103	F08	167	J10	231	P12
40	C07	104	F09	168	J11	232	P13
41	C08	105	F10	169	J12	233	P14
42	C09	106	F11	170	J13	234	P15
43	C10	107	F12	171	J14	235	P16
44	C11	108	F13	172	J15	236	P17
45	C12	109	F14	173	J16	237	P18
46	C13	110	F15	174	J17	238	P19
47	C14	111	F16	175	J18	239	P20
48	C15	112	F17	176	J19	240	P21
49	C16	113	F18	177	J20	241	P22
50	C17	114	F19	178	J21	242	P23
51	C18	115	F20	179	J22	243	P24
52	C19	116	F21	180	J23	244	P25
53	C20	117	F22	181	J24	245	P26
54	C21	118	F23	182	J25	246	P27
55	C22	119	F24	183	J26	247	P28
56	C23	120	F25	184	J27	248	P29
57	C24	121	F26	185	J28	249	P30

© HMS Industrial Networks S.L.U - All rights reserved
This information is subject to change without notice

58	C25	122	F27	186	J29	250	P31
59	C26	123	F28	187	J30	251	UNKNOWN
60	C27	124	F29	188	J31		
61	C28	125	F30	189	L01		
62	C29	126	F31	190	L02		
63	C30	127	H01	191	L03		
64	C31	128	H02	192	L04		

© HMS Industrial Networks S.L.U - All rights reserved
This information is subject to change without notice

5.3.16 ErrorActive (Binary Input Object Type)

It indicates if there is an error active in the indoor unit.

Property Identifier	Property Datatype	Value	ASHRAE	IBOX
Object_Identifier	BACnetObjectIdentifier	(Binary Input, 1)	R	R
Object_Name	CharacterString	“ErrorActive”	R	R
Object_Type	BACnetObjectType	BINARY_INPUT (3)	R	R
Present_Value	BACnetBinaryPV	INACTIVE (0) / ACTIVE (1)	R	R
Description	CharacterString	-	O	-
Device_Type	CharacterString	-	O	-
Status_Flags	BACnetStatusFlags	{FALSE, FALSE, FALSE, FALSE}	R	R
Event_State	BACnetEventState	STATE_NORMAL (0)	R	R
Reliability	BACnetReliability	NO_FAULT_DETECTED (0)	O	R
Out_Of_Service	BOOLEAN	FALSE	R	R
Polarity	BACnetPolarity	NORMAL (0)	R	R
Inactive_Text	CharacterString	"No"	O	R
Active_Text	CharacterString	“Error”	O	R
Change_Of_State_Time	BACnetDatetime	-	O	-
Change_Of_State_Count	Unsigned	-	O	-
Time_Of_State_Count_Reset	BACnetDatetime	-	O	-
Elapsed_Active_Time	Unsigned	-	O	-
Time_Of_Active_Time_Reset	BACnetDatetime	-	O	-
Time_Delay	Unsigned	-	O	-
Notification_Class	Unsigned	-	O	-
Alarm_Value	BACnetBinaryPV	-	O	-
Event_Enable	BACnetEventTransitionBits	-	O	-
Acked_Transitions	BACnetEventTransitionBits	-	O	-
Notify_Type	BACnetNotifyType	-	O	-
Event_Time_Stamps	BACnetArray[N] of BACnetTimeStamp	-	O	-
Profile_Name	CharacterString	-	O	-

© HMS Industrial Networks S.L.U - All rights reserved
This information is subject to change without notice

5.3.17 Error_Address (Analog Input Object Type)

It indicates the address of the indoor unit with is reporting the error.

Property Identifier	Property Datatype	Value	ASHRAE	IBOX
Object_Identifier	BACnetObjectIdentifier	(Analog Input, 4)	R	R
Object_Name	CharacterString	“ErrorAddress”	R	R
Object_Type	BACnetObjectType	ANALOG_INPUT (0)	R	R
Present_Value*	REAL		R	R
Description	CharacterString	-	O	-
Device_Type	CharacterString	-	O	-
Status_Flags	BACnetStatusFlags	{FALSE, FALSE/TRUE, FALSE, FALSE}	R	R
Event_State	BACnetEventState	STATE_NORMAL (0)	R	R
Reliability	BACnetReliability	NO_FAULT_DETECTED (0), UNRELIABLE_OTHER (7)	O	R
Out_Of_Service	BOOLEAN	FALSE	R	R
Update_Interval	Unsigned	-	O	-
Units *	BACnetEngineeringUnits		R	R
Min_Pres_Value *	REAL		O	R
Max_Pres_Value *	REAL		O	R
Resolution	REAL	-	O	-
COV_Increment	REAL	0	O	W
Time_Delay	Unsigned	-	O	-
Notification_Class	Unsigned	-	O	-
High_Limit	REAL	-	O	-
Low_Limit	REAL	-	O	-
Deadband	REAL	-	O	-
Limit_Enable	BACnetLimitEnable	-	O	-
Event_Enable	BACnetEventTransitionBits	-	O	-
Acked_Transitions	BACnetEventTransitionBits	-	O	-
Notify_Type	BACnetNotifyType	-	O	-
Event_Time_Stamps	BACnetArray[N] of BACnetTimeStamp	-	O	-
Profile_Name	CharacterString	-	O	-

© HMS Industrial Networks S.L.U - All rights reserved
This information is subject to change without notice

5.3.18 OnTimeCounter (Analog Value Object Type)

It indicates the AC unit uptime.

Property Identifier	Property Datatype	Value	ASHRAE	IBOX
Object_Identifier	BACnetObjectIdentifier	(Analog Value, 0)	R	R
Object_Name	CharacterString	“OnTimeCounter”	R	R
Object_Type	BACnetObjectType	ANALOG_VALUE (2)	R	R
Present_Value	REAL	0 .. 65535	R	R
Description	CharacterString	-	O	-
Status_Flags	BACnetStatusFlags	{FALSE, FALSE, FALSE, FALSE}	R	R
Event_State	BACnetEventState	STATE_NORMAL (0)	R	R
Reliability	BACnetReliability	NO_FAULT_DETECTED (0)	O	R
Out_Of_Service	BOOLEAN	FALSE	R	R
Update_Interval	Unsigned	-	O	-
Units	BACnetEngineeringUnits	Hours (71)	R	R
Min_Pres_Value	REAL	-	O	-
Max_Pres_Value	REAL	-	O	-
Resolution	REAL	-	O	-
COV_Increment	REAL	0	O	W
Time_Delay	Unsigned	-	O	-
Notification_Class	Unsigned	-	O	-
High_Limit	REAL	-	O	-
Low_Limit	REAL	-	O	-
Deadband	REAL	-	O	-
Limit_Enable	BACnetLimitEnable	-	O	-
Event_Enable	BACnetEventTransitionBits	-	O	-
Acked_Transitions	BACnetEventTransitionBits	-	O	-
Notify_Type	BACnetNotifyType	-	O	-
Event_Time_Stamps	BACnetArray[N] of BACnetTimeStamp	-	O	-
Profile_Name	CharacterString	-	O	-

© HMS Industrial Networks S.L.U - All rights reserved
This information is subject to change without notice

5.3.19 FilterSign (Binary Input Object Type)

It indicates if the filter signal is active or not.

Property Identifier	Property Datatype	Value	ASHRAE	IBOX
Object_Identifier	BACnetObjectIdentifier	(Binary Input, 6)	R	R
Object_Name	CharacterString	“FilterSign”	R	R
Object_Type	BACnetObjectType	BINARY_INPUT (3)	R	R
Present_Value	BACnetBinaryPV	INACTIVE (0) / ACTIVE (1)	R	R
Description	CharacterString	-	O	-
Device_Type	CharacterString	-	O	-
Status_Flags	BACnetStatusFlags	{FALSE, FALSE, FALSE, FALSE}	R	R
Event_State	BACnetEventState	STATE_NORMAL (0)	R	R
Reliability	BACnetReliability	NO_FAULT_DETECTED (0)	O	R
Out_Of_Service	BOOLEAN	FALSE	R	R
Polarity	BACnetPolarity	NORMAL (0)	R	R
Inactive_Text	CharacterString	"No"	O	R
Active_Text	CharacterString	“Yes”	O	R
Change_Of_State_Time	BACnetDatetime	-	O	-
Change_Of_State_Count	Unsigned	-	O	-
Time_Of_State_Count_Reset	BACnetDatetime	-	O	-
Elapsed_Active_Time	Unsigned	-	O	-
Time_Of_Active_Time_Reset	BACnetDatetime	-	O	-
Time_Delay	Unsigned	-	O	-
Notification_Class	Unsigned	-	O	-
Alarm_Value	BACnetBinaryPV	-	O	-
Event_Enable	BACnetEventTransitionBits	-	O	-
Acked_Transitions	BACnetEventTransitionBits	-	O	-
Notify_Type	BACnetNotifyType	-	O	-
Event_Time_Stamps	BACnetArray[N] of BACnetTimeStamp	-	O	-
Profile_Name	CharacterString	-	O	-

© HMS Industrial Networks S.L.U - All rights reserved
This information is subject to change without notice

5.3.20 FilterReset (Binary Output Object Type)

It resets the filter signal.

Property Identifier	Property Datatype	Value	ASHRAE	IBOX
Object_Identifier	BACnetObjectIdentifier	(Binary Output, 4)	R	R
Object_Name	CharacterString	“FilterReset”	R	R
Object_Type	BACnetObjectType	BINARY_OUTPUT (4)	R	R
Present_Value	BACnetBinaryPV	INACTIVE (0) / ACTIVE (1)	W	W
Description	CharacterString	-	O	-
Device_Type	CharacterString	-	O	-
Status_Flags	BACnetStatusFlags	{FALSE, FALSE, FALSE, FALSE}	R	R
Event_State	BACnetEventState	STATE_NORMAL (0)	R	R
Reliability	BACnetReliability	NO_FAULT_DETECTED (0)	O	R
Out_Of_Service	BOOLEAN	FALSE	R	R
Polarity	BACnetPolarity	NORMAL (0)	R	R
Inactive_Text	CharacterString	"Normal"	O	R
Active_Text	CharacterString	“Reset"	O	R
Change_Of_State_Time	BACnetDatetime	-	O	-
Change_Of_State_Count	Unsigned	-	O	-
Time_Of_State_Count_Reset	BACnetDatetime	-	O	-
Elapsed_Active_Time	Unsigned	-	O	-
Time_Of_Active_Time_Reset	BACnetDatetime	-	O	-
Minimum_Off_Time	Unsigned32	-	O	-
Minimum_On_Time	Unsigned32	-	O	-
Priority_Array	BACnetPriorityArray	BACnetPriorityArray	R	R
Relinquish_Default	BACnetBinaryPV	INACTIVE (0)	R	R
Time_Delay	Unsigned	-	O	-
Notification_Class	Unsigned	-	O	-
Feedback_Value	BACnetBinaryPV	-	O	-
Event_Enable	BACnetEventTransitionBits	-	O	-
Acked_Transitions	BACnetEventTransitionBits	-	O	-
Notify_Type	BACnetNotifyType	-	O	-
Event_Time_Stamps	BACnetArray[N] of BACnetTimeStamp	-	O	-
Profile_Name	CharacterString	-	O	-

© HMS Industrial Networks S.L.U - All rights reserved
This information is subject to change without notice

5.3.21 Occupancy (Multistate Value Object Type)

It indicates the use or not of the occupancy function.

Property Identifier	Property Datatype	Value	ASHRAE	IBOX
Object_Identifier	BACnetObjectIdentifier	(Multi-state Output, 0)	R	R
Object_Name	CharacterString	"Occupancy"	R	R
Object_Type	BACnetObjectType	MULTISTATE_VALUE (19)	R	R
Present_Value	Unsigned	1 ~ 3	W	W
Description	CharacterString	-	O	-
Status_Flags	BACnetStatusFlags	{FALSE, FALSE, FALSE, FALSE}	R	R
Event_State	BACnetEventState	STATE_NORMAL (0)	R	R
Reliability	BACnetReliability	NO_FAULT_DETECTED (0)	O	R
Out_Of_Service	BOOLEAN	FALSE	R	R
Number_Of_States	Unsigned	3	R	R
State_Text	BACnetArray[N] of CharacterString	*Check **Occupancy setting table** below*	O	R
Priority_Array	BACnetPriorityArray	-	R	-
Relinquish_Default	Unsigned	-	R	-
Time_Delay	Unsigned	-	O	-
Notification_Class	Unsigned	-	O	-
Alarm_Value	Unsigned	-	O	-
Fault_Value	Unsigned		O	-
Event_Enable	BACnetEventTransitionBits	-	O	-
Acked_Transitions	BACnetEventTransitionBits	-	O	-
Notify_Type	BACnetNotifyType	-	O	-
Event_Time_Stamps	BACnetArray[N] of BACnetTimeStamp	-	O	-
Profile_Name	CharacterString	-	O	-

Occupancy values table

Check possible Occupancy values in the following correspondence table.

Pesent_Value	Contents displayed in State_Text
1	Occupied
2	Unoccupied
3	Disabled

© HMS Industrial Networks S.L.U - All rights reserved
This information is subject to change without notice

5.3.22 OccupiedCoolSetPoint (Analog Value Object Type)

It indicates the current Setpoint when Cool mode is selected and Occupancy is enabled and the room is occupied.

Property Identifier	Property Datatype	Value	ASHRAE	IBOX
Object_Identifier	BACnetObjectIdentifier	(Analog Value, 1)	R	R
Object_Name	CharacterString	“OccupiedCoolSetPoint”	R	R
Object_Type	BACnetObjectType	ANALOG_VALUE (2)	R	R
Present_Value	REAL	0 .. 65535	R	R
Description	CharacterString	-	O	-
Status_Flags	BACnetStatusFlags	{FALSE, FALSE, FALSE, FALSE}	R	R
Event_State	BACnetEventState	STATE_NORMAL (0)	R	R
Reliability	BACnetReliability	NO_FAULT_DETECTED (0)	O	R
Out_Of_Service	BOOLEAN	FALSE	R	R
Update_Interval	Unsigned	-	O	-
Units	BACnetEngineeringUnits	Degrees Celsius (62)	R	R
Min_Pres_Value	REAL	-	O	-
Max_Pres_Value	REAL	-	O	-
Resolution	REAL	-	O	-
COV_Increment	REAL	0	O	W
Time_Delay	Unsigned	-	O	-
Notification_Class	Unsigned	-	O	-
High_Limit	REAL	-	O	-
Low_Limit	REAL	-	O	-
Deadband	REAL	-	O	-
Limit_Enable	BACnetLimitEnable	-	O	-
Event_Enable	BACnetEventTransitionBits	-	O	-
Acked_Transitions	BACnetEventTransitionBits	-	O	-
Notify_Type	BACnetNotifyType	-	O	-
Event_Time_Stamps	BACnetArray[N] of BACnetTimeStamp	-	O	-
Profile_Name	CharacterString	-	O	-

© HMS Industrial Networks S.L.U - All rights reserved
This information is subject to change without notice

5.3.23 OccupiedHeatSetPoint (Analog Value Object Type)

It indicates the current Setpoint when Heat mode is selected and Occupancy is enabled and the room is occupied.

Property Identifier	Property Datatype	Value	ASHRAE	IBOX
Object_Identifier	BACnetObjectIdentifier	(Analog Value, 2)	R	R
Object_Name	CharacterString	“OccupiedHeatSetPoint”	R	R
Object_Type	BACnetObjectType	ANALOG_VALUE (2)	R	R
Present_Value	REAL	0 .. 65535	R	R
Description	CharacterString	-	O	-
Status_Flags	BACnetStatusFlags	{FALSE, FALSE, FALSE, FALSE}	R	R
Event_State	BACnetEventState	STATE_NORMAL (0)	R	R
Reliability	BACnetReliability	NO_FAULT_DETECTED (0)	O	R
Out_Of_Service	BOOLEAN	FALSE	R	R
Update_Interval	Unsigned	-	O	-
Units	BACnetEngineeringUnits	Degrees Celsius (62)	R	R
Min_Pres_Value	REAL	-	O	-
Max_Pres_Value	REAL	-	O	-
Resolution	REAL	-	O	-
COV_Increment	REAL	0	O	W
Time_Delay	Unsigned	-	O	-
Notification_Class	Unsigned	-	O	-
High_Limit	REAL	-	O	-
Low_Limit	REAL	-	O	-
Deadband	REAL	-	O	-
Limit_Enable	BACnetLimitEnable	-	O	-
Event_Enable	BACnetEventTransitionBits	-	O	-
Acked_Transitions	BACnetEventTransitionBits	-	O	-
Notify_Type	BACnetNotifyType	-	O	-
Event_Time_Stamps	BACnetArray[N] of BACnetTimeStamp	-	O	-
Profile_Name	CharacterString	-	O	-

© HMS Industrial Networks S.L.U - All rights reserved
This information is subject to change without notice

5.3.24 UnoccupiedCoolSetPoint (Analog Value Object Type)

It indicates the current Setpoint when Cool mode is selected, Occupancy is enabled and the room is unoccupied.

Property Identifier	Property Datatype	Value	ASHRAE	IBOX
Object_Identifier	BACnetObjectIdentifier	(Analog Value, 3)	R	R
Object_Name	CharacterString	“UnoccupiedCoolSetPoint”	R	R
Object_Type	BACnetObjectType	ANALOG_VALUE (2)	R	R
Present_Value	REAL	0 .. 65535	R	R
Description	CharacterString	-	O	-
Status_Flags	BACnetStatusFlags	{FALSE, FALSE, FALSE, FALSE}	R	R
Event_State	BACnetEventState	STATE_NORMAL (0)	R	R
Reliability	BACnetReliability	NO_FAULT_DETECTED (0)	O	R
Out_Of_Service	BOOLEAN	FALSE	R	R
Update_Interval	Unsigned	-	O	-
Units	BACnetEngineeringUnits	Degrees Celsius (62)	R	R
Min_Pres_Value	REAL	-	O	-
Max_Pres_Value	REAL	-	O	-
Resolution	REAL	-	O	-
COV_Increment	REAL	0	O	W
Time_Delay	Unsigned	-	O	-
Notification_Class	Unsigned	-	O	-
High_Limit	REAL	-	O	-
Low_Limit	REAL	-	O	-
Deadband	REAL	-	O	-
Limit_Enable	BACnetLimitEnable	-	O	-
Event_Enable	BACnetEventTransitionBits	-	O	-
Acked_Transitions	BACnetEventTransitionBits	-	O	-
Notify_Type	BACnetNotifyType	-	O	-
Event_Time_Stamps	BACnetArray[N] of BACnetTimeStamp	-	O	-
Profile_Name	CharacterString	-	O	-

© HMS Industrial Networks S.L.U - All rights reserved
This information is subject to change without notice

5.3.25 UnoccupiedHeatSetPoint (Analog Value Object Type)

It indicates the current Setpoint when Heat mode is selected and Occupancy is enabled and the room is unoccupied.

Property Identifier	Property Datatype	Value	ASHRAE	IBOX
Object_Identifier	BACnetObjectIdentifier	(Analog Value, 4)	R	R
Object_Name	CharacterString	“UnoccupiedHeatSetPoint”	R	R
Object_Type	BACnetObjectType	ANALOG_VALUE (2)	R	R
Present_Value	REAL	0 .. 65535	R	R
Description	CharacterString	-	O	-
Status_Flags	BACnetStatusFlags	{FALSE, FALSE, FALSE, FALSE}	R	R
Event_State	BACnetEventState	STATE_NORMAL (0)	R	R
Reliability	BACnetReliability	NO_FAULT_DETECTED (0)	O	R
Out_Of_Service	BOOLEAN	FALSE	R	R
Update_Interval	Unsigned	-	O	-
Units	BACnetEngineeringUnits	Degrees Celsius (62)	R	R
Min_Pres_Value	REAL	-	O	-
Max_Pres_Value	REAL	-	O	-
Resolution	REAL	-	O	-
COV_Increment	REAL	0	O	W
Time_Delay	Unsigned	-	O	-
Notification_Class	Unsigned	-	O	-
High_Limit	REAL	-	O	-
Low_Limit	REAL	-	O	-
Deadband	REAL	-	O	-
Limit_Enable	BACnetLimitEnable	-	O	-
Event_Enable	BACnetEventTransitionBits	-	O	-
Acked_Transitions	BACnetEventTransitionBits	-	O	-
Notify_Type	BACnetNotifyType	-	O	-
Event_Time_Stamps	BACnetArray[N] of BACnetTimeStamp	-	O	-
Profile_Name	CharacterString	-	O	-

© HMS Industrial Networks S.L.U - All rights reserved
This information is subject to change without notice

5.3.26 OccupancyContinuousCheck (Binary Value Object Type)

It indicates if the system is continuously checking the setpoint and occupancy conditions.

Property Identifier	Property Datatype	Value	ASHRAE	IBOX
Object_Identifier	BACnetObjectIdentifier	(Binary Value, 0)	R	R
Object_Name	CharacterString	“OccupancyContinuousCheck”	R	R
Object_Type	BACnetObjectType	BINARY_VALUE (5)	R	R
Present_Value	BACnetBinaryPV	INACTIVE (0) / ACTIVE (1)	W	W
Description	CharacterString	-	O	-
Status_Flags	BACnetStatusFlags	{FALSE, FALSE, FALSE, FALSE}	R	R
Event_State	BACnetEventState	STATE_NORMAL (0)	R	R
Reliability	BACnetReliability	NO_FAULT_DETECTED (0)	O	R
Out_Of_Service	BOOLEAN	FALSE	R	R
Inactive_Text	CharacterString	"Disabled"	O	R
Active_Text	CharacterString	“Enabled"	O	R
Change_Of_State_Time	BACnetDatetime	-	O	-
Change_Of_State_Count	Unsigned	-	O	-
Time_Of_State_Count_Reset	BACnetDatetime	-	O	-
Elapsed_Active_Time	Unsigned	-	O	-
Time_Of_Active_Time_Reset	BACnetDatetime	-	O	-
Minimum_Off_Time	Unsigned32	-	O	-
Minimum_On_Time	Unsigned32	-	O	-
Priority_Array	BACnetPriorityArray	BACnetPriorityArray	R	-
Relinquish_Default	BACnetBinaryPV	INACTIVE (0)	R	-
Time_Delay	Unsigned	-	O	-
Notification_Class	Unsigned	-	O	-
Alarm_Value	BACnetBinaryPV	-	O	-
Event_Enable	BACnetEventTransitionBits	-	O	-
Acked_Transitions	BACnetEventTransitionBits	-	O	-
Notify_Type	BACnetNotifyType	-	O	-
Event_Time_Stamps	BACnetArray[N] of BACnetTimeStamp	-	O	-
Profile_Name	CharacterString	-	O	-

© HMS Industrial Networks S.L.U - All rights reserved
This information is subject to change without notice

5.3.27 UnoccupiedDeadbandAction (Binary Value Object Type)

It indicates the action to be performed by the system when Unoccupancy is enabled and Room Temperature is within the deadband.

Property Identifier	Property Datatype	Value	ASHRAE	IBOX
Object_Identifier	BACnetObjectIdentifier	(Binary Value, 1)	R	R
Object_Name	CharacterString	“UnoccupiedDeadbandAction”	R	R
Object_Type	BACnetObjectType	BINARY_VALUE (5)	R	R
Present_Value	BACnetBinaryPV	INACTIVE (0) / ACTIVE (1)	W	W
Description	CharacterString	-	O	-
Status_Flags	BACnetStatusFlags	{FALSE, FALSE, FALSE, FALSE}	R	R
Event_State	BACnetEventState	STATE_NORMAL (0)	R	R
Reliability	BACnetReliability	NO_FAULT_DETECTED (0)	O	R
Out_Of_Service	BOOLEAN	FALSE	R	R
Inactive_Text	CharacterString	"Off"	O	R
Active_Text	CharacterString	“CurrentMode"	O	R
Change_Of_State_Time	BACnetDatetime	-	O	-
Change_Of_State_Count	Unsigned	-	O	-
Time_Of_State_Count_Reset	BACnetDatetime	-	O	-
Elapsed_Active_Time	Unsigned	-	O	-
Time_Of_Active_Time_Reset	BACnetDatetime	-	O	-
Minimum_Off_Time	Unsigned32	-	O	-
Minimum_On_Time	Unsigned32	-	O	-
Priority_Array	BACnetPriorityArray	BACnetPriorityArray	R	-
Relinquish_Default	BACnetBinaryPV	INACTIVE (0)	R	-
Time_Delay	Unsigned	-	O	-
Notification_Class	Unsigned	-	O	-
Alarm_Value	BACnetBinaryPV	-	O	-
Event_Enable	BACnetEventTransitionBits	-	O	-
Acked_Transitions	BACnetEventTransitionBits	-	O	-
Notify_Type	BACnetNotifyType	-	O	-
Event_Time_Stamps	BACnetArray[N] ofBACnetTimeStamp	-	O	-
Profile_Name	CharacterString	-	O	-

© HMS Industrial Networks S.L.U - All rights reserved
This information is subject to change without notice

5.3.28 Runtime Mode Restriction (Multistate Input Object Type)

It indicates the runtime mode restriction in the AC system.

Property Identifier	Property Datatype	Value	ASHRAE	IBOX
Object_Identifier	BACnetObjectIdentifier	(Multi-state Input, 7)	R	R
Object_Name	CharacterString	“RuntimeModeRestriction”	R	R
Object_Type	BACnetObjectType	MULTISTATE_INPUT(13)	R	R
Present_Value	Unsigned	1 ~ 7	R	R
Description	CharacterString	-	O	-
Device_Type	CharacterString	-	O	-
Status_Flags	BACnetStatusFlags	{FALSE, FALSE, FALSE, FALSE}	R	R
Event_State	BACnetEventState	STATE_NORMAL (0)	R	R
Reliability	BACnetReliability	NO_FAULT_DETECTED (0)	O	R
Out_Of_Service	BOOLEAN	FALSE	R	R
Number_Of_States	Unsigned	7	R	R
State_Text	BACnetArray[N] of CharacterString	*Check **Runtime mode restriction table** below.*	O	R
Time_Delay	Unsigned	-	O	-
Notification_Class	Unsigned	-	O	-
Alarm_Values	List of Unsigned	-	O	-
Fault_Values	List of Unsigned	-	O	-
Event_Enable	BACnetEventTransitionBits	-	O	-
Acked_Transitions	BACnetEventTransitionBits	-	O	-
Notify_Type	BACnetNotifyType	-	O	-
Event_Time_Stamps	BACnetArray[N] of BACnetTimeStamp	-	O	-
Profile_Name	CharacterString	-	O	-

Runtime mode restriction state table:

Pesent_Value	State_Text
1	`None`
2	`Auto`
3	`Heat`
4	`Heat, Auto`
5	`Cool, Dry`
6	`Cool, Dry, Auto`
7	`Cool, Dry, Heat, Auto`

© HMS Industrial Networks S.L.U - All rights reserved
This information is subject to change without notice

5.3.29 Outdoor Demand Rate (Multistate Input Object Type)

It indicates the current outdoor demand rate in the AC system.

Property Identifier	Property Datatype	Value	ASHRAE	IBOX
Object_Identifier	BACnetObjectIdentifier	(Multi-state Input, 10)	R	R
Object_Name	CharacterString	"OutdoorDemandRate_status"	R	R
Object_Type	BACnetObjectType	MULTISTATE_INPUT(13)	R	R
Present_Value	Unsigned	1 ~ 3	R	R
Description	CharacterString	-	O	-
Device_Type	CharacterString	-	O	-
Status_Flags	BACnetStatusFlags	{FALSE, FALSE, FALSE, FALSE}	R	R
Event_State	BACnetEventState	STATE_NORMAL (0)	R	R
Reliability	BACnetReliability	NO_FAULT_DETECTED (0)	O	R
Out_Of_Service	BOOLEAN	FALSE	R	R
Number_Of_States	Unsigned	3	R	R
State_Text	BACnetArray[N] of CharacterString	*Check **Outdoor Demand rate table** below.*	O	R
Time_Delay	Unsigned	-	O	-
Notification_Class	Unsigned	-	O	-
Alarm_Values	List of Unsigned	-	O	-
Fault_Values	List of Unsigned	-	O	-
Event_Enable	BACnetEventTransitionBits	-	O	-
Acked_Transitions	BACnetEventTransitionBits	-	O	-
Notify_Type	BACnetNotifyType	-	O	-
Event_Time_Stamps	BACnetArray[N] of BACnetTimeStamp	-	O	-
Profile_Name	CharacterString	-	O	-

Outdoor demand rate table:

Pesent_Value	State_Text
1	Thermo Off
2	In range
3	No Limit

© HMS Industrial Networks S.L.U - All rights reserved
This information is subject to change without notice

5.3.30 Outdoor Demand Rate_command (Multistate Output Object Type)

It allows control the outdoor demand rate in the AC system.

Property Identifier	Property Datatype	Value	ASHRAE	IBOX
Object_Identifier	BACnetObjectIdentifier	(Multi-state Output, 7)	R	R
Object_Name	CharacterString	“OutdoorDemandRate_command”	R	R
Object_Type	BACnetObjectType	MULTISTATE_OUTPUT (14)	R	R
Present_Value	Unsigned	1 ~ 2	W	W
Description	CharacterString	-	O	-
Device_Type	CharacterString	-	O	-
Status_Flags	BACnetStatusFlags	{FALSE, FALSE, FALSE, FALSE}	R	R
Event_State	BACnetEventState	STATE_NORMAL (0)	R	R
Reliability	BACnetReliability	NO_FAULT_DETECTED (0)	O	R
Out_Of_Service	BOOLEAN	FALSE	R	R
Number_Of_States	Unsigned	2	R	R
State_Text	BACnetArray[N] of CharacterString	*Check **Outdoor demand rate_command table** below*	O	R
Priority_Array	BACnetPriorityArray	-	R	R
Relinquish_Default	Unsigned	-	R	R
Time_Delay	Unsigned	-	O	-
Notification_Class	Unsigned	-	O	-
Feedback_Value	Unsigned	-	O	-
Event_Enable	BACnetEventTransitionBits	-	O	-
Acked_Transitions	BACnetEventTransitionBits	-	O	-
Notify_Type	BACnetNotifyType	-	O	-
Event_Time_Stamps	BACnetArray[N] of BACnetTimeStamp	-	O	-
Profile_Name	CharacterString	-	O	-

Outdoor demand rate_command table

Outdoor demand rate can be set using the values in the following table.

Pesent_Value	Contents displayed in State_Text
1	Thermo Off
2	No Limit

© HMS Industrial Networks S.L.U - All rights reserved
This information is subject to change without notice

5.3.31 OutdoorDemandRateValue_status (Analog Input Object Type)

It indicates the outdoor demand rate value of the AC system.

Property Identifier	Property Datatype	Value	ASHRAE	IBOX
Object_Identifier	BACnetObjectIdentifier	(Analog Input, 12)	R	R
Object_Name	CharacterString	“OutdoorDemandRateValue_status”	R	R
Object_Type	BACnetObjectType	ANALOG_INPUT (0)	R	R
Present_Value*	REAL		R	R
Description	CharacterString	-	O	-
Device_Type	CharacterString	-	O	-
Status_Flags	BACnetStatusFlags	{FALSE, FALSE/TRUE, FALSE, FALSE}	R	R
Event_State	BACnetEventState	STATE_NORMAL (0)	R	R
Reliability	BACnetReliability	NO_FAULT_DETECTED (0), UNRELIABLE_OTHER (7)	O	R
Out_Of_Service	BOOLEAN	FALSE	R	R
Update_Interval	Unsigned	-	O	-
Units	BACnetEngineeringUnits	Percentage % (98)	R	R
Min_Pres_Value *	REAL		O	R
Max_Pres_Value *	REAL		O	R
Resolution	REAL	-	O	-
COV_Increment	REAL	0	O	W
Time_Delay	Unsigned	-	O	-
Notification_Class	Unsigned	-	O	-
High_Limit	REAL	-	O	-
Low_Limit	REAL	-	O	-
Deadband	REAL	-	O	-
Limit_Enable	BACnetLimitEnable	-	O	-
Event_Enable	BACnetEventTransitionBits	-	O	-
Acked_Transitions	BACnetEventTransitionBits	-	O	-
Notify_Type	BACnetNotifyType	-	O	-
Event_Time_Stamps	BACnetArray[N] of BACnetTimeStamp	-	O	-
Profile_Name	CharacterString	-	O	-

© HMS Industrial Networks S.L.U - All rights reserved
This information is subject to change without notice

5.3.32 OutdooorDemandRateValue_command (Analog Output Object Type)

It sets the desired outdoor demand rate velue in the AC system.

Property Identifier	Property Datatype	Value	ASHRAE	IBOX
Object_Identifier	BACnetObjectIdentifier	(Analog Output, 2)	R	R
Object_Name	CharacterString	“OutdooorDemandRateValue_command”	R	R
Object_Type	BACnetObjectType	ANALOG_OUTPUT (1)	R	R
Present_Value *	REAL	16…31 ºC	R	R
Description	CharacterString	-	O	-
Device_Type	CharacterString	-	O	-
Status_Flags	BACnetStatusFlags	{FALSE, FALSE, FALSE, FALSE}	R	R
Event_State	BACnetEventState	STATE_NORMAL (0)	R	R
Reliability	BACnetReliability	NO_FAULT_DETECTED (0)	O	R
Out_Of_Service	BOOLEAN	FALSE	R	R
Update_Interval	Unsigned	-	O	-
Units	BACnetEngineeringUnits	Percentage % (98)	R	R
Min_Pres_Value	REAL		O	R
Max_Pres_Value	REAL		O	R
Resolution	REAL	-	O	-
COV_Increment	REAL	0	O	W
Priority_Array	BACnetPriorityArray	BACnetPriorityArray	R	R
Relinquish_Default	Unsigned		R	R
Time_Delay	Unsigned	-	O	-
Notification_Class	Unsigned	-	O	-
High_Limit	REAL	-	O	-
Low_Limit	REAL	-	O	-
Deadband	REAL	-	O	-
Limit_Enable	BACnetLimitEnable	-	O	-
Event_Enable	BACnetEventTransitionBits	-	O	-
Acked_Transitions	BACnetEventTransitionBits	-	O	-
Notify_Type	BACnetNotifyType	-	O	-
Event_Time_Stamps	BACnetArray[N] of BACnetTimeStamp	-	O	-
Profile_Name	CharacterString	-	O	-

* Use of Celsius or Fahrenheits units can be selected throught the switch configuration. Check section 6.1 for more information.

© HMS Industrial Networks S.L.U - All rights reserved
This information is subject to change without notice

5.3.33 LockRemoteControlAll_status (Binary Input Object Type)

It indicates if lock all remote-control signal is active or not.

Property Identifier	Property Datatype	Value	ASHRAE	IBOX
Object_Identifier	BACnetObjectIdentifier	(Binary Input, 8)	R	R
Object_Name	CharacterString	“LockRemoteControlAll_status”	R	R
Object_Type	BACnetObjectType	BINARY_INPUT (3)	R	R
Present_Value	BACnetBinaryPV	INACTIVE (0) / ACTIVE (1)	R	R
Description	CharacterString	-	O	-
Device_Type	CharacterString	-	O	-
Status_Flags	BACnetStatusFlags	{FALSE, FALSE, FALSE, FALSE}	R	R
Event_State	BACnetEventState	STATE_NORMAL (0)	R	R
Reliability	BACnetReliability	NO_FAULT_DETECTED (0)	O	R
Out_Of_Service	BOOLEAN	FALSE	R	R
Polarity	BACnetPolarity	NORMAL (0)	R	R
Inactive_Text	CharacterString	"Unlocked"	O	R
Active_Text	CharacterString	“Locked”	O	R
Change_Of_State_Time	BACnetDatetime	-	O	-
Change_Of_State_Count	Unsigned	-	O	-
Time_Of_State_Count_Reset	BACnetDatetime	-	O	-
Elapsed_Active_Time	Unsigned	-	O	-
Time_Of_Active_Time_Reset	BACnetDatetime	-	O	-
Time_Delay	Unsigned	-	O	-
Notification_Class	Unsigned	-	O	-
Alarm_Value	BACnetBinaryPV	-	O	-
Event_Enable	BACnetEventTransitionBits	-	O	-
Acked_Transitions	BACnetEventTransitionBits	-	O	-
Notify_Type	BACnetNotifyType	-	O	-
Event_Time_Stamps	BACnetArray[N] of BACnetTimeStamp	-	O	-
Profile_Name	CharacterString	-	O	-

© HMS Industrial Networks S.L.U - All rights reserved
This information is subject to change without notice

5.3.34 LockRemoteControlAll_command (Binary Output Object Type)

It activates or deactivates lock all remote-control signal.

Property Identifier	Property Datatype	Value	ASHRAE	IBOX
Object_Identifier	BACnetObjectIdentifier	(Binary Output, 6)	R	R
Object_Name	CharacterString	“LockRemoteControlAll_command”	R	R
Object_Type	BACnetObjectType	BINARY_OUTPUT (4)	R	R
Present_Value	BACnetBinaryPV	INACTIVE (0) / ACTIVE (1)	W	W
Description	CharacterString	-	O	-
Device_Type	CharacterString	-	O	-
Status_Flags	BACnetStatusFlags	{FALSE, FALSE, FALSE, FALSE}	R	R
Event_State	BACnetEventState	STATE_NORMAL (0)	R	R
Reliability	BACnetReliability	NO_FAULT_DETECTED (0)	O	R
Out_Of_Service	BOOLEAN	FALSE	R	R
Polarity	BACnetPolarity	NORMAL (0)	R	R
Inactive_Text	CharacterString	"Unlocked"	O	R
Active_Text	CharacterString	“Locked"	O	R
Change_Of_State_Time	BACnetDatetime	-	O	-
Change_Of_State_Count	Unsigned	-	O	-
Time_Of_State_Count_Reset	BACnetDatetime	-	O	-
Elapsed_Active_Time	Unsigned	-	O	-
Time_Of_Active_Time_Reset	BACnetDatetime	-	O	-
Minimum_Off_Time	Unsigned32	-	O	-
Minimum_On_Time	Unsigned32	-	O	-
Priority_Array	BACnetPriorityArray	BACnetPriorityArray	R	R
Relinquish_Default	BACnetBinaryPV	INACTIVE (0)	R	R
Time_Delay	Unsigned	-	O	-
Notification_Class	Unsigned	-	O	-
Feedback_Value	BACnetBinaryPV	-	O	-
Event_Enable	BACnetEventTransitionBits	-	O	-
Acked_Transitions	BACnetEventTransitionBits	-	O	-
Notify_Type	BACnetNotifyType	-	O	-
Event_Time_Stamps	BACnetArray[N] of BACnetTimeStamp	-	O	-
Profile_Name	CharacterString	-	O	-

© HMS Industrial Networks S.L.U - All rights reserved
This information is subject to change without notice

5.3.35 LockRemoteControlOnOff_status (Binary Input Object Type)

It indicates if lock on/off remote-control signal is active or not.

Property Identifier	Property Datatype	Value	ASHRAE	IBOX
Object_Identifier	BACnetObjectIdentifier	(Binary Input, 9)	R	R
Object_Name	CharacterString	“LockRemoteControlOnOff_status”	R	R
Object_Type	BACnetObjectType	BINARY_INPUT (3)	R	R
Present_Value	BACnetBinaryPV	INACTIVE (0) / ACTIVE (1)	R	R
Description	CharacterString	-	O	-
Device_Type	CharacterString	-	O	-
Status_Flags	BACnetStatusFlags	{FALSE, FALSE, FALSE, FALSE}	R	R
Event_State	BACnetEventState	STATE_NORMAL (0)	R	R
Reliability	BACnetReliability	NO_FAULT_DETECTED (0)	O	R
Out_Of_Service	BOOLEAN	FALSE	R	R
Polarity	BACnetPolarity	NORMAL (0)	R	R
Inactive_Text	CharacterString	"Unlocked"	O	R
Active_Text	CharacterString	“Locked”	O	R
Change_Of_State_Time	BACnetDatetime	-	O	-
Change_Of_State_Count	Unsigned	-	O	-
Time_Of_State_Count_Reset	BACnetDatetime	-	O	-
Elapsed_Active_Time	Unsigned	-	O	-
Time_Of_Active_Time_Reset	BACnetDatetime	-	O	-
Time_Delay	Unsigned	-	O	-
Notification_Class	Unsigned	-	O	-
Alarm_Value	BACnetBinaryPV	-	O	-
Event_Enable	BACnetEventTransitionBits	-	O	-
Acked_Transitions	BACnetEventTransitionBits	-	O	-
Notify_Type	BACnetNotifyType	-	O	-
Event_Time_Stamps	BACnetArray[N] of BACnetTimeStamp	-	O	-
Profile_Name	CharacterString	-	O	-

© HMS Industrial Networks S.L.U - All rights reserved
This information is subject to change without notice

5.3.36 LockRemoteControlOnOff_command (Binary Output Object Type)

It activates or deactivates lock on/off remote-control signal.

Property Identifier	Property Datatype	Value	ASHRAE	IBOX
Object_Identifier	BACnetObjectIdentifier	(Binary Output, 7)	R	R
Object_Name	CharacterString	“LockRemoteControlOnOff_command”	R	R
Object_Type	BACnetObjectType	BINARY_OUTPUT (4)	R	R
Present_Value	BACnetBinaryPV	INACTIVE (0) / ACTIVE (1)	W	W
Description	CharacterString	-	O	-
Device_Type	CharacterString	-	O	-
Status_Flags	BACnetStatusFlags	{FALSE, FALSE, FALSE, FALSE}	R	R
Event_State	BACnetEventState	STATE_NORMAL (0)	R	R
Reliability	BACnetReliability	NO_FAULT_DETECTED (0)	O	R
Out_Of_Service	BOOLEAN	FALSE	R	R
Polarity	BACnetPolarity	NORMAL (0)	R	R
Inactive_Text	CharacterString	"Unlocked"	O	R
Active_Text	CharacterString	“Locked"	O	R
Change_Of_State_Time	BACnetDatetime	-	O	-
Change_Of_State_Count	Unsigned	-	O	-
Time_Of_State_Count_Reset	BACnetDatetime	-	O	-
Elapsed_Active_Time	Unsigned	-	O	-
Time_Of_Active_Time_Reset	BACnetDatetime	-	O	-
Minimum_Off_Time	Unsigned32	-	O	-
Minimum_On_Time	Unsigned32	-	O	-
Priority_Array	BACnetPriorityArray	BACnetPriorityArray	R	R
Relinquish_Default	BACnetBinaryPV	INACTIVE (0)	R	R
Time_Delay	Unsigned	-	O	-
Notification_Class	Unsigned	-	O	-
Feedback_Value	BACnetBinaryPV	-	O	-
Event_Enable	BACnetEventTransitionBits	-	O	-
Acked_Transitions	BACnetEventTransitionBits	-	O	-
Notify_Type	BACnetNotifyType	-	O	-
Event_Time_Stamps	BACnetArray[N] of BACnetTimeStamp	-	O	-
Profile_Name	CharacterString	-	O	-

© HMS Industrial Networks S.L.U - All rights reserved
This information is subject to change without notice

5.3.37 LockRemoteControlMode_status (Binary Input Object Type)

It indicates if lock mode remote-control signal is active or not.

Property Identifier	Property Datatype	Value	ASHRAE	IBOX
Object_Identifier	BACnetObjectIdentifier	(Binary Input, 10)	R	R
Object_Name	CharacterString	“LockRemoteControlMode_status”	R	R
Object_Type	BACnetObjectType	BINARY_INPUT (3)	R	R
Present_Value	BACnetBinaryPV	INACTIVE (0) / ACTIVE (1)	R	R
Description	CharacterString	-	O	-
Device_Type	CharacterString	-	O	-
Status_Flags	BACnetStatusFlags	{FALSE, FALSE, FALSE, FALSE}	R	R
Event_State	BACnetEventState	STATE_NORMAL (0)	R	R
Reliability	BACnetReliability	NO_FAULT_DETECTED (0)	O	R
Out_Of_Service	BOOLEAN	FALSE	R	R
Polarity	BACnetPolarity	NORMAL (0)	R	R
Inactive_Text	CharacterString	"Unlocked"	O	R
Active_Text	CharacterString	“Locked”	O	R
Change_Of_State_Time	BACnetDatetime	-	O	-
Change_Of_State_Count	Unsigned	-	O	-
Time_Of_State_Count_Reset	BACnetDatetime	-	O	-
Elapsed_Active_Time	Unsigned	-	O	-
Time_Of_Active_Time_Reset	BACnetDatetime	-	O	-
Time_Delay	Unsigned	-	O	-
Notification_Class	Unsigned	-	O	-
Alarm_Value	BACnetBinaryPV	-	O	-
Event_Enable	BACnetEventTransitionBits	-	O	-
Acked_Transitions	BACnetEventTransitionBits	-	O	-
Notify_Type	BACnetNotifyType	-	O	-
Event_Time_Stamps	BACnetArray[N] of BACnetTimeStamp	-	O	-
Profile_Name	CharacterString	-	O	-

© HMS Industrial Networks S.L.U - All rights reserved
This information is subject to change without notice

5.3.38 LockRemoteControlMode_command (Binary Output Object Type)

It activates or deactivates lock mode remote-control signal.

Property Identifier	Property Datatype	Value	ASHRAE	IBOX
Object_Identifier	BACnetObjectIdentifier	(Binary Output, 8)	R	R
Object_Name	CharacterString	“LockRemoteControlMode_command”	R	R
Object_Type	BACnetObjectType	BINARY_OUTPUT (4)	R	R
Present_Value	BACnetBinaryPV	INACTIVE (0) / ACTIVE (1)	W	W
Description	CharacterString	-	O	-
Device_Type	CharacterString	-	O	-
Status_Flags	BACnetStatusFlags	{FALSE, FALSE, FALSE, FALSE}	R	R
Event_State	BACnetEventState	STATE_NORMAL (0)	R	R
Reliability	BACnetReliability	NO_FAULT_DETECTED (0)	O	R
Out_Of_Service	BOOLEAN	FALSE	R	R
Polarity	BACnetPolarity	NORMAL (0)	R	R
Inactive_Text	CharacterString	"Unlocked"	O	R
Active_Text	CharacterString	“Locked"	O	R
Change_Of_State_Time	BACnetDatetime	-	O	-
Change_Of_State_Count	Unsigned	-	O	-
Time_Of_State_Count_Reset	BACnetDatetime	-	O	-
Elapsed_Active_Time	Unsigned	-	O	-
Time_Of_Active_Time_Reset	BACnetDatetime	-	O	-
Minimum_Off_Time	Unsigned32	-	O	-
Minimum_On_Time	Unsigned32	-	O	-
Priority_Array	BACnetPriorityArray	BACnetPriorityArray	R	R
Relinquish_Default	BACnetBinaryPV	INACTIVE (0)	R	R
Time_Delay	Unsigned	-	O	-
Notification_Class	Unsigned	-	O	-
Feedback_Value	BACnetBinaryPV	-	O	-
Event_Enable	BACnetEventTransitionBits	-	O	-
Acked_Transitions	BACnetEventTransitionBits	-	O	-
Notify_Type	BACnetNotifyType	-	O	-
Event_Time_Stamps	BACnetArray[N] of BACnetTimeStamp	-	O	-
Profile_Name	CharacterString	-	O	-

© HMS Industrial Networks S.L.U - All rights reserved
This information is subject to change without notice

5.3.39 LockRemoteControlSetPoint_status (Binary Input Object Type)

It indicates if lock setpoint remote-control signal is active or not.

Property Identifier	Property Datatype	Value	ASHRAE	IBOX
Object_Identifier	BACnetObjectIdentifier	(Binary Input, 11)	R	R
Object_Name	CharacterString	“LockRemoteControlSetPoint_status”	R	R
Object_Type	BACnetObjectType	BINARY_INPUT (3)	R	R
Present_Value	BACnetBinaryPV	INACTIVE (0) / ACTIVE (1)	R	R
Description	CharacterString	-	O	-
Device_Type	CharacterString	-	O	-
Status_Flags	BACnetStatusFlags	{FALSE, FALSE, FALSE, FALSE}	R	R
Event_State	BACnetEventState	STATE_NORMAL (0)	R	R
Reliability	BACnetReliability	NO_FAULT_DETECTED (0)	O	R
Out_Of_Service	BOOLEAN	FALSE	R	R
Polarity	BACnetPolarity	NORMAL (0)	R	R
Inactive_Text	CharacterString	"Unlocked"	O	R
Active_Text	CharacterString	“Locked”	O	R
Change_Of_State_Time	BACnetDatetime	-	O	-
Change_Of_State_Count	Unsigned	-	O	-
Time_Of_State_Count_Reset	BACnetDatetime	-	O	-
Elapsed_Active_Time	Unsigned	-	O	-
Time_Of_Active_Time_Reset	BACnetDatetime	-	O	-
Time_Delay	Unsigned	-	O	-
Notification_Class	Unsigned	-	O	-
Alarm_Value	BACnetBinaryPV	-	O	-
Event_Enable	BACnetEventTransitionBits	-	O	-
Acked_Transitions	BACnetEventTransitionBits	-	O	-
Notify_Type	BACnetNotifyType	-	O	-
Event_Time_Stamps	BACnetArray[N] of BACnetTimeStamp	-	O	-
Profile_Name	CharacterString	-	O	-

© HMS Industrial Networks S.L.U - All rights reserved
This information is subject to change without notice

5.3.40 LockRemoteControlSetPoint_command (Binary Output Object Type)

It activates or deactivates lock setpoint remote-control signal.

Property Identifier	Property Datatype	Value	ASHRAE	IBOX
Object_Identifier	BACnetObjectIdentifier	(Binary Output, 9)	R	R
Object_Name	CharacterString	“LockRemoteControlSetPoint_command”	R	R
Object_Type	BACnetObjectType	BINARY_OUTPUT (4)	R	R
Present_Value	BACnetBinaryPV	INACTIVE (0) / ACTIVE (1)	W	W
Description	CharacterString	-	O	-
Device_Type	CharacterString	-	O	-
Status_Flags	BACnetStatusFlags	{FALSE, FALSE, FALSE, FALSE}	R	R
Event_State	BACnetEventState	STATE_NORMAL (0)	R	R
Reliability	BACnetReliability	NO_FAULT_DETECTED (0)	O	R
Out_Of_Service	BOOLEAN	FALSE	R	R
Polarity	BACnetPolarity	NORMAL (0)	R	R
Inactive_Text	CharacterString	"Unlocked"	O	R
Active_Text	CharacterString	“Locked"	O	R
Change_Of_State_Time	BACnetDatetime	-	O	-
Change_Of_State_Count	Unsigned	-	O	-
Time_Of_State_Count_Reset	BACnetDatetime	-	O	-
Elapsed_Active_Time	Unsigned	-	O	-
Time_Of_Active_Time_Reset	BACnetDatetime	-	O	-
Minimum_Off_Time	Unsigned32	-	O	-
Minimum_On_Time	Unsigned32	-	O	-
Priority_Array	BACnetPriorityArray	BACnetPriorityArray	R	R
Relinquish_Default	BACnetBinaryPV	INACTIVE (0)	R	R
Time_Delay	Unsigned	-	O	-
Notification_Class	Unsigned	-	O	-
Feedback_Value	BACnetBinaryPV	-	O	-
Event_Enable	BACnetEventTransitionBits	-	O	-
Acked_Transitions	BACnetEventTransitionBits	-	O	-
Notify_Type	BACnetNotifyType	-	O	-
Event_Time_Stamps	BACnetArray[N] of BACnetTimeStamp	-	O	-
Profile_Name	CharacterString	-	O	-

© HMS Industrial Networks S.L.U - All rights reserved
This information is subject to change without notice

5.3.41 LockRemoteControlFanSpeed_status (Binary Input Object Type)

It indicates if lock fan speed remote-control signal is active or not.

Property Identifier	Property Datatype	Value	ASHRAE	IBOX
Object_Identifier	BACnetObjectIdentifier	(Binary Input, 12)	R	R
Object_Name	CharacterString	“LockRemoteControlFanSpeed_status”	R	R
Object_Type	BACnetObjectType	BINARY_INPUT (3)	R	R
Present_Value	BACnetBinaryPV	INACTIVE (0) / ACTIVE (1)	R	R
Description	CharacterString	-	O	-
Device_Type	CharacterString	-	O	-
Status_Flags	BACnetStatusFlags	{FALSE, FALSE, FALSE, FALSE}	R	R
Event_State	BACnetEventState	STATE_NORMAL (0)	R	R
Reliability	BACnetReliability	NO_FAULT_DETECTED (0)	O	R
Out_Of_Service	BOOLEAN	FALSE	R	R
Polarity	BACnetPolarity	NORMAL (0)	R	R
Inactive_Text	CharacterString	"Unlocked"	O	R
Active_Text	CharacterString	“Locked”	O	R
Change_Of_State_Time	BACnetDatetime	-	O	-
Change_Of_State_Count	Unsigned	-	O	-
Time_Of_State_Count_Reset	BACnetDatetime	-	O	-
Elapsed_Active_Time	Unsigned	-	O	-
Time_Of_Active_Time_Reset	BACnetDatetime	-	O	-
Time_Delay	Unsigned	-	O	-
Notification_Class	Unsigned	-	O	-
Alarm_Value	BACnetBinaryPV	-	O	-
Event_Enable	BACnetEventTransitionBits	-	O	-
Acked_Transitions	BACnetEventTransitionBits	-	O	-
Notify_Type	BACnetNotifyType	-	O	-
Event_Time_Stamps	BACnetArray[N] of BACnetTimeStamp	-	O	-
Profile_Name	CharacterString	-	O	-

© HMS Industrial Networks S.L.U - All rights reserved
This information is subject to change without notice

5.3.42 LockRemoteControlFanSpeed_command (Binary Output Object Type)

It activates or deactivates lock fan speed remote-control signal.

Property Identifier	Property Datatype	Value	ASHRAE	IBOX
Object_Identifier	BACnetObjectIdentifier	(Binary Output, 10)	R	R
Object_Name	CharacterString	“LockRemoteControlFanSpeed_command”	R	R
Object_Type	BACnetObjectType	BINARY_OUTPUT (4)	R	R
Present_Value	BACnetBinaryPV	INACTIVE (0) / ACTIVE (1)	W	W
Description	CharacterString	-	O	-
Device_Type	CharacterString	-	O	-
Status_Flags	BACnetStatusFlags	{FALSE, FALSE, FALSE, FALSE}	R	R
Event_State	BACnetEventState	STATE_NORMAL (0)	R	R
Reliability	BACnetReliability	NO_FAULT_DETECTED (0)	O	R
Out_Of_Service	BOOLEAN	FALSE	R	R
Polarity	BACnetPolarity	NORMAL (0)	R	R
Inactive_Text	CharacterString	"Unlocked"	O	R
Active_Text	CharacterString	“Locked"	O	R
Change_Of_State_Time	BACnetDatetime	-	O	-
Change_Of_State_Count	Unsigned	-	O	-
Time_Of_State_Count_Reset	BACnetDatetime	-	O	-
Elapsed_Active_Time	Unsigned	-	O	-
Time_Of_Active_Time_Reset	BACnetDatetime	-	O	-
Minimum_Off_Time	Unsigned32	-	O	-
Minimum_On_Time	Unsigned32	-	O	-
Priority_Array	BACnetPriorityArray	BACnetPriorityArray	R	R
Relinquish_Default	BACnetBinaryPV	INACTIVE (0)	R	R
Time_Delay	Unsigned	-	O	-
Notification_Class	Unsigned	-	O	-
Feedback_Value	BACnetBinaryPV	-	O	-
Event_Enable	BACnetEventTransitionBits	-	O	-
Acked_Transitions	BACnetEventTransitionBits	-	O	-
Notify_Type	BACnetNotifyType	-	O	-
Event_Time_Stamps	BACnetArray[N] of BACnetTimeStamp	-	O	-
Profile_Name	CharacterString	-	O	-

© HMS Industrial Networks S.L.U - All rights reserved
This information is subject to change without notice

5.3.43 LockRemoteControlVanesUD_status (Binary Input Object Type)

It indicates if lock vanes up/down remote-control signal is active or not.

Property Identifier	Property Datatype	Value	ASHRAE	IBOX
Object_Identifier	BACnetObjectIdentifier	(Binary Input, 13)	R	R
Object_Name	CharacterString	“LockRemoteControlVanesUD_status”	R	R
Object_Type	BACnetObjectType	BINARY_INPUT (3)	R	R
Present_Value	BACnetBinaryPV	INACTIVE (0) / ACTIVE (1)	R	R
Description	CharacterString	-	O	-
Device_Type	CharacterString	-	O	-
Status_Flags	BACnetStatusFlags	{FALSE, FALSE, FALSE, FALSE}	R	R
Event_State	BACnetEventState	STATE_NORMAL (0)	R	R
Reliability	BACnetReliability	NO_FAULT_DETECTED (0)	O	R
Out_Of_Service	BOOLEAN	FALSE	R	R
Polarity	BACnetPolarity	NORMAL (0)	R	R
Inactive_Text	CharacterString	"Unlocked"	O	R
Active_Text	CharacterString	“Locked”	O	R
Change_Of_State_Time	BACnetDatetime	-	O	-
Change_Of_State_Count	Unsigned	-	O	-
Time_Of_State_Count_Reset	BACnetDatetime	-	O	-
Elapsed_Active_Time	Unsigned	-	O	-
Time_Of_Active_Time_Reset	BACnetDatetime	-	O	-
Time_Delay	Unsigned	-	O	-
Notification_Class	Unsigned	-	O	-
Alarm_Value	BACnetBinaryPV	-	O	-
Event_Enable	BACnetEventTransitionBits	-	O	-
Acked_Transitions	BACnetEventTransitionBits	-	O	-
Notify_Type	BACnetNotifyType	-	O	-
Event_Time_Stamps	BACnetArray[N] of BACnetTimeStamp	-	O	-
Profile_Name	CharacterString	-	O	-

© HMS Industrial Networks S.L.U - All rights reserved
This information is subject to change without notice

5.3.44 LockRemoteControlVanesUD_command (Binary Output Object Type)

It activates or deactivates lock vanes up/down remote-control signal.

Property Identifier	Property Datatype	Value	ASHRAE	IBOX
Object_Identifier	BACnetObjectIdentifier	(Binary Output, 11)	R	R
Object_Name	CharacterString	“FilterReset”	R	R
Object_Type	BACnetObjectType	BINARY_OUTPUT (4)	R	R
Present_Value	BACnetBinaryPV	INACTIVE (0) / ACTIVE (1)	W	W
Description	CharacterString	-	O	-
Device_Type	CharacterString	-	O	-
Status_Flags	BACnetStatusFlags	{FALSE, FALSE, FALSE, FALSE}	R	R
Event_State	BACnetEventState	STATE_NORMAL (0)	R	R
Reliability	BACnetReliability	NO_FAULT_DETECTED (0)	O	R
Out_Of_Service	BOOLEAN	FALSE	R	R
Polarity	BACnetPolarity	NORMAL (0)	R	R
Inactive_Text	CharacterString	"Unlocked"	O	R
Active_Text	CharacterString	“Locked"	O	R
Change_Of_State_Time	BACnetDatetime	-	O	-
Change_Of_State_Count	Unsigned	-	O	-
Time_Of_State_Count_Reset	BACnetDatetime	-	O	-
Elapsed_Active_Time	Unsigned	-	O	-
Time_Of_Active_Time_Reset	BACnetDatetime	-	O	-
Minimum_Off_Time	Unsigned32	-	O	-
Minimum_On_Time	Unsigned32	-	O	-
Priority_Array	BACnetPriorityArray	BACnetPriorityArray	R	R
Relinquish_Default	BACnetBinaryPV	INACTIVE (0)	R	R
Time_Delay	Unsigned	-	O	-
Notification_Class	Unsigned	-	O	-
Feedback_Value	BACnetBinaryPV	-	O	-
Event_Enable	BACnetEventTransitionBits	-	O	-
Acked_Transitions	BACnetEventTransitionBits	-	O	-
Notify_Type	BACnetNotifyType	-	O	-
Event_Time_Stamps	BACnetArray[N] of BACnetTimeStamp	-	O	-
Profile_Name	CharacterString	-	O	-

© HMS Industrial Networks S.L.U - All rights reserved
This information is subject to change without notice

5.3.45 DIP_SW_S1_status (Analog Input Object Type)

It indicates the status of the DIP switch 1 in decimal value. To get the micro-switch position, just translate the value into binary. It is only read after booting the device.

Property Identifier	Property Datatype	Value	ASHRAE	IBOX
Object_Identifier	BACnetObjectIdentifier	(Analog Input, 9)	R	R
Object_Name	CharacterString	“DIP_SW_S1_status”	R	R
Object_Type	BACnetObjectType	ANALOG_INPUT (0)	R	R
Present_Value	BACnetBinaryPV	0…255*	R	R
Description	CharacterString	-	O	-
Device_Type	CharacterString	-	O	-
Status_Flags	BACnetStatusFlags	{FALSE, FALSE, FALSE, FALSE}	R	R
Event_State	BACnetEventState	STATE_NORMAL (0)	R	R
Reliability	BACnetReliability	NO_FAULT_DETECTED (0)	O	R
Out_Of_Service	BOOLEAN	FALSE / TRUE	R	R
Polarity	BACnetPolarity	NORMAL (0)	R	R
Inactive_Text	CharacterString		O	R
Active_Text	CharacterString		O	R
Change_Of_State_Time	BACnetDatetime	-	O	-
Change_Of_State_Count	Unsigned	-	O	-
Time_Of_State_Count_Reset	BACnetDatetime	-	O	-
Elapsed_Active_Time	Unsigned	-	O	-
Time_Of_Active_Time_Reset	BACnetDatetime	-	O	-
Time_Delay	Unsigned	-	O	-
Notification_Class	Unsigned	-	O	-
Alarm_Value	BACnetBinaryPV	-	O	-
Event_Enable	BACnetEventTransitionBits	-	O	-
Acked_Transitions	BACnetEventTransitionBits	-	O	-
Notify_Type	BACnetNotifyType	-	O	-
Event_Time_Stamps	BACnetArray[N] of BACnetTimeStamp	-	O	-
Profile_Name	CharacterString	-	O	-
Units	BACnetEngineeringUnits	No units (95)	R	R
COV_Increment	REAL	0	O	W

© HMS Industrial Networks S.L.U - All rights reserved
This information is subject to change without notice

5.3.46 DIP_SW_S2_status (Analog Input Object Type)

It indicates the status of the DIP switch 2 in decimal value. To get the micro-switch position, just translate the value into binary. It is only read after booting the device.

Property Identifier	Property Datatype	Value	ASHRAE	IBOX
Object_Identifier	BACnetObjectIdentifier	(Analog Input, 10)	R	R
Object_Name	CharacterString	DIP_SW_S2_status	R	R
Object_Type	BACnetObjectType	ANALOG_INPUT (0)	R	R
Present_Value	BACnetBinaryPV	0…255*	R	R
Description	CharacterString	-	O	-
Device_Type	CharacterString	-	O	-
Status_Flags	BACnetStatusFlags	{FALSE, FALSE, FALSE, FALSE}	R	R
Event_State	BACnetEventState	STATE_NORMAL (0)	R	R
Reliability	BACnetReliability	NO_FAULT_DETECTED (0)	O	R
Out_Of_Service	BOOLEAN	FALSE	R	R
Polarity	BACnetPolarity	NORMAL (0)	R	R
Inactive_Text	CharacterString		O	R
Active_Text	CharacterString		O	R
Change_Of_State_Time	BACnetDatetime	-	O	-
Change_Of_State_Count	Unsigned	-	O	-
Time_Of_State_Count_Reset	BACnetDatetime	-	O	-
Elapsed_Active_Time	Unsigned	-	O	-
Time_Of_Active_Time_Reset	BACnetDatetime	-	O	-
Time_Delay	Unsigned	-	O	-
Notification_Class	Unsigned	-	O	-
Alarm_Value	BACnetBinaryPV	-	O	-
Event_Enable	BACnetEventTransitionBits	-	O	-
Acked_Transitions	BACnetEventTransitionBits	-	O	-
Notify_Type	BACnetNotifyType	-	O	-
Event_Time_Stamps	BACnetArray[N] of BACnetTimeStamp	-	O	-
Profile_Name	CharacterString	-	O	-
Units	BACnetEngineeringUnits	No units (95)	R	R
COV_Increment	REAL	0	O	W

© HMS Industrial Networks S.L.U - All rights reserved
This information is subject to change without notice

5.3.47 SerialNumber (Analog Input Object Type)

It indicates the serial number of the device. Serial number follows the next rule **000KXXXXX**, where:

- **000K** is constant and no included in Present Value property.
- **XXXXX** is the unique serial number of the device. It is the information provided through the Present Value.

Property Identifier	Property Datatype	Value	ASHRAE	IBOX
Object_Identifier	BACnetObjectIdentifier	(Analog Input, 11)	R	R
Object_Name	CharacterString	SerialNumber	R	R
Object_Type	BACnetObjectType	ANALOG_INPUT (0)	R	R
Present_Value	BACnetBinaryPV	00000…99999	R	R
Description	CharacterString	-	O	-
Device_Type	CharacterString	-	O	-
Status_Flags	BACnetStatusFlags	{FALSE, FALSE, FALSE, FALSE}	R	R
Event_State	BACnetEventState	STATE_NORMAL (0)	R	R
Reliability	BACnetReliability	NO_FAULT_DETECTED (0)	O	R
Out_Of_Service	BOOLEAN	FALSE	R	R
Polarity	BACnetPolarity	NORMAL (0)	R	R
Inactive_Text	CharacterString		O	R
Active_Text	CharacterString		O	R
Change_Of_State_Time	BACnetDatetime	-	O	-
Change_Of_State_Count	Unsigned	-	O	-
Time_Of_State_Count_Reset	BACnetDatetime	-	O	-
Elapsed_Active_Time	Unsigned	-	O	-
Time_Of_Active_Time_Reset	BACnetDatetime	-	O	-
Time_Delay	Unsigned	-	O	-
Notification_Class	Unsigned	-	O	-
Alarm_Value	BACnetBinaryPV	-	O	-
Event_Enable	BACnetEventTransitionBits	-	O	-
Acked_Transitions	BACnetEventTransitionBits	-	O	-
Notify_Type	BACnetNotifyType	-	O	-
Event_Time_Stamps	BACnetArray[N] of BACnetTimeStamp	-	O	-
Profile_Name	CharacterString	-	O	-
Units	BACnetEngineeringUnits	No units (95)	R	R
COV_Increment	REAL	0	O	W

© HMS Industrial Networks S.L.U - All rights reserved
This information is subject to change without notice

5.4 Considerations on Temperature Objects

We can distinguish two different controls, depending on the header/follower setting of the INBACPAN001R100.

5.4.1 INBACPAN001R100 set as a **header**:

- **Setpoint_command (Analog Output Object Type)**
  This is the adjustable temperature setpoint value that must be required by the user.

  Present value can be read or written.

- **RoomTemperature_status (Analog Input Object Type)**
  This object reports the temperature that is currently used by the Panasonic indoor unit as the reference of its own control loop. Depending on the configuration of the indoor unit, this value can be the temperature reported by the sensor on the return path of the Panasonic indoor unit or the sensor of its remote controller.

  Present value can be read only.

- **RoomTemperature_command (Analog Output Object Type)**
  This object allows us to provide an external temperature's sensor from the BACnet side. This is possible by setting INBACPAN001R100 as a header.

- **Setpoint_status (Analog Input Object Type)**
  This register will show the real temperature sent to the indoor unit. It is the temperature that the AC unit is applying as a setpoint. Its value will be the same that **Setpoint_command** or the value sent by different means (IR remote, wall-mounted remote, etc.).

  Present value can be read only.

5.4.2 INBACPAN001R100 set as a **follower**:

- **Setpoint_command (Analog Output Object Type)**
  This is the adjustable temperature setpoint value that must be required by the user.

  Present value can be read or written.

  A remote controller connected to the Panasonic indoor unit will report the same temperature setpoint value set in this object. This will apply when no AC unit's external reference temperature is provided from INBACPAN001R100 (see details below).

- **RoomTemperature_status (Analog Input Object Type)**
  This object reports the temperature that is currently used by the Panasonic indoor unit as the reference of its own control loop. Depending on the configuration of the indoor unit, this value can be the temperature reported by the sensor on the return path of the Panasonic indoor unit or the sensor of its remote controller.

  Present value can be read only.

- **RoomTemperature_command (Analog Output Object Type)**
  This object allows us to provide an external temperature's sensor from the BACnet side. Panasonic indoor unit does not allow, on devices like INBACPAN001R100 working as slaves, to provide directly a temperature to be used as a reference of the control loop of the AC indoor unit. To overcome this limitation and enable the usage of an external temperature sensor, INBACPAN001R100 applies the following mechanism called "Virtual Temperature:

  - After receiving ***RoomTemperature_command*** and ***Setpoint_command***, INBACPAN001R100 is going to estimate the appropriate temperature setpoint.

Example. If a **Setpoint_command = 22ºC**, and **RoomTemperature_command = 20ºC** are received, INBACPAN001R100 will assume that the user is demanding a **+2ºC** increase in temperature.

© HMS Industrial Networks S.L.U - All rights reserved
This information is subject to change without notice

- By knowing at any time, the reference temperature currently used by the indoor unit (the return temperature), INBACPAN001R100 can calculate the required temperature setpoint needed to apply the decrease/increase on the real temperature and reach the temperature chosen by the user.

Following the example above, if INBACPAN001R100 reads a **RoomTemperature_command** = **24ºC** in the indoor unit, it will apply a final setpoint of **24ºC + 2ºC = 26ºC.**

- At this moment, every time that INBACPAN001R100 detects a change on the ambient temperature reported by the indoor unit, it will also change the required setpoint to keep the temperature required by the user at any time.

If we follow the example, if INBACPAN001R100 receives a new temperature value coming from the indoor unit of **25ºC**, INBACPAN001R100 will automatically adjust the temperature setpoint required of the AC indoor unit to **25ºC + 2ºC = 27ºC**.

- In general, INBACPAN001R100 is constantly applying the "Virtual Temperature" formula:

$$S_{AC} = S_u - (T_u - T_{AC})$$

Where:
S_{AC} - setpoint value currently applied to the indoor unit
S_u - setpoint value
T_u - external temperature reference written at BACnet side
T_{AC} - ambient temperature that the indoor unit is using as the reference of its own control loop

When INBACPAN001R100 detects a change in any of the values of {S_u, T_u, T_{AC}}, it will send the new setpoint (S_{AC}) to the indoor unit.

- After a device booting, Present value for **RoomTemperature_command** has a value 0 and the property "Realibility" is dislayed as *Unreliable Other* (7). This "Realibility" status means that no external temperature reference has being provided to the object, so the system is not applying the Virtual temperature function. However, after receiving the first value, "Realibility" wil change into *Nofault Detected (0).* After that, any value can be used in the temperature range, including 0.

- **Setpoint_status (Analog Input Object Type)**
- This register will show the real temperature sent to the indoor unit. It is the temperature that the AC unit is applying as a setpoint. Its behavior depends on virtual temperature function:
  - If virtual temperature in not in use, its value will be the same that **Setpoint_command** or the one sent by different means (IR remote, wall-mounted remote, etc.).
  - If virtual temperature is being used, the value will be the real setpoint modified by this function according to the formula explained above.

Present value can be read only.

Moreover, notice that temperature's values of all these four objects are expressed according to the temperature´s format configured through its onboard DIP-Switches (See 6 CONNECTIONS AND SWITCHES). The following formats are possible:

- **Celsius value**: Value in BACnet object is the temperature value in Celsius (i.e. a value "22" in the BACnet object must be interpreted as 22ºC).

- **Fahrenheit value**: Value in BACnet object is the temperature value in Fahrenheit (i.e. a value "72" in the BACnet object must be interpreted as 72ºF (~22ºC).

© HMS Industrial Networks S.L.U - All rights reserved
This information is subject to change without notice

6 Connections and switches

6.1 Connect to the Remote Controller bus

Disconnect mains power from the AC unit.

Connect the interface to R1 R2 bus in any point of the bus. The R1 R2 bus is a two-wires bus that connects the AC indoor unit with the wired remote controller. You can find the R1 R2 terminals in the indoor unit. This R1 R2 connection has no specific polarity.

⚠ ***Important***: Remember that switch changes are only applied after an Intesis power cycle.

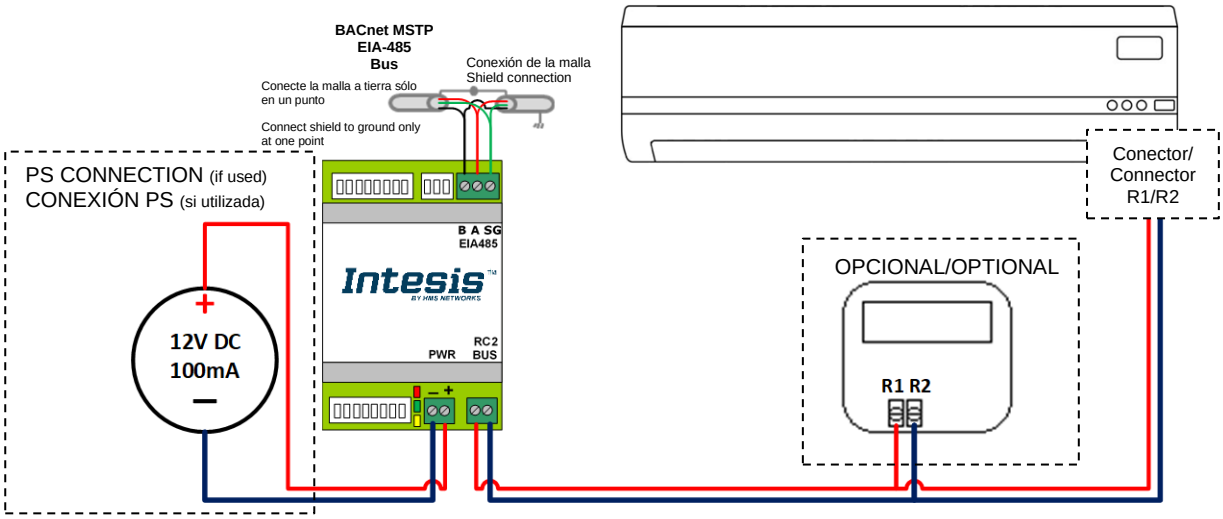

Figure 2.2 Connection diagram

SW1 – Device and AC settings

Binary value b1…b5	Switches 1 2 3 4 5 6 7 8	Description
0xxxxxxx	↓ x x x x x x x	Follower (Default value) (valor por defecto - default value)
1xxxxxxx	↑ x x x x x x x	Header
x0xxxxxx	x ↓ x x x x x x	Outdoor demand rate deactivated
x0xxxxxx	x ↑ x x x x x x	Outdoor demand rate activated (valor por defecto - default value)
xx0xxxxx	x x ↓ x x x x x	Not used
xx1xxxxx	x x ↑ x x x x x	Not used
xxx0xxxx	x x x ↓ x x x x	Not used
xxx1xxxx	x x x ↑ x x x x	Not used
xxxx0xxx	x x x x ↓ x x x	Low Power Mode
xxxx1xxx	x x x x ↑ x x x	High Performance mode (valor por defecto - default value)

⚠ ***Important***: *This switch determines the performance and consumption of the device. Running in **High Performance Mode** means maximum consumption and maximun device performance. However, in very specific installations (AC bus shared with a wired remote controller together with wiring distances from AC to devices and low supply allowed by some AC in connection port) AC port consumption may be exceeded. In this case, it is possible to decrease device consumption by changing into **Low Power Mode**.*

SW2 – Temperature magnitude (ºC/ºF)

Binary value b_0…b_1	*Switches* 1 2 3 4 5 6 7 8	Description
xxxxxxx0	x x x x x x x ↓	Temperature values in Bacnet are represented in Celsius degrees (Default value)
xxxxxxx1	x x x x x x x ↑	Temperature values in Bacnet are represented in Fahrenheit degrees

© HMS Industrial Networks S.L.U - All rights reserved
This information is subject to change without notice

6.2 Connect to BACnet MS/TP

Connect the EIA485 bus wires to the plug-in terminal block (EIA485) of INBACPAN001R100; respect the polarity on this connection (A+ and B-).

Connect the ground signal to the plug-in terminal block (SG).

Respect the maximum distance of 1.200 meters for the bus, no loop or star topologies are allowed for EIA485 bus.

EIA-485 bus. Termination resistors and Fail-Safe Biasing mechanism

EIA-485 bus requires a 120Ω terminator resistor at each end of the bus to avoid signal reflections.

In order to prevent fail status detections by the receivers, which are *"listening"* to the bus, when all the transmitters' outputs are in three-state (high impedance), a fail-safe biasing mechanism is required. This mechanism provides a safe status (a correct voltage level) in the bus when all the transmitters' outputs are in three-state.

The INBACPAN001R100 gateway includes an on-board terminator resistor of 120Ω that can be connected to the EIA-485 bus by using DIP-switch **SW3**.

Some BACnet MS/TP EIA-485 Master devices can provide also internal 120Ω terminator resistor and/or fail-safe biasing. Check the technical documentation of the Master device connected to the EIA-485 network in each case.

SW3 settings

Binary value $b_2...b_0$	Switches 1 2 3	Description
0xx	↓ x x	EIA485 bus without termination resistor. The gateway is not at one end of the EIA485 bus (default value)
1xx	↑ x x	120 Ω termination resistor active. The gateway is at one end of the EIA485 bus
x00	x ↓ ↓	No bus polarization (Default value)
x11	x ↑ ↑	Bus polarization active

Please, check configuration on **SW1** and **SW2** before connecting to BACnet MS/TP.

6.2.1 MS/TP MAC address switch configuration

MAC address can be configured using switch **SW2**

Binary value $b_0...b_7$	*Switches* 1	2	3	4	5	6	7	8	MAC address
0000000x	↓	↓	↓	↓	↓	↓	↓	x	0 (Default value)
1000000x	↑	↓	↓	↓	↓	↓	↓	x	1
0100000x	↓	↑	↓	↓	↓	↓	↓	x	2
1100000x	↑	↑	↓	↓	↓	↓	↓	x	3
….	….								…
1011111x	↑	↓	↑	↑	↑	↑	↑	x	125
0111111x	↓	↑	↑	↑	↑	↑	↑	x	126
1111111x	↑	↑	↑	↑	↑	↑	↑	x	127

The MAC address selected my affect on the Device Instance. If the "Auto Device Instance" is used, keep in mind that the Device Instance will be build using the "Device Instance Base" + the address selected in SWP2 P1-P7. Please, check section 5.3.1 PANASONIC AC GATEWAY (DEVICE OBJECT TYPE) for more information.

© HMS Industrial Networks S.L.U - All rights reserved
This information is subject to change without notice

6.2.2 BACnet MS/TP baudrate

Select the right baudrate for BACnet MS/TP communication using switch **SW1**.

Binary value $b_5 \ldots b_4$	Switches 1 2 3 4 5 6 7 8	Description
xxxxx000	x x x x x ↓ ↓ ↓	Autobaudrate (default value) *
xxxxx100	x x x x x ↑ ↓ ↓	9600 bps
xxxxx010	x x x x x ↓ ↑ ↓	192000 bps
xxxxx110	x x x x x ↑ ↑ ↓	38400 bps
xxxxx001	x x x x x ↓ ↓ ↑	57600 bps
xxxxx101	x x x x x ↑ ↓ ↑	76800 bps
xxxxx011	x x x x x ↓ ↑ ↑	115200 bps
xxxxx111	x x x x x ↑ ↑ ↑	Autobaudrate *

* Note: If Autobaudrate is selected, the INBACPAN001R100 will look for another BACnet MS/TP device with a fixed baudrate to match this value. Once detected, the baudrate will not be modified until a device reset is produced.

© HMS Industrial Networks S.L.U - All rights reserved
This information is subject to change without notice

7 Set-up process and troubleshooting

7.1 Pre-requisites

For a BACnet MS/TP integration, it is necessary to have the BACnet MS/TP Master device operative and well connected to the BACnet MS/TP port of the INBACPAN001R100.

Items supplied by HMS Networks for this integration are:

- Intesis INBACPAN001R100 interface with Panasonic AC external protocol firmware loaded.
- Product documentation.

7.2 Physical checking

First point to check are the gateway physical connections:

1.- Make sure that the gateway is correctly connected to the AC unit.

2.- Check that the AC unit is connected to mains.

3.- Check the EIA485 connection from the gateway to the BACnet MS/TP. Remember to verify polarity and terminal resistors configuration.

7.3 LED status

There are three leds at the bottom of the device. On start up, all leds blink once and then turn off. After that booting, LED status will be updated.

Please, check the table below for more information:

LED	Status	Description
L1 (red)	ON Steady	BACnet MS/TP link
	Blinking	Activity on the BACnet MS/TP bus
	Flashing	BACnet MS/TP link not performed
L2 (green)	ON Steady	Communication error
	Blinking	AC Error
	OFF	Communication OK
L3 (yellow)	ON steady	External power supply connected
	OFF	External PS not connected

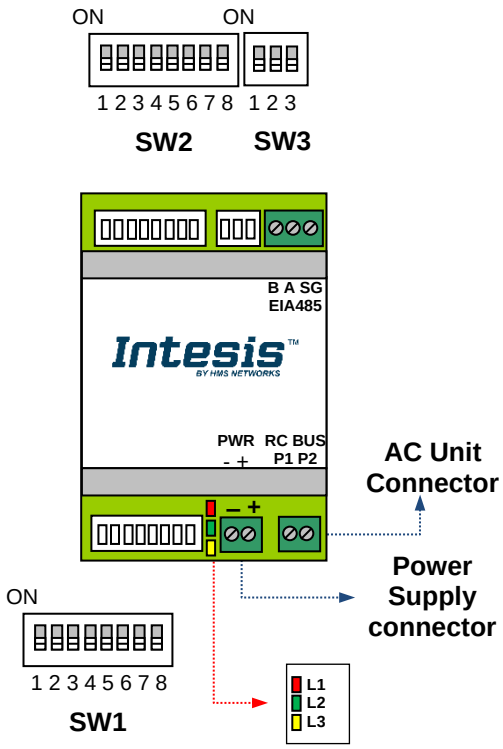

© HMS Industrial Networks S.L.U - All rights reserved
This information is subject to change without notice

7.4 Occupancy

Each indoor unit has its own occupancy signal. Remember that this signal needs to be feed by an external sensor which indicates if there is presense or not (occupancy). This signal is processed directly in the INBACPAN001R100.

When occupancy mode is active, according to current room temperature it will set the mode, setpoint and on/off, for example:

- Room Temperature > OCS: Setpoint = OCS, Mode = Cool, On/Off = On
- Room Temperature < OHS: Setpoint = OHS, Mode = Heat, On/Off = On
- OCS < Room Temperature > OHS: Setpoint = OCS/OHS depending on current mode (if Fan or Dry mode is active => no setpoint is sent), On/Off = On

When unoccupancy mode is active, according to current room temperature it will set the mode, setpoint and on/off, for example:

- Room Temperature > UCS: Setpoint = UCS, Mode = Cool, On/Off = On
- Room Temperature < UHS: Setpoint = UHS, Mode = Heat, On/Off = On
- UCS < Room Temperature > UHS: Setpoint = UCS/UHS depending on current mode (if Fan or Dry mode is active => no setpoint is sent), On/Off = On (if Unoccupancy Deadband Action is = 1)

These checks will be done each time the indoor unit occupancy status is changed, and if ***check continuously*** checkbox is checked, also each time the room temperature changes.

The configuration set on the occupany signals is applied from the very first moment the occupancy signal is enabled until the user changes the setpoint, mode or the On/Off signal, which disables occupancy functionality.

The minimum difference between Cool and Heat SetPoints must be 2ºC/4ºF.

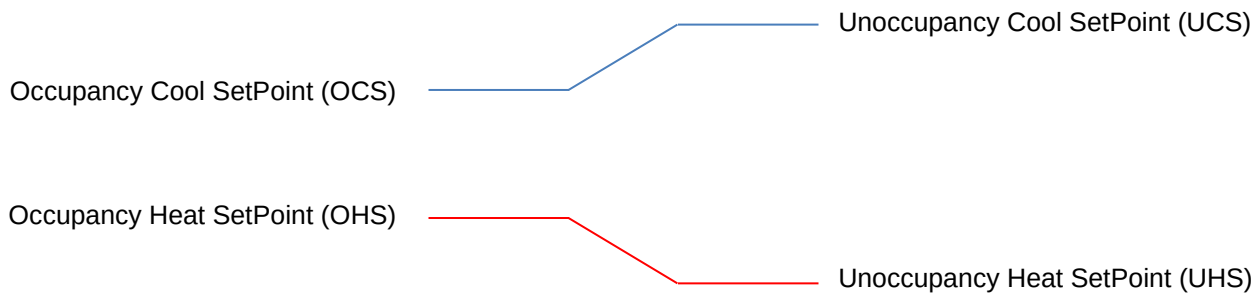

© HMS Industrial Networks S.L.U - All rights reserved
This information is subject to change without notice

8 Restore factory Settings

8.1 Restore factory Settings

To restore device factory settings, it is necessary to complete the following process:

1. Set **SW1** and **SW2** DIP switches to ON position.
2. Reset the device performing a POWER OFF and a POWER ON.
3. After booting, the leds (green+red+yellow) should be blinking in S.O.S morse sequence.
4. At this moment, a 30 seconds countdown will start to set all SW1 and SW2 switches to OFF position.
5. By completing these previous steps, the device will be restored to Factory Settings.

To continue working with the device, remember to proceed as usual:
1. Set again switches to reach user desired configuration
2. Reset the device (POWER OFF + POWER ON).

© HMS Industrial Networks S.L.U - All rights reserved
This information is subject to change without notice

9 AC Unit Types compatibility

Please, check compatibility list at to know which Panasonic units are compatible with our gateway.

https://www.intesis.com/docs/compatibilities/inxxxpan001rx00_compatibility

© HMS Industrial Networks S.L.U - All rights reserved
This information is subject to change without notice

10 Mechanical & electrical characteristics

Enclosure	Plastic, type PC (UL 94 V-0) Net dimensions (dxwxh): 93 x 53 x 58 mm / 3.7” x 2.1” x 2.3” Color: Light Grey. RAL 7035	Operation Temperature	0ºC to +70ºC
Weight	85 g.	Stock Temperature	-20ºC to +85ºC
Mounting	• Wall • DIN rail EN60715 TH35.	Operational Humidity	Between 5% to 95% RH, with no condensation
Terminal Wiring (for low-voltage signals)	For terminal: solid wires or stranded wires (twisted or with ferrule) 1 core: 0.5mm^2… 2.5mm^2 2 cores: 0.5mm^2… 1.5mm^2 3 cores: not allowed	Stock Humidity	<95% RH, with no condensation
BACnet MS/TP port	1 x EIA485 Plug-in screw terminal block (2 poles + GND) with 120 Ω resistor termination and polatization selectable by switch.	Isolation voltage	1500 VDC
AC unit port	1 x RC2 connector	Isolation resistance	1000 MΩ
Switch 1 (SW1)	1 x DIP-Switch for Air Conditioner Unit + Bacnet baud rate	Protection	IP20
Switch 2 (SW2)	1 x DIP-Switch for Bacnet MAC address + temperature magnitude (ºC/ºF).	LED indicators	3 x Onboard LED - Operational status
Switch 3 (SW3)	1 x Polarization and termination resistor		

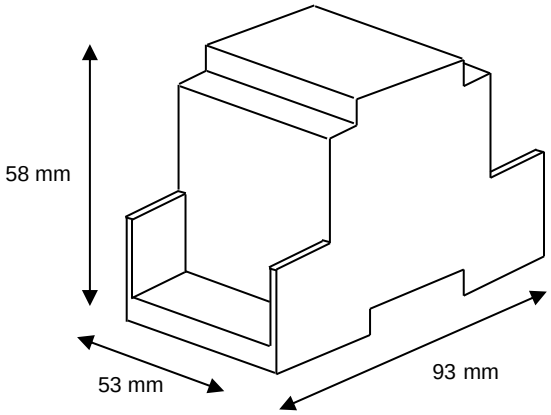

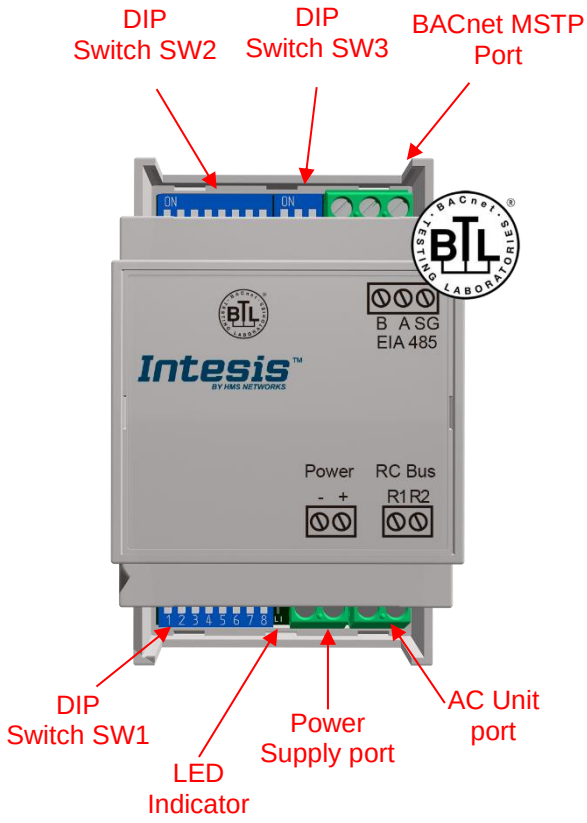

© HMS Industrial Networks S.L.U - All rights reserved
This information is subject to change without notice

11 Error codes

Below you can find a list of error codes from Panasonic air conditioning system.

ErrorCode	Error CodeM	Error in RC	Error Category	Error Description
0	N/A	N/A	INBACPAN001R100	No active error
01	A01	A01	GHP Engine Issues	GHP - Engine oil pressure fault
02	A02	A02		GHP - Engine oil level fault
03	A03	A03		GHP - Engine over speed
04	A04	A04		GHP - Engine under speed
05	A05	A05		GHP - Ignition power supply failure
06	A06	A06		GHP - Engine start up failure
07	A07	A07		GHP - Fuel gas valve failure
08	A08	A08		GHP - Engine stalled
09	A09	A09		GHP - Engine overload
0A	A10	A10		GHP - High exhaust gas temp
0B	A11	A11		GHP - Engine oil level failure
0C	A12	A12		GHP - Throttle actuator fault
0D	A13	A13		GHP - Fuel gas valve adjustment failure
0E	A14	A14		GHP - Engine oil pressure sensor fault
0F	A15	A15		GHP - Starter power output short circuit
10	A16	A16		GHP - Starter motor locked
11	A17	A17		GHP - Starter current (CT) coil failed
13	A19	A19		GHP - Wax Valve (3 Way) fault
14	A20	A20		GHP - Cooling water temp high
15	A21	A21		GHP - Cooling water level fault
16	A22	A22		GHP - Cooling water pump fault
17	A23	A23		GHP - Engine crank angle sensor failure
18	A24	A24		GHP - Engine cam angle sensor failure
19	A25	A25		GHP - Clutch fault
1A	A26	A26		GHP - Misfire
1B	A27	A27		GHP - Catalyst temperature fault
1C	A28	A28		GHP - Generator fault
1D	A29	A29		GHP - Converter fault
1E	A30	A30		GHP - Fuel gas pressure low
21	C01	C01	Central Controller Issues	Duplicated setting of control address
22	C02	C02		Central control number of units mis-matched
23	C03	C03		Incorrect wiring of central control

© HMS Industrial Networks S.L.U - All rights reserved
This information is subject to change without notice

24	C04	C04		Incorrect connection of central control
25	C05	C05		System Controller fault, error in transmitting comms signal, i/door or o/door unit not working, wiring fault
26	C06	C06		System Controller fault, error in receiving comms signal, i/door or o/door unit not working, wiring fault, CN1 not connected correctly
2C	C12	C12		Batch alarm by local controller
30	C16	C16		Transmission error from adaptor to unit
31	C17	C17		Reception error to adaptor from unit
32	C18	C18		Duplicate central address in adaptor
33	C19	C19		Duplicate adaptor address
34	C20	C20		Mix of PAC & GHP type units on adaptor
35	C21	C21		Memory fault in adaptor
36	C22	C22		Incorrect address setting in adaptor
37	C23	C23		Host terminal software failure
38	C24	C24		Host terminal hardware failure
39	C25	C25		Host terminal processing failure
3A	C26	C26		Host terminal communication failure
3C	C28	C28		Reception error of S-DDC from host terminal
3D	C29	C29		Initialization failure of S-DDC
3F	C31	C31		Configuration change detected by adaptor
41	E01	E01	Addressing and Communication Problems	Remote control detecting error from indoor unit, Address not set/Auto address failed. Check interconnecting wiring etc. Re-address system.
42	E02	E02		Remote detecting error from indoor unit,
43	E03	E03		Indoor unit detecting error from remote,
44	E04	E04		Indoor seeing error from outdoor. Qty of i/d units connected are less than qty set. Check; all i/d units are ON, reset turn off all units wait 5min power up
45	E05	E05		Indoor unit detecting error from outdoor unit, Error in sending comms signal
46	E06	E06		Outdoor unit detecting error from indoor unit, Error in receiving comms signal
47	E07	E07		Outdoor unit detecting error from indoor unit, Error in sending comms signal
48	E08	E08		Incorrect setting indoor/controller, Indoor address duplicated
49	E09	E09		Incorrect setting indoor/controller, Remote address duplicated or IR wireless controller not disabled
4A	E10	E10		Indoor unit detecting error from 'option' plug, Error in sending comms signal
4B	E11	E11		Indoor unit detecting error from 'option' plug, Error in receiving comms signal
4C	E12	E12		Auto addressing failed, Auto address connector CN100 shorted during auto addressing

© HMS Industrial Networks S.L.U - All rights reserved
This information is subject to change without notice

4D	E13	E13		Indoor unit failed to send signal to remote controller
4E	E14	E14		Setting Failure, Duplication of master indoor units
4F	E15	E15		Auto addressing failed, Number of indoor units connected are less than number set
50	E16	E16		Auto addressing failed, Number of indoor units connected are more than number set
51	E17	E17		Group control wiring error, Main indoor unit not sending signal for sub indoor units
52	E18	E18		Group control wiring error, Main indoor unit not receiving signal for sub indoor units
54	E20	E20		Auto addressing failed, No indoor units connected
58	E24	E24		Auto addressing failed, Error on sub outdoor unit
59	E25	E25		Auto addressing failed, Error on outdoor unit address setting
5A	E26	E26		Auto addressing failed, Quantity of main and sub outdoor units do not correspond to the number set on main outdoor unit P.C.B.
5D	E29	E29		Auto addressing failed, Sub outdoor unit not receiving comms for main outdoor unit
5F	E31	E31		Between units, Comms failure with MDC, does E31 remain after power is re-instated? If so replace PCB. & power PCB
61	F01	F01	Sensor Faults	Indoor Heat Exch inlet temp sensor failure (E1)
62	F02	F02		Indoor Heat Exch freeze temp sensor failure (E2)
63	F03	F03		Indoor Heat Exch outlet temp sensor failure (E3)
64	F04	F04		Outdoor Discharge temp sensor failure (TD) or (DISCH1)
65	F05	F05		Outdoor Discharge temp sensor failure (DISCH2)
66	F06	F06		Outdoor Heat Exch temp sensor failure (C1) or (EXG1)
67	F07	F07		Outdoor Heat Exch temp sensor failure (C2) or (EXL1)
68	F08	F08		Outdoor Air temp sensor failure (TO)
6A	F10	F10		Indoor inlet temp sensor failure
6B	F11	F11		Indoor outlet temp sensor failure
6C	F12	F12		Outdoor Intake sensor failure (TS)
6D	F13	F13		GHP - Cooling water temperature sensor failure
70	F16	F16		Outdoor High pressure sensor failure
71	F17	F17		GHP - Cooling water temperature sensor fault
72	F18	F18		GHP - Exhaust gas temperature sensor fault
74	F20	F20		GHP Clutch coil temperature fault
77	F23	F23		Outdoor Heat Exch temp sensor failure (EXG2)
78	F24	F24		Outdoor Heat Exch temp sensor failure (EXL2)
7D	F29	F29		Indoor EEPROM error

© HMS Industrial Networks S.L.U - All rights reserved
This information is subject to change without notice

7E	F30	F30		Clock Function (RTC) fault
7F	F31	F31		Outdoor EEPROM error
81	H01	H01	Compressor Issues	Compressor Fault, Over current (Comp1)
82	H02	H02		Compressor Fault, Locked rota current detected (Comp1)
83	H03	H03		Compressor Fault, No current detected (Comp1)
85	H05	H05		Compressor Fault, Discharge temp not detected (Comp1)
86	H06	H06		Compressor Fault, Low Pressure trip
87	H07	H07		Compressor Fault, Low oil level
88	H08	H08		Compressor Fault, Oil sensor Fault (Comp1)
8B	H11	H11		Compressor Fault, Over current (Comp2)
8C	H12	H12		Compressor Fault, Locked rota current detected (Comp2)
8D	H13	H13		Compressor Fault, No current detected (Comp2)
8F	H15	H15		Compressor Fault, Discharge temp not detected (Comp2)
95	H21	H21		Compressor Fault, Over current (Comp3)
96	H22	H22		Compressor Fault, Locked rota current detected (Comp3)
97	H23	H23		Compressor Fault, No current detected (Comp3)
99	H25	H25		Compressor Fault, Discharge temp not detected (Comp3)
9B	H27	H27		Compressor Fault, Oil sensor fault (Comp2)
9C	H28	H28		Compressor Fault. Oil sensor (connection failure)
9F	H31	H31		Compressor Fault. IPM trip (IMP current on temperature)
C1	L01	L01	Incorrect Settings	Setting Error, Indoor unit group setting error
C2	L02	L02		Setting Error, Indoor/outdoor unit type/model miss-matched
C3	L03	L03		Duplication of main indoor unit address in group control
C4	L04	L04		Duplication of outdoor unit system address
C5	L05	L05		2 or more controllers have been set as 'priority' in one system - shown on controllers set as 'priority'
C6	L06	L06		2 or more controllers have been set as 'priority' in one system - shown on controllers not set as 'priority'
C7	L07	L07		Group wiring connected on and individual indoor unit
C8	L08	L08		Indoor unit address/group not set
C9	L09	L09		Indoor unit capacity code not set
CA	L10	L10		Outdoor unit capacity code not set
CB	L11	L11		Group control wiring incorrect
CD	L13	L13		Indoor unit type setting error, capacity

© HMS Industrial Networks S.L.U - All rights reserved
This information is subject to change without notice

CF	L15	L15		Indoor unit paring fault
D0	L16	L16		Water heat exch unit setting failure
D1	L17	L17		Miss-match of outdoor unit with different refrigerant
D2	L18	L18		4-way valve failure
D3	L19	L19		Water heat exch unit duplicated address
D5	L21	L21		Gas type setup failure
D9	L25	L25		Indoor unit, hydrokit model, Unmatched remote controller
E1	P01	P01	Indoor Unit Problems	Indoor unit fault, Fan motor thermal overload
E2	P02	P02		Outdoor unit fault, Compressor motor thermal overload, over or under voltage
E3	P03	P03		Outdoor unit fault, Compressor discharge temperature too high (Comp1) over 111 ºC. Low on ref gas, exp valve, pipework damage.
E4	P04	P04		Outdoor unit fault, High pressure trip
E5	P05	P05		Outdoor unit fault, Open phase on power supply. Check power on each phase, inverter pcb, control pcb
E7	P07	P07		Indoor unit, hydrokit model, Abnormal internal heater overload
E9	P09	P09		Indoor unit fault, air-to-air unit: Ceiling panel incorrectly wired, hydrokit model: Abnormal water flow
EA	P10	P10		Indoor unit fault, Condensate float switch opened
EB	P11	P11		Air-to-water indoor unit low temp (frost protection) fault
EC	P12	P12		Indoor unit fault, air-to-air unit: Fan DC motor fault, hydrokit model: Abnormal water pump speed
EE	P14	P14		Input from leak detector (If fitted)
EF	P15	P15		Refrigerant loss, high discharge temp and EEV wide open and low compressor current draw.
F0	P16	P16		Outdoor unit fault, Open phase on compressor power supply
F1	P17	P17		Outdoor unit fault, Compressor discharge temperature too high (Comp2) over 111 degC. Low on ref gas, exp valve, pipework damage.
F2	P18	P18		Outdoor unit fault, By-pass valve failure
F3	P19	P19		Outdoor unit fault, 4 way valve failure, i/door temp rises in cooling or fills in heating. Check wiring, coil, pcb output, valve operation.
F4	P20	P20		Ref gas, high temp/pressure fault, heat exch temp high C2, 55-60 degC, cooling over-load, sensor fault.
F6	P22	P22		Outdoor unit fan motor fault, fan blade jammed, check connections, does fan turn freely, motor resistance 30-40ohm on each pair, no fan fault, yes pcb fault.
F7	P23	P23		Air-to-water interlock warning, within 30 seconds after the water pump start command, the interlock

© HMS Industrial Networks S.L.U - All rights reserved
This information is subject to change without notice

				does not turn ON or the interlock turns OFF during water pump operation (interlock signal by flow switch and/or differential pressure switch, depending on the model)
FA	P26	P26		Outdoor unit fault, Compressor overcurrent - check winding resistance, Inverter failure - check internal resistance term HIC + & - to UVW 200-300Kohm or more
FC	P29	P29		Outdoor unit fault, Inverter circuit fault - Motor-current Detection Circuit (MDC) fault, check comp windings, sensors C1 & TS, if ok possible pcb failure.
FD	P30	P30		Indoor unit fault, System controller detected fault on sub indoor unit
FF	P31	P31		Simultaneous operation multi control fault, Group controller fault
65535 (-1)	N/A	N/A	INBACPAN001R100	Error in the communication of INBACPAN001R100 device with the AC unit

In case you detect an error code not listed, contact your nearest Panasonic technical support service for more information on the error meaning.

© HMS Industrial Networks S.L.U - All rights reserved
This information is subject to change without notice