LonWorks TP/FT-10 to BACnet/IP & MS/TP Server Gateway

Item number: INBACLON3K00000

Integrate any LON device or installation with a BACnet BMS or any BACnet/IP or BACnet MS/TP controller. This integration aims to make LON devices, their network variables (SNVT), and resources accessible from a BACnet-based control system or device as if they were a part of the BACnet system and vice versa.

Discontinued with no replacement available

Features and benefits

- **Support for both BACnet/IP and BACnet MS/TP**
  The gateway supports both BACnet/IP and BACnet MS/TP protocols.
- **Commissioning-friendly approach with Intesis MAPS**
  Templates can be imported and reused as often as needed, significantly reducing commissioning time.
- **Configuration through IP (Console) port**
  Configuration can be carried out through the gateway's IP (Console) port.
- **Can be configured to Modbus TCP instead of BACnet**
  The gateway is highly versatile, as it can be configured to work with Modbus TCP instead of BACnet.
- **Easy integration with Intesis MAPS**
  The integration process is quickly and easily managed using the Intesis MAPS configuration tool.
- **Configuration tool and gateway automatic updates**
  Both the Intesis MAPS configuration tool and the gateway's firmware can receive automatic updates.
- **Support for LonWorks TP/FT-10 devices**
  The gateway supports LonWorks TP/FT-10 (twisted pair free topology at 78 kbps) devices.
- **Control up to 3000 SNVT / UNVT LonWorks variables**
  Up to 3000 SNVT/UNVT LonWorks variables can be controlled by the gateway.

14 rue Edouard Petit
42000 St-Etienne
Tel : +33 477 92 03 56
Email : contact@rg2i.com
www.rg2i.com

LonWorks TP/FT-10 to BACnet/IP & MS/TP Server Gateway

General

Capacity	Up to 3000 points
Net Width (mm)	88
Net Height (mm)	90
Net Depth (mm)	58
Net Weight (g)	194
Packed Width (mm)	125
Packed Height (mm)	85
Packed Depth (mm)	140
Packed Weight (g)	356
Operating Temperature °C Min	0º
Operating Temperature °C Max	60º
Storage Temperature °C Min	-30
Storage Temperature °C Max	60
Power Consumption (W)	1.7
Input Voltage (V)	9 to 36VDC +/-10%, Max.: 140mA.
Power Connector	3-pole
Configuration	Intesis MAPS
Installation Conditions	This gateway is designed to be mounted inside an enclosure. If the unit is mounted outside an enclosure, precautions should always be taken to prevent electrostatic discharge to the unit. When working inside an enclosure (e.g., making adjustments, setting switches, etc.), typical anti-static precautions should always be followed before touching the unit.
Content of Delivery	Intesis gateway, installation manual and USB configuration cable.

LonWorks TP/FT-10 to BACnet/IP & MS/TP Server Gateway

General

Not Included (in delivery)	Power supply not included.
Mounting	DIN rail mount (bracket included)
Housing Materials	Plastic
Warranty (years)	3 years
Packaging Material	Cardboard

Identification and Status

Product ID	INBACLON3K00000
Country of Origin	Spain
HS Code	8517620000
Dual Usage	No
Export Control Classification Number (ECCN) (Applies only to the U.S)	EAR99

Physical Features

Connectors / Input / Output	Power supply, LON TP/FT-10, Ethernet, Console port USB, USB storage, EIA-485.
LED Indicators	Gateway and communication status.
DIP & Rotary Switches	EIA-485 serial port configuration.
Contains Battery	Yes
Battery Description	Manganese Dioxide Lithium button battery.

Certifications and Standards

Product Certifications	CE, CB, UKPSTI, UL, KC, BTL
WEEE Category	IT and telecommunications equipment

Use Case

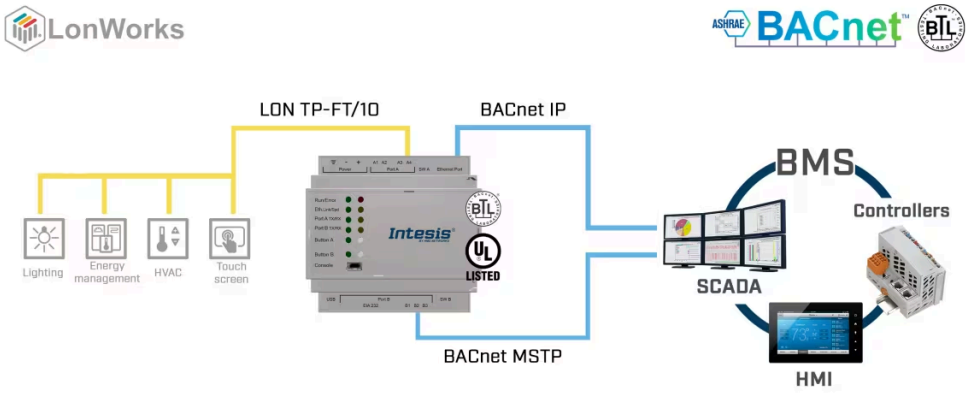

Integration example.